CKD

Pneumatic,Vacuum and Auxiliary Components

F.R.L. unit | Speed controller | Silencer
Fittings/tubes | Air unit | Precision components
Sensors | Total air systems | Main line unit

Vol. 9

Ver.2

Catalog No. CB-024SA-9



Guide to CKD Components General Catalog

CKD offers a wide variety of products
to meet your various needs.
Select the ideal product
according to your application.

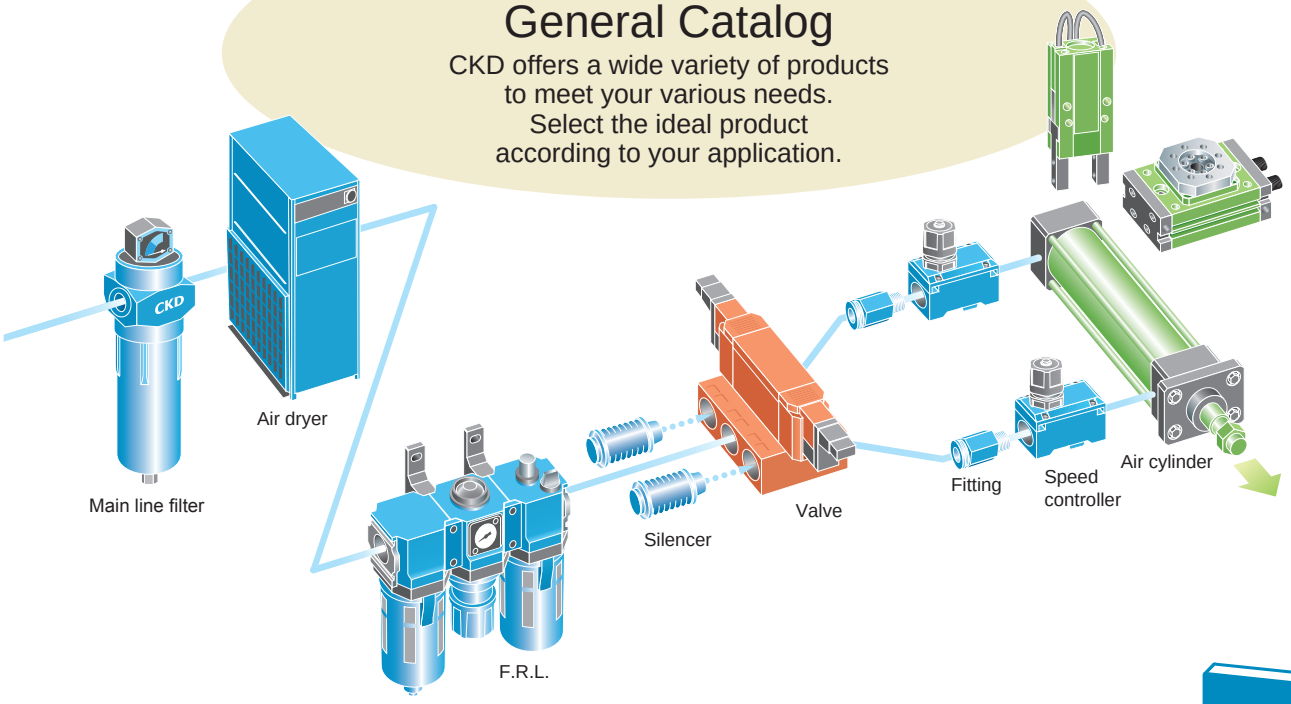

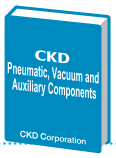

Pneumatic, Vacuum and Auxiliary Components

F.R.L. units
Modular design (F.R.L.)
Drain separator
Anti-bacterial / bacteria-removing filter
Compact regulator / Filter regulator
Large bore size filter / Regulator
Precision regulator
Mechanical pressure switch
Residual pressure exhaust valve
Adapter/joiner
Pressure gauge
Vacuum filter / Regulator
Clean filter / Regulator
Electro pneumatic regulator



Pneumatic auxiliary components
Speed controller
Silencer
Auxiliary valve
Fitting/tube
Air blow nozzle



Air unit components
Clean air unit
Air unit

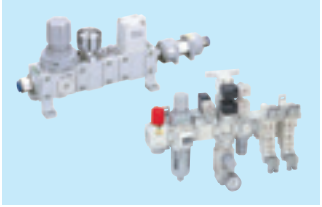

Precision components
Glass float module
Precise suction plate
Magnetic spring buffer

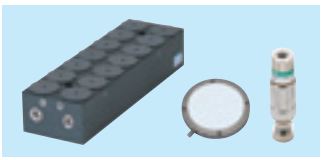

Pressure sensors
Electronic pressure switch
Contact/close contact check/ cutting tool breakage detection switch
Air sensor
Pressure switch for coolant

Sensor/controller components
Gas flow sensor
Gas flow controllers
Water flow rate sensor



Total air systems
Total air system (detector/circuit device)
γ system (PLC components/ signal control components)



Gas generator
Nitrogen gas extraction unit
Oxygen concentration monitor



Main line units
Air dryer
High polymer membrane Air dryer unit
Main line filter
Drain discharger



● Catalogs for chemical liquids for semiconductors and valves for process gases are also available.

Pneumatic Cylinders Ⅰ and Ⅱ

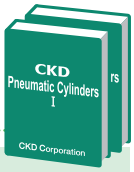

Pneumatic Cylinders Ⅰ

- Standard
- With valve
- Space saving structure
- Rodless type
- Related products
  - Shock absorber
  - Free joint
  - Simplified floating joint
  - Speed controller
- Cylinder switches

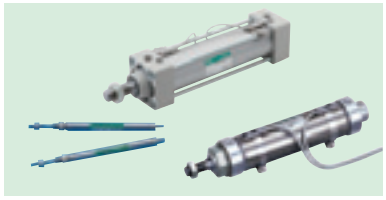
Standard


Space saving structure

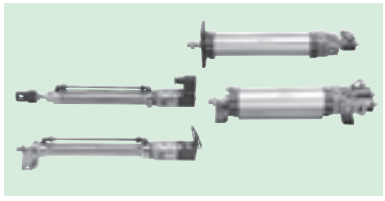
With valve

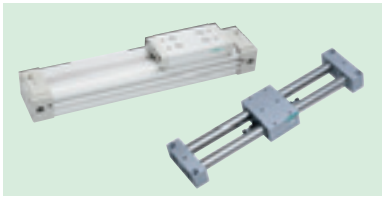
Rodless

Pneumatic Cylinders Ⅱ

- Combined functions
- Braking and position locking
- High speed
- Special type
- Oscillation/rotation drive
- Modular unit
- Length measuring function
- Hands/chucks
- Related products
  - Shock absorber
  - Free joint
  - Simplified floating joint
  - Speed controller
- Cylinder switches

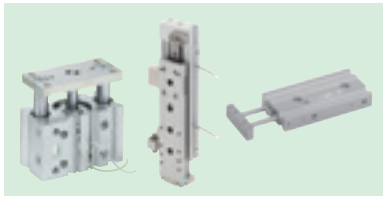
Combined functions

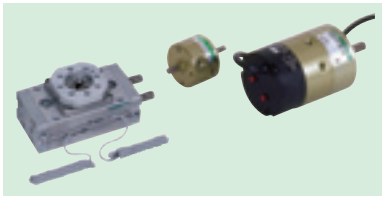
Oscillation/rotation drive

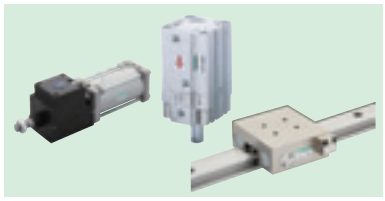
With brake/position locking


Hand/chuck

Pneumatic Valves

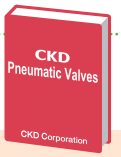

- Pilot operated
- Direct acting
- Explosion-proof
- Manual selector
- Related products

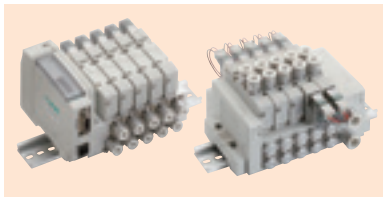
3, 4, 5-port pilot operated valve

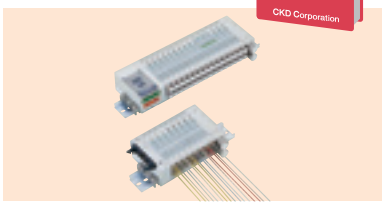
Reduced wiring valve

General Purpose Valves

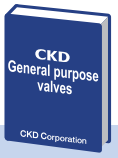

- 2, 3-port solenoid valves for various fluid control
  - Direct acting 2, 3-port solenoid valve
  - Pilot operated 2-port solenoid valve
  - Air driven 2, 3-port valve
  - Motorized ball valve
  - Components for Life Science
  - Related products for water
  - Gas combustion system
  - Automatic watering control device
  - Products for outdoor use
  - Special fluid control valve

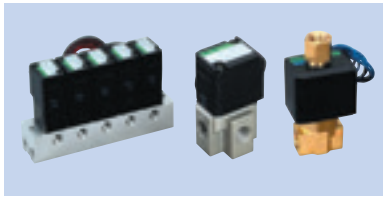
2, 3-port direct acting solenoid valve


2-port air operated valve

Index Units (Index Drive)



- Roller gear cam units
- Parallel cam units
- Pick and place units
- Direct drive actuators
- Drivers/controllers/dedicated terminals



Search
Selection
Precautions
F.R.L.
F.R.
F
R
L
Drain separator
Mechanical pressure SW
Residual pressure exhaust valve
Slow start valve
Anti-bacterial/ Bacteria removing F
Flame-resistant FR
Oil-prohibited R
Medium pressure FR
Copper and PTFE free FRL
Outdoors F.R.L.
Adapter/joiner
Pressure gauge
Compact FRL
Large FRL
Precision R
Vacuum F/R
Clean FR
Electro pneumatic R
Air booster
Speed controller
Silencer
Check valves/others
Fittings/tubes
Nozzle
Air unit
Precision components
Electronic pressure SW
Contact/close contact confirmation SW
Air sensor
Pressure SW for coolant
Flow sensor for air/ controller
Flow rate sensor for water
Total air systems (Total Air)
Total air systems (Gamma)
Gas generator
Refrigeration dryer
Desiccant dryer
High polymer membrane dryer
Main line filter
Drain discharger, etc.
Ending

I N D E X

User's Guide Intro Page 3

1 Search by product name/model No.
Product name Intro Page 1
Model No. index in alphabetic order Ending Page 48

2 Search by product series Intro Page 5
Select from external appearance and product description of each series.
Guide to model changes Intro Page 30
Recommended alternative products Intro Page 31

Guide to the CKD Electronic Catalog Intro Page 33

3 Search by specifications and variation Intro Page 35

System selection Intro Page 41
"Select by cylinder bore size and operation speed" or "Select by load value and operating time"

⚠ Safety precautions Intro Page 63
* For cautions for individual products, read the product-specific cautions for the corresponding series before use.

Flow characteristics display method	Intro Page 60
Degree of protection	Intro Page 61
Systems	Ending Page 1
Ozone-proof product	Ending Page 5
Introduction of made-to-order products	Ending Page 18
International System of Units (SI units)	Ending Page 22
JIS symbol list	Ending Page 23
● CE Marking	Ending Page 34
● CKD RoHS compliance	Ending Page 36
ISO9001/ISO14001 certification	Ending Page 38
Index (alphabetic order)	Ending Page 48

From the CKD website,
catalogs and CAD data (2D/3D-CAD)
can be downloaded.
https://www.ckd.co.jp/kiki/en/



F.R.L. units p.1

Pneumatic auxiliary components p.687

Air unit components p.931

Precision components p.1069

Pressure sensors p.1141

Sensor/controller components p.1359

Total Air system p.1605

Gas generator p.1673

Main line units p.1707

Product group	Product name		Page
F.R.L. units		Modular F.R.L.	23
		Related products (pressure gauge/display)	363
		Anti-bacterial/bacteria-removing filter	217
		Compact regulator, filter/regulator	381
		Large bore size filter, regulator	443
		Precision regulator	487
		Vacuum filter/vacuum regulator	529
		Clean filter/regulator	541
		Electro-pneumatic regulator	577
	Air booster	Air booster	675
Pneumatic auxiliary components		Speed controller	689
		Silencer	757
		Auxiliary valve (check valve/others)	781
		Fittings/tubes	813
		Air blow nozzles	915
Air unit components		Clean air unit (CAU30)	933
		Air unit (CXU)	947
Precision components		Glass float module (GFM)	1071
		Precise suction plate (PVP)	1107
		Magnetic spring buffer (FBU2)	1121
Pressure sensors	Pneumatic pressure sensor	Electronic pressure switch	1143
		Contact/close contact confirmation/ Cutting tool breakage detection switch	1235
		Air sensor (PEL systems)	1317
	Pressure switch for coolants	Mechanical/electronic pressure switch	1339
	Monitor		1353
Sensor/controller components	Flow rate sensor for air	Compact flow rate sensor (FSM3/FSM-X/FSM-V)	1361
		Compact flow rate controller (FCM)	1491
		Flow rate sensor separated display (PFD)	1529
		Flow sensor tester kit	1540
	Flow rate sensor for water	Karman's vortex (WFK2)	1553
		Capacitance (WFC)	1571
		Karman's vortex (WFK)	1587
Total Air system	Total air control systems (Total Air system)	Detector/circuit device	1607
	Total air control systems (Gamma system)	PLC components/ Signal control components	1649
Gas generator		Nitrogen gas extraction unit	1675
		Inline oxygen monitor	1699
Main line units		Refrigeration air dryer	1721
		Desiccant air dryers	1785
		High polymer membrane air dryer	1809
		Main line filter	1835
		Drain discharger	1903

User's Guide (How to browse/use the catalog)

Quickly search for and select a desired product using methods 1 to 3.

1 Searching by product name/model No.

If the product name/model No. are already determined, the desired series page can be found.

From INDEX

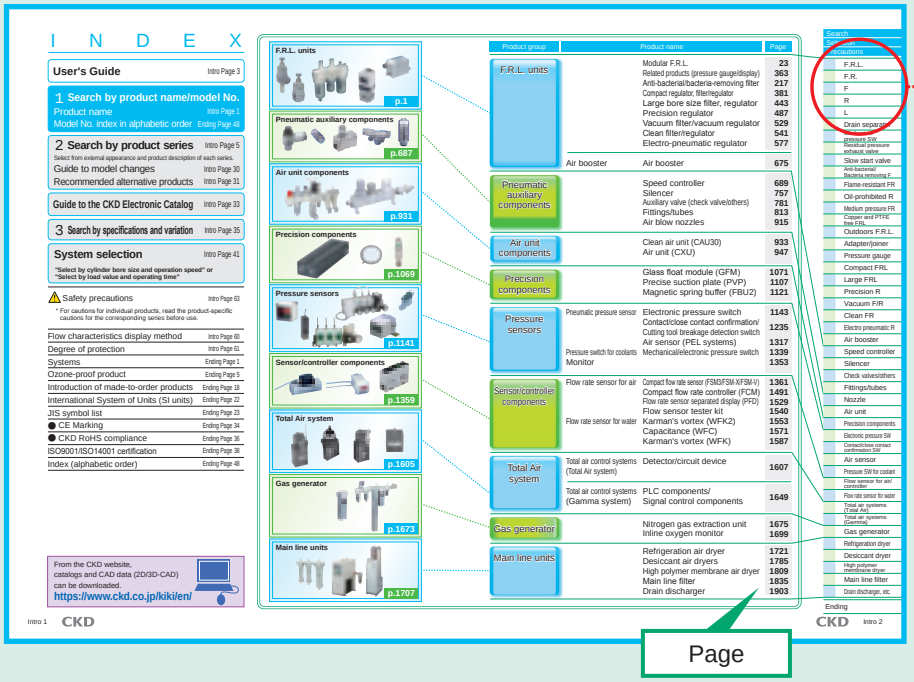

From page side indices

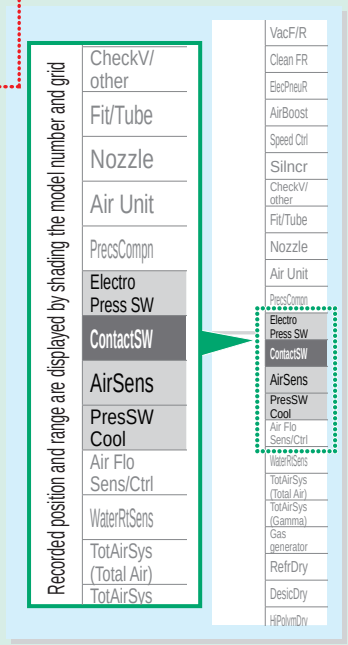

2 Searching by product series

Intro Page 7 to 31

If the product's series name is already determined, the desired series page can be found.

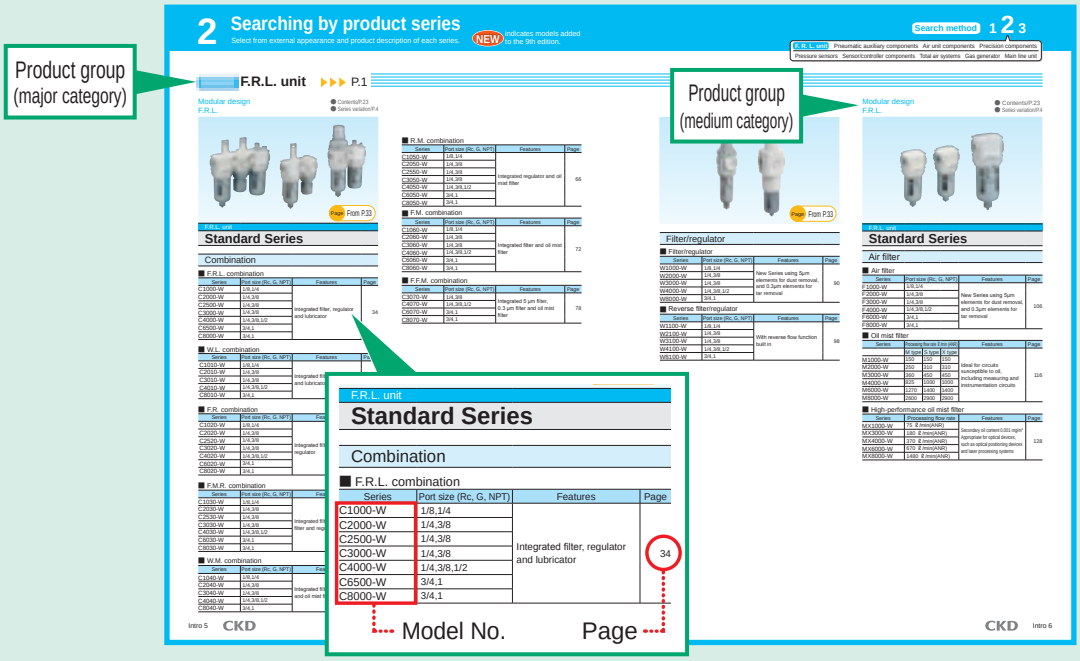

Ending Page 48 to 75

In alphabetical order

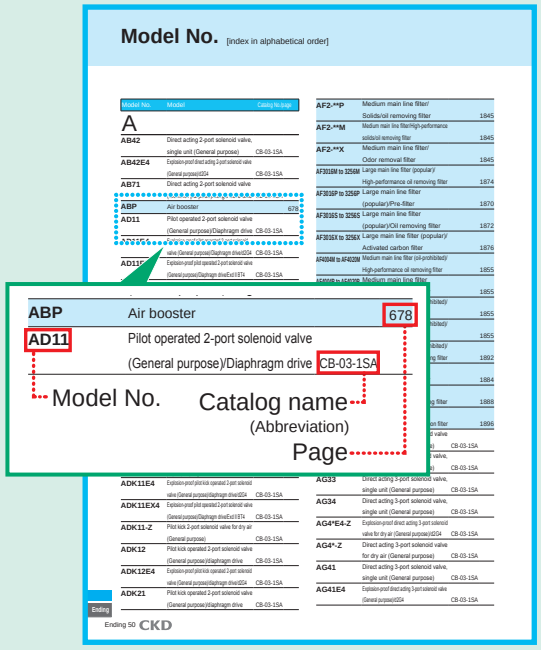

Icons (marks)

For easier use of the catalog, each item is marked and compatible items are indicated in the text.

Mark	Meaning	Details
CAD	CAD data is available for items with CAD marks next to the dimensions.	Intro Page 1
CE	European Standards compliant products.	Ending Page 34
RoHS	RoHS-compliant products.	Ending Page 36

3 Search by specifications and variation

Intro Page 35 to 40

If the variation format is already determined, the desired product can be found.

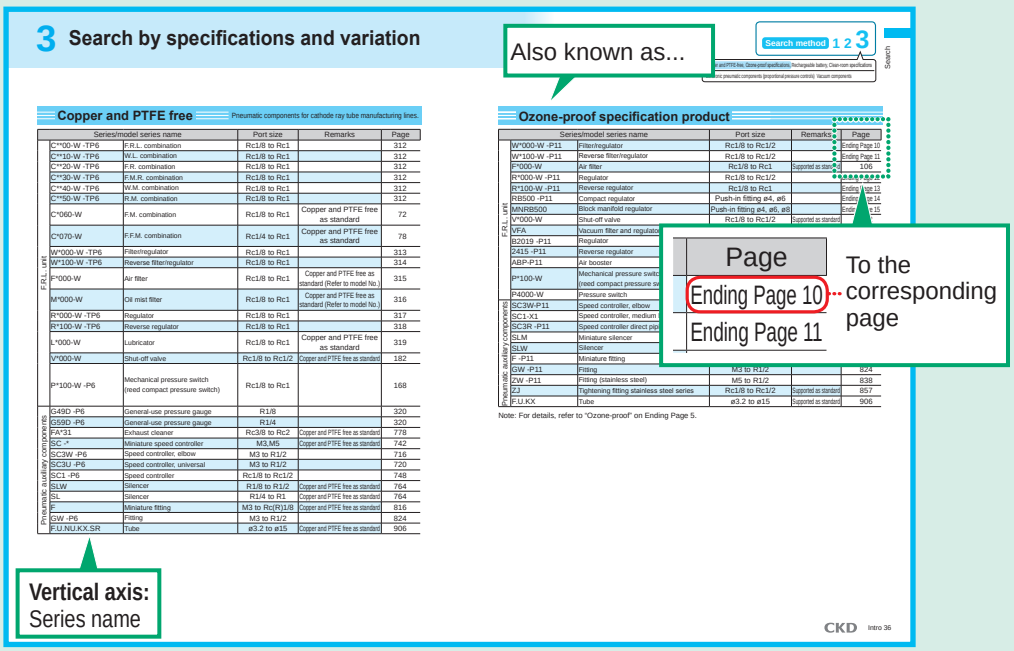

2 Searching by product series

Select from external appearance and product description of each series.

NEW indicates models added to the 9th edition.

F.R.L. unit ▶▶▶ P.1

Modular design
F.R.L.

Contents/P.23
Series variation/P.4



Page From P.33

F.R.L. unit

Standard Series

Combination

F.R.L. combination

Series	Port size (Rc, G, NPT)	Features	Page
C1000-W	1/8,1/4	Integrated filter, regulator and lubricator	34
C2000-W	1/4,3/8		
C2500-W	1/4,3/8		
C3000-W	1/4,3/8		
C4000-W	1/4,3/8,1/2		
C6500-W	3/4,1		
C8000-W	3/4,1		

W.L. combination

Series	Port size (Rc, G, NPT)	Features	Page
C1010-W	1/8,1/4	Integrated filter, regulator and lubricator	42
C2010-W	1/4,3/8		
C3010-W	1/4,3/8		
C4010-W	1/4,3/8,1/2		
C8010-W	3/4,1		

F.R. combination

Series	Port size (Rc, G, NPT)	Features	Page
C1020-W	1/8,1/4	Integrated filter and regulator	48
C2020-W	1/4,3/8		
C2520-W	1/4,3/8		
C3020-W	1/4,3/8		
C4020-W	1/4,3/8,1/2		
C6020-W	3/4,1		
C8020-W	3/4,1		

F.M.R. combination

Series	Port size (Rc, G, NPT)	Features	Page
C1030-W	1/8,1/4	Integrated filter, oil mist filter and regulator	54
C2030-W	1/4,3/8		
C2530-W	1/4,3/8		
C3030-W	1/4,3/8		
C4030-W	1/4,3/8,1/2		
C6030-W	3/4,1		
C8030-W	3/4,1		

W.M. combination

Series	Port size (Rc, G, NPT)	Features	Page
C1040-W	1/8,1/4	Integrated filter/regulator and oil mist filter	60
C2040-W	1/4,3/8		
C3040-W	1/4,3/8		
C4040-W	1/4,3/8,1/2		
C8040-W	3/4,1		

R.M. combination

Series	Port size (Rc, G, NPT)	Features	Page
C1050-W	1/8,1/4	Integrated regulator and oil mist filter	66
C2050-W	1/4,3/8		
C2550-W	1/4,3/8		
C3050-W	1/4,3/8		
C4050-W	1/4,3/8,1/2		
C6050-W	3/4,1		
C8050-W	3/4,1		

F.M. combination

Series	Port size (Rc, G, NPT)	Features	Page
C1060-W	1/8,1/4	Integrated filter and oil mist filter	72
C2060-W	1/4,3/8		
C3060-W	1/4,3/8		
C4060-W	1/4,3/8,1/2		
C6060-W	3/4,1		
C8060-W	3/4,1		

F.F.M. combination

Series	Port size (Rc, G, NPT)	Features	Page
C3070-W	1/4,3/8	Integrated 5 µm filter, 0.3 µm filter and oil mist filter	78
C4070-W	1/4,3/8,1/2		
C6070-W	3/4,1		
C8070-W	3/4,1		

Modular design
F.R.L.

Contents/P.23
Series variation/P.4



Page From P.33

Filter/regulator

Filter/regulator

Series	Port size (Rc, G, NPT)	Features	Page
W1000-W	1/8,1/4	New Series using 5µm elements for dust removal, and 0.3µm elements for tar removal	90
W2000-W	1/4,3/8		
W3000-W	1/4,3/8		
W4000-W	1/4,3/8,1/2		
W8000-W	3/4,1		

Reverse filter/regulator

Series	Port size (Rc, G, NPT)	Features	Page
W1100-W	1/8,1/4	With reverse flow function built in	98
W2100-W	1/4,3/8		
W3100-W	1/4,3/8		
W4100-W	1/4,3/8,1/2		
W8100-W	3/4,1		



F.R.L. unit

Standard Series

Air filter

Air filter

Series	Port size (Rc, G, NPT)	Features	Page
F1000-W	1/8,1/4	New Series using 5µm elements for dust removal, and 0.3µm elements for tar removal	106
F2000-W	1/4,3/8		
F3000-W	1/4,3/8		
F4000-W	1/4,3/8,1/2		
F6000-W	3/4,1		
F8000-W	3/4,1		

Oil mist filter

Series	Processing flow rate L/min (ANR)			Features	Page
	M type	S type	X type		
M1000-W	150	150	150	Ideal for circuits susceptible to oil, including measuring and instrumentation circuits	116
M2000-W	250	310	310		
M3000-W	360	450	450		
M4000-W	825	1000	1000		
M6000-W	1270	1400	1400		
M8000-W	2600	2900	2900		

High-performance oil mist filter

Series	Processing flow rate	Features	Page
MX1000-W	75 L/min(ANR)	Secondary oil content 0.001 mg/m^3 Appropriate for optical devices, such as optical positioning devices and laser processing systems	128
MX3000-W	180 L/min(ANR)		
MX4000-W	370 L/min(ANR)		
MX6000-W	670 L/min(ANR)		
MX8000-W	1480 L/min(ANR)		

2 Searching by product series

Select from external appearance and product description of each series.

NEW indicates models added to the 9th edition.

F.R.L. unit ▶▶▶ P.1

Modular design
F.R.L.

● Contents/P.23
● Series variation/P.4



Page From P.33

F.R.L. unit

Standard Series

Regulator

■ Regulator

Series	Port size (Rc, G, NPT)	Features	Page
R1000-W	1/8,1/4	Compact, pressure gauge embedded.	136
R2000-W	1/4,3/8		
R3000-W	1/4,3/8		
R4000-W	1/4,3/8,1/2		
R6000-W	3/4,1		
R8000-W	3/4,1		

■ Reverse regulator

Series	Port size (Rc, G, NPT)	Features	Page
R1100-W	1/8,1/4	With reverse flow function built in	144
R2100-W	1/4,3/8		
R3100-W	1/4,3/8		
R4100-W	1/4,3/8,1/2		
R6100-W	3/4,1		
R8100-W	3/4,1		



Lubricator

■ Lubricator

Series	Port size (Rc, G, NPT)	Features	Page
L1000-W	1/8,1/4	Supplies fine oil mist	152
L3000-W	1/4,3/8		
L4000-W	1/4,3/8,1/2		
L8000-W	3/4,1		



NEW

Drain separator

■ Drain separator

Series	Port size (Rc,G,NPT)	Features	Page
FX1004	1/4,3/8	With no need for element, 99% water separation efficiency is achieved	160
FX1011	1/4,3/8,1/2		
FX1037	3/4,1		

Modular design
F.R.L.

Contents/P.23
Series variation/P.4



Page From P.33

F.R.L. unit

Related products

Mechanical pressure switch

■ Pressure switch

Series	Port size	Features	Page
P4000-W	Rc1/4,3/8,1/2	Wide pressure setting range covers 0.1 to 0.8 MPa	166

■ Compact mechanical pressure switch with reed switch

Series	Port size	Features	Page
P1100-W	Rc1/8,1/4	Space-saving and can be set over a wide range of pressure	168
P4100-W	Rc1/4,3/8,1/2		
P8100-W	Rc3/4,1		

■ Pressure switch

Series	Port size	Features	Page
APE	Rc1/4	Setting accuracy within 0.02 MPa Setting range from 0.1 to 0.8 MPa	172

■ Reed switch - compact mechanical contact pressure switch

Series	Port size	Features	Page
APS-W	Rc1/8 flange	Space-saving and features a wide pressure setting range	176

Residual pressure exhaust valve

■ Residual pressure exhaust valve

Series	Port size (Rc, G, NPT)	Features	Page
V1000-W	1/8,1/4	Ideal for preventing residual pressure accidents	182
V3000-W	1/4,3/8,1/2		

■ With locking hole (OSHA compliant)

Series	Port size (Rc, G, NPT)	Features	Page
V3010-W	1/4,3/8,1/2	OSHA compliant	185
V6010-W	3/4,1		

■ With push-in fitting (Quick Valve)

Series	Compatible tube O.D.	Features	Page
2QV	R1/8,1/4	2-way valve	188
3QV	ø4,6,8,10,12	3-way valve	

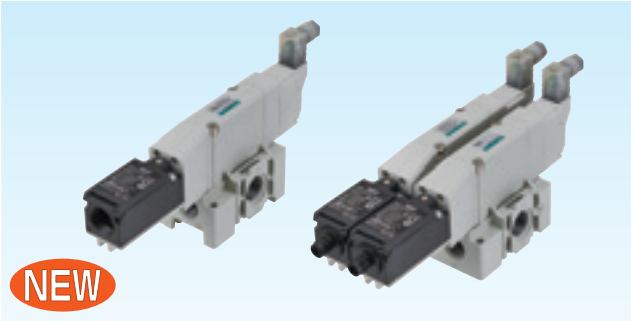

Residual pressure exhaust valve with spool position detection

■ Residual pressure exhaust valve with spool position detection

Series	Port size	Features	Page
SNS	3/8,1/2	Certified for safety standard ISO 13849-1 (Category 2, 3, 4 compliant)	196

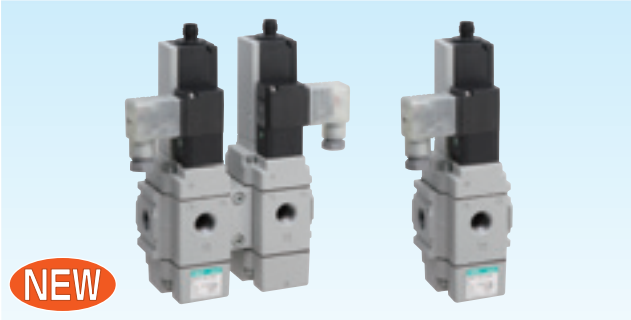

3-port solenoid valve with spool position detection

■ 3-port solenoid valve with spool position detection

Series	Port size	Features	Page
SNP	Rc3/8,1/2,3/4	Spool position detection for reliable open/close detection	206



Slow start valve

■ Slow start valve

Series	Port size	Features	Page
V3301-W	Rc1/4,3/8,1/2	Ensuring safety when starting and stopping	214
V3321-W			

2 Searching by product series

Select from external appearance and product description of each series.

NEW indicates models added to the 9th edition.

F.R.L. unit ▶▶▶ P.1

Anti-bacterial/bacteria-removing filter

● Contents/P.217
● Series variation/P.222



Page From P.217

F.R.L. unit

Anti-bacterial/bacteria-removing filter

■ Anti-bacterial/bacteria-removing filter combination

Series	Port size (Rc, G, NPT)	Features	Page
SFC307	1/4,3/8	Anti-bacterial pre-filter, anti-bacterial high performance filter and bacteria removing filter	226
SFC407	1/4,3/8,1/2		

■ Anti-bacterial/bacteria-removing/odor removing filter combination

Series	Port size (Rc, G, NPT)	Features	Page
SFC309	1/4,3/8	Anti-bacterial pre-filter, anti-bacterial high performance filter, odor removing filter and bacteria removing filter	228
SFC409	1/4,3/8,1/2		

■ Anti-bacterial filter combination

Series	Port size (Rc, G, NPT)	Features	Page
SFC306	1/4,3/8	Integrating anti-bacterial pre-filter and anti-bacterial high performance filter	230
SFC406	1/4,3/8,1/2		
SFC806	3/4,1		

■ Anti-bacterial/odor removing filter combination

Series	Port size (Rc, G, NPT)	Features	Page
SFC308	1/4,3/8	Anti-bacterial pre-filter, Integrating anti-bacterial high performance filter and odor removing filter	232
SFC408	1/4,3/8,1/2		
SFC808	3/4,1		

■ Anti-bacterial pre-filter

Series	Port size (Rc, G, NPT)	Features	Page
SFC310	1/4,3/8	Filtration 5 µm (removal efficiency 90% or more), anti-bacterial, compliant with the Food Sanitation Act and the FDA	234
SFC410	1/4,3/8,1/2		
SFC810	3/4,1		

■ Anti-bacterial high performance filter

Series	Port size (Rc, G, NPT)	Features	Page
SFC320	1/4,3/8	Filtration 0.1 µm (removal efficiency 99% or more), anti-bacterial, compliant with the Food Sanitation Act and the FDA	236
SFC420	1/4,3/8,1/2		
SFC820	3/4,1		

■ Bacteria removing filter

Series	Port size (Rc, G, NPT)	Features	Page
SFC330	1/4,3/8	Filtration 0.01 µm (removal efficiency 99.99% or more), materials compliant with the Food Sanitation Act and the FDA	238
SFC430	1/4,3/8,1/2		

■ Odor removing filter

Series	Port size (Rc, G, NPT)	Features	Page
SFC340	1/4,3/8	Deodorization performance, materials compliant with the Food Sanitation Act and the FDA	240
SFC440	1/4,3/8,1/2		
SFC840	3/4,1		

■ Bacteria removing inline

Series	Port size	Features	Page
SFS10	Rc1/4,Rc3/8,ø8,ø10,ø12	Materials compliant with the Food Sanitation Act and the FDA	242

Modular design F.R.L.

● Contents/P.23
● Series variation/P.4



Page From P.251

F.R.L. unit

Flame-resistant Series

Filter/regulator

■ Filter/regulator

Series	Port size (Rc, G, NPT)	Features	Page
W3000-G4	1/4,3/8	5 µm dust removing element and 0.3 µm tar removing element New Series of Elements	252
W4000-G4	1/4,3/8,1/2		
W8000-G4	3/4,1		

■ Reverse filter/regulator

Series	Port size (Rc, G, NPT)	Features	Page
W3100-G4	1/4,3/8	With reverse flow function built in	258
W4100-G4	1/4,3/8,1/2		
W8100-G4	3/4,1		



Air filter

■ Air filter

Series	Port size (Rc, G, NPT)	Features	Page
F3000-G4	1/4,3/8	5 µm dust removing element and 0.3 µm tar removing element New Series of Elements	266
F4000-G4	1/4,3/8,1/2		
F8000-G4	3/4,1		

Regulator

■ Regulator

Series	Port size (Rc, G, NPT)	Features	Page
R3000-G4	1/4,3/8	Compact, pressure gauge embedded	274
R4000-G4	1/4,3/8,1/2		
R8000-G4	3/4,1		

■ Reverse regulator

Series	Port size (Rc, G, NPT)	Features	Page
R3100-G4	1/4,3/8	With reverse flow function built in	280
R4100-G4	1/4,3/8,1/2		
R8100-G4	3/4,1		

Modular design
F.R.L.

Contents/P.23
Series variation/P.4



Page From P.287

F.R.L. unit

Oil-prohibited Series

Regulator

■ Regulator

Series	Port size	Features	Page
RN3000	Rc1/4,Rc3/8	Modular design regulator with oil-prohibited fluid passage	288
RN4000	Rc1/4,Rc3/8,Rc1/2		
RN8000	Rc3/4,Rc1		

Modular design
F.R.L.

Contents/P.23
Series variation/P.4



Page From P.295

F.R.L. unit

Medium pressure Series

Air filter

■ Air filter

Series	Port size (Rc, G, NPT)	Features	Page
FM3000-W	1/4,3/8	Air filter F3000 to F8000 Series medium pressure specifications	296
FM4000-W	1/4,3/8,1/2		
FM6000-W	3/4,1		
FM8000-W	3/4,1		

Oil mist

■ Oil mist filter

Series	Processing flow rate L/min (ANR)			Features	Page
	M type	S type	X type		
MM3000-W	490	610	610	Oil mist filter M3000 to M8000 Series medium pressure specifications	302
MM4000-W	1130	1370	1370		
MM6000-W	1740	1920	1920		
MM8000-W	3560	3980	3980		

Regulator

■ Regulator

Series	Port size (Rc, G, NPT)	Features	Page
RM3000-W	1/4,3/8	Regulator R3000, R4000 Series medium pressure specifications	308
RM4000-W	1/4,3/8,1/2		

Modular design
F.R.L.

Contents/P.23
Series variation/P.4

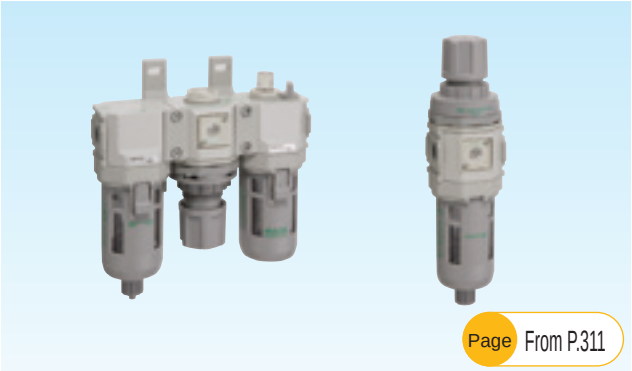

Page From P.311

F.R.L. unit

Copper and PTFE free Series

Combination

■ F.R.L. combination

Series	Port size (Rc, G, NPT)	Features	Page
C1000 to 8000-W-P6	1/8 to 1	Integrated filter, regulator and lubricator	312

Filter/regulator

■ Filter/regulator

Series	Port size (Rc, G, NPT)	Features	Page
W1000 to 8000-W-P6	1/8 to 1	New Series using 5μm elements for dust removal, and 0.3μm elements for tar removal	313

■ Reverse filter/regulator

Series	Port size (Rc, G, NPT)	Features	Page
W1100 to 8100-W-P6	1/8 to 1	With reverse flow function built in	314

2 Searching by product series

Select from external appearance and product description of each series.

NEW indicates models added to the 9th edition.

F.R.L. unit ▶▶▶ P.1

Modular design
F.R.L.

● Contents/P.23
● Series variation/P.4



Page From P.311

F.R.L. unit

Copper and PTFE free Series

Air filter

■ Air filter

Series	Port size (Rc, G, NPT)	Features	Page
F1000 to 8000-W	1/8 to 1	New Series using 5μm elements for dust removal, and 0.3μm elements for tar removal	315

■ Oil mist filter

Series	Port size (Rc, G, NPT)	Features	Page
M1000 to 8000-W	1/8 to 1	Ideal for circuits susceptible to oil, including measuring and instrumentation circuits	316

Regulator

■ Regulator

Series	Port size (Rc, G, NPT)	Features	Page
R1000 to 8000-W-P6	1/8 to 1	Compact, pressure gauge embedded.	317

■ Reverse regulator

Series	Port size (Rc, G, NPT)	Features	Page
R1100 to 8100-W-P6	1/8 to 1	With reverse flow function built in	318

Lubricator

■ Lubricator

Series	Port size (Rc, G, NPT)	Features	Page
L1000 to 8000-W	1/8 to 1	Supplies fine oil mist	319

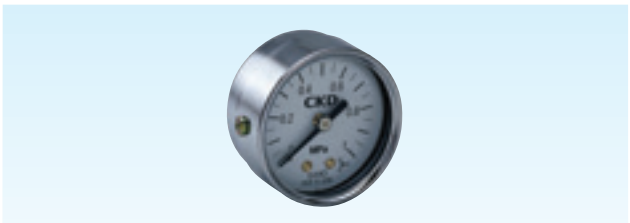

Pressure gauge

■ General purpose

Series	Port size	Features	Page
G49D-P6 G59D-P6	R1/8,1/4	Glass lens is used	320

Modular design
F.R.L.

● Contents/P.23
● Series variation/P.4

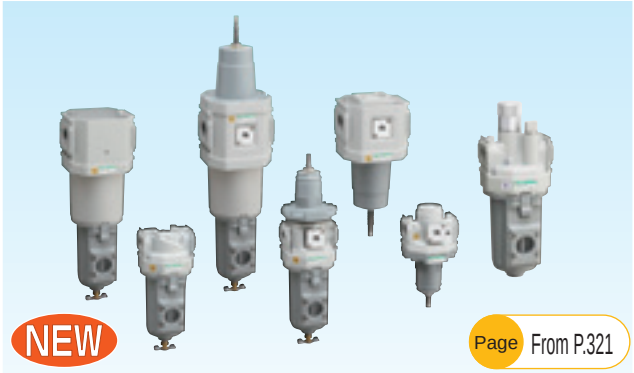

NEW

Page From P.321

F.R.L. unit

Outdoor Series

Filter/regulator

■ Filter/regulator

Series	Port size (Rc, G, NPT)	Features	Page
WW4000	1/4,3/8,1/2	Filter/regulator W4000, W8000 Series outdoor specifications	324
WW8000	3/4,1		
BW7019	Rc1/4	Air filter/regulator integrated outdoor specifications	328

Air filter

■ Air filter

Series	Port size (Rc, G, NPT)	Features	Page
FW4000	1/4,3/8,1/2	Air filter F4000, F8000 Series outdoor specifications	330
FW8000	3/4,1		

Oil mist filter

■ Oil mist filter

Series	Processing flow rate L/min (ANR)		Features	Page
	M type	S type		
MW4000	825	1000	Oil mist filter M4000, M8000 Series outdoor specifications	334
MW8000	2600	2900		

Regulator

■ Regulator

Series	Port size (Rc, G, NPT)	Features	Page
RW4000	1/4,3/8,1/2	Regulator R4000, R8000 Series outdoor specifications	338
RW8000	3/4,1		

Lubricator

■ Lubricator

Series	Port size (Rc, G, NPT)	Features	Page
LW4000	1/4,3/8,1/2	Lubricator LW4000, LW8000 Series outdoor specifications	342
LW8000	3/4,1		

Modular design
F.R.L.

Contents/P.23
Series variation/P.4



Listed page From P.345

F.R.L. unit

Attachment

Bracket/joiner

Bracket

Series	Application	Features	page
B***-W	Modular design mounting bracket	T, C, L types	346

Joiner

Series	Application	page
J***-W	Modular design fittings	346



Distributor

Distributor

Series	Application	Features	page
D*01-00-W	Modular design Piping branch bracket	For piping port branch	348

Pipe adaptor

Pipe adaptor

Series	Application	Features	page
A***-W	Modular design pipe adaptor	Pipe adaptor set	350

Contents/P.1
Series variation/P.4



Listed page From P.363

F.R.L. unit

Related products (Pressure gauge/display)

Pressure gauge

Pressure gauge assembly

Series	Connection method	Features	page
G401	O-ring sealant	Low-profile type ideal for embedding in devices	364

With safety marker / limit marker

Series	Connection method	Features	page
G40D	R1/8, 1/4	Easy visual inspection control due to green and red zone display	365
G45D		Easy visual inspection control thanks to the green arrow.	366

General purpose

Series	Connection method	Features	page
G49D, G59D	R1/8, 1/4	Glass lens is used	367

NEW Outdoor Series

Series	Port size	Features	page
GW49D	R1/8, 1/4	Glass lens is used	369

Pressure gauge for panel mounting/pressure gauge with switch

Series	Connection method	Features	page
G53D	R1/8, 1/4	With panel mounting added	370
G52D	R 1/4	With pressure switch function added	372

Miniature/round

Series	Connection method	Features	page
G29D	R1/16, 1/8	Pressure display unit ø21 *Made-to-order product	374
G39D	R 1/8	For practical use *Made-to-order product	375

Vacuum pressure gauge

Series	Differential pressure measured range	Features	page
VG41D	R 1/8	Green arrow	376

Differential pressure gauge

Series	Differential pressure measured range	Features	page
GA400-8-P02	0 to 0.2 MPa	For controlling air filter service life	378

Contents/P.1
Series variation/P.4



Listed page From P.379

F.R.L. unit

Indicator

Moisture indicator

Series	Port size	Features	page
6119	Rc1/4	For dew point monitor of desiccant air dryer	379

2 Searching by product series

Select from external appearance and product description of each series.

NEW indicates models added to the 9th edition.

F.R.L. unit ▶▶▶ P.1

● Contents/P.1
● Series variation/P.4



F.R.L. unit

Compact regulator, Filter/regulator

Regulator

■ Compact piston

Series	Port size	Features	Page
RA800	Rc1/8,1/4	Simplified regulator with small size, light weight and improved operation	382

■ Compact regulator

Series	Port size	Features	Page
RB500	Push-in fitting ø4/6	Compact and space saving design	386

Filter/regulator

■ Compact filter/regulator

Series	Port size	Features	Page
WB500	Push-in fitting ø4/6	Compact and space saving design	388

Block manifold regulator

■ Block manifold regulator

Series	Port size	Features	Page
MNRB500A	Push-in fitting ø6/8	The block manifold allows the number of stations to be increased and decreased as desired.	392
MNRB500B	Push-in fitting ø4/6		

Inline filter

■ Inline filter

Series	Port size	Features	Page
FSL100	Push-in fitting ø4/6	Compact, lightweight and space saving inline allowing use with both positive and negative pressure.	406
FSL200	Push-in fitting ø4/6		
FSL500	Push-in fitting ø6/8/10		

Separated

■ F.R.L kit

Series	Port size	Features	Page
K60570	Rc1/8,1/4	Set of filter/regulator/ lubricator	410

■ F.R. unit

Series	Port size	Features	Page
B7019	Rc1/8,1/4	Integrated air filter and regulator	412

■ Filter

Series	Port size	Features	Page
A1019 (air filter)	Rc1/8,1/4	Filtration 5 µm	414
1219 (micro alescer micro naught)	Rc1/8,1/4	Filtration 5 µm	416

■ Regulator

Series	Port size	Features	Page
B2019 (regulator)	Rc1/8,1/4	Relief mechanism integrated	418
2419 (reverse regulator)	Rc1/8,1/4	Check valve mechanism integrated	420

■ Relief valve

Series	Port size	Features	Page
B6061	Rc1/8,1/4	If press increases, compress air released into atm to maintain set press	422

■ Lubricator

Series	Port size	Features	Page
A3019 (Econo-mist)	Rc1/8,1/4	Supplying fine oil mist (oil fog)	424

Regulator for water

Series	Port size	Features	Page
WR1	Rc1/8,1/4	Easy-to-use compact regulator for water	430
WR2	Rc3/8,1/2		

Contents/P.1
Series variation/P.4

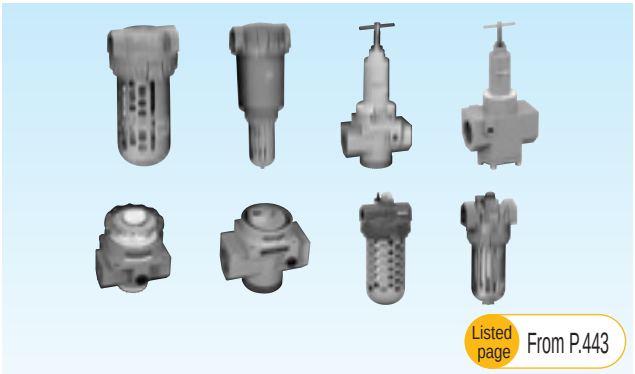

Listed page From P.443

F.R.L. unit

Large bore size filter, regulator

Air filter

Filter

Series	Port size	Features	page
1138 (Air filter)	Rc3/4, 1	Filtration 5 µm	444
1126 (Air filter)	Rc1¼, 1½, 2		
1138, A1338 (Submicron air filter)	Rc3/4, 1	99% of up to 0.3 µ solid substances such as tar and carbon are removed.	448
1126, 1326 (Submicron air filter)	Rc1¼, 1½, 2		
1238 (Micro alescer micro naught)	Rc3/4	Oil content to be 0.1 PPM w/w or less	450
1226 (Micro alescer micro naught)	Rc1		
1226J (Micro alescer micro naught)	Rc1¼, 1½, 2		
1226 (Micro alescer odor naught)	Rc1	Absorbs odor particles, Deodorizes compressed air	454
1226J (Micro alescer odor naught)	Rc1¼, 1½, 2		

Regulator

Series	Port size	Features	page
2215	Rc¾, 1, 1¼	Relief mechanism integrated	458
2216	Rc1½, 2		
2415 (reverse regulator)	Rc¾, 1, 1¼	Check valve mechanism integrated	462

Dial air regulator

Series	Port size	Features	page
2302-*C	Rc1/4, 3/8, 1/2, 3/4	Dial provided to enable easy pressure adjustment	464
2303-*C	Rc3/4, 1, 1¼		
2304-*C	Rc1½, 2		

Remote dial air regulator

Series	Port size	Features	page
2302-*C	Rc1/4, 3/8, 1/2, 3/4	With pilot port to enable pressure setting/remote control	467
2303-*C	Rc3/4, 1, 1¼		
2304-*C	Rc1½, 2		

Lubricator

Series	Port size	Features	page
3003E to 3005E (Econo-mist)	Rc3/4 to 2	Fine oil mist Supplying (oil fog)	470
3003E (Auto-fill)	Rc3/4, 1	Automatic lubrication to multiple lubricators is possible just by installing an oil tank	474



Listed page From P.487

F.R.L. unit

Precision regulator

Regulator

Compact direct acting precision regulator

Series	Port size	Features	page
RJB500	Push-in fitting ø4/6	Compact with 25 mm interface dimension Min. set pressure 0.01 MPa.	490

Block manifold regulator

Block manifold regulator

Series	Port size	Features	page
MNRJB500A	Push-in fitting ø6/ø8	The block manifold allows the number of stations to be increased and decreased as desired.	492
MNRJB500B	Push-in fitting ø4/6		



Regulator

Precision regulator (module design)

Series	Port size(Rc,G,NPT)	Features	page
NEW RPE1000	1/4	70% less air consumption Ideal for precise tension controller, etc.	512
RP1000	1/4	From 0.003MPa Excellent performance with very low pressure/low pressure	518
RP2000	1/4, 3/8	Ideal for balancer Large exhaust flow rate	522

2 Searching by product series

Select from external appearance and product description of each series.

NEW indicates models added to the 9th edition.

F.R.L. unit ▶▶▶ P.1

● Contents/P.1
● Series variation/P.4



Page From P.529

Vacuum filter

■ Vacuum filter

Series	Port size	Features	Page
VFA1000	Rc1/8,1/4	Long service life, moisture removable	530
VFA3000	Rc1/4,3/8		
VFA4000	Rc3/8,1/2		



Page From P.535

Vacuum regulator

■ Vacuum regulator

Series	Port size	Features	Page
VRA2000	1/4,3/8	Compact/large flow rate (200 L/min (ANR))	536

CC-796A

Vacuum system equipment
SELVACS

SELVACS
Selex Vacuum System

Convey, transport and move various products and parts
Can be used for insertion, positioning, box packing, etc.

Vacuum ejector
Vacuum unit

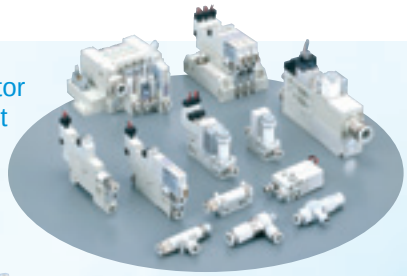



Suction pad

Vacuum-related products





NEW

New models and variations added to lineup!

Wide variation meeting different applications!
Extensive series models and variations handle a wide range of fields and applications.

Compact design
Each component has been compactly designed to save space.

Unitized/modularized
The vacuum ejector/vacuum unit at the core are unitized and modularized, and designed to save space and increase ease of use.

Contents/P.1
Series variation/P.4



Page From P.541

F.R.L. unit

Clean filter/regulator

Filter

Inline clean filter

Series	Port size	Features	Page
FCS500	ø4,ø6,ø8 R1/8,R1/4	High filtration rating precision 0.01µm and removal ratio 99.99%	544
FCS1000	ø8,ø10,ø12 R1/4,R3/8,Rc1/4,Rc3/8		548

Clean exhaust filter

Series	Port size	Features	Page
FAC10	ø4,ø6,ø8,ø10	High filtration degree of 0.01µm, removal efficiency of 99.99% Provides direct exhaust within a clean room	554
FAC100	R1/8,R1/4		
FAC200	R3/8,R1/2		
FAC3000	Rc3/8,Rc1/2		



Regulator

Clean regulator

Series	Port size	Features	Page
RC2000	Rc1/4,Rc3/8,Rc1/2	Oil-prohibited specifications/ stainless steel body	566

Regulator

Series	Port size	Features	Page
2619	Rc1/8,Rc1/4	Oil-prohibited specifications	570

Contents/P.1
Series variation/P.580



Page From P.577

F.R.L. unit

Electro pneumatic regulator

Digital electro pneumatic regulator

Series	Max. flow rate	Features	Page
EVD-1100	60 L/min(ANR)	Compact/high-performance digital control	586
EVD-1500	400 L/min(ANR)		
EVD-1900			
EVD-3100	700 L/min(ANR)		590
EVD-3500	1500 L/min(ANR)		
EVD-3900			

Electro pneumatic regulator

Series	Max. flow rate	Features	Page
EVR-2500	800 L/min(ANR)	Medium flow rate	610
EVR-2509	800 L/min(ANR)		
EVS2100	2 L/min(ANR)	Compact	622
EVS2500	6 L/min(ANR)		
EV2100V	150 L/min(ANR)	Vacuum	625
EV2109V	120 L/min(ANR)		

Low pressure electro pneumatic regulator

Series	Max. flow rate	Features	Page
EVL	100 L/min(ANR)	Compact for low pressure	630

Thin electro pneumatic regulator

Series	Max. flow rate	Features	Page
MEVT	2 to 6 L/min(ANR)	Thin	638

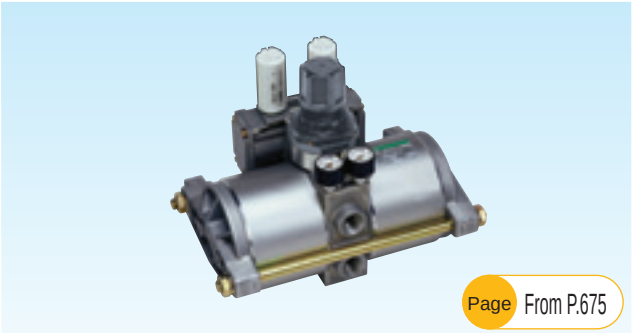

Page From P.675

Air booster

Series	Applicable	Page
ABP	Air booster	678

2 Searching by product series

Select from external appearance and product description of each series.

NEW indicates models added to the 9th edition.

Pneumatic auxiliary components P.687



Speed controller

With dial

NEW

Series	Port size	Features	Page
DSC	M5,R1/8,1/4,3/8,1/2	Enables easy control of cylinder speed values	694

Needle valve with adjusting dial

Series	Port size	Features	Page
DVL	R1/8,1/4,3/8	Linear flow characteristics of rotating needle valve adopted	708

Elbow, push-in fitting

Series	Port size	Features	Page
SC3W	M3,M5,R1/8,1/4,3/8,1/2	Push-in fitting ø3.2 to ø12	716

Universal/push-in fitting

Series	Port size	Features	Page
SC3U	M3,M5,R1/8,1/4,3/8,1/2	Push-in fitting ø3.2 to ø12	720

Line type/with push-in fitting

Series	Port size	Features	Page
SCL2	ø1.8,ø4,ø6,ø8,ø10, ø12	Applicable to the remote centralized control of actuators	726

In/out line type/with push-in fitting

Series	Port size	Features	Page
SCD2	ø1.8,ø4,ø6,ø8,ø10, ø12	Enables flow control for both air supply and exhaust	726

Needle valve/line type with push-in fitting

Series	Port size	Features	Page
SCL2-N	ø4,ø6,ø8	Flow rate adjustm needle v Val - non-scatter grease. Clean-room/oil-prohibited specs.	730

Stainless steel anti-corrosion

Series	Port size	Features	Page
SC3P	M5,R1/8,R1/4,R3/8,R1/2	Speed control valve with anti-corrosive stainless steel body	736

Direct piping/elbow

Series	Port size	Features	Page
SC3R	M5,Rc1/8,1/4,3/8,1/2	Direct piping, L-shape rotation M5 to Rc1/2	740

Miniature

Series	Port size	Features	Page
SC	M3,M5	Compact, lightweight, and space saving	742

Miniature fine speed

Series	Port size	Features	Page
SC-M5-*-F	M5	Speed adjustm of fine speed Cyl/air valve	742

Miniature in/out

Series	Port size	Features	Page
SCD	M3,M5	Enables flow control for both air intake / exhaust	744

Medium bore size

Series	Port size	Features	Page
SC1	Rc1/8,1/4,3/8,1/2	Applicable to general medium bore sizes	748

Large bore size

Series	Port size	Features	Page
SC	Rc3/4,1,1 1/4,1 1/2,2	Applicable to general large bore sizes	750

Outdoor Series

Series	Port size	Features	Page
NEW SC1-W	Rc1/4,3/8,1/2	Applicable for outdoor use	752



Page From P.757

Silencer

Metering valve with silencer

Series	Piping bore size	Features	Page
SMW2	R1/8,1/4	With speed controller and silencer function	760
FMS	M5		762
SMW	R3/8,1/2		

Small bore size

Series	Piping bore size	Features	Page
SL	M5	Compact with M5 screw	764

Resin body

Series	Piping bore size	Features	Page
SLW	R1/8,1/4,3/8,1/2	Noise reduction effect of 30 dB [A] or more	764
SLW-*A-H	R1/4,3/8,1/2	High noise reduction small bore size	766

Large flow rate/small bore size/resin body

Series	Piping bore size	Features	Page
SLW-*L	R1/4,3/8	Noise reduction effect of 30 dB [A] or more	767

High noise reduction/compact

Series	Piping bore size	Features	Page
SLW-*S	R1/8,1/4	Noise reduction effect 25 to 30 dB [A] or more	768
	R3/4		769

Push-in

Series	Piping bore size	Features	Page
SLW-H	R1/4,3/8,1/2	Noise reduction effect of 40 dB [A] or more	770

Miniature

Series	Piping bore size	Features	Page
SLM	M3,M5	Noise reduction effect of 20 dB [A] or more	771

Aluminum body

Series	Piping bore size	Features	Page
SL	R1/4 to 2	Noise reduction effect of 20 dB [A] or more	772

Outdoor Series

Series	Port size	Features	Page
NEW SL-W	Rc1/4,3/8,1/2	Noise reduction effect of 20 dB [A] or more	774

Exhaust cleaner

Series	Port size	Features	Page
FA*31	Rc3/8 to 2	Exhaust noise and oil mist are 99.9% removed	778



NEW Page From P.781

Auxiliary valve

Quick manual valve

Series	Piping bore size	Features	Page
QEL	ø4,ø6	Compact/space saving inline and plug	786
QEV2	Rc1/8 to 1	Speeds up cylinder exhaust	790

Shuttle valve

Series	Piping bore size	Features	Page
SHV2	Rc1/8 to 1	Multiple air pressure signals are selected to configure the circuit.	794

Compact check valve with push-in fitting

Series	Piping bore size	Features	Page
CHL	M5,ø4,ø6	Compact/space saving inline	798

Check valve

Series	Piping bore size	Features	Page
CHV2	Rc1/8 to 1 1/2	Completely prevents reverse flow of compressed air	800

Block valve

Series	Piping bore size	Features	Page
FPV	M5,R1/8,1/4,3/8,1/2	The cylinder can be stopped at any position and mounted as desired	802

Threshold sensor

Series	Piping bore size	Features	Page
PWS	M5,R(Rc)1/8,1/4,3/8,1/2	Detects exhaust pressure near the stroke end accurately	806

2 Searching by product series

Select from external appearance and product description of each series.

NEW indicates models added to the 9th edition.

Pneumatic auxiliary components P.687



Fittings/tubes

■ Miniature fitting

Series	Port size	Features	page
F	M3 to R(Rc)1/8	For bore sizes ø3.2, 4, 6	816

■ Fitting

Series	Port size	Features	page
GW	M3 to R(Rc)1/2	For ø3.2 to 16 push-in fitting	824

■ Fitting/small size

Series	Port size	Features	page
GWJ	M3 to R(Rc)1/8	For ø3.2 to 6 compact push-in fitting	838

■ Fitting (stainless steel)

Series	Port size	Features	page
ZW	M5 to R1/2	Push-in fitting for flame-resistant resin and stainless steel	844

■ Fitting (stainless steel)

Series	Port size	Features	page
ZSP	M5 to R1/2	Stainless steel for metal body, Uses push-in fittings SUS303 or equivalent	848

■ Tightening fitting (stainless steel)

Series	Port size	Features	page
ZJ	R1/8 to R1/2	Stainless steel tightening fitting	857

■ Tightening fitting

Series	Port size	Features	page
MJ	R(Rc)1/8 to 1/2	Tightening fitting	863
JL	Rc1/8, 1/4, 3/8, 1/2	Fitting	

■ Rotary fitting

Series	Port size	Features	page
RJF	M5, Rc1/8	Built-in bearing, High rigidity/ low sliding resistance, Number of circuits: 4/6/8/12/16	870

■ Fiber tube

● Antistatic (for push-in fitting)

Series	Bore size	Features	page
UP-9402-20-F1	ø1.8 x ø1.2	Extra-fine air tube with increased flow rate	884
PG	M3, M5, 1/8	Special push-in fitting	886

● Clean-room (for push-in fitting)

Series	Bore size	Features	page
EH-5802-20	ø1.8 x ø1.2	Clean-room specifications with highly corrosion-resistant material	884
CG	M3, M5, 1/8	Special push-in fitting for clean-room	890

● Flame resistance (for push-in fitting)

Series	Bore size	Features	page
UP-9102-20-*-SR	ø1.8 x ø1.0	Flame-resistant resin used	898
RG	M5, 1/8	Flame-resistant dedicated push-in fitting	899

● Antistatic

Series	Bore size	Features	page
UP-9102-20-F1	ø1.8 x ø1.0	Fitting dedicated for extra-fine air tube	877
PTN2	M3, M5, 1/8, ø3.2, ø4, ø6	Dedicated fitting	



Fittings/tubes

■ Antistatic tube

Series	Bore size	Features	page
UP-9***-F1/F2	3.2, 4, 6,8, 10, 12	Antistatic and dust-proof tube	903

■ Tube (F.U.KX.SR)

Series	Bore size	Features	page
F,U,NU,KX,SR	ø3.2 to ø15	Soft nylon, Urethane tube	906



Air blow nozzles

Series	Port size	page
BNE-F (flat type)	R 1/4	924
BNE-R (round type)		
BN (general)	R1/8, R1/4	926
BNB (Blower specification)	R1/8, R1/4	927

Air unit components P.931

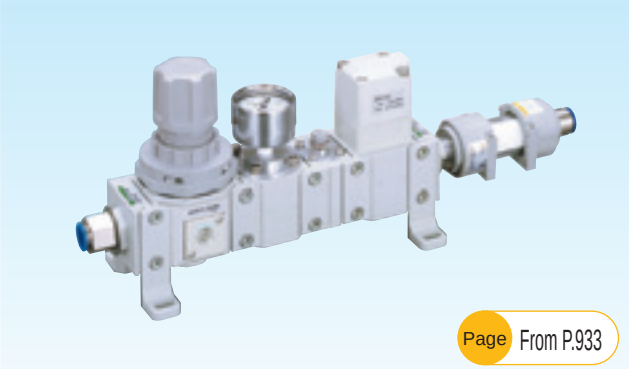
Page From P.933

Clean air unit

Series	Piping bore size	Features	Page
CAU30	ø10,ø12	Whole clean blow system in one unit	936


Page From P.947

Air unit

Customized air unit (Customized combinations)

Series	Features	Page
CXU10-UN-	Piping is not necessary. Layout is not limited. Reduces design processes.	956
CXU13-UN-		962
CXU30-UN-		958

Air unit custom-made products

Series	Features	Page
CXUZ-FL	Any air unit combination is possible as desired.	1005

Valve air unit

Series	Features	Page
CXU10-GEXA	A solenoid valve and regulator, etc., are connected and integrated into a unit. Piping work is reduced.	1008
CXU30-M4G2		1012

Single air unit

Series	Main applications	Page
NEW CXU30-VE	For air blow	1020
CXU10-EXA		1026
CXU10-FAB3		1028
CXU30-FAB4U		1030
CXU30-ADK	Main ON/OFF	1032
CXU30-4G2R	For driving cylinder	1034
CXU10-CHV	Reverse flow prevention	1040
CXU10-D4	4-way branch	1042
CXU30-D4		
CXU10-TA	Turning the module 90°	1044
CXU30-TA		
CXU10-MA	Masking the module	1045
CXU13-CA	Combination of 1000 Series and 3000 Series	1046
NEW CXU48-CA	Connecting 2000/3000/4000 Series and 6000/8000 Series	

2 Searching by product series

Select from external appearance and product description of each series.

NEW indicates models added to the 9th edition.

Precision components P.1069

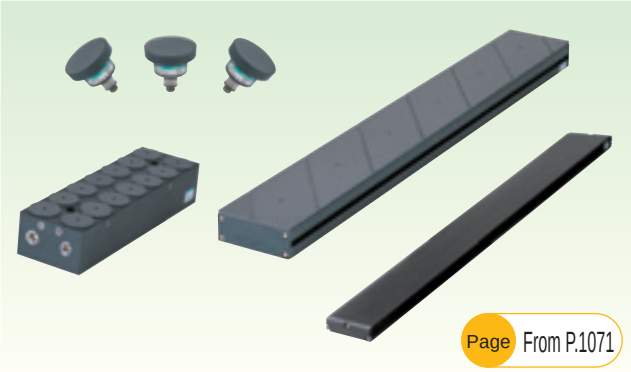

Page From P.1071

Glass float module GFM

Series	Features	Page
GFM-A (floating alignment pad)	Floating system for contactless, clean and damage-prevention transportation.	1074
NEW GFM-T (high floating rail)		1080
GFM-R (floating rail)		1084
GFM-P (precision floating stage)		1092

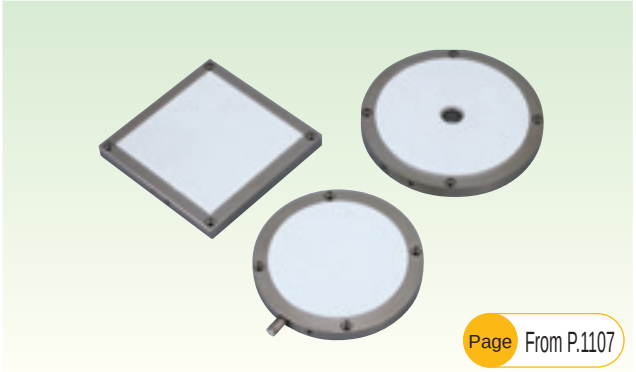

Page From P.1107

Precise suction plate

Series	Features	Page
PVP-R (donut shaped)	Precise suction plate with 40% porosity made from sintered fluorine resin porous body	1110
PVP-C (round)		
PVP-S (square)		



Page From P.1121

Magnetic spring buffer

■ Magnetic spring buffer

Series	Features	Page
FBU2-7D (spigot)	Magnetic springs with original cushioning mechanism used to achieve stable pressing force, low dust generation and long service life	1124
FBU2-8M (full thread)		
FBU2-12D (spigot)		
FBU2-12M (full thread)		
FBU2-SU (general purpose)		1130

Pressure sensors P.1141

Pressure sensor for air/coolant



Pressure sensor for air/coolant

Electronic pressure switch

■ Pressure switch

Series	Pressure range	Features	Page
PPX	-100 kPa to 1,000 kPa	Standard and high-function types are available. Twin display of present and set pressure values. 3-digit digital display	1148
PPD3-S	-100 kPa to 980 kPa	Stainless steel diaphragm sensor	1178
NEW PPG-D	-100 kPa to 100.0 kPa	Size □31 mm digital pressure sensor	1192
PPE	-100 kPa to 980 kPa	Sensor-amplifier integrated without display. Easy-to-install miniature body	1202
NEW PPEV	-100 kPa to 1.0 MPa	Compact shape 10 mm wide, high precision, high reliability	1208
PSW	-100 kPa to 980 kPa	Sensor/amplifier integrated without display	1212
NEW PPR	-100 kPa to 1.000 MPa	Modular F.R.L. dedicated for regulator mounting	1214

■ Mechanical pressure switch for coolant

Series	Port size	Features	Page
CPE	Rc1/4	Enables a wide pressure setting range of 0.05 to 0.8 MPa for coolant liquid through air	1340

■ Electronic pressure switch for coolant

Series	Pressure range	Features	Page
CPD	0 to 7 MPa	With sensor amplifier integrated display for coolants and other liquids	1342

Pneumatic pressure sensor

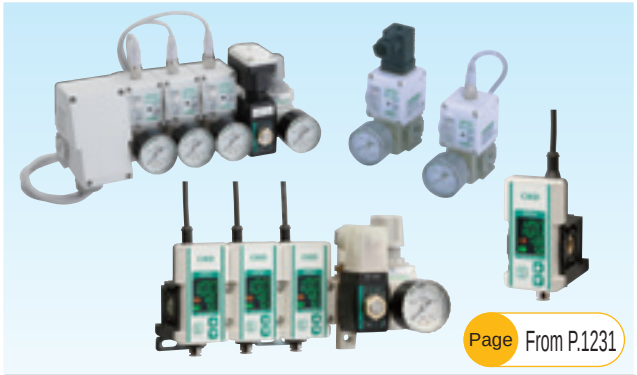

Pneumatic pressure sensor

Contact/close contact/cutting tool breakage detection switch

■ Contact confirmation switch (digital gap switch) NEW

Series	Detection range	Features	Page
GPS3	0.03 to 0.4 mm	Single unit	1240
MGPS3	0.03 to 0.4 mm	Manifold (2 to 6 stations)	1242
UGPS3	0.02 to 0.15 mm	Solenoid valve with needle, regulator integrated general purpose unit	1243

■ Contact confirmation switch (gap switch)

Series	Orifice size	Features	Page
GPS2	ø0.5,0.7	Single unit	1261
MGPS2	ø0.5,0.7	Manifold (2 to 5 stations)	1266
UGPS2	ø0.5,0.7	Solenoid valve with needle, regulator integrated general purpose unit	1270

■ Close contact confirmation switch

Series	Orifice size	Features	Page
HPS	ø0.5,0.7,1.0	Single unit	1276
MHPS	ø0.5,0.7,1.0	Manifold (2 to 5 stations)	1280
UHPS	ø0.5,0.7,1.0	Solenoid valve with needle, regulator integrated general purpose unit	1284

■ Cutting tool breakage detection switch

Series	Orifice size	Features	Page
TLPS	ø0.3	Single unit	1290
MTLPS	ø0.3	Manifold (2 to 5 stations)	1294
UTLPS	ø0.3	Solenoid valve with needle, regulator integrated general purpose unit	1298

2 Searching by product series

Select from external appearance and product description of each series.

NEW indicates models added to the 9th edition.

Pressure sensors P.1141

Pneumatic pressure sensor



Page From P.1317

Pneumatic pressure sensor

Air sensor (PEL system)

■ Switching element

Series	Fixed orifice size	Features	Page
APA1	None to 1.4 mm	Stable detection with ultra-fine pressure	1318

■ Switching element/manifold

Series	Number of elements	Features	Page
APA3	2,3,4,5	Compact system thanks to manifold	1318

■ Detection nozzle

Series	Nozzle port size	Features	Page
APA4-BA	0.3 to 2.0 mm	For gauge	1321
APA4-DA	1,2 mm	Back pressure	
APA4-VS	1 mm	Reflection	
APA4-GA	1,2,3.2 mm	Detecting	

■ PL switch

Series	Features	Page
PL	PEL switching element and electric wire connection terminal, pneumatic pipe connection terminal or power circuit are stored in a box.	1324

■ SEPEL switch

Series	Differential pressure	Features	Page
DPS	5 kPa	Fine differential pressure switch that combines a pneumatic bridge and electrical comparator circuits	1330

■ Related products (filter)

Series	Features	Page
K-005	Related products when air sensor is used	1332

■ Related products (piping fixture)

Series	Features	Page
APA6	Related products when air sensor is used	1334



Page From P.1353

Multi-monitor

■ Multi-monitor

Series	Flow rate/pressure range	Unit	Page
MD	−100 to 980	MPa,KPa, mL/min,L/min m^3/min	1354

Sensor/Controller components P.1359

Flow rate sensor for air



Page From P.1361

Flow rate sensor for air

Small size flow rate sensor RAPIFLOW FSM3, FSM

■ High-precision/high-speed response, integrated display/separated display FSM3

Series	Flow range uni-direction/bi-direction	Features	Page
FSM3-□005	0 to 500/-500 to 500 mL/min	High precision.	1367
FSM3-□010	0 to 1000/-1000 to 1000 mL/min	High-speed response.	
FSM3-□020	0 to 2.00/-2.00 to 2.00 L/min	Integrated needle valve.	
FSM3-□050	0 to 5.00/-5.00 to 5.00 L/min	Display separated is	
FSM3-□100	0 to 10.00/-10.00 to 10.00 L/min	available.	
FSM3-□200	0 to 20.0/-20.0 to 20.0 L/min	Rotatable LCD display.	
FSM3-□500	0 to 50.0/-50.0 to 50.0 L/min	Panel mounting is	
FSM3-□101	0 to 100.0/-100.0 to 100.0 L/min	supported.	
FSM3-□201	0 to 200/-200 to 200 L/min	Unrestricted mounting	
FSM3-□501	0 to 500/-500 to 500 L/min	orientation.	
FSM3-□102	0 to 1000/-1000 to 1000 L/min	Variety of fitting variations.	

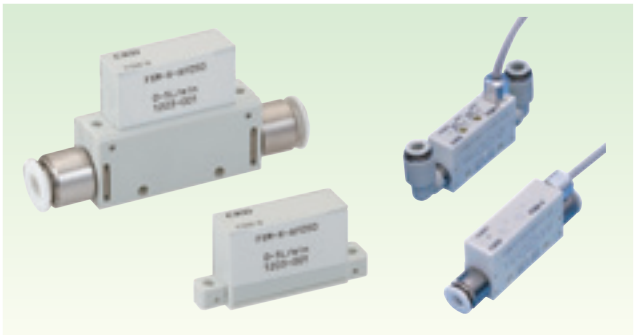

■ Miniature/ultra-high-speed response Analog output FSM-X

Series	Flow range uni-direction/bi-direction	Features	Page
FSM-X-A□005	0 to 0.5/-0.5 to 0.5 L/min	Compact body enabled by separating the sensor head.	1454
FSM-X-A□010	0 to 1/-1 to 1 L/min		
FSM-X-A□050	0 to 5/-5 to 5 L/min		
FSM-X-A□100	0 to 10/-10 to 10 L/min		

■ Miniature analog output/switch output FSM-V

Series	Flow rate range	Features	Page
FSM-V-□-R0005	-0.05 to +0.05 L/min	Easy measurement of forward and reverse flow. Ideal for detection control of vacuum suction and vacuum burst.	1460
FSM-V-□-R0010	-0.1 to 0.1 L/min		
FSM-V-□-R0050	-0.5 to 0.5 L/min		
FSM-V-□-R0100	-1 to 1 L/min		
FSM-V-□-R0500	-5 to 5 L/min		
FSM-V-□-R1000	-10 to 10 L/min		

■ Miniature inline filter FSM-VFM

Series	Port size	Features	Page
FSM-VFM	ø1.8,ø4,M5	Inline filter dedicated for miniature and space saving FSM Series	1482

Flow rate controller for air



Page From P.1491

Flow rate controller for air

Compact flow rate controller RAPIFLOW FCM

■ Standard model

Series	Flow rate range	Features	Page
FCM-9500	0 to 0.5 L/min	Compact, high-speed and multifunctional flow rate controller. Applicable fluids are air, nitrogen, argon, oxygen, city gas, methane, propane, hydrogen and helium.	1496
FCM-0001	0 to 1 L/min		
FCM-0002	0 to 2 L/min		
FCM-0005	0 to 5 L/min		
FCM-0010	0 to 10 L/min		
FCM-0020	0 to 20 L/min		
FCM-0050	0 to 50 L/min		
FCM-0100	0 to 100 L/min		

■ Low differential pressure model

Series	Flow rate range	Features	Page
FCM-L9500	0 to 0.5 L/min	Suitable for controlling burner flame or other combustion gases with low supply pressure.	1496
FCM-L0001	0 to 1 L/min		
FCM-L0002	0 to 2 L/min		
FCM-L0005	0 to 5 L/min		
FCM-L0010	0 to 10 L/min		

Flow rate sensor for air



Page From P.1529

Flow rate sensor for air

Pneumatic flow rate sensor (FLUEREX)

■ Separated display PFD

Series	Flow rate range	Features	Page
PFD-501	25 to 500 L/min (normal)	Flow rate detection of compressed air with total accuracy ±4% F.S.	1534
PFD-102	50 to 1000 L/min (normal)		
PFD-202	100 to 2000 L/min (normal)		
PFD-402	200 to 4000 L/min (normal)		
PFD-802	400 to 8000 L/min (normal)		
PFD-163	800 to 16000 L/min (normal)		

■ Separated display tester kit PFK

Series	Flow rate range	Features	Page
PFK-501	25 to 500 L/min (normal)	Equipment for measuring the air flow rate is provided in a kit, which enables immediate measurements on site.	1540
PFK-102	50 to 1000 L/min (normal)		
PFK-202	100 to 2000 L/min (normal)		
PFK-402	200 to 4000 L/min (normal)		
PFK-802	400 to 8000 L/min (normal)		

2 Searching by product series

Select from external appearance and product description of each series.

NEW indicates models added to the 9th edition.

Sensor/Controller components P.1359

Flow rate sensor for water



NEW

Listed page From P.1553

Flow rate sensor for water (FLUEREX flow sensor)

■ Karman's vortex

Series	Flow rate measured range	Features	page
WFK2-005	0.4 to 5 L/min	Wide flow rate measured range IO-Link Configuration Various settings available Equipped with multiple functions	1556
WFK2-020	1.6 to 20 L/min		
WFK2-050	4.0 to 50 L/min		
WFK2-100	8.0 to 100 L/min		
WFK2-250	20 to 250 L/min		



NEW

Listed page From P.1571

Capacitance electromagnetic flow sensor

■ Capacitance

Series	Flow rate measured range	Features	page
WFC-150	0.5 to 15L/min	Water flow sensor optimized for FA applications	1574
WFC-600	2.0 to 60L/min		

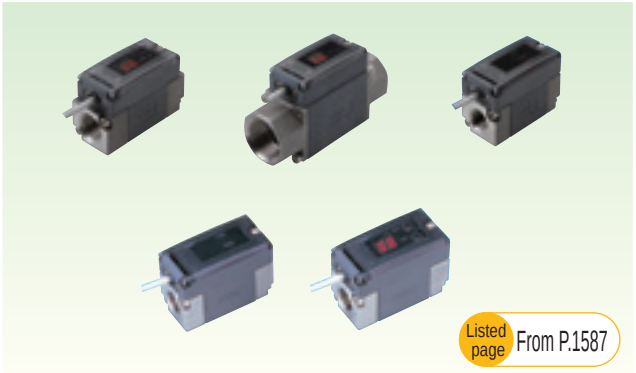

Listed page From P.1587

Flow rate sensor for water

■ Karman's vortex

Series	Flow rate measured range	Features	page
WFK3000	0.5 to 40, 1.5 to 12 L/min	Compact/device built-in	1592

Total air systems P.1605

Total air control systems (Total Air system)



Page From P.1607

Total air control systems (Total Air system)

Detector

■ Compact mechanical valve

Series	Port size	Features	Page
MS	ø4,Rc1/8	Compact, large flow	1612

■ Medium mechanical valve

Series	Port size	Features	Page
MM	ø4,Rc1/8	Without intermediate bleeding	1626

■ Large mechanical valve

Series	Port size	Features	Page
MAVL	Rc1/4	Pressurized from 3 directions, and used as NO, NC, or distributor	1638

Total air control systems (Total Air system)

Circuit device

Page From P.1643

■ Air timer

Series	Working pressure range	Features	Page
RTD-3A	0.25 to 0.8 MPa	Delay time max. 30 sec.	1644

■ Pressure switch

Series	Working pressure range	Features	Page
PE-1	0.2 to 0.7 MPa	ø4 nylon tube used for piping	1645

■ Air lamp

Series	Working pressure range	Features	Page
AL-*	0.05 to 0.8 MPa	ø4 nylon tube used for piping	1645

■ Compact air lamp

Series	Working pressure range	Features	Page
SAL-*	0.25 to 0.8 MPa	Insert into ø4 push-in fitting	1646

Total air control systems (Gamma system)



Page From P.1649

Total air control systems (Gamma system)

PLC components

Series	Type	Page
PS*	Sequencer	1652
PR*,PL*	Relay	1653
PZU	Relay sub-base	1654
PL*	Integrated (logic element)	1656
PL*,PZM	Line type (logic element)	1657

Total air control systems (Gamma system)

Signal control components

Page From P.1658

Series	Type	Page
PXV	Air lamp	1658
PR*,PX*	Element and sensor	1659
PXB-B	Push button switch and switch body (separated)	1660
ZB4	Switch head	1661
PXC	Miniature limit switch	1662
PXC	Compact limit switch	1663
PXC	Limit switch	1666
ZCK	Rotary head lever actuator	1667

Gas generator P.1673



Gas generator

Nitrogen gas extraction unit

■ System

Series	Port size (Rc, G, NPT)	Features	Page
NSU	3/8	Easily and stably supplying nitrogen gas	1682

■ Unit

Series	Port size (Rc, G, NPT)	Features	Page
NS	3/8,3/4,1	Extracts nitrogen gas just by supplying compressed air	1688



Gas generator

Inline oxygen monitor

■ Inline oxygen monitor

Series	Port size (Rc, G, NPT)	Features	Page
PNA	3/8	Measures oxygen concentrations while pressurized	1702

Main line unit P.1707

Contents/P.1707
Series variation/P.1712



Page From P.1721

Main line unit

Refrigeration air dryer

Xeroaqua dryer

■ Xeroaqua dryer GX Series ● Index/P.1731

Series	Applicable air compressor	Features	Page
GX3200D	2.2 kW to 55 kW	For assembling device, standard inlet air (35°C)	1738
GX5200D	2.2 kW to 55 kW	For direct compressor connection, high temperature inlet air (55°C)	1742

■ Xeroaqua dryer GT9000 Series ● Index/P.1753

Series	Applicable air compressor	Features	Page
GT9000 (D)	90 kW to 450 kW	Standard inlet air (40°C), air-cooling	1760
GT9000W (D)	90 kW to 450 kW	Standard inlet air (40°C), water-cooling	1768
GT9000WV2	710 kW/960 kW	Standard inlet air (40°C), inverter-controlled water cooling	1776

Contents/P.1707
Series variation/P.1788



Page From P.1785

Main line unit

Desiccant air dryer

Heatless dryer

■ Compact heatless dryer

Series	Processing air flow rate	Features	Page
HD-**	75 to 1235 L/min(ANR)	Stable supply of ultra dry air with atmospheric dew point -72°C.	1792

■ Super heatless dryer

Series	Processing air flow rate	Features	Page
SHD	2.5 to 24 m^3/min	Purge flow rate is minimized with the energy-saving dew point monitor.	1796

Manual air dryer

■ Manual air dryer

Series	Processing air flow rate	Features	Page
4001 4002	280 L/min (ANR) or less	Disposable desiccant, supporting low pressure	1803

Main line unit P.1707

Contents/P.1707
Series variation/P.1712



Main line unit

High polymer membrane air dryer

Super dryer (High polymer membrane air dryer)

Series	Processing air flow rate	Features	Page
Super dryer (High polymer membrane air dryer)			
SD300E-W	75 to 450 L/min(ANR)	A high capacity dryer that can be used like a filter, producing ultra-dry air easily and stably. Filter/regulator unit is available.	1814
SD400E-W			
SD300D-W	125 to 750 L/min(ANR)		1818
SD400D-W			
SD3000	35 to 890 L/min(ANR)		1825
SD4000			
Super dryer conbimation			
SU300E-W	75 to 450 L/min(ANR)	A high capacity dryer that can be used like a filter, producing ultra-dry air easily and stably. Filter/regulator unit is available.	1814
SU400E-W			
SU300D-W	125 to 750 L/min(ANR)		1818
SU400D-W			
SU3000-W	35 to 890 L/min(ANR)		1822
SU4000-W			
SDM4000	1.36 to 12.4 m^3/min(ANR)	Large flow rate achieved with polymer separation membrane	1828

Contents/P.1707
Series variation/P.1836



Main line unit

Main line filter

Medium main line filter

Series	Processing air flow rate	Features	Page
Regular			NEW
AF2-□P	4.95 to 24.1 m^3/min (ANR)	Solids/oil removing filter	1845
AF2-□M		High-perf. solids/oil removing filter	
AF2-□X		Odor removing filter	
For oil-prohibited			
AF4000P	3.7 to 18.8 m^3/min(ANR)	Pre-filter	1855
AF4000S		Solid removing filter	
AF4000M		Oil mist removing filter	
AF4000X		Deodorizing filter	

Large main line filter

Series	Processing air flow rate	Features	Page
Regular			
AF3000P	16 to 256 m^3/min(ANR)	Pre-filter	1870
AF3000S		Oil removing filter	1872
AF3000M		High-performance oil removing filter	1874
AF3000X		Deodorization (activated carbon) filter	1876
For oil-prohibited			
AF5000P	16 to 256 m^3/min(ANR)	Pre-filter, stainless steel vessel used	1884
AF5000S		Oil removal filter, stainless steel vessel used	1888
AF5000M		High-performance oil removal filter, stainless steel vessel used	1892
AF5000X		Deodorization (activated carbon) filter, stainless steel vessel used	1896

Contents/P.1707
Series variation/P.1904



Main line unit

Drain discharger

Automatic drain

Series	Compatible compressor	Features	Page
DT3000-W	0.75 to 15 kW	Lightweight and compact automatic drain discharger	1908
DT4000-W	0.75 to 75 kW		
DT3010-W	15 kW or less		
DT4010-W	75 kW or less		

Heavy duty drain

Series	Port size	Features	Page
5100	Rc1/2	Ideal for circuits generating a lot of moisture	1922

Automatic drain

Series	Port size	Features	Page
DB1000	G1/2"	Highly reliable liquid level sensor with compressor discharge flow rate of 1.5 to 1000 m^3/min (ANR) is used	1916
DB3000			
DBS1006	G1/2"	High-reliability level sensor detects the entry of drainage into the pneumatic circuit.	1919

Guide to model changes

The series listed in this catalog has undergone a model changeover with this new series. Consider this new series when making selections.

■ Electronic pressure switch

PPD, PPD-A

Old series



■ Electronic pressure sensor with digital display

PPG-D

New series



■ Electronic pressure switch/stainless steel diaphragm sensor

PPD-S

Old series



■ Electronic pressure switch with digital display

PPD3-S

New series



■ Medium main line filter

AF2000

Old series



■ Medium main line filter

AF2

New series



Recommended alternative products

Production and catalog listing of the series below have been discontinued. Select recommended alternative products instead.

Discontinued	Recommended alternative product	Page
Refrigeration air dryer GX5200	**Refrigeration air dryer** **GX5200D Series / GX5255 / GX5275**	**1742**
Refrigeration air dryer GK3100	**Refrigeration air dryer** **GX3200D Series**	**1738**
Refrigeration air dryer GX3200	**Refrigeration air dryer** **GX3200D Series**	**1738**
Refrigeration air dryer GX5100	**Refrigeration air dryer** **GX5200D Series / GX5255 / GX5275**	**1742**
Refrigeration air dryer GX5200	**Refrigeration air dryer** **GX5200D Series / GX5255 / GX5275**	**1742**
Refrigeration air dryer GX5200	**Refrigeration air dryer** **GX5200D Series / GX5255 / GX5275**	**1742**
Desiccant air dryer 4112 to 4132*C	**Desiccant air dryer** **SHD Series**	**1796**
Automatic drain DB3002E	**Automatic drain** **DB3003-D**	**1916**
Drain discharger B5102	**Drain discharger** **DT3000**	**1906**
Medium main line filter (1 µm or equivalent class) AF2000P Series	**Medium main line filter (1 µm or equivalent class)** **AF2-□P**	**1845**
Medium main lineFilter (class equivalent to 0.01 µ) AF2000M Series	**Medium main line filter (0.01 µm equivalent class)** **AF2- □ M**	**1845**
Medium main line filter (deodorizing or equivalent class) AF2000X Series	**Medium main line filter (deodorizing or equivalent class)** **AF2- □ X**	**1845**
Large main line filter (3 µm or equivalent class) 1113-MD,1114-MD,1123-MD,1128-MD	**Large main line filter (3 µm or equivalent class)** **AF3000P Series**	**1870**
Large main line filter (0.3 µm or equivalent class) 1113-MD,1151 to 1158-MD	**Large main line filter (0.3 µm or equivalent class)** **AF3000 Series**	**1872**
Large main line filter (0.01 µm or equivalent class) 1251 to 1258MD	**Large main line filter (0.01 µm or equivalent class)** **AF3000M Series**	**1874**
Large main line filter (deodorizing or equivalent class) 1251-MX to 1258-MX	**Large main line filter (deodorizing or equivalent class)** **AF3000X Series**	**1876**

Recommended alternative products

Model No. change table

Discontinued		Recommended alternative product	Page
F.R.L separated (filter 5 µm, 0.3 µm class)		**F.R.L. modular design (filter 5 µm, 0.3 µm class)**	**106**
1144	→	**F2000 F3000**	
1137		**F4000 F6000**	
F.R.L separated (oil mist filter 0.01 µm class)		**F.R.L. modular design (oil mist filter 0.01 µm class)**	**116**
1244		**M2000**	
1237		**M3000 M4000**	
F.R.L separated (regulator) standard		**F.R.L. modular design (regulator) standard**	**136**
A2000		**R2000**	
2001		**R4000 R6000**	
F.R.L separated (regulator) reverse		**F.R.L. modular design (regulator) reverse**	**144**
2400		**R2100**	
2401		**R4100 R6100**	
F.R.L separated (precision regulator)		**F.R.L. modular design (precision regulator)**	**512**
2100		**RPE1000**	
F.R.L separated (lubricator, econo-mist)		**F.R.L. modular design (lubricator)**	**152**
3000E		**L3000 L4000**	
3002E		**L4000 L8000**	
F.R.L separated (F.R.L. combination)		**F.R.L. modular design (F.R.L. combination)**	**34**
K61440E		**C2000**	
K61400E		**C3000 C4000 C6500**	
F.R.L separated (filter/regulator)		**F.R.L. modular design (filter/regulator)**	**90**
A7070		**W2000 W3000**	
7080		**W4000 W8000**	
7170-2C 7170-2C-J		**F1000-8-W,RP1000-8,J100-W**	**106,518,347**
7170-3C 7170-3C-J		**F1000-8-W,RP1000-8,J100-W,A100-10-W**	**106,518,350**
Drain discharger		**Drain discharger**	**1906**
B5102		**DT3000**	
Regulator for water		**Regulator for water**	**430**
B2519		**WR**	
F.R.L separated (lubricator, atomist)		**We regret that no alternative product is available.**	**-**
3500/3502/3503			
F.R.L separated (lubricator, auto-fill)			
3002E-V			
F.R.L separated (lubricator with check valve)			
3202			
Recycle lube			
1644/1637			
Posi-Lube			
3611			
Oil recovery pump			
6520			

Guide to CKD's CAD data

How to use CKD's CAD data

CKD's CAD data is provided as follows for your use in CAD design.

2D CAD data



Types of compatible CAD
· DXF
· Dedicated CAD

3D CAD data

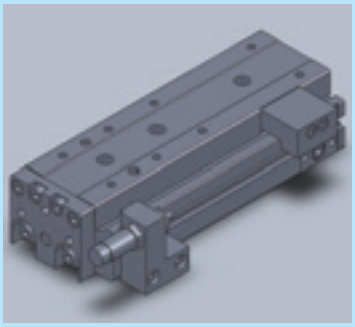

Types of compatible CAD
· DXF
· IGES
· SAT
· Parasolid
· Dedicated CAD

Homepage

Catalog PDFs and CAD data of CKD products are available for download.

https://www.ckd.co.jp/en/

For PDF and DXF data of the general catalogs

CKD Website Component Products > Materials: Download digital catalogs/catalog PDFs

For PDF and DXF data of new products

CKD Website Component Products > Search for a product from the product list

For 2D/3D CAD data

CKD Website Component Products > Materials: Download 2D CAD data/3D CAD data

Guide to the model selection system

How to use the model selection system

The CKD system supports selection of the following items.
For your use during model selection and design.

Available on our website

This system is used to select products according to your application and working conditions.



*Downloading Software may not be possible due to your security settings. If that is the case, contact CKD.

Selection results are linked with catalog PDFs and CAD data!

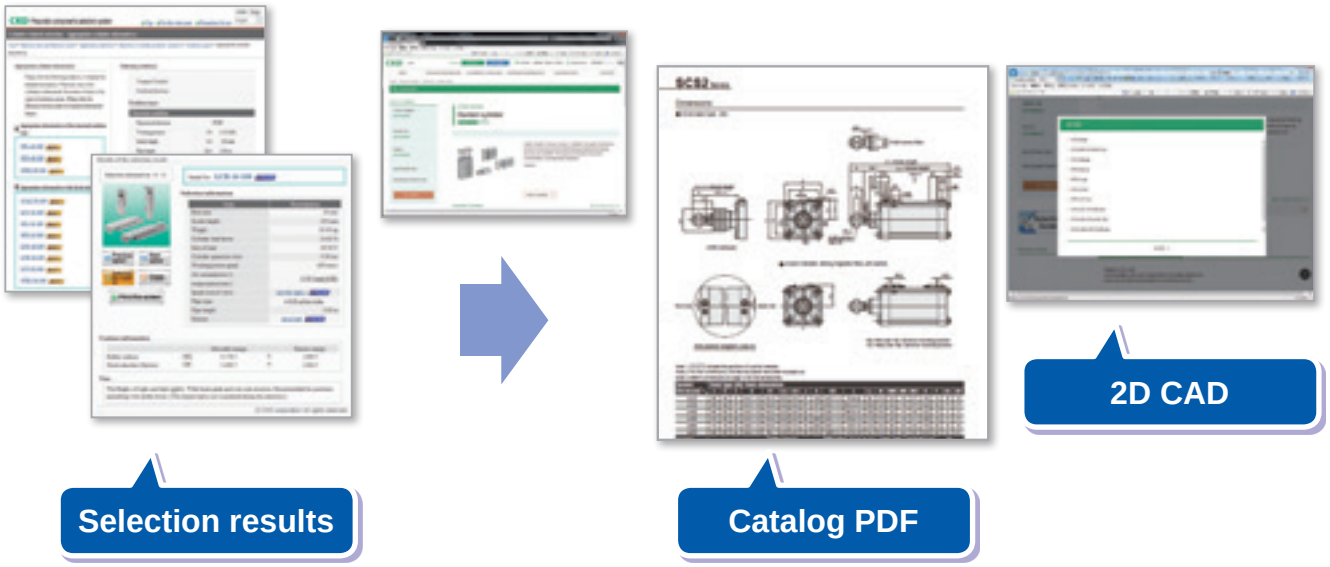

Registration not required - available at any time!

A variety of services such as CKD product catalogs, PDFs, CAD data, and model selection are available. Feel free to try them.

https://www.ckd.co.jp/en/

3 Search by specifications and variation

Copper and PTFE free

Pneumatic components for cathode ray tube manufacturing lines.

Series/model series name			Port size	Remarks	Page
F.R.L. unit	C**00-W -TP6	F.R.L. combination	Rc1/8 to Rc1		312
	C**10-W -TP6	W.L. combination	Rc1/8 to Rc1		312
	C**20-W -TP6	F.R. combination	Rc1/8 to Rc1		312
	C**30-W -TP6	F.M.R. combination	Rc1/8 to Rc1		312
	C**40-W -TP6	W.M. combination	Rc1/8 to Rc1		312
	C**50-W -TP6	R.M. combination	Rc1/8 to Rc1		312
	C*060-W	F.M. combination	Rc1/8 to Rc1	Copper and PTFE free as standard	72
	C*070-W	F.F.M. combination	Rc1/4 to Rc1	Copper and PTFE free as standard	78
	W*000-W -TP6	Filter/regulator	Rc1/8 to Rc1		313
	W*100-W -TP6	Reverse filter/regulator	Rc1/8 to Rc1		314
	F*000-W	Air filter	Rc1/8 to Rc1	Copper and PTFE free as standard (Refer to model No.)	315
	M*000-W	Oil mist filter	Rc1/8 to Rc1	Copper and PTFE free as standard (Refer to model No.)	316
	R*000-W -TP6	Regulator	Rc1/8 to Rc1		317
	R*100-W -TP6	Reverse regulator	Rc1/8 to Rc1		318
	L*000-W	Lubricator	Rc1/8 to Rc1	Copper and PTFE free as standard	319
	V*000-W	Residual pressure exhaust valve	Rc1/8 to Rc1/2	Copper and PTFE free as standard	182
	P*100-W -P6	Mechanical pressure switch (reed compact pressure switch)	Rc1/8 to Rc1		168
Pneumatic auxiliary components	G49D -P6	General-use pressure gauge	R1/8		320
	G59D -P6	General-use pressure gauge	R1/4		320
	FA*31	Exhaust cleaner	Rc3/8 to Rc2	Copper and PTFE free as standard	778
	SC -*	Miniature speed controller	M3,M5	Copper and PTFE free as standard	742
	SC3W -P6	Speed controller, elbow	M3 to R1/2		716
	SC3U -P6	Speed controller, universal	M3 to R1/2		720
	SC1 -P6	Speed controller	Rc1/8 to Rc1/2		748
	SLW	Silencer	R1/8 to R1/2	Copper and PTFE free as standard	764
	SL	Silencer	R1/4 to R1	Copper and PTFE free as standard	764
	F	Miniature fitting	M3 to Rc(R)1/8	Copper and PTFE free as standard	816
	GW -P6	Fitting	M3 to R1/2		824
	F.U.NU.KX.SR	Tube	ø3.2 to ø15	Copper and PTFE free as standard	906

Ozone-proof specification product

	Series/model series name		Port size	Remarks	Page
F.R.L. unit	W*000-W -P11	Filter/regulator	Rc1/8 to Rc1/2		Ending Page 10
	W*100-W -P11	Reverse filter/regulator	Rc1/8 to Rc1/2		Ending Page 11
	F*000-W	Air filter	Rc1/8 to Rc1	Supported as standard	106
	R*000-W -P11	Regulator	Rc1/8 to Rc1/2		Ending Page 12
	R*100-W -P11	Reverse regulator	Rc1/8 to Rc1		Ending Page 13
	RB500 -P11	Compact regulator	Push-in fitting ø4, ø6		Ending Page 14
	MNRB500	Block manifold regulator	Push-in fitting ø4, ø6, ø8		Ending Page 15
	V*000-W	Residual pressure exhaust valve	Rc1/8 to Rc1/2	Supported as standard	182
	VFA	Vacuum filter and regulator	Rc1/8 to Rc1/2	Supported as standard	530
	B2019 -P11	Regulator	Rc1/8,Rc1/4		Ending Page 16
	2415 -P11	Reverse regulator	Rc3/4,1,1 1/2		Ending Page 17
	ABP-P11	Air booster	Rc1/2	Made-to-order product	678
	P*100-W	Mechanical pressure switch (reed compact pressure switch)	Rc1/8 to Rc1/2 Rc1/8 to Rc1/2	Supported as standard	168
	P4000-W	Pressure switch		Supported as standard	166
Pneumatic auxiliary components	SC3W-P11	Speed controller, elbow	M3 to R1/2		716
	SC1-X1	Speed controller, medium bore size	Rc1/8 to Rc1/2		748
	SC3R -P11	Speed controller direct piping/elbow	M5 to Rc1/2		740
	SLM	Miniature silencer	M3,M5	Supported as standard	771
	SLW	Silencer	Rc1/8 to Rc1/2	Supported as standard	764
	F -P11	Miniature fitting	M3 to Rc1/8		816
	GW -P11	Fitting	M3 to R1/2		824
	ZW -P11	Fitting (stainless steel)	M5 to R1/2		838
	ZJ	Tightening fitting stainless steel series	Rc1/8 to Rc1/2	Supported as standard	857
	F.U.KX	Tube	ø3.2 to ø15	Supported as standard	906

Note: For details, refer to “Ozone-proof” on Ending Page 5.

3 Search by specifications and variation

Specifications for rechargeable battery

NEW Pneumatic components exclusively for materials which can be used in the rechargeable battery manufacturing process.

	Series/model series name		Port size	Remarks	Catalog No./page
F.R.L. unit	2QV	Quick valve	ø4 to ø12		CC-1226A Refer to "Components for rechargeable battery production P4* Series" catalog.
	APS -P4	Compact mechanical pressure switch	Rc1/8		
	EVD -P4	Electro pneumatic regulator	Rc1/4,Rc3/8		
	F*000 -W -P4	Filter	Rc1/8 to Rc1		
	G40D -P4	Pressure gauge with safety marker	R1/8		
	G41D -P4	Pressure gauge with limit marker	R1/8,R1/4		
	G49D -P4	General-use pressure gauge	R1/8		
	G59D -P4	General-use pressure gauge	R1/4		
	M*000 -W -P4	Oil mist filter	Rc1/8 to Rc1		
	P4100 -P4	Pressure switch	R1/4 to Rc1/2		
	R*000 -W -P4	Regulator	Rc1/8 to Rc1		
	R*100 -W -P4	Reverse regulator	Rc1/8 to Rc1		
	RB500 -P4	Compact regulator	ø4/ø6		
	RP*000 -P4	Precision regulator	Rc1/4,Rc3/8		
	V30*0 -P4	Residual pressure exhaust valve	Rc1/4 to Rc1/2		
	V6010 -P4	Residual pressure exhaust valve	Rc3/4,Rc1		
	VFA*000 -P4	Vacuum filter and regulator	Rc1/8 to Rc1/2		
	VRA2000 -P4	Vacuum regulator	Rc1/4,Rc3/8		
	W*000 -W -P4	Filter/regulator	Rc1/8 to Rc1		
	W*100 -W -P4	Reverse filter/regulator	Rc1/8 to Rc1		
Pneumatic auxiliary components	DSC -P4	Speed controller with adjusting dial	M5,R1/8 to R1/2		
	ET	Fluoro resin tube	O.D.: 4, 6, 8, 10, 12 mm		
	PFH,PFS -P4	Polyolefin tube	O.D.: 4, 6, 8, 10, 12 mm		
	SC3W -P4	Speed controller, elbow	M3,M5,R1/8 to R1/2		
	SC3F -P4	Speed controller, elbow	M3,M5,R1/8 to R1/2		
	SCL2 -P4	Speed controller Line type	ø4 to ø10		
	SCD2 -P4	In/out speed controller Inline	ø4 to ø10		
	SCLF -P4	PP type Speed controller Line type	ø4 to ø12		
	ZSF -P4	Fitting (polyprene resin)	ø4 to ø12		
	ZW -P4	Fitting (stainless steel)	ø4 to ø12		
Press sensor Device	PPX -P40	Digital pressure sensor	Rc1/8,M5		
Main line unit	SD*00D/E -W -P4	Super dryer (High polymer membrane air dryer)	Rc3/8		
	SD*000 -W -P4	Super dryer (High polymer membrane air dryer)	Rc3/8,Rc1/2		
	SU*00D/E -W -P4	Super dryer (High polymer membrane air dryer)	Rc3/8		
	SU*000 -W -P4	Super dryer (High polymer membrane air dryer)	Rc3/8,Rc1/2		

Clean-room specifications

Anti-dust generation pneumatic components usable in clean rooms.

	Series/model series name		Port size	Remarks	Catalog No./page
F.R.L. unit	W*000-W -P7*	Filter/regulator	Rc1/8 to Rc1/2		CB-033SA*
	W*100-W -P7*	Reverse filter/regulator	Rc1/8 to Rc1/2		
	F *000-W -P7*	Air filter	Rc1/8 to Rc1		
	M*000-W -P7*	Oil mist filter	Rc1/8 to Rc1		
	R *000-W -P7*	Regulator	Rc1/8 to Rc1		
	R *100-W -P7*	Reverse regulator	Rc1/8 to Rc1		
	FCS500 -P9*	Inline clean filter	ø4 to ø8,Rc1/8,Rc1/4		
	FCS1000-P9*	Inline clean filter	ø8 to ø12,Rc1/4,Rc3/8,Rc1/4,Rc3/8		
	FAC	Clean exhaust filter	ø4 to ø10,R1/8 to R1/2,Rc3/8,Rc1/2		
	RC2000 -P90	Clean regulator	Rc1/4 to Rc1/2		
	2619 -P80/P9*	Regulator	Rc1/8,Rc1/4		
	RP*000 -P70	Precision regulator	Rc1/4,Rc3/8		
	G49D-6 -P70/P9*	General-use pressure gauge	R1/8		
	G59D-8 -P70/P9*	General-use pressure gauge	R1/4		
	GA400-8 -P90	Differential pressure gauge	Rc1/4		
Pneumatic auxiliary components	F -P80	Miniature fitting	M3 to Rc1/8		CB-033SA*
	GW -P7*/P80	Fitting	M3 to R1/2		
	GWJ -P7*/P80	Fitting small size	M3 to Rc(R)1/8		
	ZW -P80	Fitting (stainless steel)	M5 to R1/2		
	ZJ -P90	Fitting (stainless steel) series	R1/8 to R1/2		
	SC3R -P7*	Speed controller direct piping/elbow	M5 to Rc1/2		
	SC3W -P7*	Speed controller, elbow	M3 to R1/2		
	SC1 -P7*	Speed controller, medium bore size	Rc1/8 to Rc1/2		
	SCL2 -P7*	Speed controller Line type (with push-in fitting)	ø1.8 to ø12		
	SCD2 -P7*	In/out speed controller Inline (with push-in fitting)	ø1.8 to ø12		
	SCL2 -N -P7*/P80	Needle valve (with push-in fitting)	ø4 to ø8		
	CHL -P7*	Compact check valve with push-in fitting	M5,ø4,ø6		
	CHV2 -P7*/P80	Check valve	Rc1/8 to Rc1 1/2		
	2QV -P70	Quick valve	ø4 to ø12,R1/8 to R1/2		
	UP -9102 -P80	Fiber tube	ø1.8		
	UP -9*** -P80	Antistatic tube	ø3.2 to ø12		
	NU -P80	New urethane tube	ø3.2 to ø12		

* Refer to “Components for clean room specifications” in catalog No. CB-033SA.

3 Search by specifications and variation

Clean-room specifications

Anti-dust generation pneumatic components usable in clean rooms.

Series/model series name			Port size	Remarks	Catalog No./page
Press sensors	PPD3 -P7*/P8*	Electronic pressure switch	Rc1/8, ø6 push-in fitting		CB-033SA*
	PPD3 -S -P7*/P8*/P9*				
	PPE -P70/P80	Compact electronic pressure switch	R1/8, ø6 push-in fitting		
Sensor/ Controller	FSM3 -P70/P80	Small size flow rate sensor RAPIFLOW	ø1.8,ø4,ø6,Rc1/8, Rc1/4,M5		
Electro pneumatic regulator	EV2000 -P7*/P8*	Electro pneumatic regulator	Rc1/4		
	EV0000 -P7*/P8*		M5		
	EVS -P7*/P8*		M5		
	EV2100V-P70	Electro pneumatic regulator	Rc1/4		
	MEVT -P7*/P8*	Thin electro pneumatic regulator	ø4, ø6 push-in fitting		

* Refer to “Components for clean room specifications” in catalog No. CB-033SA.

Electronic pneumatic components (proportional pressure control)

Proportional pressure control is the generic name for electronic pneumatic pressure application components.

Series/model series name			Properties	Remarks	Page
Pressure control	EVD-1*00	Digital electro pneumatic regulator	Max. flow rate 400 (ℓ /min)	Pressure control	586
	EVD-3*00	Digital electro pneumatic regulator	Max. flow rate 1500 (ℓ /min)	Pressure control	590
	EVR	Electro pneumatic regulator	Max. flow rate 800 (ℓ /min)	Pressure control	610
	EV2100V	Electro pneumatic regulator	Max. flow rate 120/150 (ℓ /min)	Pressure control (vacuum)	625
	EVS2	Electro pneumatic regulator	Max. flow rate 2/6 (ℓ /min)	Pressure control	622
	MEVT	Thin electro pneumatic regulator	Max. flow rate 2/6 (ℓ /min)	Pressure control	638
Pressure detection	PPX	Electronic pressure switch (pressure switch)	Pneumatics/vacuum pressure	With sensor, amp, display integr.	1148
	PPG-D		Pneumatics/vacuum pressure	With sensor, amp, display integr.	1192
	PSW		Pneumatics/vacuum pressure	With sensor, amp, display non-integr.	1212
	PPE		Pneumatics/vacuum pressure	With sensor, amp, display non-integr.	1202
	PPD3		Pneumatics/vacuum pressure	With sensor, amp, display non-integr	1178

Vacuum components

These are pneumatic components for vacuum equipment.

	Series/model series name		Port size/properties	Remarks	Catalog No./page
Filter/regulator	VFA1000,3000,4000	Vacuum filter and regulator	Rc1/8 to Rc1/2		530
	K-005	Vacuum filter			1332
	VRA2000	Vacuum regulator	Rc1/4,3/8		536
	EV2100V	Electro pneumatic regulator	Max. flow rate 120/150 (mm^2)	Pressure control (vacuum)	625
For vacuum ejector/vacuum unit, vacuum pad and related components for vacuum, refer to “Vacuum system components SELVACS” in catalog (No.CC-796A).					CC-796A
Pressure sensors	APA1	Air sensor			1318
	DPS	SEPEL switch			1330
	PPX	Electronic pressure switch (pressure switch)	Pneumatics/vacuum pressure	With sensor, amp, display integr.	1148
	PPG-D		Pneumatics/vacuum pressure	With sensor, amp, display integr.	1192
	PSW	Electronic pressure switch (pressure switch)	Pneumatics/vacuum pressure	With sensor, amp, display non-integr.	1212
	PPE		Pneumatics/vacuum pressure	With sensor, amp, display non-integr.	1202
	PPD3		Pneumatics/vacuum pressure	With sensor, amp, display non-integr	1178

System selection

Even beginners can easily make a model selection.

How to make a system selection

An overview of the selection is available
with the following two conditions.

1 When selecting peripheral pneumatic components, having determined cylinder bore size and operation speed

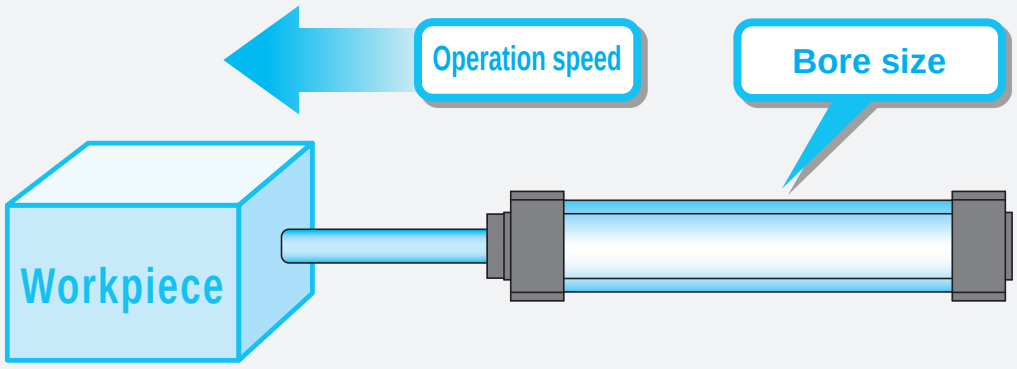

To Intro Page 42

2 When selecting peripheral pneumatic components, having determined bore size from cylinder load and operating time

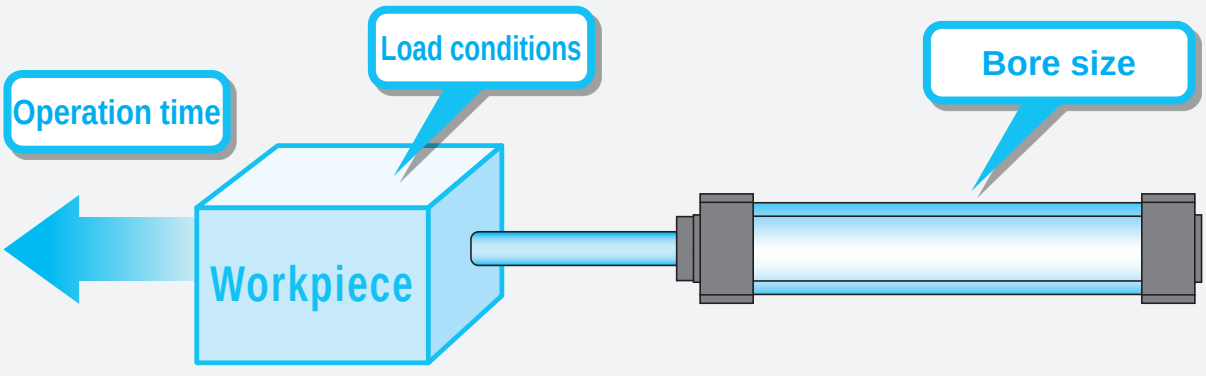

To Intro Page 53

1 Selecting from cylinder bore size and operation speed

STEP 1

[Confirming conditions]
Check cylinder tube bore size and cylinder operation speed

Select the theoretical reference speed

From Table 1

Whether the cylinder bore size and cylinder being used are driven with relative high or low speed is determined as a condition.

Using Table 1 as a reference, select the theoretical reference speed of the cylinder.

(1) Bore size ø□
(2) Operation speed Low speed/medium speed/ high speed/ultra-high speed

↓

STEP 2

Select appropriate fluid control components from bore size and theoretical reference speed, and select [required flow rate]

From Table 2

Refer to Table 2 and select appropriate fluid control components (valve, speed controller, silencer, piping) and [required flow rate] for corresponding cylinder bore size and theoretical reference speed.

↓

STEP 3

Select the clean air system components

From Table 3

Refer to Table 3, and select a component with a [max. flow rate] higher than the [Required flow rate] value.
When controlling multiple cylinders with a set of clean air system components, select the clean air system component having a [max. flow rate] higher than the [total of required flow rates].

* The relationship of the cylinder bore size and speed for the valve (4G Series/4K Series) is shown in a graph.
"A combination of the valve and the cylinder's standard system" (Example) Intro Pages 51 to 52

(1) The cylinder average speed is obtained from the combination of the valve and piping system. It is expressed as the cylinder's piston speed calculated by dividing the stroke length by the time that the piston rod takes from start to end of movement with the cylinder rod installed facing upward. When the load factor is 50%, the average speed should be approximately the cylinder's piston speed multiplied by 0.5. (Refer to Intro Page 55 for the relation of load factor and theoretical reference speed.)
(2) The cylinder theoretical reference speed is the value of when one cylinder moves independently.
(3) The valve's effective cross-sectional area used in the calculation for Table 2 is the 2-position value.
(4) This selection guide is for reference. With the CKD sizing program, confirm conditions to be actually used.

System selection

STEP1 Conditions confirmation/theoretical reference speed selection

As a condition, it is predetermined whether bore size and cylinder are to be operated at a relatively high speed or at a relatively low speed.

Table 1

Degree of cylinder speed	Low speed	Medium speed	High speed	Ultra high speed
Theoretical reference speed (mm/s)	250	500	750	1,000

STEP2 Fluid control components selection

Select appropriate fluid control components (valve, speed controller, silencer, piping) and [required flow rate] for bore size and theoretical reference speed selected from Table 1.

Table 2

Bore size (mm)	Theoretical reference speed (mm/s) Note)	Required flow rate (ℓ/min) (ANR)	Required composite effective cross-sectional area (mm^2)	Valve
				Single solenoid
ø6	500	5	0.1	MN4E010 4SA010/4SB010
ø10	500	14	0.2	MN4E010 4SA010/4SB010
ø16	500	36	0.5	MN4E010 4SA010/4SB010
ø20	250	29	0.5	4KA110/4KB110 4GA110R/4GB110R
	500	56	0.9	4KA110/4KB110
	750	84	1.4	4GA110R/4GB110R
	1,000	112	1.8	
ø25	250	44	0.8	4KA110/4KB110
	500	88	1.4	4GA110R/4GB110R
	750	132	2.1	4KB110/4GB110R
	1,000	175	2.8	4KB210/4GB210R
ø32	250	73	1.3	4KA110/4KB110 4GA110R/4GB110R
	500	143	2.9	4KA210/4KB210
	750	215	3.5	4GA210R/4GB210R
	1,000	286	4.6	

Note) The above table indicates theoretical reference speed at cylinder bore size.
Refer to the individual specifications of each model for the working piston speed range.

*1: Refer to Intro Page 59 for piping specifications.

Suitable control components				
		Pneumatic auxiliary components		Piping *1
	Double solenoid	Speed controller	Silencer	Piping (between valve and cylinder)
	MN4E020 4SA020/4SB020	SC3W-M5-4 DSC-C-M5-4	SLM-M5,SLM-M3	ø4 x ø2.5 nylon tube
	MN4E020 4SA020/4SB020	SC3W-M5-4 DSC-C-M5-4	SLM-M5,SLM-M3	ø4 x ø2.5 nylon tube
	MN4E020 4SA020/4SB020	SC3W-M5-4 DSC-C-M5-4	SLM-M5,SLM-M3	ø4 x ø2.5 nylon tube
	4KA120/4KB120 4GA120R/4GB120R	SC3W-6-6/SCL2-06-H66 DSC-(C)-6-6/DSC-S1-06-H66	SLM-M5,SLW-6A	ø6 x ø4 nylon tube
	4KA120/4KB120 4GA120R/4GB120R	SC3W-6-6 DSC-(C)-6-6 SCL2-06-H66 DSC-S1-06-H66	SLM-M5,SLW-6A	ø6 x ø4 nylon tube
	4KA120/4KB120 4GA120R/4GB120R	SC3W-6-6 DSC-(C)-6-6 SCL2-06-H66 DSC-S1-06-H66	SLM-M5,SLW-6A	ø6 x ø4 nylon tube
	4KB120/4GB120R	SC1-6 SCL2-08-H88	SLW-6A,SL-M5	ø8 x ø5.7 nylon tube
	4KB220/4GB220R	DSC-S1-08-H88	SLW-6S,SLW-6A	ø8 x ø5.7 nylon tube
	4KA120/4KB120 4GA120R/4GB120R	SC3W-6-6/SCL2-06-H66 DSC-(C)-6-6/DSC-S1-06-H66	SLM-M5,SLW-6A	ø6 x ø4 nylon tube
	4KA220/4KB220 4GA220R/4GB220R	SC1-6 SCL2-08-H88 DSC-S1-08-H88	SLW-6S,SLW-6A	ø8 x ø5.7 nylon tube

System selection

Bore size (mm)	Theoretical reference speed (mm/s) Note)	Required flow rate (ℓ/min) (ANR)	Required composite effective cross-sectional area (mm^2)	Valve Single solenoid
ø40	250	110	1.7	
	500	230	3.3	4KA210/4KB210 4GA210R/4GB210R
	750	340	5.0	
	1,000	450	6.6	
ø50	250	180	2.6	4KA210/4KB210 4GA210R/4GB210R
	500	350	5.2	
	750	530	7.7	4GA310R/4GB310R
	1,000	710	10.4	4GA310R/4GB310R 4F310/4F410
ø63	250	280	4.1	4KA210/4KB210 4GA310R/4GB310R
	500	560	8.2	4GA310R/4GB310R
	750	840	12.3	4KA310/4KB310 4F310/4F410
	1,000	1,100	16.4	4F510
ø80	250	450	6.6	4KB210/4F210-08
	500	910	13.2	4F410-10/4F310-10 4KB310-10
	750	1,400	19.8	4KB410-15
	1,000	1,800	26.4	4F510-15
ø100	250	710	10.3	4GA410-10/4GB410-10 4F410-10/4F310-10 4KB310-10
	500	1,400	20.6	4GB410-15
	750	2,100	30.9	4KB410-15/4F510-15
	1,000	2,800	41.2	4F610-20

Note) The above table indicates theoretical reference speed at cylinder bore size.
Refer to the individual specifications of each model for the working piston speed range.

*1: Refer to Intro Page 59 for piping specifications.

Suitable control components				
		Pneumatic auxiliary components		Piping *1
	Double solenoid	Speed controller	Silencer	Piping (between valve and cylinder)
		SC3W-6-6 SCL2-06-H66 DSC-(C)-6-6 DSC-S1-06-H66	SLM-M5,SLW-6A	ø6 x ø4 nylon tube
	4KA220/4KB220 4GA220R/4GB220R	SC1-6 SCL2-08-H88 DSC-8-8 DSC-S1-08-H88	SLW-6S,SLW-6A	ø8 x ø5.7 nylon tube
		SC1-8	SLW-8A,SLW-6A	ø10 x ø7.2 nylon tube
		SC1-8	SLW-8A,SLW-8S	ø10 x ø7.2 nylon tube
	4KA220/4KB220 4GA220R/4GB220R	SC1-6 SCL2-08-H88 DSC-S1-08-H88	SLW-6A,SLW-6S	ø8 x ø5.7 nylon tube
		SC1-8 SCL2-10-H1010 DSC-S1-10-H1010	SLW-8A,SLW-6A	ø10 x ø7.2 nylon tube
	4GA320R/4GB320R		SLW-8A,SLW-8S	ø10 x ø7.2 nylon tube
	4GA320R/4GB320R 4F320/4F420	SC1-10	SLW-10A	ø15×ø11.5 nylon tube or Rc3/8 steel pipe
	4KA220/4KB220 4GA320R/4GB320R	SC1-6 SCL2-08-H88 DSC-S1-08-H88	SLW-6S,SLW-6A	ø8 x ø5.7 nylon tube
	4GA320R/4GB320R	SC1-8 SCL2-10-H1010 DSC-S1-10-H1010	SLW-8A,SLW-8S	ø10 x ø7.2 nylon tube
	4KA320/4KB320 4F320/4F420	SC1-10	SLW-10A	ø15×ø11.5 nylon tube or, Rc3/8 steel pipe
	4F520	SC1-15	SLW-15A	Rc1/2 steel pipe
	4KB220/4F220-08	SC1-8 SCL2-10-H1010 DSC-S1-10-H1010	SLW-8A,SLW-8S	ø10 x ø7.2 nylon tube
	4F420-10/4F320-10 4KB320-10	SC1-10	SLW-10A	ø15×ø11.5 nylon tube or, Rc3/8 steel pipe
	4KB420-15 4F520-15	SC1-15	SLW-15A	Rc1/2 steel pipe
		SC-20A	SLW-15A	Rc1/2 steel pipe
	4GA420-10/4GB420-10 4F420-10/4F320-10 4KB320-10	SC1-10	SLW-10A	ø15 x ø11.5 nylon tube or Rc3/8 steel pipe
	4GB420-15 4KB420-15/4F520-15	SC1-15	SLW-15A	Rc1/2 steel pipe
		SC-20A	SLW-15A	Rc1/2 steel pipe
	4F620-20	SC-20A	SL-20A,SLW-20S	Rc3/4 steel pipe

System selection

Bore size (mm)	Theoretical reference speed (mm/s) Note)	Required flow rate (ℓ/min) (ANR)	Required composite effective cross-sectional area (mm^2)	Valve
				Single solenoid
ø125	250	1,100	16.1	4GB410-15 4KB410-15/4F510-15
	500	2,200	32.2	
	750	3,300	48.2	4F610-20
	1,000	4,400	64.4	
ø140	250	1,400	20.2	4GB410-15 4KB410-15/4F510-15
	500	2,800	40.4	4F610-20
	750	4,200	60.5	
	1,000	5,500	80.8	4F710-25
ø160	250	1,800	26.3	4GB410-15 4KB410-15/4F510-15
	500	3,600	52.6	4F610-20
	750	5,400	79.0	4F710-20
	1,000	7,200	104.7	-
ø180	250	2,300	33.3	4KB410-15 4F510-15
	500	4,600	66.6	4F710-20
	750	6,900	100.0	4F710-25
	1,000	9,200	132.5	-
ø200	250	2,800	41.2	4F610-20
	500	5,600	82.4	4F710-25
	750	8,400	122.7	-
	1,000	11,200	163.6	-
ø250	250	4,400	64.3	4F710-20
	400	7,000	103.0	4F710-25
	750	13,200	191.7	-
	1,000	17,600	255.6	-

*1: Refer to Intro Page 59 for piping specifications.

Suitable control components				
		Pneumatic auxiliary components		Piping *1
	Double solenoid	Speed controller	Silencer	Piping (between valve and cylinder)
	4GB420-15 4KB420-15/4F520-15	SC1-15	SLW-15A	Rc1/2 steel pipe
		SC-20A	SLW-15A	Rc1/2 steel pipe
	4F620-20	SC-20A	SL-20A,SLW-20S	Rc3/4 steel pipe
		SC-20A	SL-20A	Rc3/4 steel pipe
	4GB420-15 4KB420-15/4F520-15	SC1-15	SLW-15A	Rc1/2 steel pipe
	4F620-20	SC-20A	SL-20A,SLW-20S	Rc3/4 steel pipe
			SL-20A	Rc3/4 steel pipe
	4F720-25	SC-20A	SL-25A	Rc1 steel pipe
	4GB420-15 4KB420-15/4F520-15	SC-20A	SLW-15A	Rc1/2 steel pipe
	4F620-20	SC-20A	SL-20A	Rc3/4 steel pipe
	4F720-20	SC-20A	SL-20A	Rc3/4 steel pipe
	-	-	-	-
	4KB420-15 4F520-15	SC-20A	SLW-15A	Rc1/2 steel pipe
	4F720-20	SC-20A	SL-20A	Rc3/4 steel pipe
	4F720-25	SC-25A	SL-25A	Rc1 steel pipe
	-	-	-	-
	4F620-20	SC-20A	SL-20A,SLW-20S	Rc3/4 steel pipe
	4F720-25	SC-25A	SL-25A	Rc1 steel pipe
	-	-	-	-
	-	-	-	-
	4F720-20	SC-20A	SL-20A	Rc3/4 steel pipe
	4F720-25	SC-25A	SL-25A	Rc1 steel pipe
	-	-	-	-
	-	-	-	-

System selection

STEP 3 Clean air system components selection

Select a component with a max. flow rate equal to or higher than the [required flow rate] value in Table 2.
When controlling multiple cylinders with a single set of clean air system components, select the clean air system component with [max. flow rate] higher than [total required flow rates].

Table 3

F.R.L kit			F.R. unit		
Model No.	Port size	Max flow ℓ/min (Atm press conv value)	Model No.	Port size	Max flow ℓ/min (Atm press conv value)
C1000-6-W	Rc1/8	450	W1000-6-W	Rc1/8	800
C1000-8-W	Rc1/4	630	W1000-8-W	Rc1/4	1,150
C2000-8-W	Rc1/4	1,200	W2000-8-W	Rc1/4	1,500
C2000-10-W	Rc3/8	1,700	W2000-10-W	Rc3/8	2,000
C2500-8-W	Rc1/4	1,200	W3000-8-W	Rc1/4	2,150
C2500-10-W	Rc3/8	1,700	W3000-10-W	Rc3/8	2,430
C3000-8-W	Rc1/4	1,280	W4000-8-W	Rc1/4	2,500
C3000-10-W	Rc3/8	1,750	W4000-10-W	Rc3/8	4,350
C4000-8-W	Rc1/4	1,430	W4000-15-W	Rc1/2	4,750
C4000-10-W	Rc3/8	2,400	W8000-20-W	Rc3/4	10,000
C4000-15-W	Rc1/2	3,000	W8000-25-W	Rc1	10,000
C6500-20-W	Rc3/4	4,500	B7019-1C	Rc1/8	500
C6500-25-W	Rc1	5,000	B7019-2C	Rc1/4	900
C8000-20-W	Rc3/4	7,000			
C8000-25-W	Rc1	7,500			
K60570-1C-GB	Rc1/8	200			
K60570-2C-GB	Rc1/4	300			

Explanation of technical terms

[Theoretical reference speed]: indicates degree of cylinder speed, expressed as the following formula.
(This value coincides with speed at no load. When load is applied, speed drops considerably.)

$$VO=1920\times\frac{S}{A}=2445\times\frac{S}{D^2} \quad (1)$$

VO: Theoretical reference speed (mm/s)
A: Cylinder sectional area (cm^2)
S: Composite effective cross-sectional area of circuit (exhaust air side) (mm^2)
D: Cylinder bore size (cm)

When expressed as a graph, the theoretical reference speed is the speed within the range where the cylinder moves at a uniform speed

$$VO=\frac{\ell}{t3}\ (mm/s)$$

t1: Time until movement starts
t2: Time of primary delay
t3: Operating time with constant velocity
ℓ: Stroke

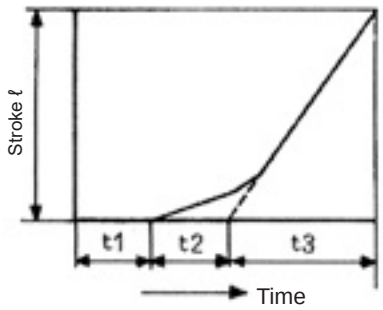

* Note/t1 and t2 differ depending on load. At no load, this can be ignored to no ill effect.

■ F.R.L. kit, unit, regulator
Primary pressure 0.7 MPa, set pressure 0.5 MPa, pressure drop 0.1 MPa

■ Air filter
Primary pressure 0.7 MPa, pressure drop 0.02 MPa

■ Lubricator
Primary pressure 0.5 MPa, pressure drop 0.03 MPa

Air filter (F)			Regulator (R)			Lubricator (L)		
Model No.	Port size	Max flow ℓ/min (Atm press conv)	Model No.	Port size	Max flow ℓ/min (Atm press conv)	Model No.	Port size	Max flow ℓ/min (Atm press conv)
F1000-6-W	Rc1/8	460	R1000-6-W	Rc1/8	770	L1000-6-W	Rc1/8	550
F1000-8-W	Rc1/4	610	R1000-8-W	Rc1/4	1,350	L1000-8-W	Rc1/4	700
F2000-8-W	Rc1/4	1,300	R2000-8-W	Rc1/4	1,750	L3000-8-W	Rc1/4	1,100
F2000-10-W	Rc3/8	1,700	R2000-10-W	Rc3/8	2,500	L3000-10-W	Rc3/8	2,250
F3000-8-W	Rc1/4	1,230	R3000-8-W	Rc1/4	2,000	L4000-8-W	Rc1/4	1,000
F3000-10-W	Rc3/8	1,500	R3000-10-W	Rc3/8	2,600	L4000-10-W	Rc3/8	1,700
F4000-8-W	Rc1/4	1,320	R4000-8-W	Rc1/4	2,500	L4000-15-W	Rc1/2	2,700
F4000-10-W	Rc3/8	2,140	R4000-10-W	Rc3/8	4,400	L8000-20-W	Rc3/4	6,300
F4000-15-W	Rc1/2	3,000	R4000-15-W	Rc1/2	5,000	L8000-25-W	Rc1	10,000
F6000-20-W	Rc3/4	5,600	R6000-20-W	Rc3/4	7,000	A3019-1C	Rc1/8	100
F6000-25-W	Rc1	6,200	R6000-25-W	Rc1	7,700	A3019-2C	Rc1/4	400
F8000-20-W	Rc3/4	6,400	R8000-20-W	Rc3/4	14,000	3003E-6C	Rc3/4	3,500
F8000-25-W	Rc1	6,800	R8000-25-W	Rc1	11,000	3003E-8C	Rc1	4,000
A1019-1C	Rc1/8	550	B2019-1C	Rc1/8	500			
A1019-2C	Rc1/4	700	B2019-2C	Rc1/4	500			
1138-6C-E	Rc3/8	5,500	2215-6C	Rc3/4	14,000			
1138-8C-E	Rc1	7,000	2215-8C	Rc1	14,000			
			2215-10C	Rc1 1/4	14,000			

[Required flow rate]: indicates instantaneous flow rate for operating a cylinder with velocity *vo*, expressed with the following formula. Values in the table are when P = 0.5 MPa. The required flow rate is a value necessary to select clean air system components.

$$Q \approx \frac{Avo(P+0.101)\times 60}{0.101\times 10^4} \quad -(2)$$

Q: Required flow rate (ℓ/min) (ANR)
P: Supply pressure (MPa)

[Required effective sectional area]: indicates composite effective cross-sectional area for the exhaust circuit required for moving the cylinder at speed *vo*.
(Composite effective cross-sectional area of valve, speed controller, silencer or piping)

[Proper standard system]: indicates the most appropriate combination of valve, speed controller, silencer and bore size for operating a cylinder with velocity *vo*. The combination in the table is for a pipe length of 1 m.

System selection

A combination of the valve and the cylinder's standard system (example)

(1) The cylinder average speed is obtained from the combination of the valve and piping system.It is expressed as the cylinder's piston speed calculated by dividing the stroke length by the time that the piston rod takes from start to end of movement with the cylinder rod installed facing upward. When the load factor is 50%, the cylinder piston speed should be approximately ×0.5. (Refer to Intro Page 55 for the relation of load factor and theoretical reference speed.)

(2) The cylinder's average speed is that when one cylinder is operated independently.

(3) The effective cross-sectional area of the solenoid valve used for the calculation below is the 2-position value.

(4) This selection guide is for reference. Check the selection with actual conditions using a sizing program.

(5) The graph for the valve 4G/4K Series (2-position single, base piping) is shown as an example.

4G Series

(With internal exhaust check valve)

(Example) The connection component system No. is ❷ for the 4G1 with a C6 port size.

Series	Base piping						System No.
	Model No.	Solenoid valve port size	Speed Controller	Silencer	Piping(1m)	Composite effective cross-sectional area (mm^2) Pipe length (1 m)	
4G1	M4GB110R	C4	SC3W-6-4	SLW-6S	ø4 x ø2.5	1.4	❶
	M4GB110R	C6	SC1-6	SLW-6S	ø6 x ø4	2.8	❷
4G2	M4GB210R	C6	SC1-8	SLW-8S	ø6 x ø4	4.5	❸
	M4GB210R	C8	SC1-10	SLW-8S	ø8 x ø5.7	6.7	❹
4G3	M4GB310R	C10	SC1-10	SLW-10L	ø10 x ø7.2	10.1	❺
	M4GB310R	C10	SC1-15	SLW-10L	ø12 x ø8.9	11.5	❻

* The system No. is indicated in the following graph.

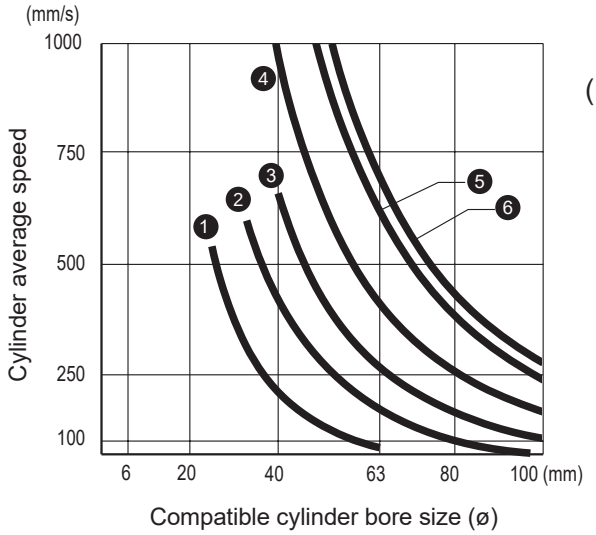

(Example) When using system ❷ with ø40 cylinder diameter, the cylinder's average speed is about 450 mm/s. (Note that this differs with working conditions.)

MN4G Series

(With internal exhaust check valve)

Series	Solenoid valve port size	Speed controller	Piping (1 m)	Common exhaust piping	Composite effective X-sectional area (mm²)	System No.
MN4G1	C4	SC3W-M5-4	ø4×ø2.5	ø6×ø4×3 m	0.9	❶
	C4	SC3W-6-4	ø4×ø2.5	ø6×ø4×3 m	1.4	❷
	C6	SC1-6	ø6×ø4	ø8×ø5.7×3 m	2.8	❸
MN4G2	C6	SC1-6	ø6×ø4	ø8×ø5.7×3 m	3.8	❹
	C8	SC1-8	ø8×ø5.7	ø10×ø7.2×3 m	6.0	❺

* The system No. is indicated in the following graph.
* This graph applies to common exhaust.

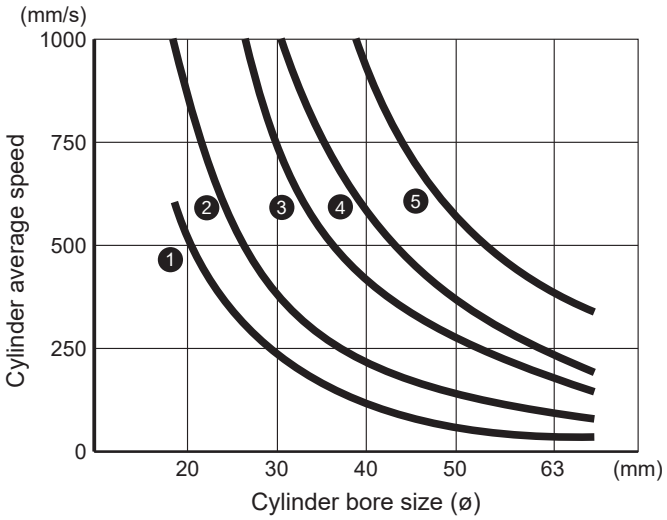

4K Series

Series	Solenoid valve port size	Speed controller	Silencer	Piping (1 m)	Composite effective X-sectional area (mm²)	System No.
4KB110	C6	SC1-6	SLW-6S	ø6×ø4	3.2	❶
4KB210	C8	SC1-8	SLW-8S	ø8×ø5.7	7.7	❷
4KB310	C10	SC1-10	SLW-10L	ø10×ø7.2	14.1	❸
4KB410	C15	SC1-15	SLW-15A	ø12×ø8.9	23.6	❹

* The system No. is indicated in the following graph.

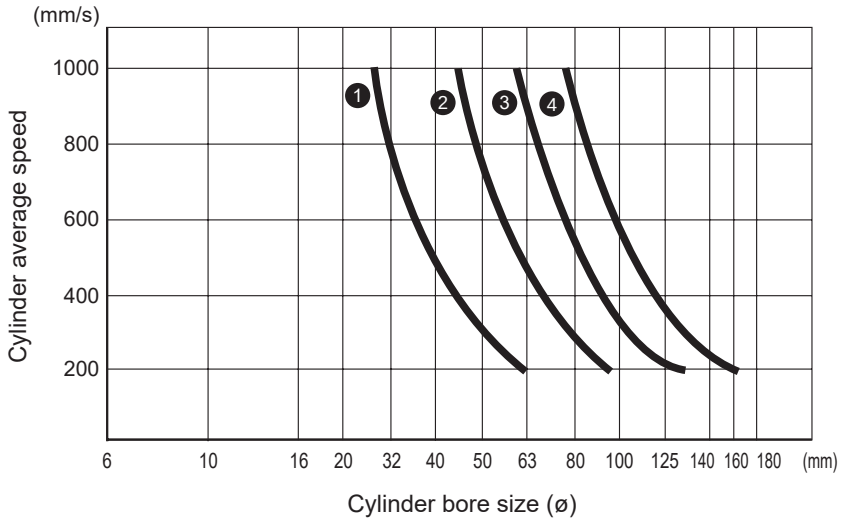

System selection

2 Selecting from the load value and operation time

How to select

When load (N) and cylinder required operation time (S) are already decided, use [System selection 2] to select an appropriate model. Follow the following procedures.

STEP 1
[Confirming conditions]
Load value (N),
Required operation time (S)

↓

STEP 2
Selecting cylinder bore size
From Graph 1

↓

STEP 3
Selecting theoretical reference speed
From Graph 2

↓

STEP 4
Selecting a suitable system
From Graph 3

↓

STEP 5
Selecting suitable components
From Table 1

STEP 1 Confirming conditions

(1) Load F= ☐ (N)
(2) Required operation time t = ☐ (s)
(3) Stroke L= ☐ (mm)
(4) Pressure P= ☐ (MPa)

M: Weight of body (kg)
μ : Friction coefficient (normally μ≈ 0.3)
F : Load (N)
g : 9.8 m/s²

● Vertical

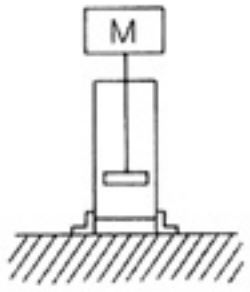

F=Mg

● Horizontal

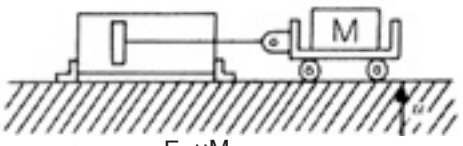

F=μMg

STEP 2 Selecting cylinder bore size

According to the nomogram for cylinder bore size, select the cylinder bore size and read the load factor at the same time. (Normally, for value F of “Step 1 Confirming conditions”, read the cylinder bore size whose load factor is close to 50%)

Cylinder bore size D = ø ☐

(Example) When F = 800N, P = 0.5 MPa, cylinder bore size is ø63 at Load factor 50% .

Graph 1 Nomogram to find cylinder bore size

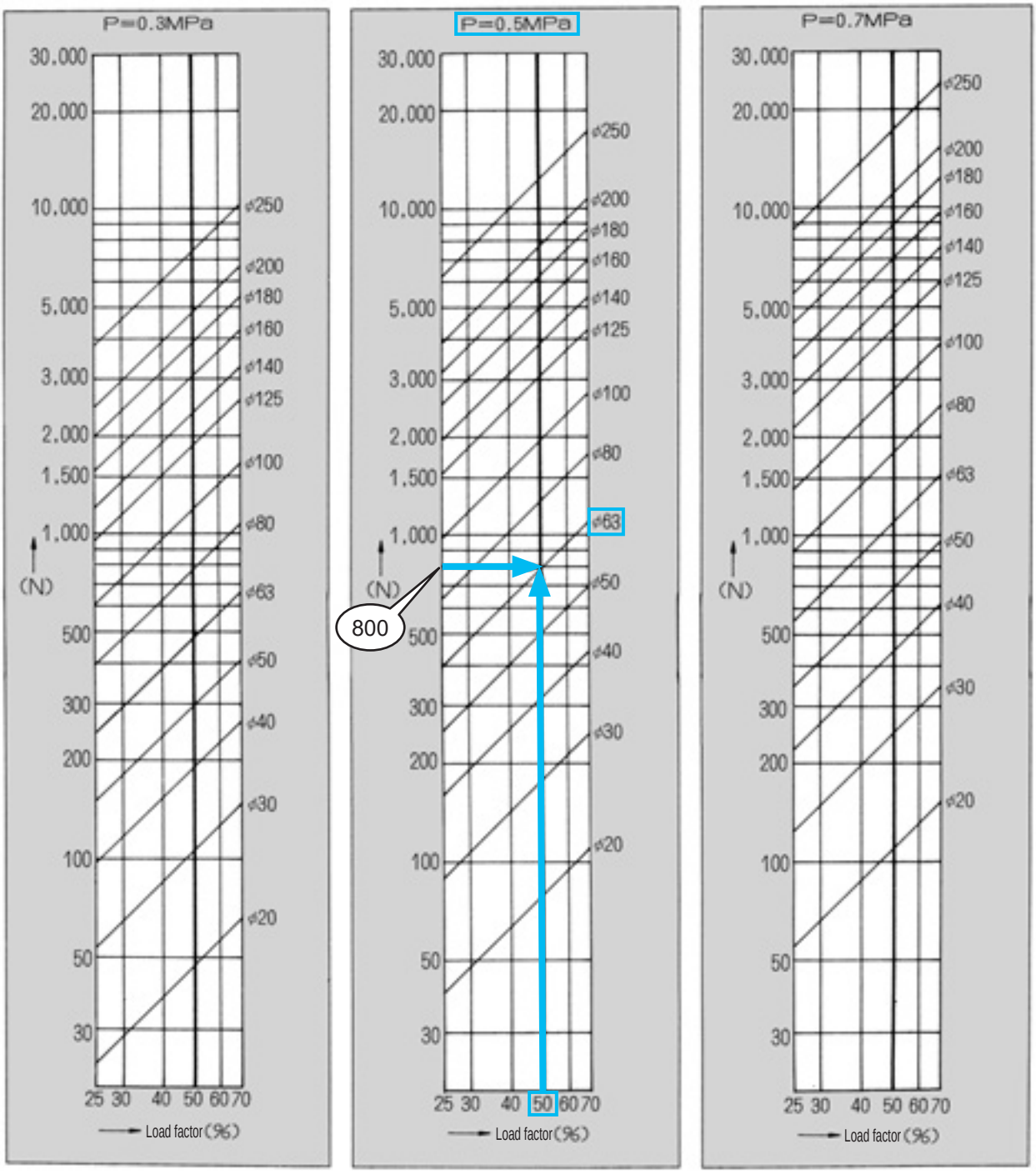

STEP 3 Selecting theoretical reference speed

According to t-*vo* graph, read *vo* value to obtain the required operation time t (sec).

vo= ☐

(Example) When Load factor 50% and Stroke of 200mm cylinder operate with 1.0sec,
theoretical reference speed is 450 mm/s.

Graph 2 t-*vo* graph

Load factor 0%

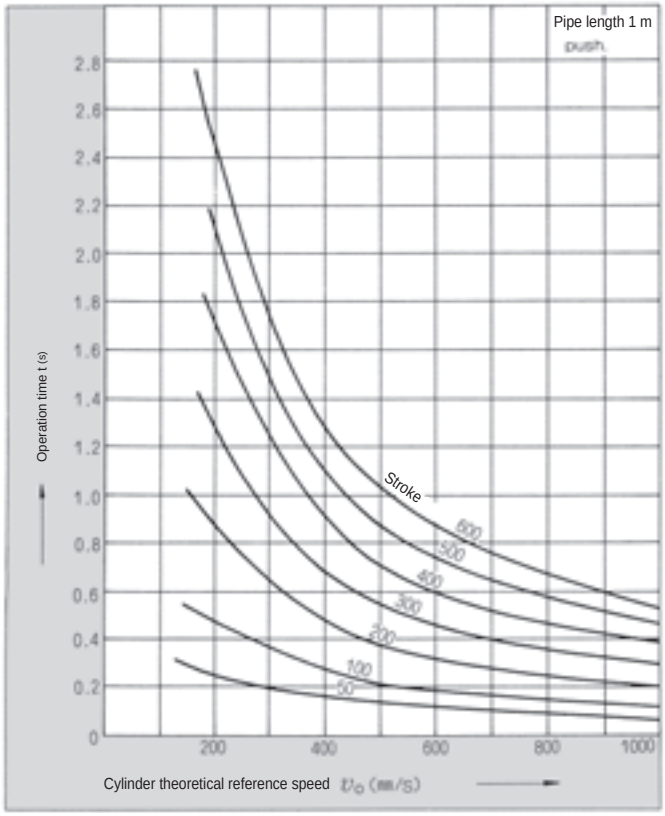

Load factor 25%

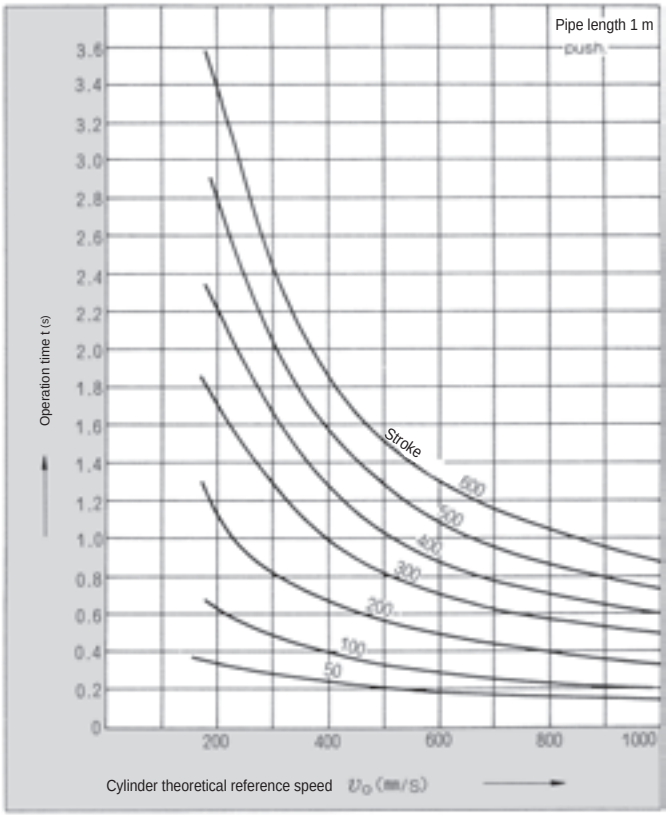

Load factor 50%

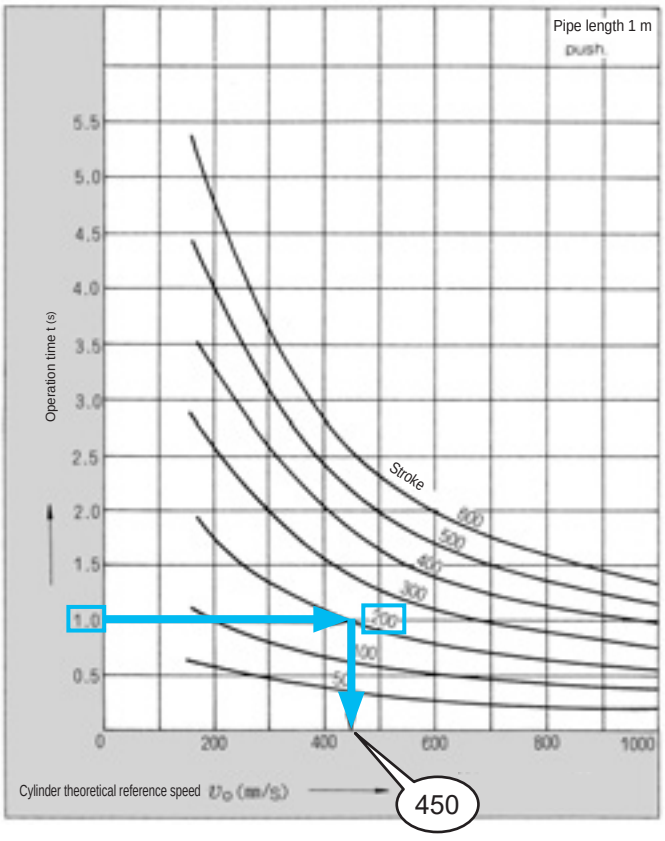

Load factor 70%

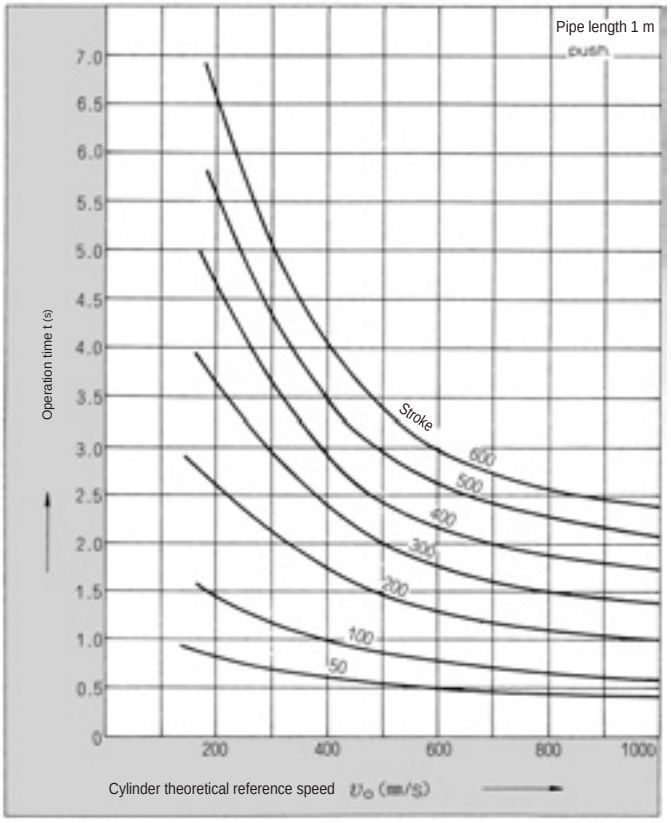

System selection

STEP 4 Selecting a suitable system

In the system selection table, find the cross point of *VO* obtained in [STEP 3 Selecting theoretical reference speed] and øD obtained in [STEP 2 Selecting cylinder bore size], and from the cross point, trace a line extended straight up to read the system code.

System code ☐

(Example) In order to operate ø63 cylinder at theoretical reference speed 450 mm/s, C1 system is ideal.

Graph 3 System selection table

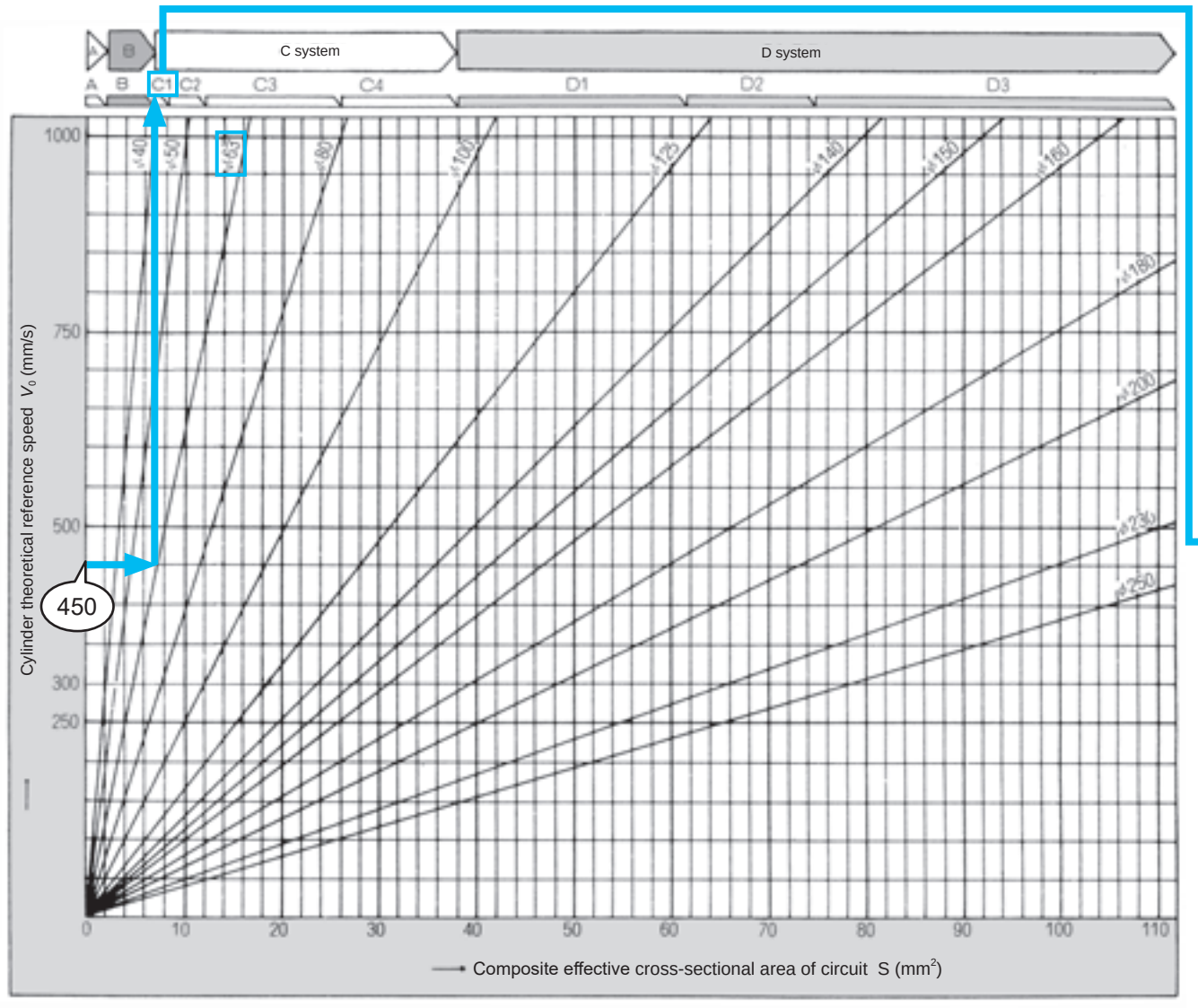

STEP 5 Selecting suitable components

According to the standard system table, confirm the model No. of proper system components with the code found in [STEP 4 Selecting a suitable system].

	(Example) CI system
Valve ☐	Valve: Single 4KB210-08 or 4GB310R-08 Double 4KB220-08 or 4GB320R-08
Speed controller ☐	Speed controller: SCI-8
Silencer ☐	Silencer: SLW-8A
Piping ☐	Piping: ø10 x ø7.2 nylon tube 1 m

Table 1 Standard system table

Standard system No.	Valve		Speed controller	Silencer	Piping	Composite eff X-sect area (mm^2) pipe 1 m
	Single solenoid	Double solenoid				
A	4SB010-M5 4KA110-GS4	4SB020-M5 4KA120-GS4	SC3W-M5-4 (SC-M5)	SLM-M5	ø4×ø2.5 Nylon tube	0.9
B1	4KA110-GS6 4KB110-06	4KA120-GS6 4KB120-06	SC3W-6-6 SCL2-06-H66	SLM-M5 SLW-6A	ø6×ø4 Nylon tube	2.0
B2	4KB110-06 4GB110R-06	4KB120-06	SC1-6 SCL2-08-H88	SL-M5 SLW-6A	ø8×ø5.7 Nylon tube	3.0
B3	4GB210R-06 4KB210-06	4KB220-06	SC1-6 SCL2-08-H88	SLW-6A SLW-6S	ø8×ø5.7 Nylon tube	5.2
B4	4GB210R-08 4KB210-08	4GB220R-08 4KB220-08	SC1-8 SCL2-10-H1010	SLW-6A SLW-8A	ø10×ø7.2 Nylon tube	6.4
C1	4GB210R-08 4KB210-08 4F210-08	4GB220R-08 4KB220-08 4F220-08	SC1-8 SCL2-10-H1010	SLW-8A SLW-8S	ø10×ø7.2 Nylon tube	7.8
C2	4GB310R-10 4F310-10 4KB310-10	4GB320R-10 4F320-10 4KB320-10	SC1-10	SLW-10A	ø10×ø7.2 Nylon tube or Rc3/8 steel pipe	12
C3	4GB410-15 4F510-15 4KB410-15	4GB420-15 4F520-15 4KB420-15	SC1-15	SLW-15A	Rc1/2 steel pipe	27
C4	4GB410-15 4F510-15 4KB410-15	4GB420-15 4F520-15 4KB420-15	SC-20A	SLW-15A	Rc1/2 steel pipe	38
D1	4F610-20	4F620-20	SC-20A	SL-20A	Rc3/4 steel pipe	64
D2	4F710-20	4F720-20	SC-20A	SL-20A	Rc3/4 steel pipe	80
D3	4F710-25	4F720-25	SC-25A	SL-25A	Rc1 steel pipe	112

Effective cross-sectional area for steel pipes and nylon tubes, and recommended max. flow rate for gas pipes

Effective cross-sectional area of steel pipe

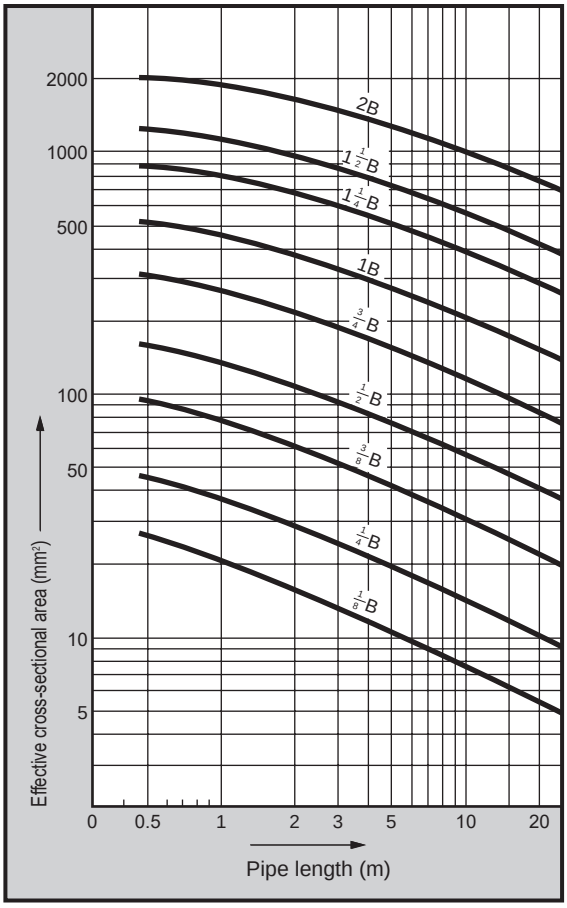

Effective cross-sectional area of nylon tube

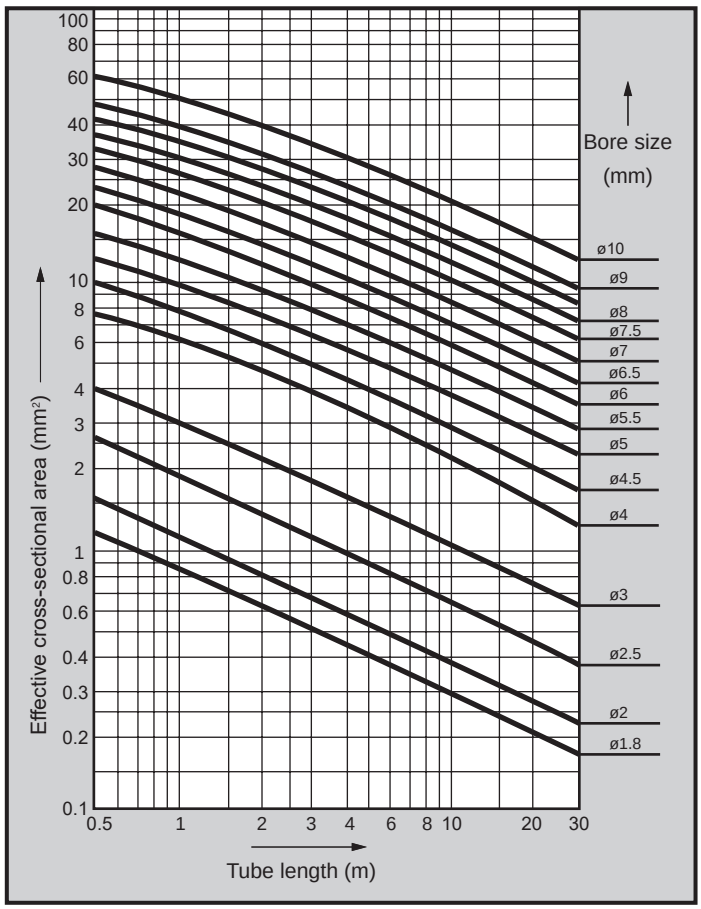

Recommended max. flow rate table of gas tube

Nominal size	1/8B	1/4B	3/8B	1/2B	3/4B	1B	1 1/4B	1 1/2B
Pressure drop MPa (*1)	0.124	0.0707	0.0576	0.0425	0.0276	0.0209	0.0133	0.0105
Inlet pressure MPa	Recommended max. flow rate (ℓ/min)							
0.05	127	244	518	838	1,465	2,460	3,870	5,150
0.1	146	282	598	965	1,690	2,828	4,460	5,950
0.15	163	314	668	1,076	1,885	3,150	4,960	6,630
0.2	179	344	730	1,180	2,060	3,450	5,430	7,280
0.3	206	395	840	1,360	2,375	3,900	6,300	8,400
0.4	230	442	940	1,520	2,660	4,450	7,000	9,360
0.5	252	485	1,030	1,660	2,920	4,875	7,700	10,250
0.6	272	523	1,110	1,800	3,140	5,250	8,300	11,050
0.7	292	558	1,185	1,920	3,350	5,620	8,870	11,800
0.8	308	592	1,260	2,035	3,560	5,970	9,430	12,570
0.9	324	623	1,325	2,140	3,745	6,290	9,900	13,220
1.0	340	654	1,395	2,250	3,930	6,600	10,400	13,880
1.2	370	717	1,510	2,450	4,280	7,150	11,250	15,040
1.4	398	763	1,625	2,624	4,590	7,700	12,100	16,200
1.5	410	790	1,680	2,710	4,740	7,930	12,550	16,780

(*1: Inlet pressure = 0.5 MPa
Gas pipe length: 10 m)

(Remarks)

In the main line where the piping distance tends to increase, it is necessary to consider a pressure drop occurring at the end of the main line when air passes.

The recommended max. flow rate refers to the max. flow rate that can be recommended in the range of allowable pressure drop with respect to piping length, determined from actual use.

This does not mean that a higher flow is not possible, but rather that the pressure will further decrease if the flow exceeds this value.

Flow characteristics display method

1. Flow characteristics display

The catalog specifications indicate the flow rate as follows.

Applicable components	Display	Unit	Standards
Pneumatic components	New JIS compliant indication	C, b	ISO 6358:1989 "Pneumatic fluid Components -Flow characteristics test method"JIS B 8390:2000 (ISO 6358 translation)
	Conventional indication	S	JIS B 8373:1993 "Pneumatic 2-port solenoid valves" JIS B 8374:1993 "Pneumatic 3-port solenoid valves" JIS B 8375:1993 "Pneumatic 4, 5-port solenoid valve" JIS B 8379:1995 "Pneumatic noise reduction device"
		Cv	ANSI(NFPA)T3. 21. 3:1990

2. Explanation

The flow characteristics of the solenoid valves were conventionally indicated with the effective cross-sectional area S. However, JIS was revised (JIS B 8390:2000), and these are now indicated with the sonic conductance C and critical pressure ratio b.

- Sonic conductance C: Value obtained by dividing the passage weight flow of the component in the choke flow by the sum of the upstream absolute pressure and standard state density. (sonic conductance) S ≈ 5.0 C (Conventional sizing is possible with C.)
- Critical pressure ratio b: Pressure ratio at which choked flow results if smaller than this value (downstream pressure/upstream pressure) (critical pressure ratio)
- Effective cross-sectional area S (mm^2): The value of the ideal restricted cross-sectional area without friction or compressed flow, calculated from the pressure changes inside the air tank when the choke flow is released from the components mounted on the air tank.

* Choke flow: Flow at which upstream pressure is higher than downstream pressure, and speeds at certain sections of components reach acoustic velocity. The fluid's mass flow rate is proportional to the upstream pressure, and is not dependent on downstream pressure. (Choked flow)

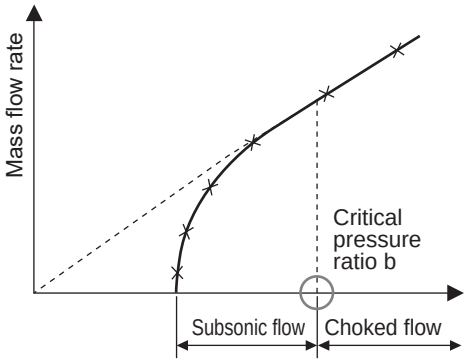

Fig. 1 Mass flow characteristics for upstream pressure

Flow rate formula

Depending on the actual unit, they are shown as follows.

$\frac{P_2+0.1}{P_1+0.1}$ Choked flow when ≤ b

$$Q=600\times C\,(P_1+0.1)\sqrt{\frac{293}{273+t}} \quad \text{.....(1)}$$

$\frac{P_2+0.1}{P_1+0.1}$ Subsonic flow when >b

$$Q=600\times C(P_1+0.1)\sqrt{1-\left[\frac{\frac{P_2+0.1}{P_1+0.1}-b}{1-b}\right]^2}\sqrt{\frac{293}{273+t}} \quad \text{.....(2)}$$

Q : Air flow rate [dm^3/min(ANR)], SI unit dm^3 (cubic decimeter) can also be expressed with ℓ (liter). $1dm^3 = 1\ell$
C : Sonic conductance [dm^3/(s·bar)]
b : Critical pressure ratio [-]
P_1 : Upstream pressure [MPa]
P_2 : Downstream pressure [MPa]
t : Temperature (°C)

To calculate effective cross-sectional area S, substitute the value C obtained with C = S/5 above in the above formula.
For subsonic flow, substitute b = 0.5 in formula (2).

Degree of protection

● Degree of protection

■ IEC (International Electrotechnical Commission) standards (IEC60529)

■ JIS C 0920 : 2003

IP-□ □

Degree of protection (International Protection)

1st characteristic No. (degree of protection for foreign solid matter)

1st character No.	Degree of protection	
0	No protection	Without protection
1	ø50 mm	Protection against inflow of solids 50 mm and over in diameter
2	ø12.5 mm	Protection against inflow of solids 12.5 mm and over in diameter
3	2.5 mm	Protection against inflow of solids 2.5 mm and over in diameter
4	1 mm	Protection against inflow of solids 1.0 mm and over in diameter
5	Dust-proof 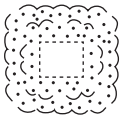	No inflow of dust at levels adversely affecting normal device operation or safety
6	Dust proof 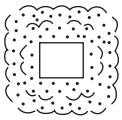	No inflow of dust

2nd characteristic No. (degree of protection for water entry)

2nd character No.	Degree of protection	
0	No protection	
1	Protection against water dripping 	No harmful effects from water dripping vertically.
2	Protection against dripping water tilted at an angle of up to 15° 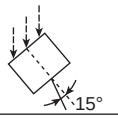	Water dripping vertically has no adverse effect when the product is tilted at an angle of up to 15° from its normal position.
3	Protection for watering 	Water falling as a spray at any angle up to 60° from the vertical has no adverse effect.
4	Protection against splashing water 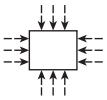	Water splashing against the product from any direction has no adverse effect.
5	Protection against water jets 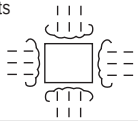	No harmful effects occur even when water is sprayed with nozzles from all directions.
6	Protection against powerful jets 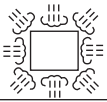	Water projected in powerful jets against the product from any direction has no adverse effect.
7	Protection against immersion 	Water will not enter the product even when it is immersed in water under defined conditions.
8	Protection against immersion 	The product can be used for continuous immersion in water.

MEMO

Safety Precautions

Be sure to read this section before use.

When designing and manufacturing equipment using CKD products, the manufacturer is obligated to ensure that the safety of the mechanism, pneumatic control circuit and/or water control circuit and the system that runs the electrical controls are secured.
It is important to select, use, handle and maintain CKD products appropriately to ensure their safe usage.
Observe warnings and precautions to ensure device safety.
Check that device safety is ensured, and manufacture a safe device.

WARNING

1 This product is designed and manufactured as a general industrial machine part.
It must be handled by an operator having sufficient knowledge and experience.

2 Use this product in accordance with specifications.

This product must be used within its stated specifications. In addition, never modify or additionally machine this product.
This product is intended for use in general industrial machinery equipment or parts. It is not intended for use outdoors (except for products with outdoor specifications) or for use under the following conditions or environments. (Note that this product can be used when CKD is consulted prior to its usage and the customer consents to CKD product specifications. The customer should provide safety measures to avoid danger in the event of problems.)

❶ Use for applications requiring safety, including nuclear energy, railways, aircraft, marine vessels, vehicles, medical devices, devices or applications in contact with beverages or foodstuffs, amusement devices, emergency cutoff circuits, press machines, brake circuits, or safety devices or applications.
❷ Use for applications where life or assets could be significantly affected, and special safety measures are required.

3 Observe organization standards and regulations, etc., related to the safety of the device design and control, etc.

ISO4414,JIS B 8370(Pneumatic fluid power - General rules and safety requirements for systems and their components)
JFPS2008(Principles for pneumatic cylinder selection and use)
Including the High Pressure Gas Safety Act, Industrial Safety and Health Act, other safety rules, organization standards and regulations, etc.

4 Do not handle, pipe, or remove devices before confirming safety.

❶ Inspect and service the machine and devices after confirming safety of the entire system related to this product.
❷ Note that there may be hot or charged sections even after operation is stopped.
❸ When inspecting or servicing the device, turn OFF the energy source (air supply or water supply), and turn OFF power to the facility. Discharge any compressed air from the system, and pay enough attention to possible water leakage and leakage of electricity.
❹ When starting or restarting a machine or device that incorporates pneumatic components, make sure to secure system safety, such as pop-out prevention measures.

5 Observe the warnings and cautions on the following pages to prevent accidents.

■ Precautions are ranked as “DANGER”, “WARNING”, and “CAUTION” in this section.

DANGER:	In the case where the product operation is mishandled and/or when the urgency of a dangerous situation is high, it may lead to fatalities or serious injuries.
WARNING:	A dangerous situation may occur if handling is mistaken, leading to fatal or serious injuries.
CAUTION:	A dangerous situation may occur if handling is mistaken, leading to minor injuries or property damage.

Note that some items indicated with “CAUTION” may lead to serious results depending on the conditions.
All items contain important information and must be observed.

Warranty

1 Warranty period

The product specified herein is warranted for one (1) year from the date of delivery to the location specified by the customer.

2 Warranty coverage

If the product specified herein fails for reasons attributable to CKD within the warranty period specified above, CKD will promptly provide a replacement for the faulty product or a part thereof or repair the faulty product at one of CKD's facilities free of charge.

However, following failures are excluded from this warranty:

1) Failure caused by handling or use of the product under conditions and in environments not conforming to those stated in the catalog, the Specifications, or the Instruction Manual.
2) Failure caused by use of the product exceeding its durability (cycles, distance, time, etc.) or caused by consumable parts.
3) Failure not caused by the product.
4) Failure caused by use not intended for the product. 5) Failure caused by modifications/alterations or repairs not carried out by CKD.
6) Failure caused by reasons unforeseen at the level of technology available at the time of delivery.
7) Failure caused by acts of nature and disasters beyond control of CKD.

The warranty stated herein covers only the delivered product itself. Any loss or damage induced by failure of the delivered product is excluded from this warranty.

Note: For details on the durability and consumable parts, contact your nearest CKD sales office.

3 Compatibility check

The customer is responsible for confirming the compatibility of CKD products with the customer's systems, machines and equipment.

Precautions for export

1 Security Trade Control

The products in this catalog and their related technologies may require approval before export or provision.

For the sake of maintaining world peace and safety, there may be cases in which approval under the Foreign Exchange and Foreign Trade Control Law is required in advance, depending on the country to where the product or related technology is being exported or provided.

The scope of products and related technologies requiring approval are listed in the Export Trade Control Order Appendix Table 1 or Foreign Exchange Order Appendix Table.

The Export Trade Control Order Appendix Table 1 and Foreign Exchange Order Appendix Table contain the following two types of information.

· "List controls" specified for items 1 to 15
· "Catch-all controls" that do not indicate specifications by item, but restriction by application (Section 16)



An application for approval is received by the Security Export Licensing Division of the Ministry of Economy, Trade and Industry or local bureaus of the Ministry of Economy, Trade and Industry.

2 Products and related technologies in this catalog

The products and related technologies in this catalog are subject to the catch-all control of the Foreign Exchange and Foreign Trade Control Law.

When exporting or providing the products or related technologies in this catalog, ensure that they are not used for arms or weapons.

3 Contact

Contact your local CKD Sales Office for information on the Security Trade Control of products and related technologies in this catalog.

Design/selection

1. Checking the specifications

⚠WARNING

- Use the product in the range of conditions specified for the product. The product in this catalog is designed for use only in a compressed air system. Use with pressures or temperatures outside the specifications range may result in damage or operation failure.
  (Refer to specifications)
  Contact CKD when using fluids other than those specified in the specifications.

2. Safety design

⚠WARNING

- Take measures to prevent physical harm or property damage in the event of failure of this product.

⚠CAUTION

- Understand the characteristics of compressed air before designing a pneumatic circuit.
  - The same functions as the mechanical, hydraulic, and electrical methods cannot be anticipated if instantaneous stopping and holding are required during an emergency stop.
  - Pop-out, air discharge, or leakage due to air compression and expansion may occur.
  - Design the circuit so that compressed air in the system is exhausted.

- Decide on a method of lubricating pneumatic components, and provide correct maintenance.
  - Is it a lubrication type?
  - Is it a no-lubrication type?
    Specify either of the above for control of lubricant.

- Check for leakage current to avoid malfunction caused by the leakage current.
  - When using a programmable controller, leakage current may cause malfunction.

3. Design by application

⚠CAUTION

- Exerts no influence on performance as it uses compressed air and a small amount of leakage is tolerable.
  Contact CKD if no leakage is required.

4. Working environment

⚠WARNING

- Install the product where it will not be exposed to rain, water or direct sunlight.

- Do not use this product in a corrosive environment. Use in such an environment could lead to damage or operation failure.

- Avoid using this product in environments where ozone is generated. Consult with CKD if ozone is generated in the air supply, as an ozone-resistant series is available.

- If ambient temperature is 5°C or below, moisture in the circuit could freeze and lead to misoperation, etc. Remove moisture to prevent freezing.

⚠CAUTION

- Confirm before use that the product will withstand the working environment.
  - Cannot be used in environments where its functions will be impeded.
    Such environments include high temperatures, chemical atmospheres, or those where chemical liquids, vibration, moisture, dripping water, coolant or gas are present.
    Environment where ozone is generated.

5. Securing of space

⚠CAUTION

- Around the pneumatic component, keep space for installation, removal, wiring, and piping work.

6. Statement in the instruction manual

⚠CAUTION

- Indicate the maintenance conditions in the device's instruction manual.
  - The product's performance may drop too low to maintain an appropriate safety level depending on usage conditions, working environment and maintenance status. With correct maintenance, the product functions can be used to the fullest.

Mounting, installation and adjustment

⚠ CAUTION

1. Installation

■ Do not remove the pneumatic component packaging and the piping port seat cap until just before starting to pipe.
- Removing the piping port cap before piping work may cause foreign matter to enter the pneumatic components from the piping port, resulting in failure or malfunction.

■ When mounting pneumatic components, do not use a mounting method that relies on support from the piping.

■ Remove the dust-proof seal of piping port just before starting to pipe.
- Removing it before starting to pipe work may cause foreign matter to enter the inside from the piping port, resulting in failure or malfunction.

2. Pre-operation confirmation

■ After connecting pipings, always check all pipe connections for air leaks before supplying compressed air.
- Apply a leakage detection agent to pipe connections with a brush and check for air leaks. Make sure that the leak detection agent does not adhere to the plastic bowl. The plastic bowl could break, which is dangerous.

3. Piping

■ When connecting pipes, wrap sealing tape in the opposite direction from the threading, from the inside position to within 2 mm from the pipe end.
- If sealing tape protrudes from the pipe threads, it could be cut when screwing the bolts in. This could cause the tape to enter the solenoid valve, causing failures.

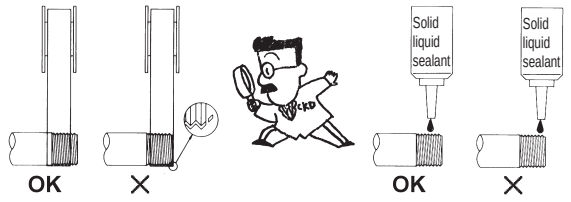

When using a liquid sealant, make sure that it does not adhere to the plastic bowl. The plastic bowl could break, which is dangerous.

■ Check that the piping connected to the pneumatic components is not dislocated due to vibration, looseness, or tension.
- Piping dislocation is dangerous.

■ Observe the following precautions when using nylon tubes or urethane tubes for piping material.
- Use flame-resistant tubes or metal steel pipes in an environment where spattering may occur.
- Use a hydraulic hose when piping is for both hydraulic and pneumatic use.
- When using the standard push-in fitting on the spiral tube, fix the base of the tube with a hose clamp. Rotation may occur, causing a reduction in holding force.
- Use a spigot fitting for high-temperature fluid. The push-in fitting cannot be used.

■ Connect piping so that connections are not dislocated by equipment movement, vibration, or tension.

■ Always flush just before piping pneumatic components.
- Any foreign matter that has entered the pipes during piping must not enter the pneumatic components.

■ Use appropriate torque to tighten the pipes when connecting them.
- The purpose is to prevent air leakage and damage to bolts.
- First tighten the bolts by hand to ensure that the threads are not damaged, then use a tool.

[Recommended values]



Port thread	Tightening torque N·m
M3	0.3 to 0.6
M5	1 to 1.5
Rc1/8	3 to 5
Rc1/4	6 to 8
Rc3/8	13 to 15
Rc1/2	16 to 18
Rc3/4	19 to 40
Rc1	41 to 70

Note: If a specific tightening torque is recommended for the model, use the torque.

4. Pneumatic source

■ Install a pneumatic filter just before the pneumatic component in the circuit.

■ When supplying compressed air after connecting pipes, do not suddenly apply high pressure.
- The pipe connection could dislocate, causing the pipe tube to fly out, leading to accidents.
- Caution: If compressed air is supplied too slowly, sealing pressure may not be generated depending on the internal sealing mechanism of the solenoid valve and may cause air leakage.

■ Air quality
- Use CKD clean air system components appropriate for your application.
- Use compressed air that does not contain oil oxides, tar, carbon, etc., from the air compressor.
- Use compressed air that does not contain solid foreign matter.

Use/maintenance

⚠CAUTION

1. Disassembly/assembly

- Pneumatic components must be disassembled and assembled by qualified personnel.
  - Pneumatic Pressure Skill Test Class 2 or higher level is required.

- Read the relevant product's instruction manual thoroughly and fully familiarize yourself with the work before disassembling or assembling the pneumatic components.
  - Personnel must be fully familiar with pneumatic component structure and operational principles and safety requirements.

2. Maintenance and inspection

- Before conducting maintenance, turn the power OFF, stop the supply of compressed air and make sure that there is no residual pressure.
  - Observe the conditions to ensure safety.

F.R.L. Units

CONTENTS

System overview 2
Series variation 4
Reading the Properties Table 20

Modular F.R.L. 23

Related products (pressure gauge/display) 363

Compact regulator, filter regulator 381

Large bore size filter/regulator 443

Precision regulator 487

Vacuum filter/vacuum regulator 529

Clean filter/regulator 541

Electro-pneumatic regulator 577

Air booster 675

Clean air system

CKD clean air system

CKD's clean air system removes impurities in compressed air effectively and economically.
Diverse clean air systems are available for each industry or application to solve any annoying issues caused by compressed air.

What are CKD's clean air systems

An air compressor is normally used to make compressed air by compressing the atmosphere. The compressed air will be highly contaminated with a high content of impurities such as water vapor and small particles too small to see which were originally in the ambient air, but now in high concentrations in proportion to the compression ratio. In some types of lubrication air compressor, lubricant is oxidized by compression heat or frictional heat to form oil oxide, or may generate solid substance such as carbon and tar, etc. Oil-free air compressors will also generate carbon particles. These factors make the compressed air more contaminated.
To remove the impurities in the compressed air, CKD's clean air systems offer an effective and inexpensive means by arranging the components suitably for a specific application, including a submicron filter to remove tar and carbon, a dryer to remove water vapor, and an oil mist filter to remove oil oxides and odor.

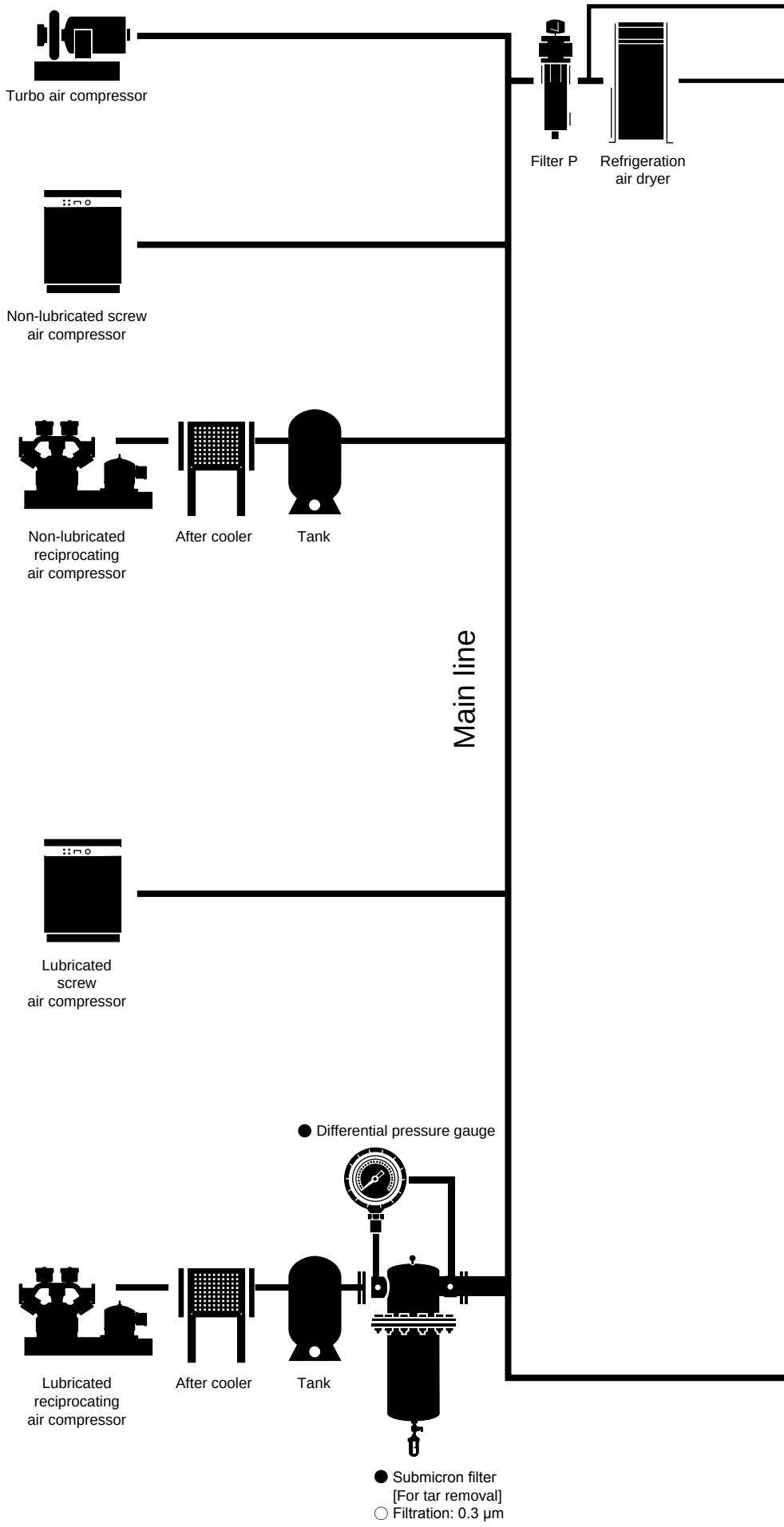

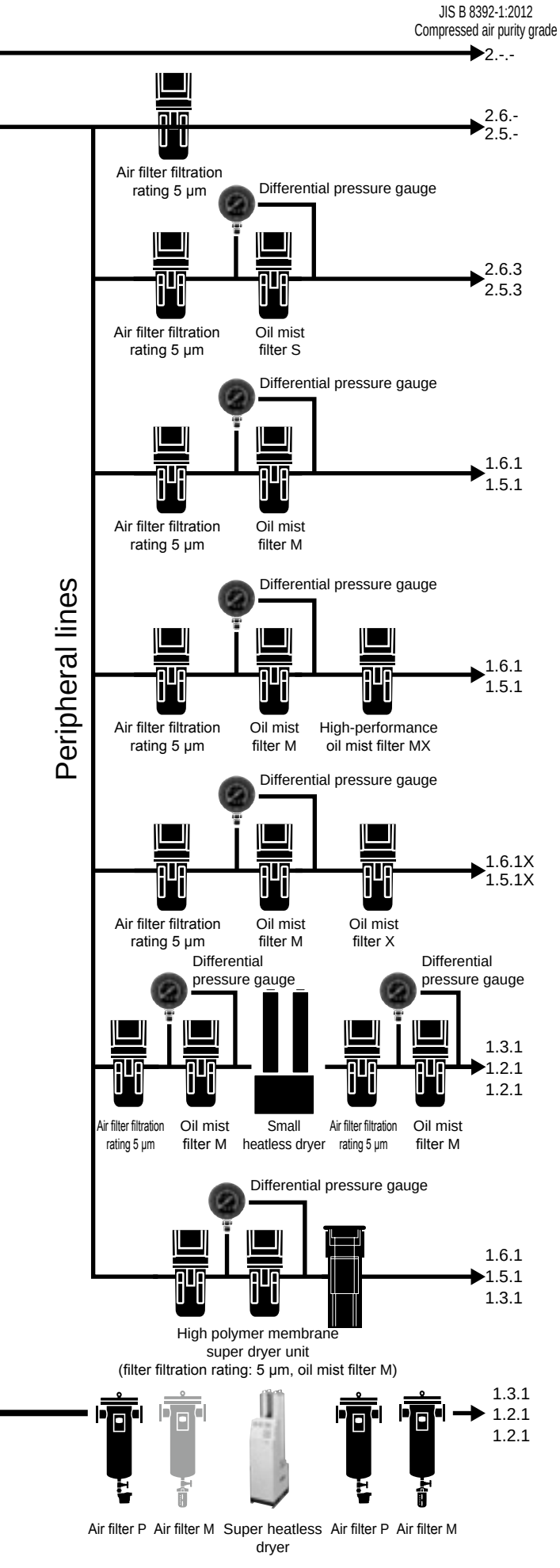

JIS B 8392-1:2012 Compressed air purity grade	Impurities in compressed air					Applications
	Solid applications (Nominal)	Moisture	Secondary side oil conc. (21°C)	Odor		
2.-.-	1 µm	-	-	-	Removing water drip/ coarse dust	· Construction, civil engineering machines ·Air for cleaning (dry air not required)
2.6.3	0.3 µm	Pressure dew point 10°C	0.5 mg/m^3	-	General dry air	· Air tool · Air drill/air screw driver · Air grinder · Labor saving devices and components/ pneumatic jigs and tools · Air chuck/air vice · Precision part cleaning air blow
2.5.3		Pressure dew point 7°C				
1.6.1	0.01 µm	Pressure dew point 10°C	0.01 mg/m^3	-	Oil-free dry clean air	· Instrumentation · Measurement · Logic control · Luxury painting · Precision mining industry
1.5.1		Pressure dew point 7°C				
1.6.1	0.01 µm	Pressure dew point 10°C	0.001 mg/m^3	-	Ultra-oil-free dry clean air	· Precise measurement · Luxury painting
1.5.1		Pressure dew point 7°C				
1.6.1	0.01 µm	Pressure dew point 10°C	0.003 mg/m^3	None	Odorless air	· Food industry · Pharmaceutical industry · Stirring/transportation/dry · Packing/brewing air
1.5.1		Pressure dew point 7°C				
1.3.1	0.01 µm	Pressure dew point -20°C	0.01 mg/m^3	-	Ultra dry air	· Drying computer rooms · Drying furnace gas · Ozone generator · Drying the insulation gas of a high-voltage generator · Drying the air supply of a high-voltage breaker · Central control instrumentation
1.2.1		Pressure dew point -40°C				
1.2.1		Pressure dew point -60°C				

*1: The system No. is based on the class below.
X in the table below indicates odor removal. "-" indicates no specification.
*2: The table shows the highest compressed air quality grade that can be achieved by the CKD clean air system. The grade varies depending on the condition at the filter inlet.

JIS B 8392-1:2012 Compressed air purity grade

Grade	Solid particle				Humidity and moisture		Oil
	Max. No. of particles per 1 m^3 for particle diameter d (µm)			Mass conc. Cp	Pressure dew point	Water concentration Cw	Total oil concentration
	0.1 < d ≤ 0.5	0.5 < d ≤ 1.0	1.0 < d ≤ 5.0	mg/m^3	°C	g/m^3	mg/m^3
0	Conditions stricter than Grade 1 to be specified by user or supplier.						
1	≤ 20,000	≤ 400	≤ 10	-	≤ -70	-	≤ 0.01
2	≤ 400,000	≤ 6,000	≤ 100	-	≤ -40	-	≤ 0.1
3	-	≤ 90,000	≤ 1,000	-	≤ -20	-	≤ 1
4	-	-	≤ 10,000	-	≤ +3	-	≤ 5
5	-	-	≤ 100,000	-	≤ +7	-	-
6	-	-	-	0 < Cp ≤ 5	≤ +10	-	-
7	-	-	-	5 < Cp ≤ 10	-	Cw ≤ 0.5	-
8	-	-	-	-	-	0.5 < Cw ≤ 5	-
9	-	-	-	-	-	5 < Cw ≤ 10	-
X	-	-	-	Cp > 10	-	Cw > 10	> 5

JIS B 8392-1:2003 has been revised to JIS B 8392-1:2012.

For example,
What is Grade 1:2:1?

- Solid particles 0.1 to 0.5 µm are 20,000 particles or less, 0.5 to 1.0 µm are 400 particles or less, and 1.0 to 5.0 µm are 10 particles or less
- Pressure dew point -40°C or less
- Oil concentration 0.01 mg/m^3 or less.

Precautions for system selection

*1: If your conditions are different, refer to the specifications in the catalog to select a model.
*2: Use anti-rust processed materials for piping (zinc plated pipe, lining pipe or stainless steel pipe). Use stainless steel pipes for ultra dry air.
*3: Always degrease the piping after oil mist filter before use.
*4: Always install the main pipe with a 1/100 slope.
*5: Install a filter immediately before the equipment to be used to remove contaminants caused in piping.

Series variation

Combination

Modular design (F.R.L.)

Series	Combination/application F	R	L	W		M	Model No.	
	Filter	Regulator	Lubricator	Filter/ regulator	Reverse filter/regulator	Oil mist filter		
● F.R.L. combination P1=0.7 MPa P2=0.5 MPa △P = 0.1 MPa	F1000-W	R1000-W	L1000-W				**C1000-W**	
	F2000-W	R2000-W	L3000-W				**C2000-W**	
	F3000-W	R2000-W	L3000-W				**C2500-W**	
	F3000-W	R3000-W	L3000-W				**C3000-W**	
	F4000-W	R4000-W	L4000-W				**C4000-W**	
	F6000-W	R6000-W	L8000-W				**C6500-W**	
	F8000-W	R8000-W	L8000-W				**C8000-W**	
● W.L. combination P1=0.7 MPa P2=0.5 MPa △P = 0.1 MPa			L1000-W	W1000-W			**C1010-W**	
			L3000-W	W2000-W			**C2010-W**	
			L3000-W	W3000-W			**C3010-W**	
			L4000-W	W4000-W			**C4010-W**	
			L8000-W	W8000-W			**C8010-W**	
● F.R. combination P1=0.7 MPa P2=0.5 MPa △P = 0.1 MPa	F1000-W	R1000-W					**C1020-W**	
	F2000-W	R2000-W					**C2020-W**	
	F3000-W	R2000-W					**C2520-W**	
	F3000-W	R3000-W					**C3020-W**	
	F4000-W	R4000-W					**C4020-W**	
	F6000-W	R6000-W					**C6020-W**	
	F8000-W	R8000-W					**C8020-W**	
● F.M.R. combination P1=0.7 MPa	F1000-W	R1000-W				M1000-W	**C1030-W**	
	F2000-W	R2000-W				M2000-W	**C2030-W**	
	F3000-W	R2000-W				M3000-W	**C2530-W**	
	F3000-W	R3000-W				M3000-W	**C3030-W**	
	F4000-W	R4000-W				M4000-W	**C4030-W**	
	F6000-W	R6000-W				M6000-W	**C6030-W**	
	F8000-W	R8000-W				M8000-W	**C8030-W**	
● W.M. combination P2=0.7 MPa				W1000-W		M1000-W	**C1040-W**	
				W2000-W		M2000-W	**C2040-W**	
				W3000-W		M3000-W	**C3040-W**	
				W4000-W		M4000-W	**C4040-W**	
				W8000-W		M8000-W	**C8040-W**	
● R.M. combination P2=0.7 MPa		R1000-W				M1000-W	**C1050-W**	
		R2000-W				M2000-W	**C2050-W**	
		R2000-W				M3000-W	**C2550-W**	
		R3000-W				M3000-W	**C3050-W**	
		R4000-W				M4000-W	**C4050-W**	
		R6000-W				M6000-W	**C6050-W**	
		R8000-W				M8000-W	**C8050-W**	
● F.M. combination P1=0.7 MPa	F1000-W					M1000-W	**C1060-W**	
	F2000-W					M2000-W	**C2060-W**	
	F3000-W					M3000-W	**C3060-W**	
	F4000-W					M4000-W	**C4060-W**	
	F6000-W					M6000-W	**C6060-W**	
	F8000-W					M8000-W	**C8060-W**	
● F.F.M. combination P1=0.7 MPa	F3000-W(5 μm) F3000-W(0.3 μm)					M3000-W	**C3070-W**	
	F4000-W(5 μm) F4000-W(0.3 μm)					M4000-W	**C4070-W**	
	F6000-W(5 μm) F6000-W(0.3 μm)					M6000-W	**C6070-W**	
	F8000-W(5 μm) F8000-W(0.3 μm)					M8000-W	**C8070-W**	

CKD

* P1 = primary pressure P2 = secondary pressure △P = differential pressure

Port size												Max. flow rate m^3/min (reference)	Page
ø4	ø6	ø8	1/8	1/4	3/8	1/2	3/4	1	1 1/4	1 1/2	2		
			●	●								0.45/0.63	34
				●	●							1.2/1.7	
				●	●							1.2/1.7	
				●	●							1.28/1.75	
				●	●	●	● Note					1.43/2.4/3.0	
							●	●				4.5/5.0	
							●	●				7.0/7.5	
			●	●								0.45/0.63	42
				●	●							1.2/1.7	
				●	●							1.28/1.75	
				●	●	●	● Note					1.43/2.4/3.0	
							●	●				7/7.5	
			●	●								0.77/1.1	48
				●	●							1.75/2.5	
				●	●							1.75/2.5	
				●	●							2.0/2.6	
				●	●	●	● Note					2.5/4.4/5.0	
							●	●				7/7.7	
							●	●				10	
			●	●								0.15	54
				●	●							0.25	
				●	●							0.36	
				●	●							0.36	
				●	●	●	● Note					0.825	
							●	●				1.27	
							●	●				2.6	
			●	●								0.15	60
				●	●							0.25	
				●	●							0.36	
				●	●	●	● Note					0.825	
							●	●				2.6	
			●	●								0.15	66
				●	●							0.25	
				●	●							0.36	
				●	●							0.36	
				●	●	●	● Note					0.825	
							●	●				1.27	
							●	●				2.6	
			●	●								0.15	72
				●	●							0.25	
				●	●							0.36	
				●	●	●	● Note					0.825	
							●	●				1.27	
							●	●				2.6	
				●	●							0.225	78
				●	●	●	● Note					0.5	
							●	●				0.8	
							●	●				1.1	

Note: Pipe adaptor is mounted.

Series variation

F.R.L. unit

Modular design (F.R.L.)

Series	Model No.	Combination/application					Combination option/application				
		F	R	L	W	M	D	S	P	V(V1)	K
		Filter	Regulator	Lubricator	Filter/ Regulator	Oil mist filter	Distributor	Pressure switch		Residual pressure exhaust valve	
● F.R.L. combination  *5	C1000-W	F1000-W	R1000-W	L1000-W			D101-W	P1100-W		V1000-W	
	C2000-W	F2000-W	R2000-W	L3000-W			D401-W	P4100-W	P4000-W	V3000-W	V3010-W
	C2500-W	F3000-W	R2000-W	L3000-W			D401-W	P4100-W	P4000-W	V3000-W	V3010-W
	C3000-W	F3000-W	R3000-W	L3000-W			D401-W	P4100-W	P4000-W	V3000-W	V3010-W
	C4000-W	F4000-W	R4000-W	L4000-W			D401-W	P4100-W	P4000-W	V3000-W	V3010-W
	C4000-20-W	F4000-W	R4000-W	L4000-W			D401-W	P4100-W	P4000-W	V3000-W	V3010-W
	C6500-W	F6000-W	R6000-W	L8000-W			D801-W	P8100-W			V6010-W
	C8000-W	F8000-W	R8000-W	L8000-W			D801-W	P8100-W			V6010-W
● W.L. combination  *5	C1010-W			L1000-W	W1000-W			P1100-W		V1000-W	
	C2010-W			L3000-W	W2000-W			P4100-W	P4000-W	V3000-W	V3010-W
	C3010-W			L3000-W	W3000-W			P4100-W	P4000-W	V3000-W	V3010-W
	C4010-W			L4000-W	W4000-W			P4100-W	P4000-W	V3000-W	V3010-W
	C4010-20-W			L4000-W	W4000-W			P4100-W	P4000-W	V3000-W	V3010-W
	C8010-W			L8000-W	W8000-W			P8100-W			V6010-W
● F.R. combination  *5	C1020-W	F1000-W	R1000-W				D101-W	P1100-W		V1000-W	
	C2020-W	F2000-W	R2000-W				D401-W	P4100-W	P4000-W	V3000-W	V3010-W
	C2520-W	F3000-W	R2000-W				D401-W	P4100-W	P4000-W	V3000-W	V3010-W
	C3020-W	F3000-W	R3000-W				D401-W	P4100-W	P4000-W	V3000-W	V3010-W
	C4020-W	F4000-W	R4000-W				D401-W	P4100-W	P4000-W	V3000-W	V3010-W
	C4020-20-W	F4000-W	R4000-W				D401-W	P4100-W	P4000-W	V3000-W	V3010-W
	C6020-W	F6000-W	R6000-W				D801-W	P8100-W			V6010-W
	C8020-W	F8000-W	R8000-W				D801-W	P8100-W			V6010-W
● F.M.R. combination  *5	C1030-W	F1000-W	R1000-W			M1000-W	D101-W	P1100-W		V1000-W	
	C2030-W	F2000-W	R2000-W			M2000-W	D401-W	P4100-W	P4000-W	V3000-W	V3010-W
	C2530-W	F3000-W	R2000-W			M3000-W	D401-W	P4100-W	P4000-W	V3000-W	V3010-W
	C3030-W	F3000-W	R3000-W			M3000-W	D401-W	P4100-W	P4000-W	V3000-W	V3010-W
	C4030-W	F4000-W	R4000-W			M4000-W	D401-W	P4100-W	P4000-W	V3000-W	V3010-W
	C4030-20-W	F4000-W	R4000-W			M4000-W	D401-W	P4100-W	P4000-W	V3000-W	V3010-W
	C6030-W	F6000-W	R6000-W			M6000-W	D801-W	P8100-W			V6010-W
	C8030-W	F8000-W	R8000-W			M8000-W	D801-W	P8100-W			V6010-W
● W.M. combination  *5	C1040-W				W1000-W	M1000-W		P1100-W		V1000-W	
	C2040-W				W2000-W	M2000-W		P4100-W	P4000-W	V3000-W	V3010-W
	C3040-W				W3000-W	M3000-W		P4100-W	P4000-W	V3000-W	V3010-W
	C4040-W				W4000-W	M4000-W		P4100-W	P4000-W	V3000-W	V3010-W
	C4040-20-W				W4000-W	M4000-W		P4100-W	P4000-W	V3000-W	V3010-W
	C8040-W				W8000-W	M8000-W		P8100-W			V6010-W
● Filter/regulator 	W1000-W							P1100-W		V1000-W	
	W2000-W							P4100-W		V3000-W	
	W3000-W							P4100-W		V3000-W	
	W4000-W							P4100-W		V3000-W	
● Reverse filter/regulator 	W1100-W							P1100-W		V1000-W	
	W2100-W							P4100-W		V3000-W	
	W3100-W							P4100-W		V3000-W	
	W4100-W							P4100-W		V3000-W	

*1: Two T-brackets are included with the combination option.
*2: The T type bracket installation position changes depending on the combination.
*3: T type bracket standard installation position is on the inner side of the end product of each combination.
Note that if the pipe adaptor is combined on the end, the bracket is installed on the inner side of the product past the pipe adaptor.

CKD

Series variation

F.R.L. unit (Other related products/attachments)

Combination option list (U□□□)																			Combination position
D	S	P	V	V1	K	DS	DP	DV	DK	DSV	DSK	DPV	DPK	SV	SV1	SK	PV	PK	
○	○		○			○		○		○				○					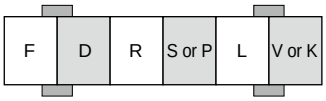
○	○	○	○		○	○	○	○	○	○	○	○	○	○		○	○	○	
○	○	○	○		○	○	○	○	○	○	○	○	○	○		○	○	○	
○	○	○	○		○	○	○	○	○	○	○	○	○	○		○	○	○	
○	○	○	○		○	○	○	○	○	○	○	○	○	○		○	○	○	
○	○	○	○		○	○	○	○	○	○	○	○	○	○		○	○	○	
○	○				○	○			○		○					○			
○	○				○	○			○		○					○			
	○		○											○					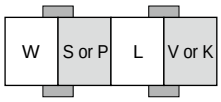
	○	○	○		○									○		○	○	○	
	○	○	○		○									○		○	○	○	
	○	○	○		○									○		○	○	○	
	○	○	○		○									○		○	○	○	
	○				○											○			
○	●		○	○		●		○		○				○	○				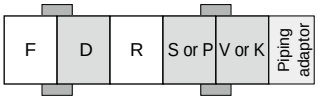 *3 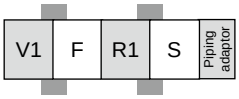 The pipe adaptor can be assembled on models marked with ●.
○	●	○	○	○	○	●	○	○	○	○	○	○	○	○	○	○	○	○	
○	●	○	○	○	○	●	○	○	○	○	○	○	○	○	○	○	○	○	
○	●	○	○	○	○	●	○	○	○	○	○	○	○	○	○	○	○	○	
○	●	○	○	○	○	●	○	○	○	○	○	○	○	○	○	○	○	○	
○	●	○	○	○	○	●	○	○	○	○	○	○	○	○	○	○	○	○	
○	●				○	●			○		○					○			
○	●				○	●			○		○					○			
○	●		○			●		○		○				○					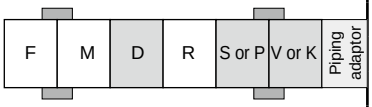 *3 The pipe adaptor can be assembled on models marked with ●.
○	●	○	○		○	●	○	○	○	○	○	○	○	○		○	○	○	
○	●	○	○		○	●	○	○	○	○	○	○	○	○		○	○	○	
○	●	○	○		○	●	○	○	○	○	○	○	○	○		○	○	○	
○	●	○	○		○	●	○	○	○	○	○	○	○	○		○	○	○	
○	●	○	○		○	●	○	○	○	○	○	○	○	○		○	○	○	
○	●				○	●			○		○					○			
○	●				○	●			○		○					○			
	○		○											○					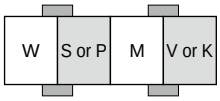
	○	○	○		○									○		○	○	○	
	○	○	○		○									○		○	○	○	
	○	○	○		○									○		○	○	○	
	○	○	○		○									○		○	○	○	
	○				○											○			
	○		○											○					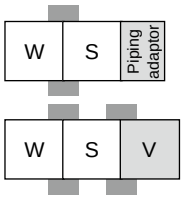
	○		○											○					
	○		○											○					
	○		○											○					
	○			○											○				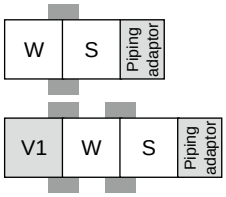
	○			○											○				
	○			○											○				
	○			○											○				

*4: Use customized combination specifications to change the bracket installation position and for combinations other than combination options.
*5: The pipe adaptor set A400-20-W is assembled on both ends of the C40*0-20-W (port size Rc 3/4).
For products other than the pipe adaptor, the port size is “15” (Rc 1/2).
*6: Only the upward branch direction is available for option “D”.

Series variation

Combination, filter/regulator

[Combination]

	Series name	Compatible product(s)	Model No.	
Separated	● F.R.L. kit P1=0.7 MPa P2=0.5 MPa △P = 0.1 MPa 	Set (with accessory)	**K60570**	

[Filter/regulator]

	Series	Compatible product(s) F	R	L	W		M	Model No.	
		Filter	Regulator	Lubricator	Filter/ regulator	Reverse filter/regulator	Oil mist filter		
Modular design (F.R.L.)	● Filter/regulator P1=0.7 MPa P2=0.5 MPa △P = 0.1 MPa 				●			**WB500 (small)**	
								W1000-W	
								W2000-W	
								W3000-W	
								W4000-W	
								W8000-W	
	● Filter/regulator flame-resistant series P1=0.7 MPa P2=0.5 MPa △P = 0.1 MPa 				●			**W3000-G4**	
								W4000-G4	
								W8000-G4	
	● Reverse filter/regulator P1=0.7 MPa P2=0.5 MPa △P = 0.1 MPa 					●		**W1100-W**	
								W2100-W	
								W3100-W	
								W4100-W	
								W8100-W	
	● Reverse filter/regulator flame-resistant series P1=0.7 MPa P2=0.5 MPa △P = 0.1 MPa 					●		**W3100-G4**	
								W4100-G4	
								W8100-G4	
	● Filter/regulator outdoor series P1=0.7 MPa P2=0.5 MPa △P = 0.1 MPa 				●			**WW4000**	
								WW8000	

	Series	Compatible product(s) F	R	L	W		M	Model No.	
		Filter	Regulator	Lubricator	Filter/ regulator	Reverse filter/regulator	Oil mist filter		
Compact	● Compact filter/regulator P1=0.7 MPa P2=0.5 MPa △P = 0.1 MPa 	Push-in fitting and mounting bracket integrated						**WB500**	

	Series	Compatible product(s) F	R	L	W		M	Model No.	
		Filter	Regulator	Lubricator	Filter/ regulator	Reverse filter/regulator	Oil mist filter		
Separated	● 7000 Series P1=0.7 MPa P2=0.5 MPa △P = 0.1 MPa 	Filter and regulator integrated filtration rating 5 µm						**B7019-*C**	

* P1 = primary pressure P2 = secondary pressure △P = differential pressure

	Port size												Max. flow rate m³/min (reference)	Page
	ø4	ø6	ø8	1/8	1/4	3/8	1/2	3/4	1	1 1/4	1 1/2	2		
				●	●								0.2/0.3	410

	Port size												Max. flow rate m³/min (reference)	Page
	ø4	ø6	ø8	1/8	1/4	3/8	1/2	3/4	1	1 1/4	1 1/2	2		
	●	●											0.08/0.18	388
				●	●								0.83/1.15	90
					●	●							1.5/2.0	
					●	●	●						2.15/2.43/2.43	
					●	●	●						2.5/4.35/4.75	
								●	●				10	
					●	●							2.15/2.43	252
					●	●	●						2.5/4.35/4.75	
								●	●				10	
				●	●								0.83/1.15	98
					●	●							1.5/2.0	
					●	●	●						2.15/2.43/2.43	
					●	●	●						2.5/4.35/4.75	
								●	●				10.0	
					●	●							2.15/2.43	258
					●	●	●						2.5/4.35/4.75	
								●	●				10.0	
					●	●	●						2.5/4.35/4.75	324
								●	●				10	

	Port size												Max. flow rate m³/min (reference)	Page
	ø4	ø6	ø8	1/8	1/4	3/8	1/2	3/4	1	1 1/4	1 1/2	2		
	●	●											0.08/0.18	388

	Port size												Max. flow rate m³/min (reference)	Page
	ø4	ø6	ø8	1/8	1/4	3/8	1/2	3/4	1	1 1/4	1 1/2	2		
				●	●								0.5/0.9	412

Modular design

Series	Compatible product(s) F: Filter	R: Regulator	L: Lubricator	W Regulator: Filter/ regulator	W Regulator: Reverse filter/regulator	M: Oil mist filter	Model No.
● Filter P1=0.7 MPa △P = 0.02 MPa 	●						**F1000-W**
							F2000-W
							F3000-W
							F4000-W
							F6000-W
							F8000-W
● Filter/flame-resistant series P1=0.7 MPa △P = 0.02 MPa 	●						**F3000-G4**
							F4000-G4
							F8000-G4
● Filter/medium pressure series P1=1.3 MPa △P = 0.02 MPa 	●						**FM3000-W**
							FM4000-W
							FM6000-W
							FM8000-W
● Filter/outdoor series P1=0.7 MPa △P = 0.02 MPa 	●						**FW4000**
							FW8000

Clean-room

Series	Compatible product(s) F: Filter	R: Regulator	L: Lubricator	W Regulator: Filter/ regulator	W Regulator: Reverse filter/regulator	M: Oil mist filter	Model No.
● Inline clean filter P1=0.7 MPa △P = 0.03 MPa 	●						**FCS500**
							FCS1000

Inline filter

Series	Compatible product(s)	Model No.
● Inline filter P1=0.7 MPa △P = 0.02 MPa 	Inline push-in fitting, for both positive and negative pressures	**FSL100**
		FSL200
		FSL500

Separated

Series name	Compatible product(s)	Model No.
● Air filter P1=0.7 MPa △P = 0.02 MPa 	Wide variation Filtration rating 5 µm	**A1019-*C**
		1138-*-E
		1126-*-E
● Heavy duty air filter P1=0.7 MPa △P = 0.002 MPa 	High moisture removal type Filtration rating 5 µm	**A1338**
		1326
● Submicron air filter P1=0.7 MPa △P = 0.01 MPa 	Tar removing Filtration rating 0.3 µm	**1138-*C-EY**
		A1338-*C-Y
		1126-*C-EY
		1326-*C-Y
● Micro alescer micro naught P1=0.7 MPa △P = 0.01 MPa 	Oil removing Oil removing ratio 0.1 PPMW/W	**1219-2C**
		1238-6C
		1226-8C
		1126J-*C
● Micro alescer micro naught P1=0.7 MPa △P = 0.01 MPa 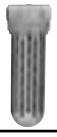	For deodorizing	**1238-6C-X**
		1226-8C-X
		1226J-*C-X

* P1 = primary pressure P2 = secondary pressure △P = differential pressure

Port size												Max. flow rate m³/min (reference)	Page
ø4	ø6	ø8	1/8	1/4	3/8	1/2	3/4	1	1 1/4	1 1/2	2		
			●	●								0.46/0.61	106
				●	●							1.3/1.7	
				●	●							1.23/1.5	
				●	●	●						1.32/2.14/3.0	
							●	●				5.6/6.2	
							●	●				6.4/6.8	
				●	●							1.23/1.5	266
				●	●	●						5.6/6.2	
							●	●				6.4/6.8	
				●	●	●						1.6/2.0	296
				●	●							1.9/2.8/3.8	
							●	●				6.7/8.1	
							●	●				8.1/9.0	
				●	●	●						1.32/2.14/3.0	330
							●	●				6.4/6.8	

Port size														Max. flow rate m³/min (reference)	Page
ø4	ø6	ø8	ø10	ø12	1/8	1/4	3/8	1/2	3/4	1	1 1/4	1 1/2	2		
●	●	●			●	●								0.05 (ø4,ø6,1/8) / 0.08 (ø8,1/4)	544
		●	●	●		●	●							0.3 to 0.4	548

Port size														Max. flow rate m³/min (reference)	Page
ø4	ø6	ø8	ø10	ø12	1/8	1/4	3/8	1/2	3/4	1	1 1/4	1 1/2	2		
●	●													0.07/0.10	406
●	●													0.08/0.14	
	●	●	●											0.18/0.36/0.44	

Port size												Max. flow rate m³/min (reference)	Page
ø4	ø6	ø8	1/8	1/4	3/8	1/2	3/4	1	1 1/4	1 1/2	2		
			●	●								0.55/0.7	414
							●	●				5.5/7.0	444
									●	●	●	18/21/25	
							●	●				1.55	448
									●	●	●	5.8	
							●	●				1.55	450
							●	●				1.55	
									●	●	●	4.9	
									●	●	●	4.9	
				●								0.056	416
							●					1.27	452
								●				2.49	
										●	●	4.8	
							●					1.27	454
								●				2.49	
										●	●	4.8	

Series variation

Oil mist filter

Series	Compatible product(s) F: Filter	R: Regulator	L: Lubricator	W SELEX: Filter/ regulator	W SELEX: Reverse filter/regulator	M: Oil mist filter	Model No.
Modular design							
● Oil mist filter (S type) P1=0.7 MPa △P = 0.01 MPa · Filtration: 0.3 μm · Secondary side oil concentration 0.5 mg/m³ 						●	**M1000-W*-S** **M2000-W*-S** **M3000-W*-S** **M4000-W*-S** **M6000-W*-S** **M8000-W*-S**
● Oil mist filter (M type) P1=0.7 MPa △P = 0.01 MPa · Filtration: 0.01 μm · Secondary side oil concentration 0.01 mg/m³ 						●	**M1000-W** **M2000-W** **M3000-W** **M4000-W** **M6000-W** **M8000-W**
● Oil mist filter (X type) P1=0.7 MPa △P = 0.01 MPa · Filtration rating: suction by activated charcoal · Secondary side oil concentration 0.003 mg/m³ 						●	**M1000-W*-X** **M2000-W*-X** **M3000-W*-X** **M4000-W*-X** **M6000-W*-X** **M8000-W*-X**
● High-performance oil mist filter P1=0.7 MPa △P = 0.01 MPa · Filtration: 0.01 μm · Secondary side oil concentration 0.001 mg/m³ 						●	**MX1000-W** **MX3000-W** **MX4000-W** **MX6000-W** **MX8000-W**
● Oil mist filter medium pressure (S type) P1=1.4 MPa △P = 0.01 MPa · Filtration: 0.3 μm · Secondary side oil concentration 0.5 mg/m³ 						●	**MM3000-W*-S** **MM4000-W*-S** **MM6000-W*-S** **MM8000-W*-S**
● Oil mist filter medium pressure (M type) P1=1.4 MPa △P = 0.01 MPa · Filtration: 0.01 μm · Secondary side oil concentration 0.01 mg/m³ 						●	**MM3000-W** **MM4000-W** **MM6000-W** **MM8000-W**
● Oil mist filter medium pressure (X type) P1=1.4 MPa △P = 0.01 MPa · Filtration rating: suction by activated charcoal · Secondary side oil concentration 0.003 mg/m³ 						●	**MM3000-W*-X** **MM4000-W*-X** **MM6000-W*-X** **MM8000-W*-X**
● Oil mist filter outdoor (S type) P1=0.7 MPa △P = 0.01 MPa · Filtration: 0.3 μm · Secondary side oil concentration 0.5 mg/m³ 						●	**MW4000-S** **MW8000-S**
● Oil mist filter outdoor (M type) P1=0.7 MPa △P = 0.01 MPa · Filtration: 0.01 μm · Secondary side oil concentration 0.01 mg/m³ 						●	**MW4000-M** **MW8000-S**

* P1 = primary pressure P2 = secondary pressure △P = differential pressure

	Port size												Max. flow rate m^3/min	Page
	ø4	ø6	ø8	1/8	1/4	3/8	1/2	3/4	1	1 1/4	1 1/2	2		
				●	●								0.15	116
					●	●							0.31	
					●	●							0.45	
					●	●	●						1	
								●	●				1.4	
								●	●				2.9	
				●	●								0.15	116
					●	●							0.25	
					●	●							0.36	
					●	●	●						0.825	
								●	●				1.27	
								●	●				2.6	
				●	●								0.15	116
					●	●							0.36	
					●	●							0.45	
					●	●	●						1.0	
								●	●				1.4	
								●	●				2.9	
				●	●								0.075	128
					●	●							0.18	
					●	●	●						0.37	
								●	●				0.67	
								●	●				1.48	
					●	●							0.61	302
					●	●	●						1.37	
								●	●				1.92	
								●	●				3.98	
					●	●							0.49	302
					●	●	●						1.13	
								●	●				1.74	
								●	●				3.56	
					●	●							0.61	302
					●	●	●						1.37	
								●	●				1.92	
								●	●				3.98	
					●	●	●						0.825	334
								●	●				2.6	
					●	●	●						1	334
								●	●				2.9	

Series variation

Regulator

	Series	Compatible product(s) F: Filter	R: Regulator	R: Reverse regulator	L: Lubricator	W Regulator: Filter/ regulator	W Regulator: Reverse filter/regulator	M: Oil mist filter	Model No.
Modular design	● Regulator P1=0.7 MPa P2=0.5 MPa △P = 0.1 MPa 		●						R1000-W R2000-W R3000-W R4000-W R6000-W R8000-W
	● Regulator/flame-resistant series P1=0.7 MPa P2=0.5 MPa △P = 0.1 MPa 		●						R3000-G4 R4000-G4 R8000-G4
	● Regulator oil-prohibition series P1=0.7 MPa P2=0.5 MPa 		●						RN3000-W RN4000-W RN8000
	● Regulator medium pressure series P1=1.6MPa P2=0.5 MPa 		●						RM3000-W RM4000-W
	● Regulator/outdoor series P1=0.7 MPa P2=0.5 MPa △P = 0.1 MPa 		●						RW4000 RW8000
	● Reverse regulator P1=0.7 MPa P2=0.5 MPa △P = 0.1 MPa 			●					R1100-W R2100-W R3100-W R4100-W R6100-W R8100-W
Compact	● Regulator P1=0.7 MPa P2=0.5 MPa △P = 0.1 MPa 		●						RA800 RB500
	● Block manifold regulator 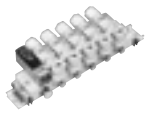		●						MNRB500A MNRB500B
Precision	● Regulator P1=0.7 MPa P2=0.5 MPa △P = 0.1 MPa 		●						RJB500
	● Block manifold regulator 		●						MNRJB500A MNRJB500B
Clean-room	● Clean regulator P1=0.7 MPa P2=0.5 MPa △P = 0.1 MPa 		●						RC2000
	● Clean regulator P1=0.7 MPa P2=0.5 MPa △P = 0.1 MPa 		●						2619

[Electro pneumatic regulator]
Refer to page 580 for the series variation of electro pneumatic regulators.

* P1 = primary pressure P2 = secondary pressure △P = differential pressure

Port size												Max. flow rate m^3/min (reference)	Page
ø4	ø6	ø8	1/8	1/4	3/8	1/2	3/4	1	1 1/4	1 1/2	2		
			●	●								0.77/1.35	136
				●	●							1.75/2.5	
				●	●							2.0/2.6	
				●	●	●						2.5/4.4/5.0	
							●	●				7/7.7	
							●	●				14.0/11.0	
				●	●							2.0/2.6	274
				●	●	●						2.5/4.4/5.0	
							●	●				14.0/11.0	
				●	●							1.6/2.6	288
				●	●	●						2.4/3.0/3.0	
							●	●				4.5/6	
				●	●							2.0	308
				●	●	●						3.0	
				●	●	●						2.5/4.4/5.0	338
							●	●				14.0/11.0	
			●	●								0.77/1.35	144
				●	●							1.75/2.5	
				●	●							2.0/2.6	
				●	●	●						2.5/4.4/5.0	
							●	●				7/7.7	
							●	●				14.0/11.0	
			●	●								0.35	382
●	●											0.1/0.2	386
●	●	●										0.1/0.2	392
●	●											0.1/0.2	
●	●											0.06/0.08	490
●	●	●										0.06/0.08	492
●	●											0.06/0.08	
				●	●	●						0.8	566
			●	●								0.18/0.18	570

Series variation

Regulator/lubricator

[Regulator]

	Series name	Compatible product(s)	Model No.	
Separated	● Regulator P1=0.7 MPa P2=0.5 MPa △P = 0.1 MPa 	Extensive models	**B2019-*C**	
			2215-*C	
	● Reverse regulator P1=0.7 MPa P2=0.5 MPa △P = 0.1 MPa 	Check valve integrated, no by-pass circuit required	**2419-*C**	
			2415-*C	
	● Dial air regulator P1=0.7 MPa P2=0.5 MPa 	With setting dial	**2302-*C**	
			2303-*C	
			2304-*C	
	● Remote dial air regulator P1=0.7 MPa P2=0.5 MPa 	For remote control	**2302-*C-R**	
			2303-*C-R	
			2304-*C-R	
	● Relief valve Set pressure 0.7 MPa, pressure rise 0.08 MPa 	For maintaining the set pressure	**B6061-*C**	

[Lubricator]

	Series	Compatible product(s)							Model No.	
		F	R		L	W		M		
		Filter	Regulator	Reverse regulator	Lubricator	Filter/ regulator	Reverse filter/regulator	Oil mist filter		
Modular design	● Lubricator P1=0.5 MPa △P = 0.3 MPa 				●				**L1000-W**	
									L3000-W	
									L4000-W	
									L8000-W	

	Series name	Compatible product(s)	Model No.	
Separated	● Lubricator econo-mist P1=0.5 MPa △P = 0.03 MPa 	Supplies fine oil mist	**A3019-*C**	
			3003E-*C	
			3004E-*C	
	● Lubricator auto-fill 	Automatic supply	**3003E-*C-V**	

[Drain separator]

Series name	Compatible product(s)	Model No.	
● Drain separator 	Lightweight compact drain separator	**FX1004**	
		FX1011	
		FX1037	

* P1 = primary pressure P2 = secondary pressure △P = differential pressure

	Port size											Max. flow rate m^3/min (reference)	Page
	ø4	ø6	ø8	1/8	1/4	3/8	1/2	3/4	1	1 1/4	1 1/2	2	
				●	●								0.5	418
								●	●	●			14	458
				●	●								0.5	420
								●	●	●			14	462
					●	●	●	●					3.0	464
								●	●	●			10.0	
											●	●	30.0	
					●	●	●	●					3.0	467
								●	●	●			10.0/30.0	
											●	●	30	
				●	●								0.15	422

* P1 = primary pressure △P2 = differential pressure

	Port size											Max. flow rate m^3/min (reference)	Page
	ø4	ø6	ø8	1/8	1/4	3/8	1/2	3/4	1	1 1/4	1 1/2	2	
				●	●								0.55/0.7	152
					●	●							1.1/2.25	
					●	●	●						1/1.7/2.7	
								●	●				6.3/10.0	

	Port size											Max. flow rate m^3/min (reference)	Page
	ø4	ø6	ø8	1/8	1/4	3/8	1/2	3/4	1	1 1/4	1 1/2	2	
				●	●								0.1/0.4	424
								●	●				3.5/4.0	470
										●	●	●	15/20	
								●	●				3.5/4.0	474

	Port size											Max. flow rate m^3/min (reference)	Page
	ø4	ø6	ø8	1/8	1/4	3/8	1/2	3/4	1	1 1/4	1 1/2	2	
					●	●							0.55	160
					●	●	●						1.80	
								●	●				6.10	

Series variation

Residual pressure exhaust valve, other related products

[Residual pressure exhaust valve]

Series name	Compatible product(s)	Model No.
● Residual pressure exhaust valve 	Preventing accidents due to residual pressure in pneumatic lines.	**V1000-W**
		V3000-W
● Residual pressure exhaust valve with keyhole (OSHA compliant)	Preventing accidents due to residual pressure in pneumatic lines.	**V3010-W**
		V6010-W
● Quick valve 	2- and 3-port valves are available.	**2QV**
		3QV
● Residual pressure exhaust valve with spool position detection 	Industry's smallest class residual pressure exhaust valve, certified for safety standard ISO 13849-1	**SNS**
● 3-port solenoid valve with spool position detection 	Spool position detection for reliable open/close detection Module connection also allows double cutoff	**SNP**
● Slow start valve 	Ensuring safety when starting and stopping	**V3301-W**
		V3321-W

[Other related products]

Series name	Compatible product(s)	Model No.
● Clean exhaust filter 	Provide direct exhaust within a clean room	**FAC10**
		FAC100
		FAC200
		FAC300
● Exhaust cleaner 	For exhaust, improving the environment	**FA331-10A**
		FA431-15A
		FA531-20A
		FA631-25A
		FA731-40A
		FA831-50A
● Drain discharger 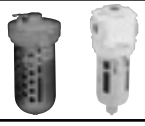	Automatic drain	**DT3000/4000-W**
	Heavy duty drain	**DB1000/3000**
	Tank drain	**5100-4C**
● Moisture indicator (P1 = 0.7 MPa)	For dew point monitor of desiccant dryer	**6119-2C**
● Air pressure switch 	Setting accuracy within ±0.02 MPa	**P4000-W**
		P*100-W
		APE-8T
		APE-8N
		APE-8F
		APS
● Pressure gauge 	Low-profile pressure gauge ideal for embedding in devices	**G401**
	Pressure gauge with safety marker	**G40D**
	Pressure gauge with limit marker	**G45D**
	General-use pressure gauge	**G49D/G59D**
	Pressure gauge for panel mounting	**G53D**
	Pressure gauge with switch	**G52D**
	Miniature pressure gauge	**G29D**
	Compact round pressure gauge	**G39D**
	Vacuum pressure gauge	**VG41D**
● Differential pressure gauge 	Air filter life measuring	**GA400-8-P02**

Port size															Max. flow rate	Page
ø4	ø6	ø8	ø10	ø12	1/16	1/8	1/4	3/8	1/2	3/4	1	1 1/4	1 1/2	2		
						●	●									182
							●	●	●							
							●	●	●							185
										●	●					
●	●	●	●	●		●	●	●	●							188
●	●	●	●	●		●	●	●	●							
								●	●							196
								●	●	●						206
							●	●	●							214
							●	●	●							

Port size															Max. flow rate	Page
ø4	ø6	ø8	ø10	ø12	1/16	1/8	1/4	3/8	1/2	3/4	1	1 1/4	1 1/2	2		
	●														10	554
						●	●								100	
								●	●						200	
								●	●						600	
								●							0.3	778
									●						0.6	
										●					1	
											●				3	
													●		6	
														●	10	
								●	●							1906
									●	●	●					1914
									●							1922
							●								0.05	379
							●	●	●							166
						●	●	●	●	●	●					168
							●									172
							●									
						●										176
															0 to 0.4 MPa 0 to 1.0 MPa	364
						●	●								0 to 1.0 MPa 0 to 0.4 MPa	365
						●	●								0 to 0.2 MPa 0 to 0.4 MPa 0 to 1.0 MPa	366
						●	●								0 to 0.2 MPa 0 to 0.4 MPa 0 to 1.0 MPa 0 to 2.0 MPa	367
						●	●								0 to 0.2 MPa 0 to 0.4 MPa 0 to 1.0 MPa	370
							●								0 to 1.0 MPa	372
					●	●									0 to 1.0 MPa	374
						●									0 to 0.4 MPa 0 to 1.0 MPa	375
						●									-100 to 0 kPa	376
							●									378

Reading the Properties Table

1. Combination, filter regulator, and regulator flow characteristics

The flow characteristics table indicates changes (pressure drop) in the set secondary pressure in regard to the changes (air flow) in the amount of air consumed on the secondary side.

When the primary side is 0.7 MPa and the secondary pressure is set with an air flow of "0", the secondary pressure fluctuation and limit flow for a specified air flow can be confirmed.

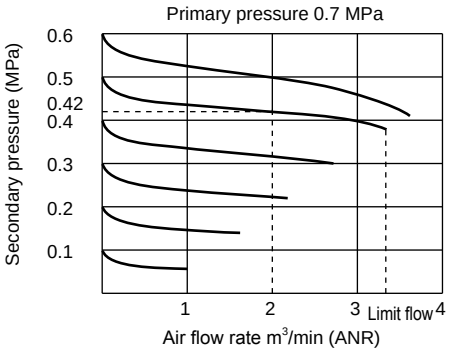

1) Finding the pressure fluctuation

If secondary pressure is 0.5 MPa and air flow is 2 m^3/min, secondary pressure is 0.42 MPa.

Using the flow characteristics table, draw a perpendicular line at an air flow of 2 m^3/min. Then draw a horizontal line along the 0.5 MPa flow curve and read off the secondary pressure where the lines intersect.

2) Finding the limit flow rate

Straight down from the right end of the flow curve at an air flow of 3.6 m^3/min. is the limit flow rate.

Notes

1) The actuator's working flow rate should be within 0.1 MPa of the regulator pressure drop.
2) The limit flow greatly changes depending on the pipe's effective section area (piping inner diameter, pipe length, etc.). Graphs in the catalog are all measured using steel pipe according to JIS B8372-1.
3) Keep differential pressure between primary and secondary sides to 0.1 MPa or more during use.

2. Approximate characteristics when primary side pressures of combination, filter regulator, and regulator flow characteristics differ from the catalog value (primary side pressure 0.7 MPa)

Using the catalog flow characteristics table (primary pressure 0.7 MPa) and a flow curve in which the pressure difference of primary and secondary set pressure is the same, variations in the secondary pressure for the required primary pressure are estimated.

Example) Flow rate properties for which the primary pressure is 0.5 MPa, use 0.4, 0.3, 0.2, and 0.1 MPa flow curves for the secondary pressure catalog values (primary pressure of 0.7 MPa) of 0.6, 0.5, 0.4, and 0.3 MPa, respectively.

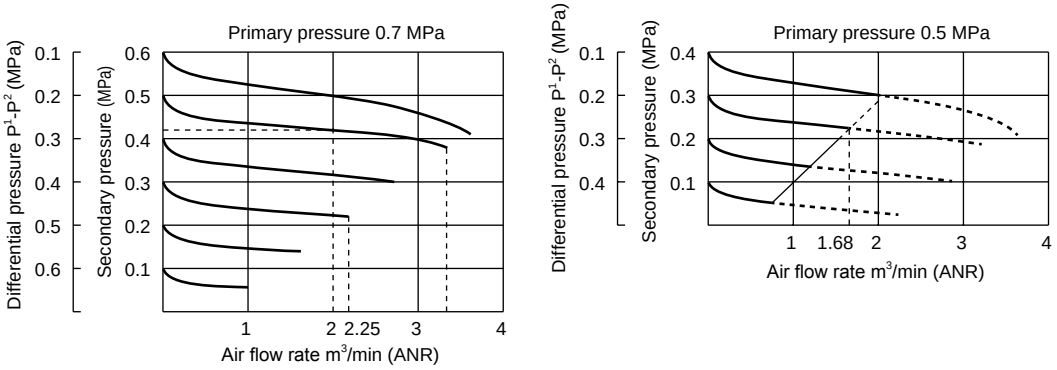

The limit flow rate varies with the absolute pressure ratio of the primary pressure. An approximate value is calculated using the following formula:

$$Q = Qo \times \frac{P1+0.1}{0.8}$$

Qo = Each secondary pressure limit flow rate for the catalog primary pressure of 0.7 MPa

Q = Approximate limit flow rate m^3/min

$P1$ = Required primary side pressure MPa

Example) The approximate limit flow rate at the primary side pressure 0.5 MPa and secondary side pressure 0.3 MPa is:

$$Q = 2.25 \times \frac{0.5+0.1}{0.8} = 1.68(m^3/min)$$

Qo can be obtained by reading the limit flow rate at the secondary side pressure 0.3 MPa in the catalog.

3. Air filter flow characteristics

The flow characteristics table indicates the pressure drop (pressure loss on primary and secondary sides of the air filter) at the air filter for air consumed (air flow) on the secondary side.

The pressure drop is shown for air flow for 0.1, 0.3, 0.5, or 0.7 MPa primary pressure.

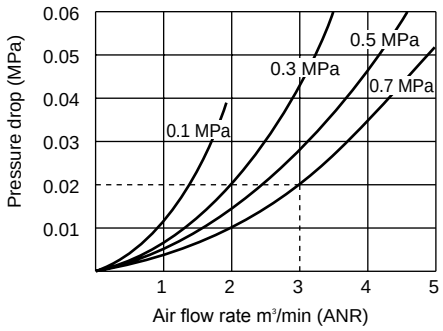

Example) If air flow is 3.0 m^3/min at primary pressure of 0.7 MPa, pressure drops 0.02 MPa (secondary pressure is 0.68 MPa).

Read the pressure drop by drawing a vertical line from air flow 3.0 m^3/min and drawing a horizontal line where it intersects the primary pressure 0.7 MPa curve.

4. Oil mist filter and Y element air filter flow characteristics

Flow characteristics indicate the max. air consumption (air flow rate) corresponding to the primary side working pressure that allows oil and tar removal. If the product is used at an air flow higher than that indicated, oil and tar within the specified value will not be removed.

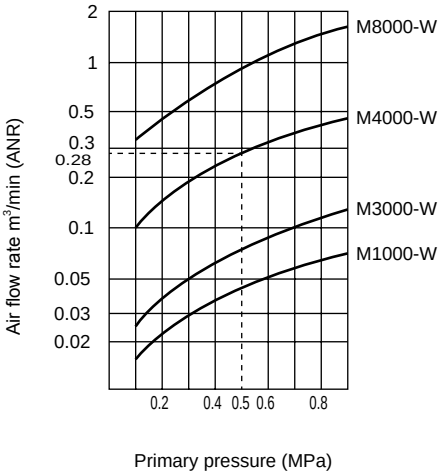

Example) When using the M4000-W with a primary pressure of 0.5 MPa, max. air flow is 0.28 m^3/min.

Read max. air flow by drawing a vertical line from primary pressure 0.5 MPa, and drawing a horizontal line where it crosses the working product curve.

5. Regulator pressure characteristics

The pressure characteristics table shows changes in secondary set pressure for changes in primary pressure.

Primary pressure is, for example, set to 0.7 MPa, secondary set pressure to 0.2 MPa, and air consumption to 25 ℓ/min (atmosphere release thanks to use of ø1 orifice). Changes in secondary set pressure when primary pressure drops to 0.25 MPa, rises to 0.9 MPa, then returns to the original 0.7 MPa are shown.

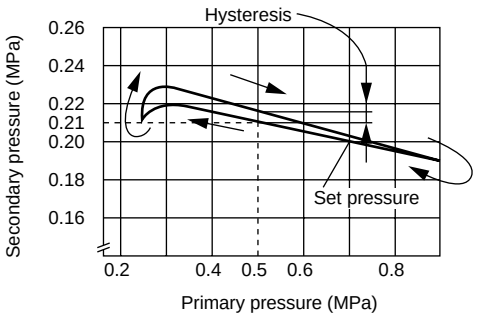

Example) Secondary set pressure rises to 0.21 MPa when primary pressure changes to 0.5 MPa.

Read secondary pressure by drawing a vertical line from primary pressure 0.5 MPa and drawing a horizontal line where it intersects the pressure characteristics curve.

Hysteresis causes pressure difference when the primary pressure rises and falls.

Reading the Properties Table

6. Set pressure range for reverse regulator back pressure

The properties table indicates the limit of secondary back pressure (secondary rise in pressure) enabling reversal (exhaust of regulator secondary pressure to the primary side) of the secondary set pressure.

Example) This indicates that reversal is possible if secondary back pressure is 0.5 MPa or less when set pressure is 0.2 MPa.
Read secondary back pressure by drawing a vertical line from set pressure 0.2 MPa and drawing a horizontal line where it intersects the curve.
The area below the curve is reversible.

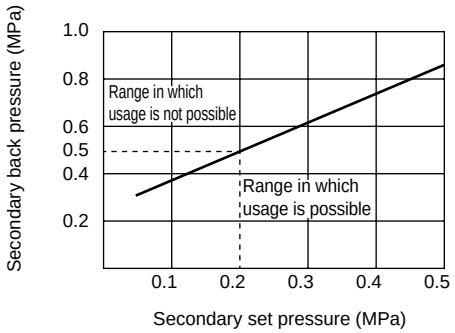

7. Lubricator flow characteristics

The flow characteristics table shows the pressure drop (primary and secondary pressure difference) at each primary pressure of the air flow.

Example) If air flow is 3 m^3/min at primary pressure of 0.7 MPa, pressure drops 0.027 MPa (secondary pressure is 0.673 MPa).
Read the pressure drop by drawing a vertical line from air flow 3.0 m^3/min and drawing a horizontal line where it intersects the primary pressure 0.7 MPa curve.

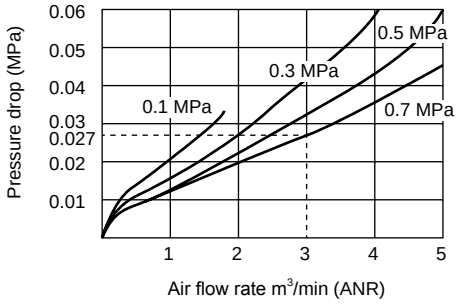

8. Exhaust cleaner flow characteristics

The flow characteristics table indicates back pressure applied to the IN side of the exhaust cleaner for the processing flow rate. If the product is used with a processing flow rate higher than that indicated, silencing and oil mist collection within the specified value will not be attained.

Example) When processing flow rate is 3 m^3/min, 0.039 MPa back pressure is generated at the exhaust cleaner IN side.
Read back pressure by drawing a vertical line from flow 2 m^3/min and drawing a horizontal line where it intersects the curve.

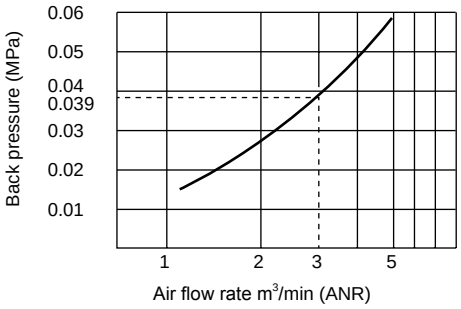

Modular design

F.R.L.

■ F.R.L units



Overview

The F.R.L. module unit is a standard series in which the major boundary dimensions (width/ depth) are compactly designed and unified for filter (F), regulator (R), and lubricator (L), etc., seeking ultimate performance in functionality, operation, maintainability, safety, etc.

Features

(1) Standard modular design
Compact modular design whose major boundary dimensions such as filters, regulators, lubricators, etc., are unified.

(2) Hybrid materials
Aluminum body and resin cover. Lightweight and also durable.

(3) Supplying various clean air
Supplying clean air and oil-free air, etc., according to applications/purposes.

(4) Various combinations can be made
Enables combinations suited to the application.

(5) Long service life element
Clogging is dramatically eliminated thanks to original chemical fiber structure.

(6) Embedded pressure gauge for space saving
Simple front surface design.

CONTENTS

Product introduction	24
Series variation	4 to 19

Modular design (F.R.L.)

● Standard Series	33
● Flame-resistant Series (-G4)	251
● Oil-prohibited Series (RN)	287
● Medium pressure Series (RM)	295
● Copper and PTFE free Series (-P6)	311
● Outdoor Series	321
Customized combination specifications sheet	82
⚠Safety precautions	354

Enhanced Systems Using Full-Scale Modules

Systems are easily upgraded using unified key boundary dimensions and a diverse range of options and variations.

F.R.L. combination

"C*000-W"
Consists of air filter, regulator and lubricator.

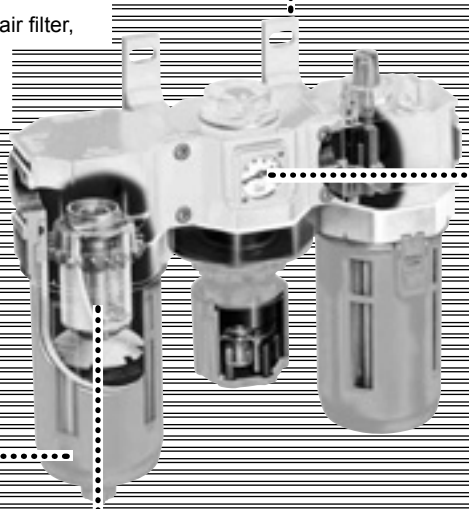

■ Lubricator
"L*000-W"
Supplies oil mist to pneumatic lines.

■ Air filter
"F*000-W"
Effectively removes dust and water droplets.

■ Regulator
Standard "R*000-W"
Reverse "R*100-W"
Lowers supply pressure to maintain stable set pressure.

Element

For air filter F*000-W and filter regulator W*000-W/W*100-W



■ Standard (5 μm) element "Blank"
This long-life element filters out harmful dirt and foreign matter, etc., from air.



■ Submicron (0.3 μm) element "Y" option
This dedicated element effectively separates tar and carbon. (Non-regenerable)

Bowl, bowl guard and drainage

For air filter F*000-W, oil mist filter M*000-W, filter regulator W*000-W/W*100-W

* A bowl guard is installed on the plastic bowl as standard.

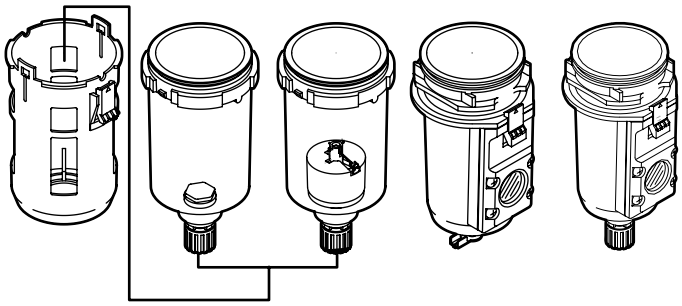

▲ Plastic bowl and bowl guard

▲ Metal bowl

		Bowl			
		Polycarbonate bowl	Nylon bowl	Metal bowl	Metal bowl, man drain cock
Drain discharge	Manual drain cock	Blank (standard)	Z	M	M1
	Auto-drain manual override NO	F	FZ	FM*	FM1
	Auto-drain manual override NC	F1	F1Z	F1M*	F1M1

Refer to page 361 for details on bowl chemical resistance.
A metal bowl is not available for the 1000 Series.
The asterisk (*) indicates the metal manual cock with an Rc1/4 port.

Mounting bracket

Page 346

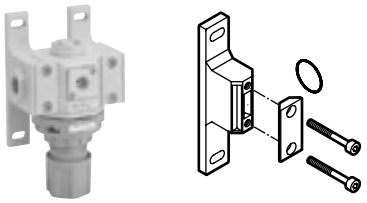

■ T type bracket "B*10-W"
This bracket has two holes on the top and bottom to fix the device to a wall along with upgraded devices.
The 3000-W Series and 4000-W Series can also be connected using B410-W.

Pressure gauge

Page 363



■ Standard integral pressure gauge "G401-W"
Pressure gauge protrusion is reduced.

Filter/regulator



Standard "W*000-W" (page 90)
reverse "W*100-W" (page 98)
The air filter and regulator are integrated to simplify the space-saving assembly.

Oil mist filter

Page 116



"M*000-W" "MX000-W"
Effectively removes oil and oil mist from pneumatic lines.

Residual pressure exhaust valve

Pages 182 to 187



"V*000-W"
The pneumatic line is cut off and residual pressure is released.
For maintenance. Prevents accidents due to residual pressure.
V3010-W with keyhole is also available.

* Indicates model No. 1/2/3/4/6/8.
Drawings are simplified here. Refer to individual pages for details.

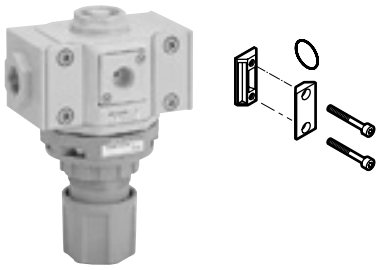

■ Joiner “C*000-J*00-W”
Use this as a fitting when upgrading the system. The 2000-W Series, 3000-W Series and 4000-W Series can also be connected using J400-W.

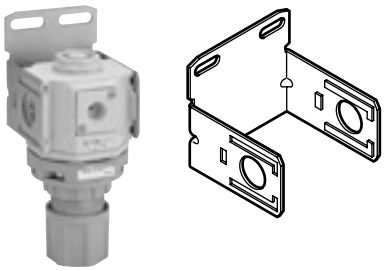

■ C type bracket “B*20”
This bracket fixes single units by simply snapping them in.

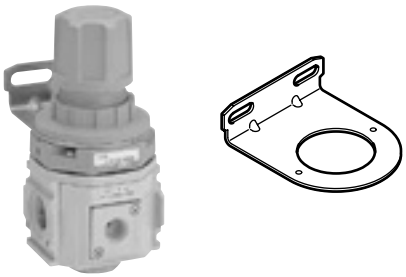

■ L type bracket “B*30”
This bracket fixes parts using the panel mounting nut on the filter regulator or regulator.

For regulator R*000-W/R*100-W and filter regulator W*000-W/W*100-W

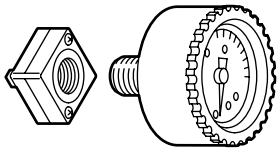

■ Pressure gauge with safety marker “G*OD”
The pressure’s actual usage range is displayed with red and green zones making visual control easier.
* This gauge is assembled with the gauge plug.

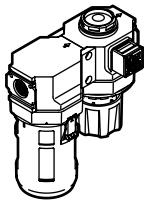

■ Pressure switch with digital display “PPD”
A single unit serves as a pressure detector and indicator, ON/OFF switch, and switch external output.
* Assembly is optional. Option “R1”

Distributor Page 348

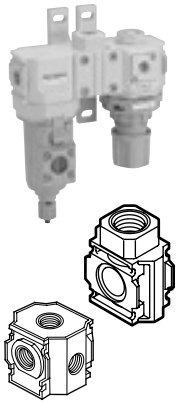

■ One-way branch “D*01-W”
This distributor, which is installed facing either upward or downward, branches pneumatic pressure piping with a large effective sectional area.
■ 4-way branch “D300-W”
The pipe branches in four directions.
* For 3000-W/4000-W Series.

Pipe adaptor Page 350



Straight

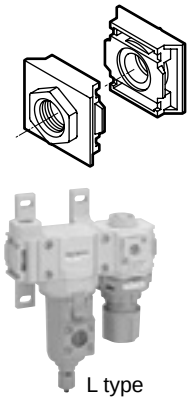

L type

■ Straight “A*00-W”
By using an adaptor, single units can be removed separately for maintenance instead of removing the piping.
The adaptor is convenient for changing the connection port size of single units.
■ L type “A*01-W”
The device’s IN and OUT ports are turned by 90° and piped from top or bottom.
* Contact CKD regarding the vertical piping.

Bowl/bowl guard — For lubricator L*000-W

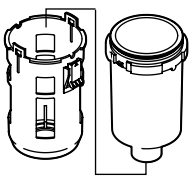

■ Plastic bowl and bowl guard
Material: Polycarbonate - “blank”, standard - Nylon “Z” option
* Manual drain cock is “C” option.
* A bowl guard is installed on the plastic bowl as standard.

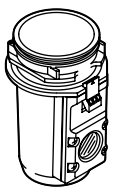

■ Metal bowl
Use the metal bowl in an atmosphere where plastic bowls cannot be used.
Material: Aluminum “M” option
* A metal bowl is not available for the 1000-W Series.

Pressure switch Pages 166 to 178 and 1150

Pneumatic line pressure is repeatedly and accurately checked.



“P4000-W”



“PPR”



“P*100-W”



“PPX”

Contact CKD regarding other system upgrades.

Element replacement timing is important

The things you risk by not replacing the element at the proper timing...

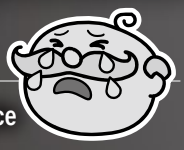



Machining accuracy decrease



Oil contamination

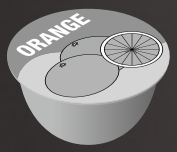

Failure/shortened service life of secondary side devices

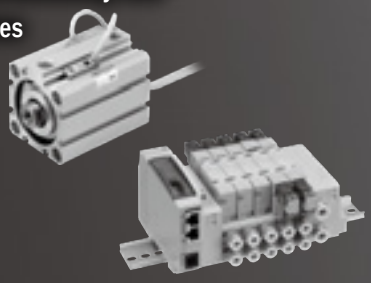

Before this happens, conduct "air predictive maintenance" with a switch and indicator double-check.



Realizing high accuracy predictive maintenance

1 Industry's first* 2-point switch output

The replacement time of the filter is reported in stages, so a higher level of handling and maintenance is possible.



Replacement recommended　　Replacement required

It is even possible to confirm the condition of parts of the filter that cannot be seen, enabling remote observation, and it can be installed in the device as well.
Maintain high precision resistant to failure by providing a fluid passage section to the switch.

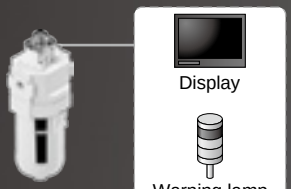

2 An indicator that can confirm intuitively

A clear cover and a colorful lamp enables high visibility.
A mark that helps you know when it is time to replace the filter is formed on the clear cover, making handling and maintenance easier.

* As of October 2018, CKD research.

Switch selection available

Choose from 3 types according to application



No switch (differential pressure indicator only)



Differential pressure indicator + SW2



Differential pressure indicator + SW1/SW2

in system maintenance.

Use visual inspection and the 2 switches to know the timing of element replacement

Operation image

Filter clogging	Indicator (color)	Switch output
Initial (No clogging) 	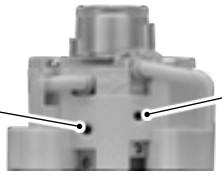	Caution lamp (SW1): OFF Warning lamp (SW2): OFF
Replacement recommended 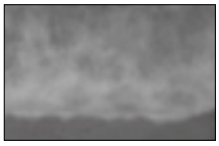	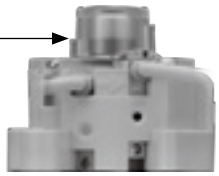	Caution lamp (SW1): **ON** Warning lamp (SW2): OFF
Replacement required 	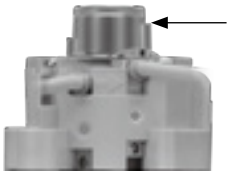	Caution lamp (SW1): **ON** Warning lamp (SW2): **ON**

Usage examples

Laser finishing machine

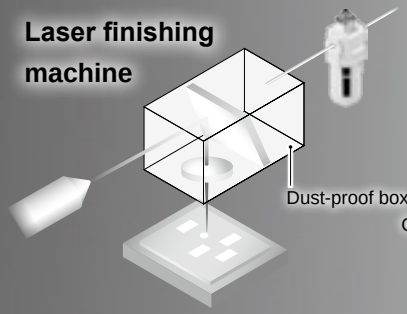

Machine tools

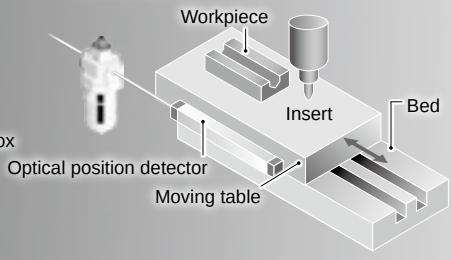

Food processing

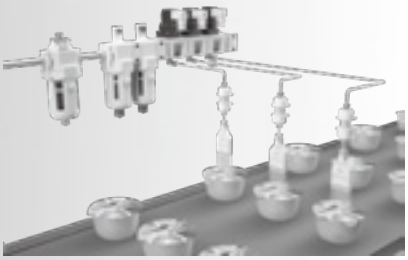

One-Point Predictive Maintenance

Generally speaking, the filter element should be replaced about once a year. This is just a guideline. The amount of oil mist flowing to the secondary side differs according to working conditions.
To keep your system at optimal conditions, replacement needs to be carried out at the appropriate period.

We recommend that you replace your filter elements regularly!



Oil mist filter

M 2000/3000/ 4000/6000 series

It's a NEW CONCEPT

Pursuing high performance in all aspects: functionality, operability, serviceability and safety.

(Compressed air filter, regulator, lubricator and other components)

FUNCTIONAL FEATURES

● Compacting/modularization

Main dimensions (width and depth) of F.R.L products have been standardized as compact module. Accurate assembly dimensions are obtained with simple calculations.

COMPACT MODULE

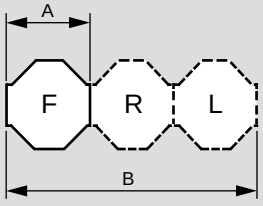

Unit: mm

	C1000-W	C2000-W	C2500-W	C3000-W	C4000-W	C6500-W	C8000-W
A	40	50 50 63	63 50 63	63	80	90 90 100	100
B	40×3	50×2+63	63×2+50	63×3	80×3	90×2+100	100×3

● Lightweight (1/2 (CKD comparison))

The hybrid material (body: aluminum die-cast, cover: resin) provides strength, and reduces weight by 50% compared to the conventional type. (C4000 comparison)

LIGHT WEIGHT

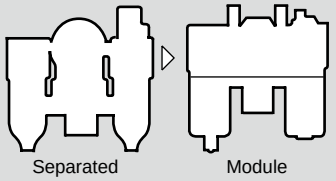

Unit: kg

	C1000-W	C2000-W	C2500-W	C3000-W	C4000-W	C6500-W	C8000-W
Module	0.4	1.01	1.01	1.15	1.79	3.64	4.5
Conventional prods	0.7	-	1.8	1.8	3.4	7.2	7.2

● Long service life element

This element incorporates CKD's original chemical fiber structure (patent pending), which has a rough surface and gradually becomes finer toward the interior. Clogging is greatly reduced, and the element life is greatly extended. No need to worry about rust.

LONG LIFE FILTER (1)

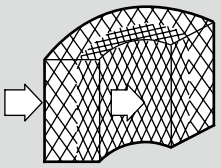

● Embedded pressure gauge for space saving

The conventional protruding pressure gauge wasted space on the front, and caused person(s) to come into contact with it, creating a dangerous situation. A neat design and safety have been realized by embedding the pressure gauge into the body.

FLAT FACE

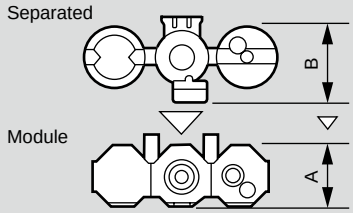

Unit: mm

	C1000-W	C2000-W	C2500-W	C3000-W	C4000-W	C6500-W	C8000-W
Module A	57	62	70.5	63	79	100	100
Conventional prods B	74	-	109	109	124	131	131

● Mechanism to prevent oil dripping during primary side pressure drop

Oil dripping caused by reverse flow when pressure is released with the residual pressure exhaust valve, etc., is suppressed.

● Highly corrosion resistant, safe bowl guard

Very safe and corrosion resistant plastic bowl guard is integrated.

● With gauge plug

The gauge plug is sealed even without a pipe plug. (Refer to page 377 when using the screw-in pressure gauge)

⚠ Always read the precautions in the Introduction and on pages 354 to 361 before use.





OPERATIVE FEATURES

● Pressure adjustment without tool

Pressure can be adjusted with one hand and locking performed with one push. Manual knob operation is easy when setting pressure as well.

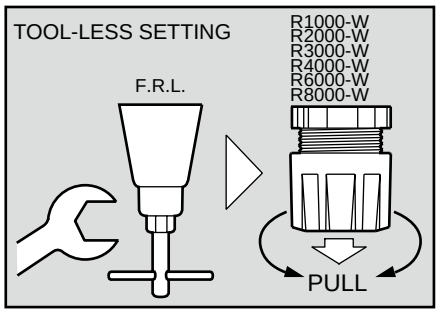

● Easily handles panel mounting as well

When the panel mounting nut is loosened, the nut acts as a jack and enables the knob to be removed easily. Fix with a nut when mounting on a panel. The L type bracket is also installed similarly to the nut.

(When mounting with an L type bracket, the body can be fixed securely without play.) * Excluding 8000-W Series.

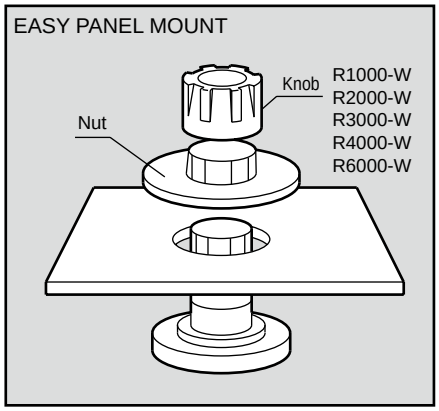

Note: Install the nut before installing the knob. (The nut of R2000-W can be removed without removing the knob.)

● Oil drip adjustment knob with lock

Oil dripping is easily adjusted manually without a tool. A stopper is provided in the opening direction to function as a lock, and increase safety. The numbers on the dial are used as a guide after adjusting the dripping.

* Adjust the oil drip to 0.5 N m or less.

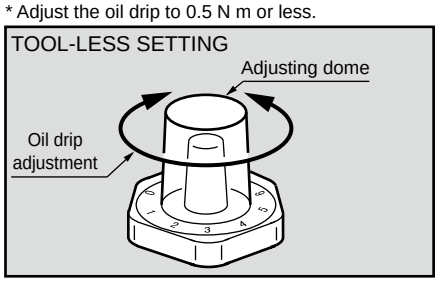

● Double plastic structure

A double plastic structure is adopted, so oil dripping can be confirmed from 360°.

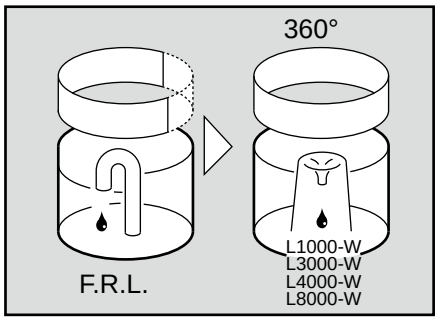

● One-touch integrated attachment/ removal

The bowl and bowl guard are easily attached/ detached together with the quick-release latch. (1000-W Series has no latch)

* Confirm that pressure has been released before mounting or removing the bowl and bowl guard.

● O-ring position locking

An O-ring slot is provided on the bowl side to prevent problems caused if the O-ring falls off during bowl attachment and removal.

The O-ring does not fall off during maintenance, and a safe and accurate sealing is attained.

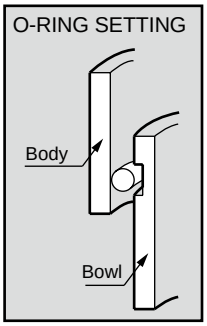

● One-touch integrated filter element

The integrated element is removed by turning the baffle 45° to the left.

(1000-W Series only)

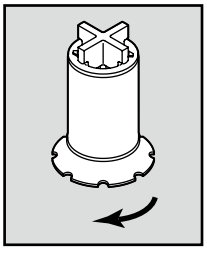

F.R.L. Combination

Option explanation

Combination lists of drain discharge and bowl material of filter (model No. display Item (D))

Compatible series	Bowl material		Manual drain cock	Auto-drain with manual cock		Large auto-drain with manual cock	
				NO	NC	NO	NC
1000-W Series	Plastic bowl	Polycarbonate	○(Blank)	×	○(Code: F1)	×	×
		Nylon	○(Code: Z)	×	○(Code: F1Z)	×	×
	Metal bowl	Aluminum	×	×	×	×	×
2*00-W Series 3000-W Series 4000-W Series 6000-W Series	Plastic bowl	Polycarbonate	○(Blank)	○(Code: F)	○(Code: F1)	×	×
		Nylon	○(Code: Z)	○(Code: FZ)	○(Code: F1Z)	×	×
	Metal bowl	Aluminum	○(Code: M/M1)	○ (Code: FM/FM1)	○(Code: F1M/F1M1)	×	×
8000-W Series	Plastic bowl	Polycarbonate	○(Blank)	○(Code: F)	○(Code: F1)	○(Code: FF)	○(Code: FF1)
		Nylon	○(Code: Z)	○(Code: FZ)	○(Code: F1Z)	○(Code: FFZ)	○(Code: FF1Z)
	Metal bowl	Aluminum	○(Code: M/M1)	○ (Code: FM/FM1)	○(Code: F1M/F1M1)	○(Code: FFM/FFM1)	○ (Code: FF1M/FF1M1)
Features			-	At night, etc., when there is no pressurization, the valve opens and drainage is discharged automatically.	Air is not purged during initial pressurization.	Hi-Discharge perform, auto-drain discharged when unit has no press.	Discharge performance is high and air is not purged during initial pressurization.

Combination lists of drain discharge and bowl material of lubricator (model No. display Item (D))

Compatible series	Bowl material		Without manual cock	With manual cock
1000-W Series	Plastic bowl	Polycarbonate	○(Blank)	○(Code: C)
		Nylon	○(Code: Z)	○(Code: CZ)
	Metal bowl	Aluminum	×	×
2000-W Series 2500-W Series 3000-W Series 4000-W Series 6000-W Series 8000-W Series	Plastic bowl	Polycarbonate	○(Blank)	○(Code: C)
		Nylon	○(Code: Z)	○(Code: CZ)
	Metal bowl	Aluminum	○(Code: M)	○(Code: CM/CM1)

Option and explanation of code with pressure range, relief pressure, pressure gauge, flow direction (model No. display Item (D))

Option code: L



· Pressure display: 0 to 0.4 MPa
· Pressure range: 0 to 0.35 MPa
· Pressure gauge: G401-W-P04

Option code: N

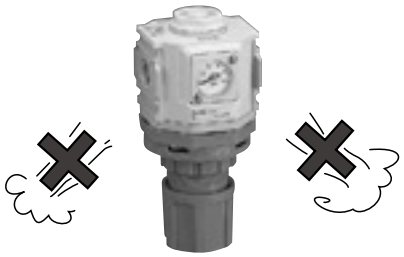

· Air is not discharged.

Option code: T



· Without pressure gauge
· The Rc1/4 gauge port is sealed when the plug is mounted.
· Refer to page 377 when mounting a pressure gauge.

Option code: T8/T6



· A round pressure gauge is included. A pressure gauge is not included.
· Pressure gauge mounting port is open.
· Refer to page 377 when mounting a pressure gauge.

Option code: RN/RP/R2 (Note)

RN/RP



R2



· When pressure switch with display PPR is mounted
· When digital pressure sensor PPX is included
(Refer to page 1150 for details.)

Option code: X1

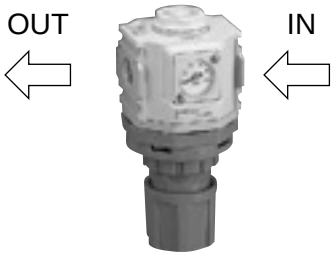

• The pressure gauge faces forward, with IN on the right side.

(Note) Option code "RN/RP" is not used for the C*000-W Series or C*010-W Series.

Operational explanation of float type auto-drain

● NO (F, FF)
3000-W/4000-W/6000-W/8000-W Series

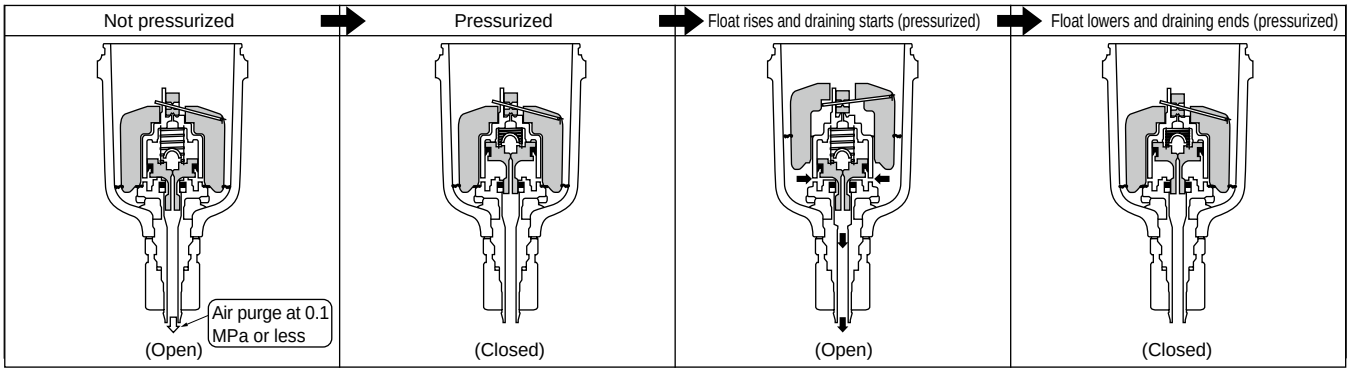

● NC (F1, FF1)
3000-W/4000-W/6000-W/8000-W Series

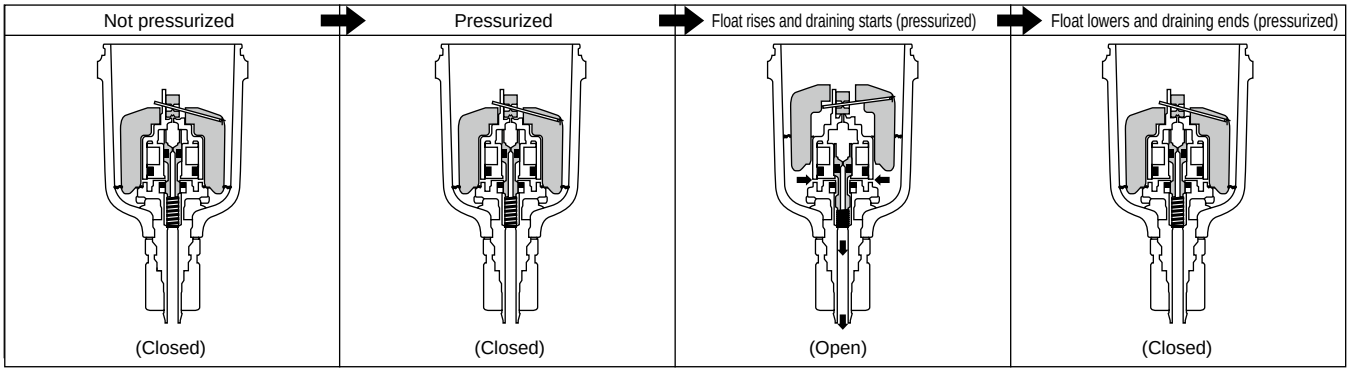

● NC (F1)
1000-W Series

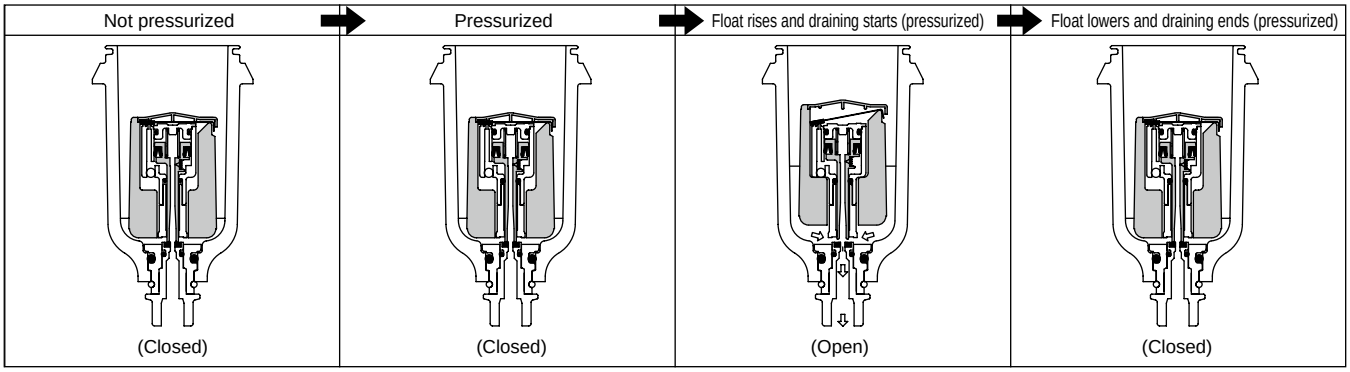

● NC (F1)
2000-W Series

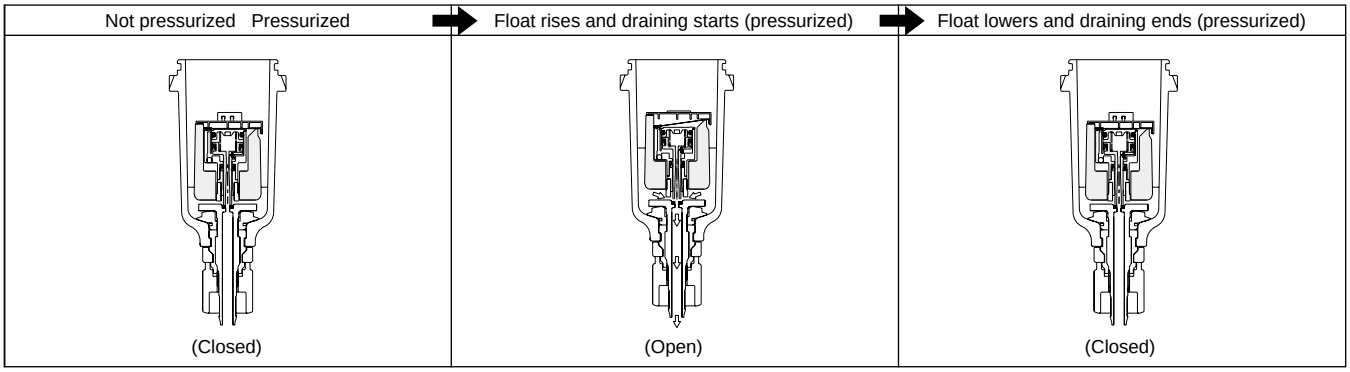

	Operation		Features	Cautions
	Not pressurized (e.g., at night)	Pressurized		
NO	Drain discharge is opened and drainage is discharged naturally.	Drain discharged with drainage discharge section air until press ≥min. working press. After filling, drain discharge section is closed.	Drainage is discharged naturally when not pressurized (at night, etc.), so manual discharge is not required. In the pressurized state, once pressure is attained, drainage is automatically discharged when it accumulates at a set level.	As indicated in Features, air and drainage are temporarily discharged until reaching the min. working pressure, so pressure may not be sufficient with a compressor (0.75 kW or less) having a small discharge flow. Use the NC in this case.
NC	The drain discharge section is closed.		Suitable for small discharge compressor (0.75 kW or less). No temporary air purging during pressurization. Once press is maintained, drainage at set level is automatic.	Drainage is not discharged without pressurization (nighttime, etc.), so manual discharge is required in applications where large amounts of drainage are generated in this state.

Modular design

Standard Series

■ F.R.L units

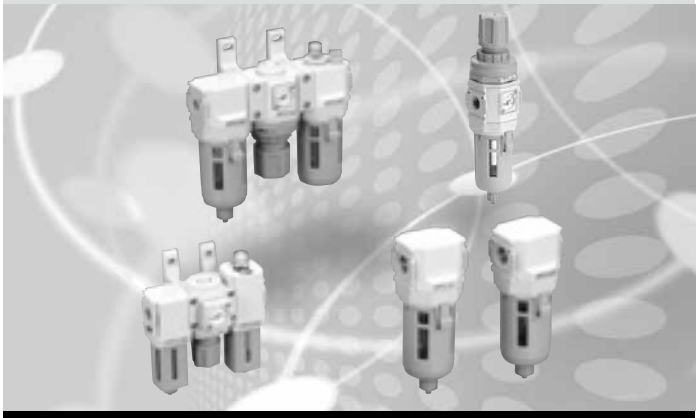

CONTENTS

Product introduction 24
Series variation 4 to 19
Product explanation 28

Combination

● F.R.L combination (C*000-W) 34
● W.L combination (C*010-W) 42
● F.R combination (C*020-W) 48
● F.M.R combination (C*030-W) 54
● W.M combination (C*040-W) 60
● R.M combination (C*050-W) 66
● F.M combination (C*060-W) 72
● F.F.M combination (C*070-W) 78

Filter/regulator

● Filter/regulator (W*000-W) 90
● Reverse filter/regulator (W*100-W) 98

Air filter

● Air filter (F*000-W) 106
● Oil mist filter (M*000-W) 116
● High-performance oil mist filter (MX*000-W) 128
● Air filter medium pressure (FM*000-W) 296
● Oil mist filter medium pressure (MM*000-W) 302

Regulator

● Regulator (R*000-W) 136
● Reverse regulator (R*100-W) 144
● Regulator medium pressure (RM*000-W) 308

Lubricator

● Lubricator (L*000-W) 152

Mechanical pressure switch

● Mechanical pressure switch (P4000-W) 166
● Compact mechanical reed pressure switch (P*100-W) 168
● Mechanical pressure switch (APE) 172
● Mechanical pressure switch (APS-W) 176

Residual pressure exhaust valve

● Residual pressure exhaust valve (V1000-W/V3000-W) 182
● Residual pressure exhaust valve with keyhole (V3010-W/V6010-W) 185

Slow start valve

● Slow start valve (V3301-W/V3321-W) 214

Bracket/joiner (B/J) 346
Distributor (D*01-00-W) 348
Pipe adaptor (A***-W) 350
⚠ Safety precautions 354

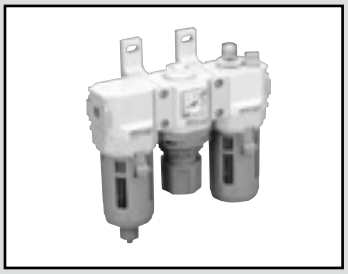

F.R.L. combination Standard White Series

C1000/C2000/C2500-W C3000/C4000/C6500/C8000-W Series

Space-saving with integrated filter, regulator and lubricator

● Port size: 1/8 to 1

JIS symbol 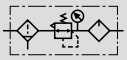

RoHS CAD

Specifications

1 MPa ≈ 145.0 psi, 1 MPa = 10 bar

Item		C1000-W	C2000-W	C2500-W	C3000-W	C4000-W	C6500-W	C8000-W
Appearance								
Components	Air filter	F1000-W	F2000-W	F3000-W	F3000-W	F4000-W	F6000-W	F8000-W
	Regulator	R1000-W	R2000-W	R2000-W	R3000-W	R4000-W	R6000-W	R8000-W
	Lubricator	L1000-W	L3000-W	L3000-W	L3000-W	L4000-W	L8000-W	L8000-W
Working fluid		Compressed air						
Max. working pressure MPa		1.0 (≈150 psi, 10 bar) *2						
Proof pressure MPa		1.5 (≈220 psi, 15 bar)						
Ambient / fluid temperatures °C		5 (41°F) to 60 (140°F)						
Filtration rating μm		5						
Set pressure MPa		0.05 to 0.85 *2	0.05 (≈7.3 psi, 0.5 bar) to 0.85 (≈120 psi, 8.5 bar)					
Min. drip flow rate (*1) m^3/min(ANR)		0.015	0.03	0.03	0.03	0.065	0.065	0.065
Pressure relief		With relief mechanism						
Oil storage capacity cm^3		20	85	85	85	170	170	170(MAX 360)
Drain capacity cm^3		12	25	45	45	80	80	80 (*3)
Oil used		Turbine oil Class 1 ISO VG32 (spindle oil cannot be used)						
Port size Rc,NPT,G		1/8,1/4 (3/8 uses an adaptor)	1/4,3/8 (1/2 uses an adaptor)	1/4,3/8 (1/2 uses an adaptor)	1/4,3/8 (1/2 uses an adaptor)	1/4,3/8,1/2 (3/4 uses an adaptor)	3/4,1 (1 1/4 uses an adaptor)	3/4,1 (1 1/4 uses an adaptor)
Weight kg		0.40	1.01	1.01	1.15	1.79	3.64	4.5
Standard accessories		Pressure gauge, bracket, bowl guard						

*1: The min. drip flow is that at which five drops of turbine oil drip per minute at the set pressure of 0.5 MPa.

*2: When using the C1000-W Series "F1" with auto-drain, the min. working pressure is 0.2 MPa and max. working pressure is 0.7 MPa. Refer to the max. working flow rate table (page 106) for F1000-W-F1 auto-drain for the max. working flow rate. Set the working flow rate to less than or equal to the max. working flow rate.

*3: Up to 170 cm^3 is stored with the manual drain cock only.

*4: In the case of "F" or "FF" with auto-drain, the min. working pressure of auto-drain is 0.1 MPa. Air is purged with initial drain until pressure reaches 0.1 MPa.

*5: In the case of "F1" or "FF1" with auto-drain, the min. working pressure of auto-drain is 0.15 MPa.

*6: When element option "Y" is selected, refer to the max. working flow rate table (page 108) for the max. flow rate. Set the working flow rate to less than or equal to the max. working flow rate.

*7: C2000-W Series with "F1" (with auto-drain) must be used at equal to or less than the max. working flow rate. (Refer to the F2000-W section on page 106 for max. flow rate.)

Option weight

* Add to the weight of the standard accessories.

Unit: kg

Code	Drain discharge					Bowl material		Press.gauge	Pipe adaptor set						
	F	F1	FF	FF1	C	M	M1	T*	A6*W	A8*W	A10*W	A15*W	A20*W	A25*W	A32*W
C1000		0.007			0			0	0.09	0.09	0.09				
C2000		0.02			0		0.2	0		0.16	0.16	0.16			
C2500		0.02			0	0.2	0.2	0		0.16	0.16	0.16			
C3000	0.02	0.02			0	0.2	0.2	0		0.16	0.16	0.16			
C4000	0.02	0.02			0	0.2	0.2	0		0.16	0.16	0.16	0.16		
C6500	0.02	0.02			0	0.2	0.2	0					0.53	0.53	0.53
C8000	0.02	0.02	0.02	0.02	0	0.2	0.2	0					0.53	0.53	0.53

Code	Assembled components					Pressure gauge					
	D	S	P	V	K	G45P	G49P	G59P	G40P	G52P	R2
C1000	0.056	0.15		0.18		0.074	0.086	0.115	0.085	0.15	0.04
C2000	0.17	0.23	0.54	0.29	0.34	0.074	0.086		0.085	0.15	0.04
C2500	0.17	0.23	0.54	0.29	0.34	0.074	0.086	0.115	0.085	0.15	0.04
C3000	0.17	0.23	0.54	0.29	0.34	0.074	0.086	0.115	0.085	0.15	0.04
C4000	0.17	0.23	0.54	0.29	0.34	0.074	0.086	0.115	0.085	0.15	0.04
C6500	0.45	0.51			0.9	0.074	0.086	0.115	0.085	0.15	0.04
C8000	0.45	0.51			0.9	0.074	0.086	0.115	0.085	0.15	0.04

F.R.L. Combination

How to order

Refer to page 30 for the explanation of the option.

C1000 – 6 ( ) – W – C – U DSV – ( ) – A6W ( ) ( )

Ⓐ Model No. *2
Ⓑ Port size
Ⓒ Port thread
Ⓓ Option
Ⓔ Assembled components
Ⓕ Display unit *11
Ⓖ Pipe adaptor set (included)
Ⓗ Attachment
Ⓘ Pressure gauge option (included)

Code	Description	Ⓐ Model No. *1 C1000	C2000	C2500	C3000	C4000	C6500	C8000
Ⓑ Port size								
6	1/8	●						
8	1/4	●	●	●	●	●		
10	3/8		●	●	●	●		
15	1/2					●		
20	3/4					● *1	●	●
25	1						●	●
Ⓒ Port thread								*2
Blank	Rc thread	●	●	●	●	●	●	●
N	NPT thread	●	●	●	●	●	●	●
G	G thread	●	●	●	●	●	●	●
Ⓓ Option								*3
Drain discharge *4 Blank	Filter with manual drain cock, lubricator without manual cock	●	●	●	●	●	●	●
C	Lubricator with manual cock	●	●	●	●	●	●	●
F	Filter/auto-drain with manual override (NO: Exhaust when not pressurized)			●	●	●	●	●
F1	Filter/auto-drain with manual override (NC: No exhaust when not pressurized)	●	●	●	●	●	●	●
FF	Filter/large auto-drain with manual override (NO: Exhaust when not pressurized)							●
FF1	Filter/large auto-drain with manual override (NC: No exhaust when not pressurized)							●
Bowl material Blank	Polycarbonate bowl	●	●	●	●	●	●	●
Z	Nylon bowl	●	●	●	●	●	●	●
M	Metal bowl			●	●	●	●	●
M1	Metal bowl with manual drain cock *5		●	●	●	●	●	●
Element Blank	5 µm	●	●	●	●	●	●	●
Y	0.3 µm (submicron) *6			●	●	●	●	●
Diff press detect Blank	Without differential pressure detection port	●	●	●	●	●	●	●
Q	With differential pressure detection port (Rc1/4)						●	●
Pressure range Blank	0.05 to 0.85 MPa	●	●	●	●	●	●	●
L	0.05 to 0.35 MPa *7	●	●	●	●	●	●	●
Pressure relief Blank	With relief mechanism	●	●	●	●	●	●	●
N	Non-relief	●	●	●	●	●	●	●
Pressure gauge Blank	With standard pressure gauge (G401-W)	●	●	●	●	●	●	●
T	No pressure gauge (gauge port (1/4) is assembled sealed)	●	●	●	●	●	●	●
T8	Pressure gauge ready (gauge port (1/4) is left open)	●	●	●	●	●	●	●
Flow direction Blank	Standard flow (left → right)	●	●	●	●	●	●	●
X1	Reverse flow (right → left)	●	●	●	●	●	●	●
Ⓔ Assembled components								Pages 166 to 171, 182 to 187, 348 and 349
Blank	Without assembled component	●	●	●	●	●	●	●
U	Assembled component *8	●	●	●	●	●	●	●
Assembled component D	Distributor (D101-W, D401-W, D801-W)	●	●	●	●	●	●	●
S	Pressure switch (P1100-W, 4100-W, 8100-W)	●	●	●	●	●	●	●
P	Pressure switch (P4000-W)		●	●	●	●		
V	Residual pressure exhaust valve (V1000-W, 3000-W)	●	●	●	●	●		
K	Residual pressure exhaust valve with keyhole (V3010-W, V6010-W)		●	●	●	●	●	●
Ⓕ Display unit								
Blank	MPa display (Rc thread), psi display (NPT thread), bar display (G thread)	●	●	●	●	●	●	●
J1	MPa display (NPT, G thread)	●	●	●	●	●	●	●
Ⓖ Pipe adaptor set (included)								Page 350 *9
Blank	Not included	●	●	●	●	●	●	●
A6*W	1/8 pipe adaptor set	●						
A8*W	1/4 pipe adaptor set	●	●	●	●	●		
A10*W	3/8 pipe adaptor set	●	●	●	●	●		
A15*W	1/2 pipe adaptor set		●	●	●	●		
A20*W	3/4 pipe adaptor set					●	●	●
A25*W	1 pipe adaptor set						●	●
A32*W	1 1/4 pipe adaptor set						●	●
Adaptor thread								
Blank	Rc thread	●	●	●	●	●	●	●
N	NPT thread	●	●	●	●	●	●	●
G	G thread	●	●	●	●	●	●	●
Ⓗ Other attachments								
Blank	Not included	●	●	●	●	●	●	●
PW	Pressure switch (P4000-W) + joiner set		●	●	●	●		
VW	Residual pressure exhaust valve (V1000-W, V3000-W) + joiner set	●	●	●	●	●		
Ⓘ Pressure gauge option (included)								Page 363 *10
Blank	Not included	●	●	●	●	●	●	●
G45P	G45D-8-P10(L:G45D-8-P04)	●	●	●	●	●	●	●
G49P	G49D-8-P10(L:G49D-8-P04)	●	●	●	●	●	●	●
G59P	G59D-8-P10(L:G59D-8-P04)	●		●	●	●	●	●
G40P	G40D-8-P10(L:G40D-8-P04)	●	●	●	●	●	●	●
G52P	G52D-8-P10(L:G52D-8-P10)	●	●	●	●	●	●	●

⚠ Precautions for model No. selection

1: Pipe adaptor A400-20-W is assembled on both ends of C4000-20*-W. A20*W does not need to be selected for the pipe adaptor set.
*2: G threads and NPT threads are available for IN, OUT, gauge port and drain outlet (metal bowl with auto-drain). Attachments P and V are also included.
*3: Select options for the drainage, bowl material, element, differential pressure detection and regulator. When selecting options for several items, list options in order from the top.
*4: Refer to page 354 for the auto-drain usage conditions.
*5: When selecting option “M1”, select the drain discharge option “C”.
*6: Refer to page 108 for max. processing flow rate when option “Y” is selected.
*7: The pressure gauge’s indication range is 0 to 0.4 MPa for the option “L”.
*8: Installation position for assembled components

Code	Attachment Install positions	Compatible model
D	F+(D)+R+L	C1000-W to C8000-W
S or P	F+R+(S,P)+L	C1000-W to C8000-W (“P” excludes 1000, 6000 and 8000 Series)
V or K	F+R+L+(V,K)	C1000-W to C8000-W (“V” excludes 6000 and 8000 Series and “K” excludes 1000 Series)

Note) Indicate “U”+“D”, “S”,“P”,“V” and “K” when selecting an assembled component.
Use customized combination specifications sheet for any other combination.
*9: The joiner set is enclosed with the pipe adaptor set.
*10: The pressure gauge option (included) can be selected only when Ⓒ Port thread is Rc thread.
*11: Display unit options when selecting NPT threads: If Blank is selected, the pressure unit is psi and the temperature display unit is °F.
When G thread and Blank display unit option are selected, the pressure unit will be bar and the temperature display unit will be °C.
When NPT/G thread and “J1” display unit option are selected, the pressure unit will be MPa and the temperature display unit will be °C.

Flow characteristics

● C1000-6-W

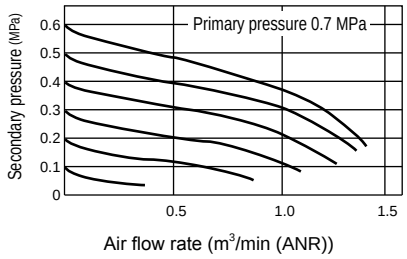

● C1000-8-W

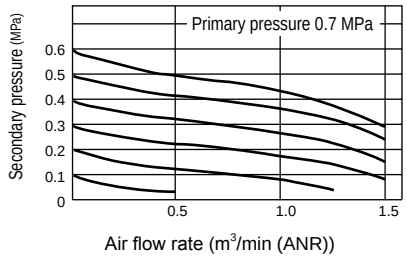

● C2000-8-W

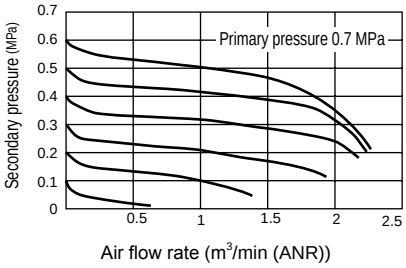

● C2000-10-W

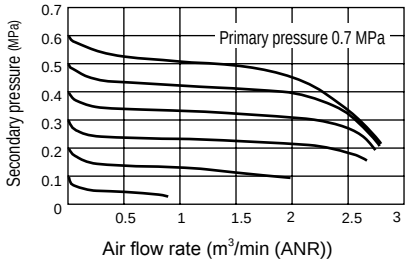

● C2500-8-W

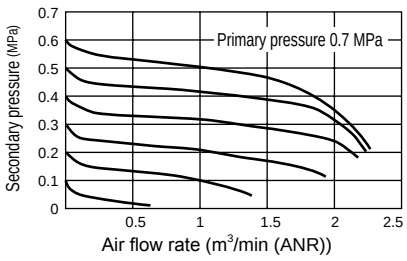

● C2500-10-W

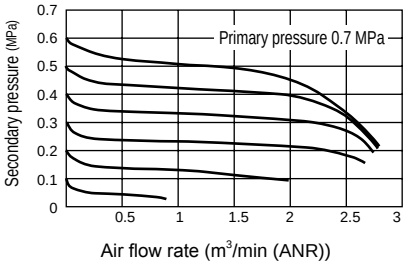

● C3000-8-W

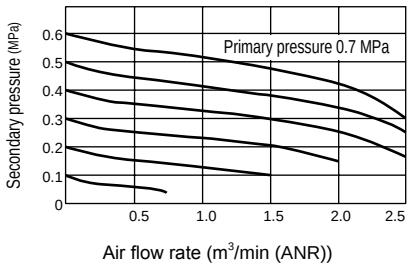

● C3000-10-W

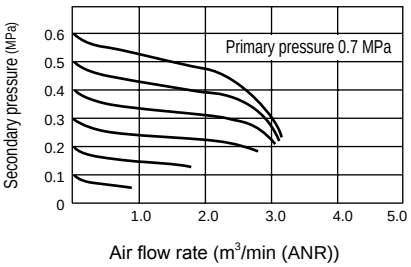

● C4000-8-W

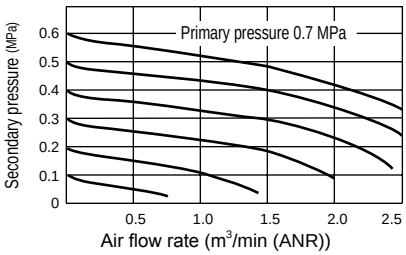

● C4000-10-W

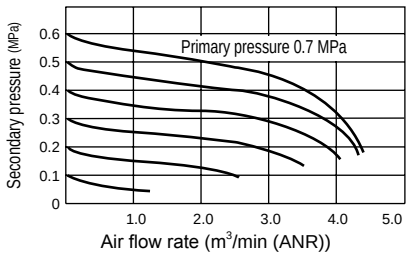

● C4000-15-W

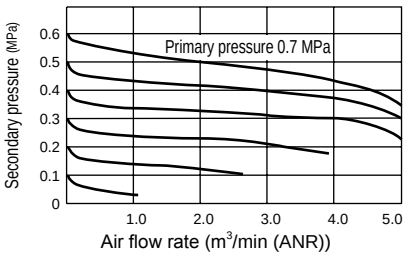

● C6500-20-W

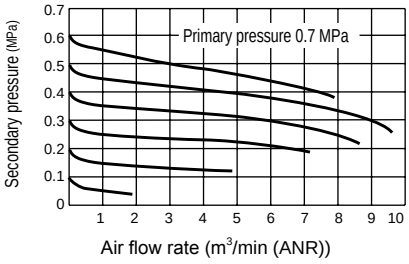

● C6500-25-W

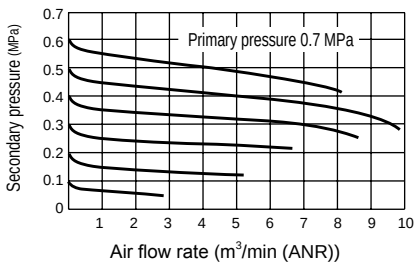

● C8000-20-W

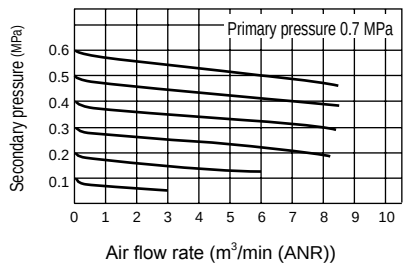

● C8000-25-W

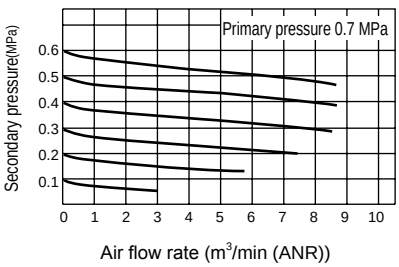

F.R.L. Combination

Dimensions CAD

● C1000-W

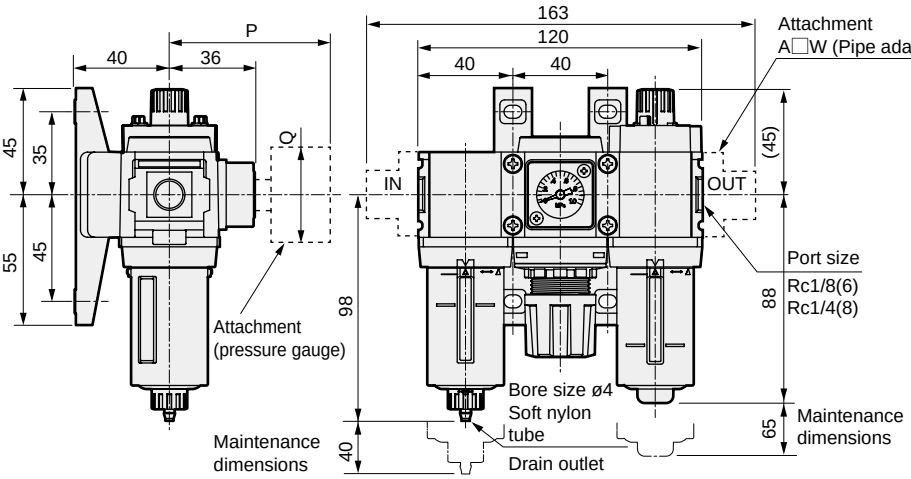

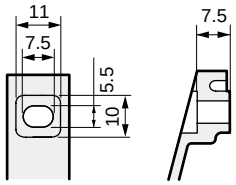

Enlarged view of bracket section

· Dimensions of options
With auto-drain (F1)

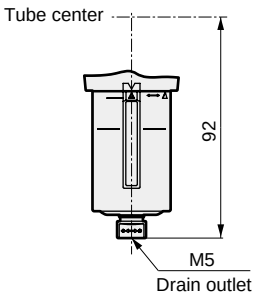

Pressure gauge attached optional dimensions table

Pressure gauge	P	Q
G45P	(74)	ø39
G49P	(73.5)	ø43.5
G59P	(76)	ø52
G40P	(75.5)	ø42.5
G52P	(86)	ø52.5

● C2000-W

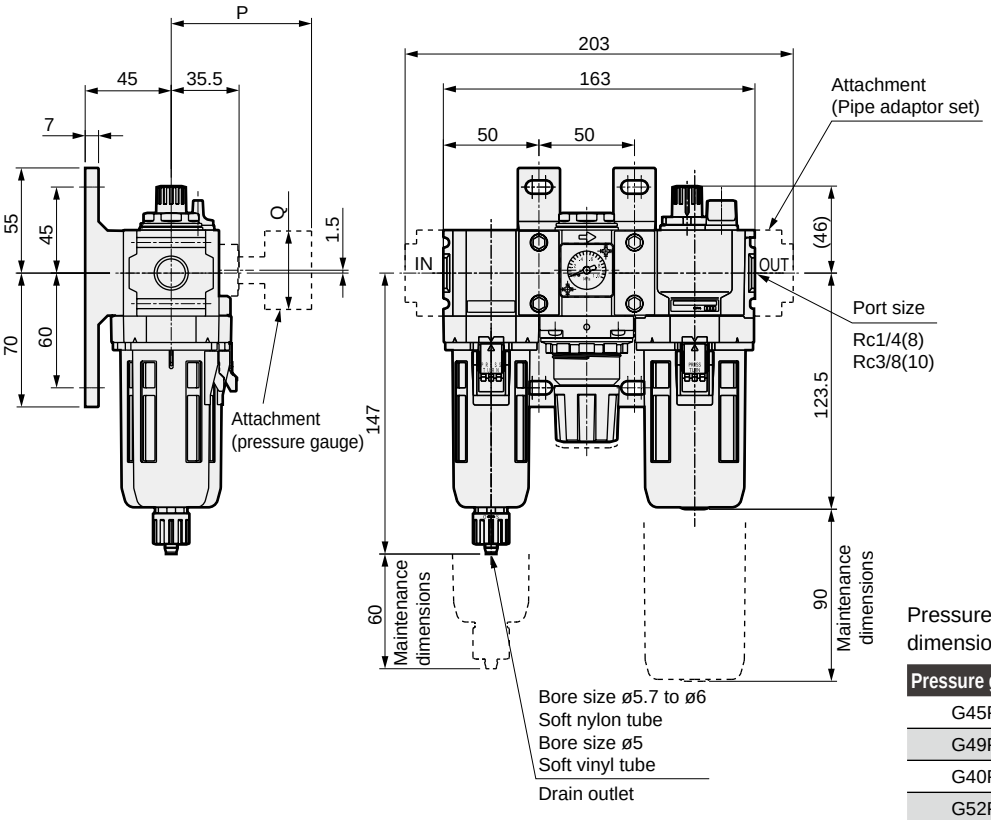

Pressure gauge attached optional dimensions table

Pressure gauge	P	Q
G45P	(73.5)	ø39
G49P	(73)	ø43.5
G40P	(75)	ø42.5
G52P	(85.5)	ø52.5

Dimensions CAD

● C2500-W

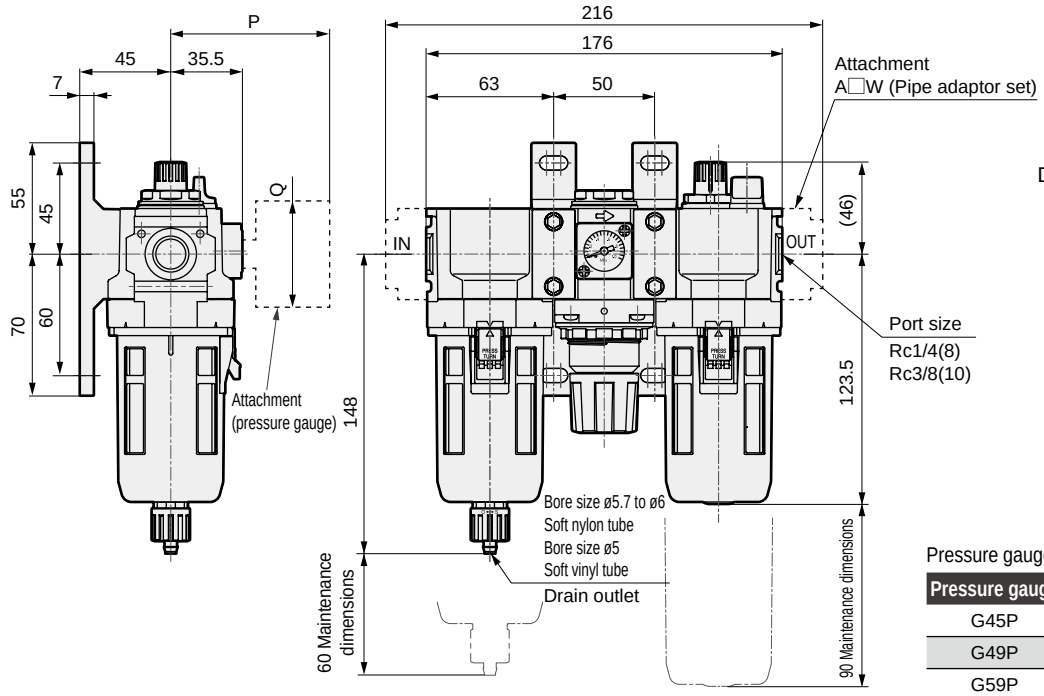

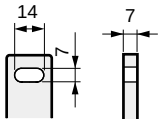

Dimensions of bracket section

Pressure gauge attached optional dimensions table

Pressure gauge	P	Q
G45P	(73.5)	ø39
G49P	(73)	ø43.5
G59P	(75.5)	ø52
G40P	(75)	ø42.5
G52P	(85.5)	ø52.5

● C3000-W

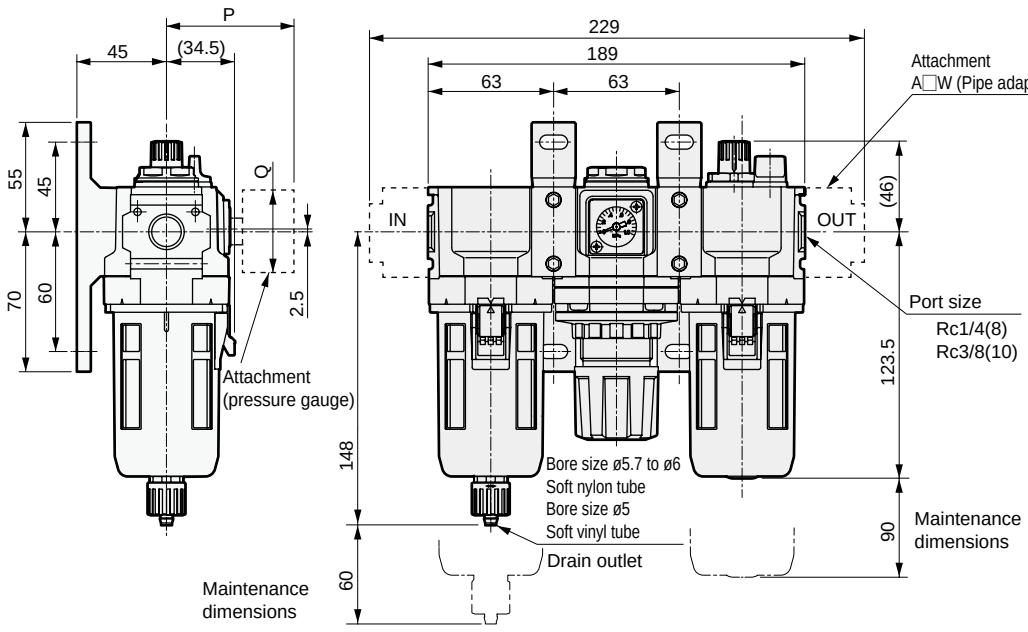

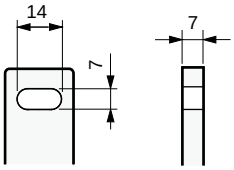

Enlarged view of bracket section

Pressure gauge attached optional dimensions table

Pressure gauge	P	Q
G45P	(70)	ø39
G49P	(69.5)	ø43.5
G59P	(72)	ø52
G40P	(71.5)	ø42.5
G52P	(82)	ø52.5

● Refer to page 113 for dimensions of the metal bowl option filter, and to page 158 for the lubricator.

F.R.L. Combination

Dimensions CAD

● C4000-W

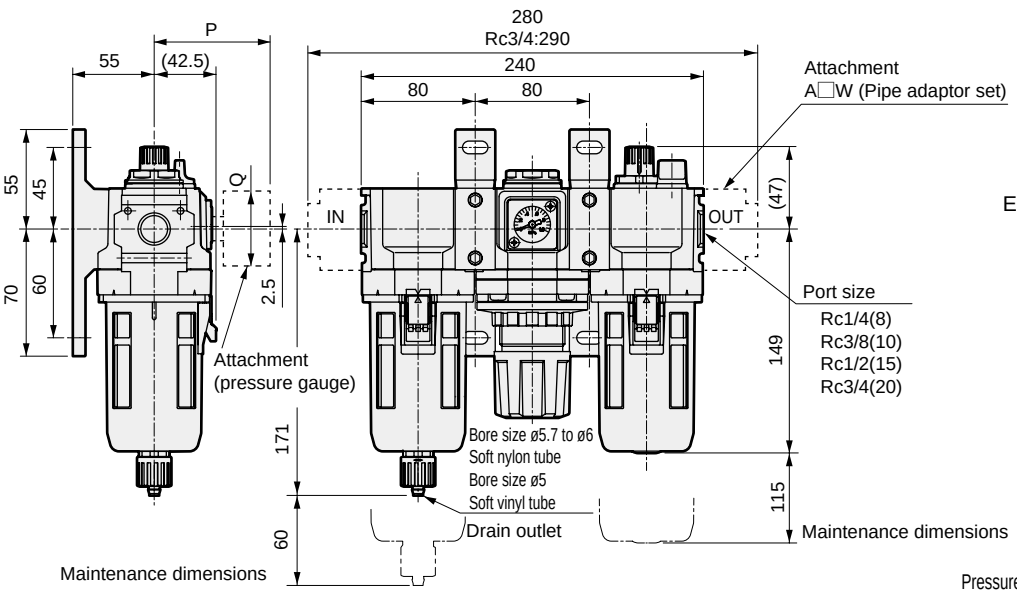

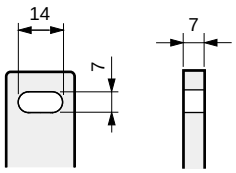

Enlarged view of bracket section

Pressure gauge attached optional dimensions table

Pressure gauge	P	Q
G45P	(75)	ø39
G49P	(74.5)	ø43.5
G59P	(77)	ø52
G40P	(76.5)	ø42.5
G52P	(86)	ø52.5

● Refer to page 113 for dimensions of the metal bowl option filter, and to page 158 for the lubricator.

● C6500-W

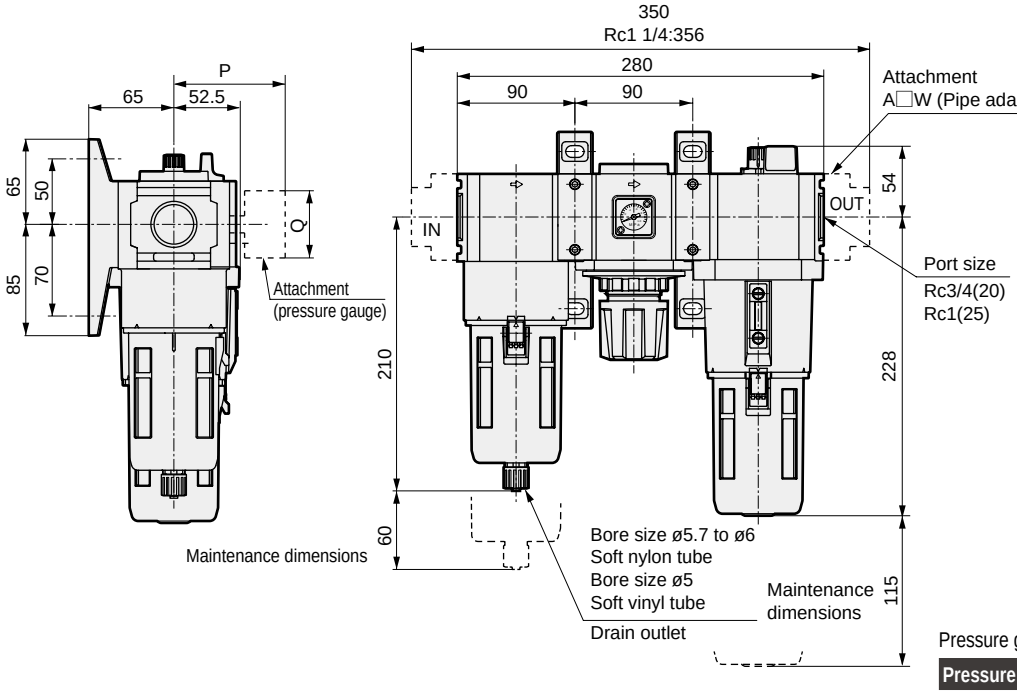

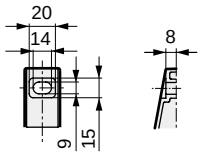

Dimensions of bracket section

Pressure gauge attached optional dimensions table

Pressure gauge	P	Q
G45P	(80)	ø39
G49P	(79.5)	ø43.5
G59P	(82)	ø52
G40P	(81.5)	ø42.5
G52P	(93)	ø52.5

Dimensions

● C8000-W

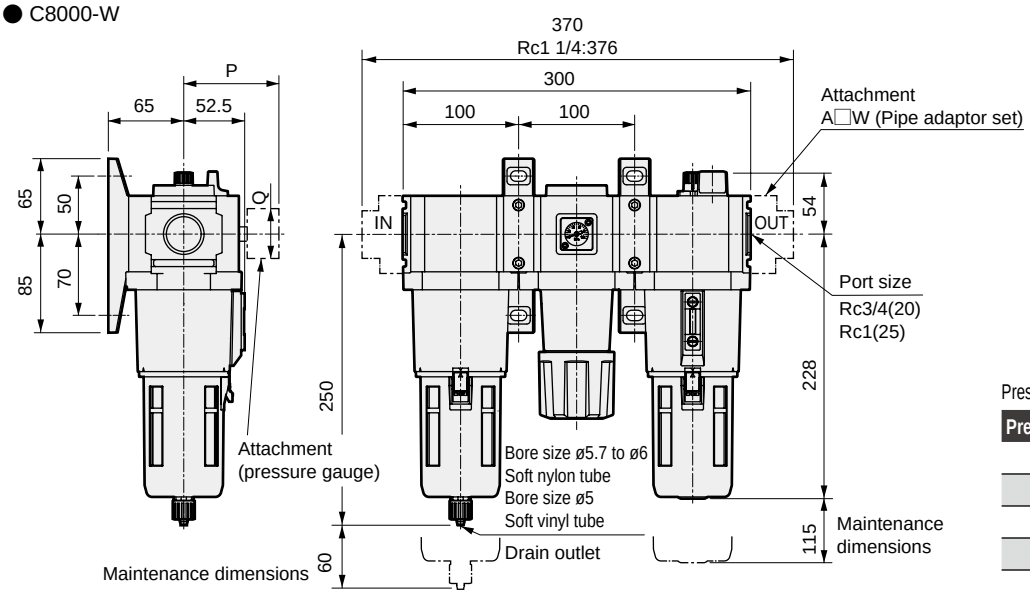

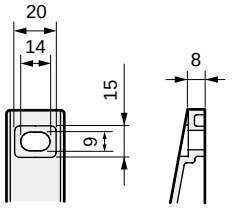

Dimensions of bracket section

Pressure gauge attached optional dimensions table

Pressure gauge	P	Q
G45P	(85)	ø39
G49P	(84.5)	ø43.5
G59P	(87)	ø52
G40P	(86.5)	ø42.5
G52P	(98)	ø52.5

● Refer to page 113 for dimensions of the metal bowl option filter, and to page 158 for the lubricator.

Option assembly dimensions

● C1000-W to C8000-W

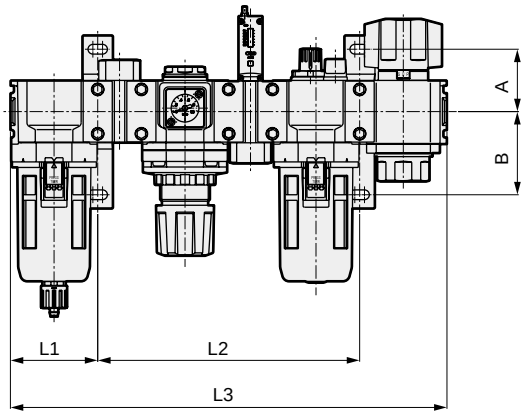

Model No.	A	B
C1000-W	35	45
C2000-W	45	60
C2500-W		
C3000-W		
C4000-W		
C6050-W	50	70
C8000-W		

Assembled option	D			S			P			V			K			DS			DP			DV			DK		
Model No.	L1	L2	L3	L1	L2	L3	L1	L2	L3	L1	L2	L3	L1	L2	L3	L1	L2	L3	L1	L2	L3	L1	L2	L3	L1	L2	L3
C1000-W	40	68	148	40	68	148	-	-	-	40	80	160	-	-	-	40	96	176	-	-	-	40	108	188	-	-	-
C2000-W	50	81.5	194.5	50	81.5	194.5	50	130	243	50	113	226	50	113	226	50	113	226	50	161.5	274.5	50	144.5	257.5	50	144.5	257.5
C2500-W	63	81.5	207.5	63	81.5	207.5	63	130	256	63	113	239	63	113	239	63	113	239	63	161.5	287.5	63	144.5	270.5	63	144.5	270.5
C3000-W	63	94.5	220.5	63	94.5	220.5	63	143	269	63	126	252	63	126	252	63	126	252	63	174.5	300.5	63	157.5	283.5	63	157.5	283.5
C4000-W	80	111.5	271.5	80	111.5	271.5	80	160	320	80	160	303	80	160	303	80	143	303	80	191.5	351.5	80	191.5	334.5	80	191.5	334.5
C4000-20-W *1	100	111.5	311.5	100	111.5	311.5	100	160	360	100	160	343	100	160	343	100	143	343	100	191.5	391.5	100	191.5	374.5	100	191.5	374.5
C6500-W	90	140	330	90	140	330	-	-	-	-	-	-	90	190	370	90	190	380	-	-	-	-	-	-	90	240	420
C8000-W	100	150	350	100	150	350	-	-	-	-	-	-	100	200	390	100	200	400	-	-	-	-	-	-	100	250	440

Assembled option	DSV			DSK			DPV			DPK			SV			SK			PV			PK		
Model No.	L1	L2	L3	L1	L2	L3	L1	L2	L3	L1	L2	L3	L1	L2	L3	L1	L2	L3	L1	L2	L3	L1	L2	L3
C1000-W	40	136	216	-	-	-	-	-	-	-	-	-	40	100	188	-	-	-	-	-	-	-	-	-
C2000-W	50	176	289	50	176	289	50	224.5	337.5	50	224.5	337.5	50	144.5	257.5	50	144.5	257.5	50	193	306	50	193	306
C2500-W	63	176	302	63	176	302	63	224.5	350.5	63	224.5	350.5	63	144.5	270.5	63	144.5	270.5	63	193	319	63	193	319
C3000-W	63	189	315	63	189	315	63	237.5	363.5	63	237.5	363.5	63	157.5	283.5	63	157.5	283.5	63	206	332	63	206	332
C4000-W	80	223	366	80	223	366	80	271.5	414.5	80	271.5	414.5	80	191.5	334.5	80	191.5	334.5	80	240	383	80	240	383
C4000-20-W *1	100	223	406	100	223	406	100	271.5	454.5	100	271.5	454.5	100	191.5	374.5	100	191.5	374.5	100	240	423	100	240	423
C6500-W	-	-	-	90	290	470	-	-	-	-	-	-	-	-	-	90	240	420	-	-	-	-	-	-
C8000-W	-	-	-	100	300	490	-	-	-	-	-	-	-	-	-	100	250	440	-	-	-	-	-	-

L1: Dimensions from the IN edge to center of the T type bracket mounting hole
L2: Spacing dimensions of the mounting hole from the first T type bracket to the second T type bracket
L3: Dimensions from the IN edge to the OUT edge

* Refer to page 346 for details on bracket mounting hole dimensions.
*1: The pipe adaptor is assembled on the OUT side.
As well, the pipe adaptor A400-20-W is attached on both ends of C4000-20-W.

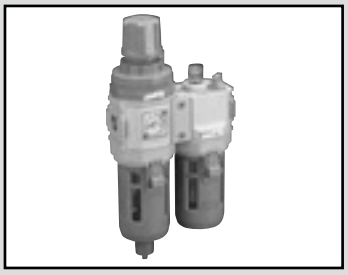

W.L. combination Standard White Series

C1010/C2010/C3010/C4010/C8010-W Series

Integrated filter, regulator and lubricator

● Port size: 1/8 to 1

JIS symbol 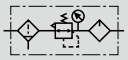

RoHS CAD

Specifications

1 MPa ≈ 145.0 psi, 1 MPa = 10 bar

Item		C1010-W	C2010-W	C3010-W	C4010-W	C8010-W
Appearance						
Comps	Filter/regulator	W1000-W	W2000-W	W3000-W	W4000-W	W8000-W
	Lubricator	L1000-W	L3000-W	L3000-W	L4000-W	L8000-W
Working fluid		Compressed air				
Max. working pressure MPa		1.0 (≈150 psi, 10 bar) *2				
Proof pressure MPa		1.5 (≈220 psi, 15 bar)				
Ambient / fluid temperatures °C		5 (41°F) to 60 (140°F)				
Filtration rating μm		5				
Set pressure MPa		0.05 to 0.85 (*2)	0.05 (≈7.3 psi, 0.5 bar) to 0.85 (≈120 psi, 8.5 bar)			
Min. drip flow rate (*1) m^3/min(ANR)		0.015	0.03	0.03	0.065	0.065
Pressure relief		With relief mechanism				
Oil storage capacity cm^3		20	85	85	170	170(MAX 360)
Drain capacity cm^3		12	25	45	80	80 (*3)
Oil used		Turbine oil Class 1 ISO VG32 (spindle oil cannot be used)				
Port size Rc,NPT,G		1/8,1/4 (3/8 uses an adaptor)	1/4,3/8 (1/2 uses an adaptor)	1/4,3/8 (1/2 uses an adaptor)	1/4,3/8,1/2 (3/4 uses an adaptor)	3/4,1 (1 1/4 uses an adaptor)
Weight kg		0.31	0.77	0.97	1.45	3.57
Standard accessories		Pressure gauge, bracket, bowl guard				

*1: The min. drip flow is that at which five drops of turbine oil drip per minute at the set pressure of 0.5 MPa.
*2: When using C1010-W Series "F1" with auto-drain, the min. working pressure is 0.2 MPa and max. working pressure is 0.7 MPa. Refer to the max. working flow rate table (page 106) for F1000-W-F1 auto-drain for the max. working flow rate. Set the working flow rate to less than or equal to the max. working flow rate.
*3: Up to 170 cm^3 is stored with the manual drain cock only.
*4: In the case of "F" or "FF" with auto-drain, the min. working pressure of auto-drain is 0.1 MPa. Air is purged with initial drain until pressure reaches 0.1 MPa.
*5: In the case of "F1" or "FF1" with auto-drain, the min. working pressure of auto-drain is 0.15 MPa.
*6: When element option "Y" is selected, refer to the max. working flow rate table (page 108) for the max. flow rate. Set the working flow rate to less than or equal to the max. working flow rate.
*7: C2010-W Series with "F1" (with auto-drain) must be used at equal to or less than the max. working flow rate. (Refer to the F2000-W section on page 106 for max. flow rate.)

Option weight

* Add to the weight of the standard accessories.

Unit: kg

Code	Drain discharge					Bowl material		Press.gauge	Pipe adaptor set						
	F	F1	FF	FF1	C	M	M1	T*	A6*W	A8*W	A10*W	A15*W	A20*W	A25*W	A32*W
C1010		0.007			0			0	0.09	0.09	0.09				
C2010		0.02			0		0.2	0		0.16	0.16	0.16			
C3010	0.02	0.02			0	0.2	0.2	0		0.16	0.16	0.16			
C4010	0.02	0.02			0	0.2	0.2	0		0.16	0.16	0.16	0.16		
C8010	0.02	0.02	0.02	0.02	0	0.2	0.2	0					0.53	0.53	0.53

Code	Assembled components				Pressure gauge					
	S	P	V	K	G45P	G49P	G59P	G40P	G52P	R2
C1010	0.15		0.18		0.074	0.086	0.115	0.085	0.15	0.04
C2010	0.23	0.54	0.29	0.34	0.074	0.086		0.085	0.15	0.04
C3010	0.23	0.54	0.29	0.34	0.074	0.086	0.115	0.085	0.15	0.04
C4010	0.23	0.54	0.29	0.34	0.074	0.086	0.115	0.085	0.15	0.04
C8010	0.51			0.34	0.074	0.086	0.115	0.085	0.15	0.04

How to order

C1010 - 6 ○ - W - C - U SV - ○ - A6W ☐

- A Model No.
- B Port size
- C Port thread
- D Option
- E Assembled components
- F Display unit *11
- G Pipe adaptor set (included)
- H Pressure gauge option (included)

* Refer to page 30 for the explanation of the option.

Code	Description	A Model No. C1010	C2010	C3010	C4010	C8010
B Port size						
6	1/8	●				
8	1/4	●	●	●	●	
10	3/8		●	●	●	
15	1/2				●	
20	3/4				●*1	●
25	1					●
C Port thread						*2
Blank	Rc thread	●	●	●	●	●
N	NPT thread	●	●	●	●	●
G	G thread	●	●	●	●	●
D Option						*3
Drain discharge *4 — **Blank**	Filter with manual drain cock, lubricator without manual cock	●	●	●	●	●
C	Lubricator with manual cock	●	●	●	●	●
F	Filter/auto-drain with manual override (NO: Exhaust when not pressurized)			●	●	●
F1	Filter/auto-drain with manual override (NC: No exhaust when not pressurized)	●	●	●	●	●
FF	Filter/large auto-drain with manual override (NO: Exhaust when not pressurized)					●
FF1	Filter/large auto-drain with manual override (NC: No exhaust when not pressurized)					●
Bowl material — **Blank**	Polycarbonate bowl	●	●	●	●	●
Z	Nylon bowl	●	●	●	●	●
M	Metal bowl			●	●	●
M1	Metal bowl with manual drain cock *5		●	●	●	●
Element — **Blank**	5 µm	●	●	●	●	●
Y	0.3 µm (submicron) *6			●	●	●
Pressure Range — **Blank**	0.05 to 0.85 MPa	●	●	●	●	●
L	0.05 to 0.35 MPa *7	●	●	●	●	●
Pressure relief — **Blank**	With relief mechanism	●	●	●	●	●
N	Non-relief	●	●	●	●	●
Pressure gauge — **Blank**	With standard pressure gauge (G401-W)	●	●	●	●	●
T	No pressure gauge (gauge port (1/4) is assembled sealed)	●	●	●	●	●
T8	Pressure gauge ready (gauge port (1/4) is left open)	●	●	●	●	●
Flow Direction — **Blank**	Standard flow (left → right)	●	●	●	●	●
X1	Reverse flow (right → left)	●	●	●	●	●
E Assembled components	**Pages 166 to 171, 182 to 187, 348 and 349**					
Blank	Without assembled component	●	●	●	●	●
U	Assembled component *8	●	●	●	●	●
Assembled component — **S**	Pressure switch (P1100-W, 4100-W, 8100-W)	●	●	●	●	●
P	Pressure switch (P4000-W)		●	●	●	
V	Residual pressure exhaust valve (V1000-W, 3000-W)	●	●	●	●	
K	Residual pressure exhaust valve with keyhole (V3010-W, V6010-W)		●	●	●	●
F Display unit						
Blank	MPa display (Rc thread), psi display (NPT thread), bar display (G thread)	●	●	●	●	●
J1	MPa display (NPT, G thread)	●	●	●	●	●
G Pipe adaptor set (included)	**Page 350 *9**					
Blank	Not included	●	●	●	●	●
A6*W	1/8 pipe adaptor set	●				
A8*W	1/4 pipe adaptor set	●	●	●	●	
A10*W	3/8 pipe adaptor set	●	●	●	●	
A15*W	1/2 pipe adaptor set		●	●	●	
A20*W	3/4 pipe adaptor set				●	●
A25*W	1 pipe adaptor set					●
A32*W	1 1/4 pipe adaptor set					●
*** Adaptor thread**						
Blank	Rc thread	●	●	●	●	●
N	NPT thread	●	●	●	●	●
G	G thread	●	●	●	●	●
H Pressure gauge option (included)	**Page 363 *10**					
Blank	Not included	●	●	●	●	●
G45P	G45D-8-P10(L:G45D-8-P04)	●	●	●	●	●
G49P	G49D-8-P10(L:G49D-8-P04)	●	●	●	●	●
G59P	G59D-8-P10(L:G59D-8-P04)	●		●	●	●
G40P	G40D-8-P10(L:G40D-8-P04)	●	●	●	●	●
G52P	G52D-8-P10(L:G52D-8-P10)	●	●	●	●	●

⚠ Precautions for model No. selection

1: Pipe adaptor A400-20-W is assembled on both ends of C4010-20*-W. A20*W does not need to be selected for the pipe adaptor set.
*2: G threads and NPT threads are available for IN, OUT, gauge port and drain outlet (metal bowl with auto-drain). Attachments P and V are also included.
*3: Select options for the drainage, bowl material, element, and regulator. When selecting options for several items, list options in order from the top.
*4: Refer to page 354 for the auto-drain usage conditions.
*5: When selecting option "M1", select the drain discharge option "C".
*6: Refer to page 108 for max. processing flow rate when option "Y" is selected.
*7: The pressure gauge's indication range is 0 to 0.4 MPa for the option "L".
*8: Installation position for assembled components

Code	Installation position for attachments	Compatible model
S or P	W+(S,P)+L	C1010-W to C8010-W ("P" excludes 8000 Series)
V or K	W+L+(V,K)	C1010-W to C8010-W ("V" excludes 8000 Series and "K" excludes 1000 Series)

Note) Indicate "U"+"S", "P","V" and "K" when selecting an assembled component.
Use customized combination specifications sheet for any other combination.
*9: The joiner set is enclosed with the pipe adaptor set.
*10: The pressure gauge option (included) can be selected only when C Port thread is Rc thread.
*11: Display unit options when selecting NPT threads: If Blank is selected, the pressure unit is psi and the temperature display unit is °F.
When G thread and Blank display unit option are selected, the pressure unit will be bar and the temperature display unit will be °C.
When NPT/G thread and "J1" display unit option are selected, the pressure unit will be MPa and the temperature display unit will be °C.

Dimensions CAD

● C1010-W

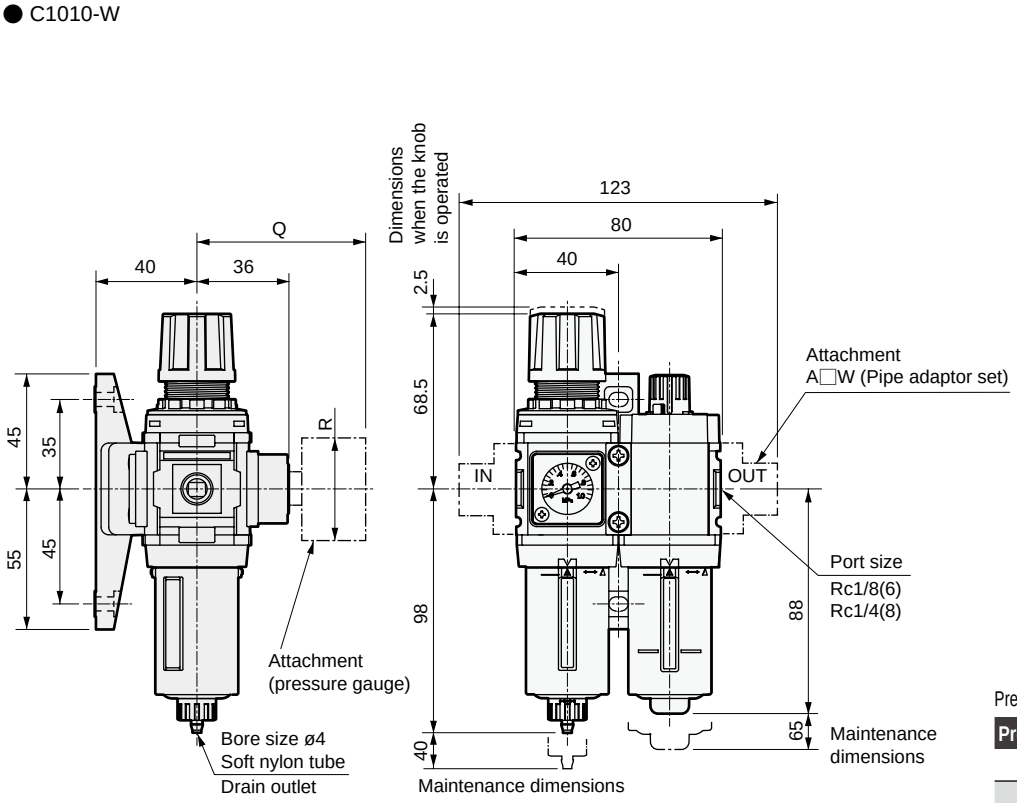

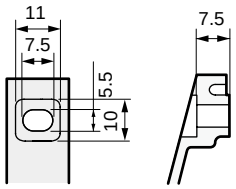

Enlarged view of bracket section

· Optional dimensions
With auto-drain (F1)

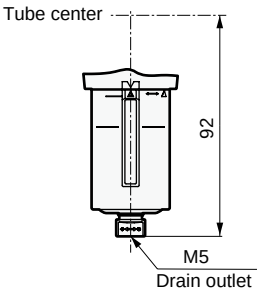

Pressure gauge attached optional dimensions table

Pressure gauge	Q	R
G45P	(74)	ø39
G49P	(73.5)	ø43.5
G59P	(76)	ø52
G40P	(75.5)	ø42.5
G52P	(86)	ø52.5

● C2010-W

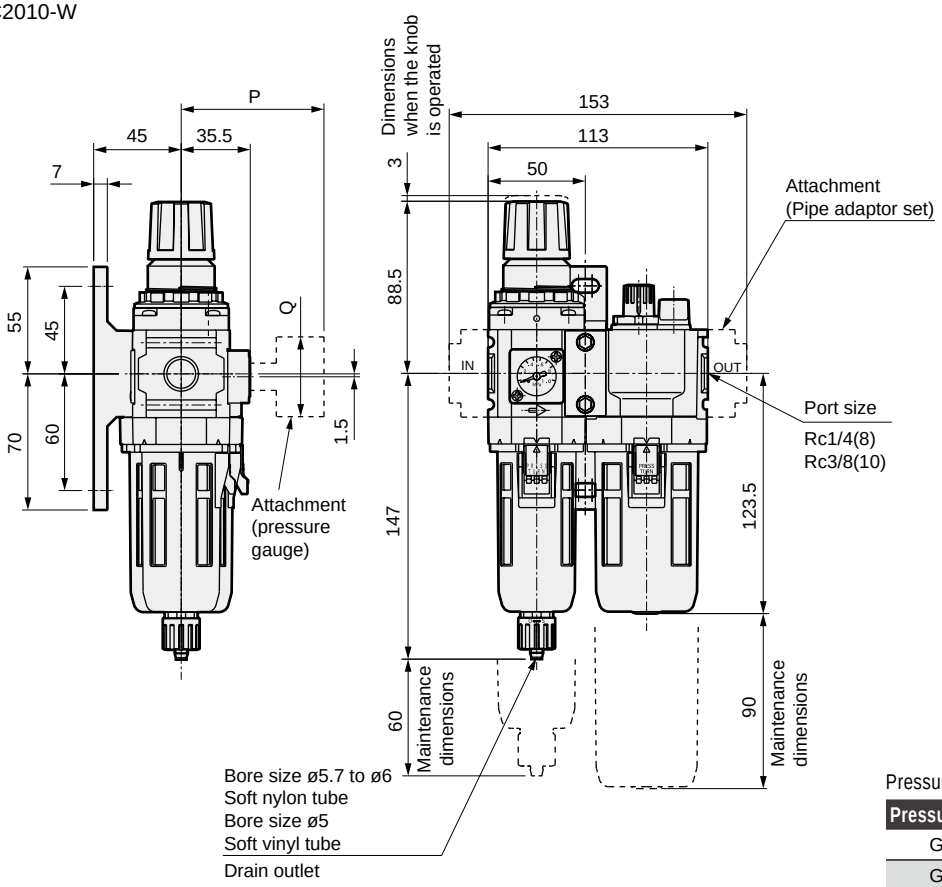

Pressure gauge attached optional dimensions table

Pressure gauge	P	Q
G45P	(73.5)	ø39
G49P	(73)	ø43.5
G40P	(75)	ø42.5
G52P	(85.5)	ø52.5

Dimensions CAD

● C3010-W

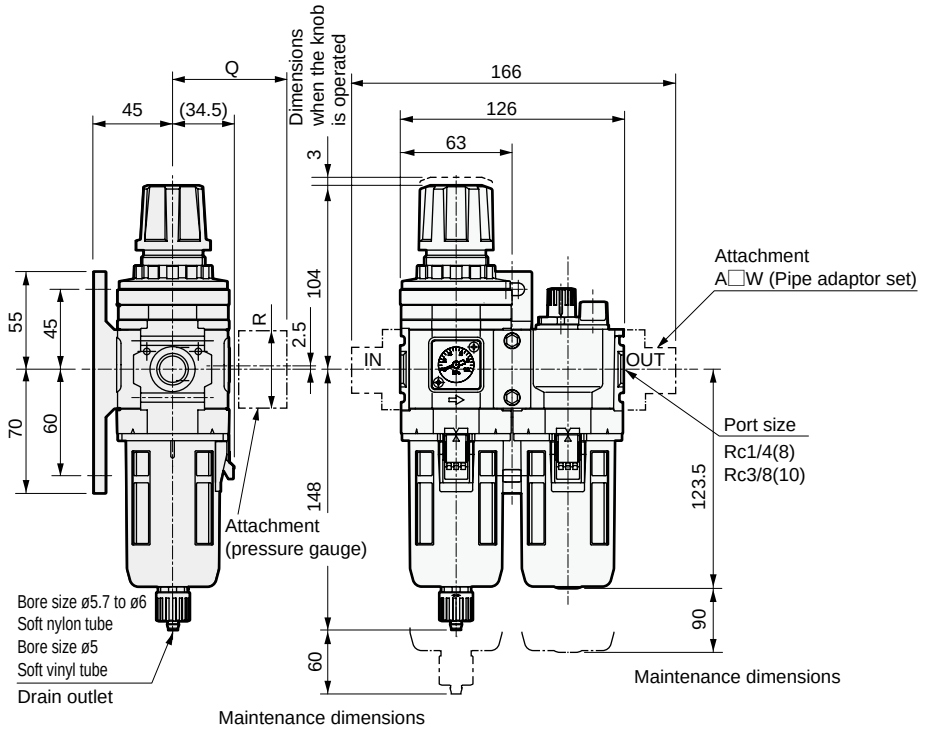

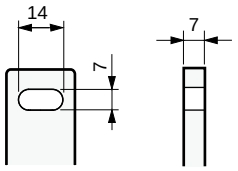

Enlarged view of bracket section

Pressure gauge attached optional dimensions table

Pressure gauge	Q	R
G45P	(70)	ø39
G49P	(69.5)	ø43.5
G59P	(72)	ø52
G40P	(71.5)	ø42.5
G52P	(82)	ø52.5

● Refer to page 96 for the dimensions of the metal bowl option filter/regulator and page 158 for the lubricator.

● C4010-W

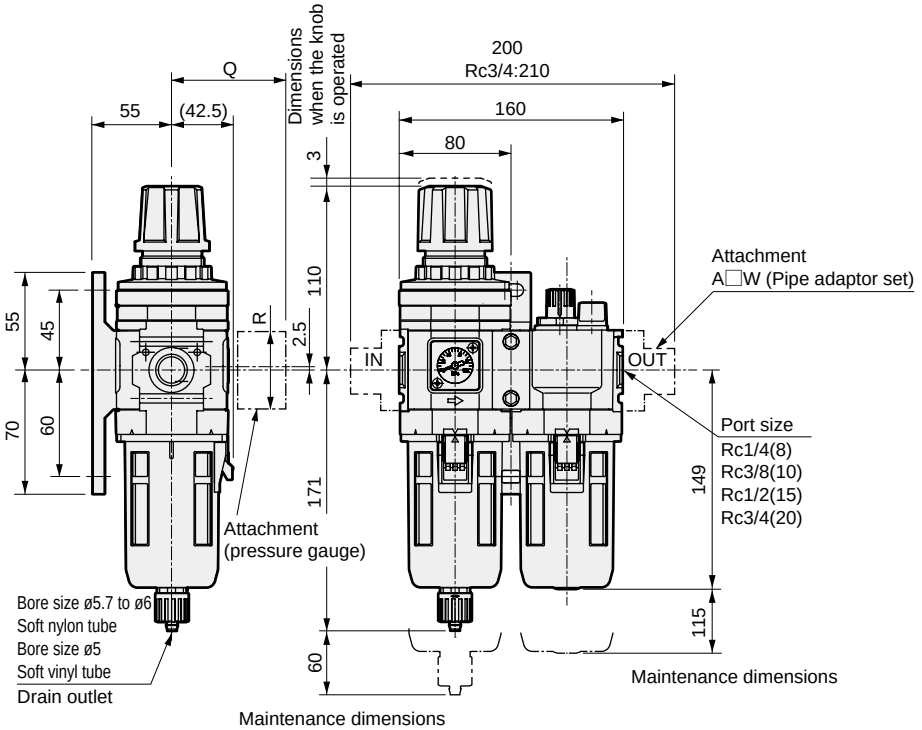

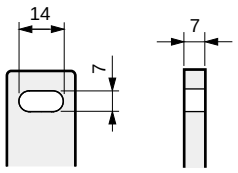

Enlarged view of bracket section

Pressure gauge attached optional dimensions table

Pressure gauge	Q	R
G45P	(75)	ø39
G49P	(74.5)	ø43.5
G59P	(77)	ø52
G40P	(76.5)	ø42.5
G52P	(86)	ø52.5

* Refer to page 96 for the dimensions of the metal bowl option filter/regulator and page 158 for the lubricator.

W.L. Combination

Dimensions CAD

● C8010-W

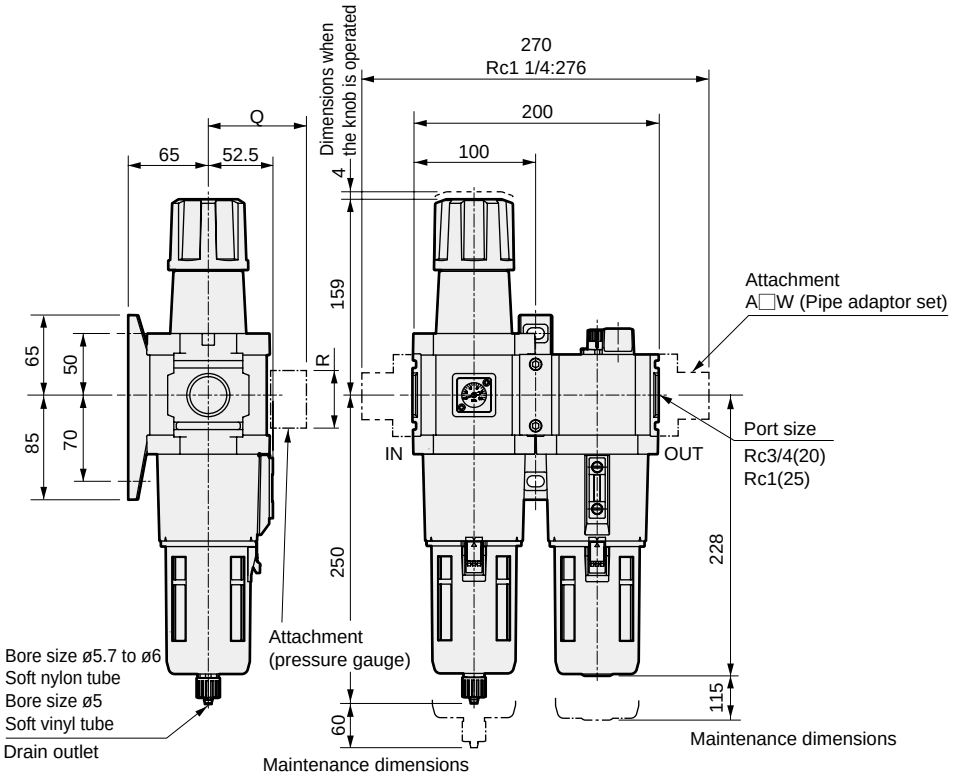

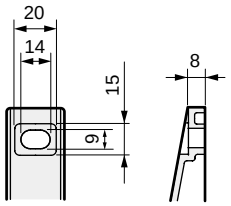

Enlarged view of bracket section

Pressure gauge attached optional dimensions table

Pressure gauge	Q	R
G45P	(85)	ø39
G49P	(84.5)	ø43.5
G59P	(87)	ø52
G40P	(86.5)	ø42.5
G52P	(98)	ø52.5

● Refer to page 96 for the dimensions of the metal bowl option filter/regulator and page 158 for the lubricator.

Option assembly dimensions

● C1010-W to C8010-W

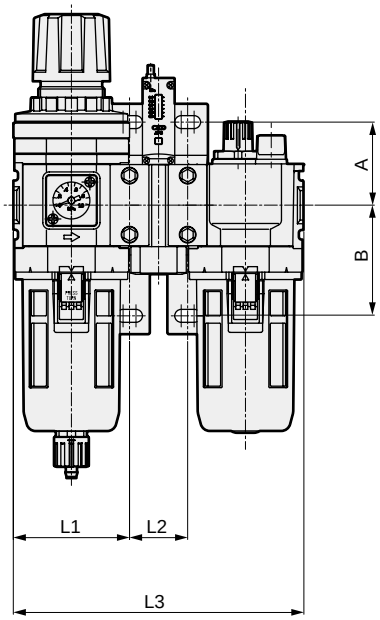

Model No.	A	B
C1010-W	35	45
C2010-W	45	60
C3010-W		
C4010-W		
C8010-W	50	70

Assembled option	S			P			V			K			SV			SK			PV			PK		
Model No.	L1	L2	L3	L1	L2	L3	L1	L2	L3	L1	L2	L3	L1	L2	L3	L1	L2	L3	L1	L2	L3	L1	L2	L3
C1010-W	40	28	108	-	-	-	40	40	120	-	-	-	40	68	148	-	-	-	-	-	-	-	-	-
C2010-W	50	31.5	144.5	50	80	193	50	63	176	50	63	176	50	94.5	207.5	50	94.5	207.5	50	143	256	50	143	256
C3010-W	63	31.5	157.5	63	80	206	63	63	189	63	63	189	63	94.5	220.5	63	94.5	220.5	63	143	269	63	143	269
C4010-W	80	31.5	191.5	80	80	240	80	80	223	80	80	223	80	111.5	271.5	80	111.5	271.5	80	160	303	80	160	303
C4010-20-W *1	100	31.5	231.5	100	80	280	100	80	263	100	80	263	100	111.5	294.5	100	111.5	294.5	100	160	343	100	160	343
C8010-W	100	50	250	-	-	-	-	-	-	100	100	290	-	-	-	100	150	340	-	-	-	-	-	-

L1: Dimensions from the IN edge to center of the T type bracket mounting hole
L2: Spacing dimensions of the mounting hole from the first T type bracket to the second T type bracket
L3: Dimensions from the IN edge to the OUT edge

* Refer to page 346 for details on bracket mounting hole dimensions.
*1: The pipe adaptor is assembled on the OUT side.
As well, the pipe adaptor A400-20-W is assembled on both ends of C4010-20-W.

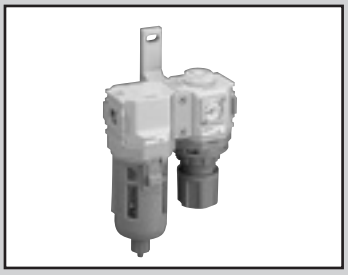

F.R. combination Standard White Series

C1020/C2020/C2520-W C3020/C4020/C6020/C8020-W Series

Integrated filter and regulator

● Port size: 1/8 to 1

JIS symbol 

RoHS CAD

Specifications

1 MPa ≈ 145.0 psi, 1 MPa = 10 bar

Item		C1020-W	C2020-W	C2520-W	C3020-W	C4020-W	C6020-W	C8020-W
Appearance								
Components	Filter	F1000-W	F2000-W	F3000-W	F3000-W	F4000-W	F6000-W	F8000-W
	Regulator	R1000-W	R2000-W	R2000-W	R3000-W	R4000-W	R6000-W	R8000-W
Working fluid		Compressed air						
Max. working pressure MPa		1.0 (≈150 psi, 10 bar) *2						
Proof pressure MPa		1.5 (≈220 psi, 15 bar)						
Ambient / fluid temperatures °C		5 (41°F) to 60 (140°F) *1						
Filtration rating μm		5						
Set pressure MPa		0.05 to 0.85 *2	0.05 (≈7.3 psi, 0.5 bar) to 0.85 (≈120 psi, 8.5 bar)					
Pressure relief		With relief mechanism						
Drain capacity cm^3		12	25	45	45	80	80	80 (*3)
Port size Rc,NPT,G		1/8,1/4 (3/8 uses an adaptor)	1/4,3/8 (1/2 uses an adaptor)	1/4,3/8 (1/2 uses an adaptor)	1/4,3/8 (1/2 uses an adaptor)	1/4,3/8,1/2 (3/4 uses an adaptor)	3/4,1 (1 1/4 uses an adaptor)	3/4,1 (1 1/4 uses an adaptor)
Weight kg		0.28	0.64	0.65	0.79	1.25	2.07	2.93
Standard accessories		Pressure gauge, bracket, bowl guard						

*1: The ambient / fluid temperatures for “RN” or “RP” (pressure switch with display PPR is mounted) and “R2” (digital pressure sensor PPX is attached) is 5 to 50°C.
*2: When using C1020 Series “F1” with auto-drain, the min. working pressure is 0.2 MPa and max. working pressure is 0.7 MPa. Refer to the max. working flow rate table (page 106) for F1000-F1 auto-drain for the max. working flow rate. Set the working flow rate to less than or equal to the max. working flow rate.
*3: Up to 170 cm^3 is stored with the manual drain cock only.
*4: In the case of “F” or “FF” with auto-drain, the min. working pressure of auto-drain is 0.1 MPa. Air is purged with initial drainage until pressure reaches 0.1 MPa.
*5: In the case of “F1” or “FF1” with auto-drain, the min. working pressure of auto-drain is 0.15 MPa.
*6: When element option “Y” is selected, refer to page 108 for max. flow rate. Set the working flow rate to less than or equal to the max. working flow rate.
*7: C2020-W Series with “F1” (with auto-drain) must be used at equal to or less than the max. working flow rate. (Refer to the F2000-W section on page 106 for max. flow rate.)

Option weight

* Add to the weight of the standard accessories.

Unit: kg

Code	Drain discharge				Bowl material		Pressure gauge		Pipe adaptor set						
	F	F1	FF	FF1	M	M1	T*	RN/RP	A6*W	A8*W	A10*W	A15*W	A20*W	A25*W	A32*W
C1020		0.007					0	0.04	0.09	0.09	0.09				
C2020		0.02				0.1	0	0.04		0.16	0.16	0.16			
C2520		0.02			0.1	0.1	0	0.04		0.16	0.16	0.16			
C3020	0.02	0.02			0.1	0.1	0	0.04		0.16	0.16	0.16			
C4020	0.02	0.02			0.1	0.1	0	0.04		0.16	0.16	0.16	0.16		
C6020	0.02	0.02			0.1	0.1	0	0.04					0.53	0.53	0.53
C8020	0.02	0.02	0.02	0.02	0.1	0.1	0	0.04					0.53	0.53	0.53

Code	Assembled components					Pressure gauge					
	D	S	P	V	K	G45P	G49P	G59P	G40P	G52P	R2
C1020	0.056	0.15		0.18		0.074	0.086	0.115	0.085	0.15	0.04
C2020	0.17	0.23	0.54	0.29	0.34	0.074	0.086		0.085	0.15	0.04
C2520	0.17	0.23	0.54	0.29	0.34	0.074	0.086	0.115	0.085	0.15	0.04
C3020	0.17	0.23	0.54	0.29	0.34	0.074	0.086	0.115	0.085	0.15	0.04
C4020	0.17	0.23	0.54	0.29	0.34	0.074	0.086	0.115	0.085	0.15	0.04
C6020	0.45	0.51			0.9	0.074	0.086	0.115	0.085	0.15	0.04
C8020	0.45	0.51			0.9	0.074	0.086	0.115	0.085	0.15	0.04

How to order

C1020 - 6 ○ - W - L - U DSV - ○ - A6W - ○

- A Model No.
- B Port size
- C Port thread
- D Option
- E Assembled components
- F Unit indicated *11
- G Pipe adaptor set (included)
- H Pressure gauge option (attachment)

*** For the explanation of the option,Page 30.**

Code	Description	A Model No. C1020	C2020	C2520	C3020	C4020	C6020	C8020
B Port size								
6	1/8	●						
8	1/4	●	●	●	●	●		
10	3/8		●	●	●	●		
15	1/2					●		
20	3/4					●[B]	●	●
25	1						●	●
C Port thread								*2
Blank	Rc thread	●	●	●	●	●	●	●
N	NPT thread	●	●	●	●	●	●	●
G	G thread	●	●	●	●	●	●	●
D Option								*3
Drain discharge *4	Blank Filter with manual drain cock	●	●	●	●	●	●	●
	F Filter/auto-drain with manual override (NO: Exhaust when not pressurized)			●	●	●	●	●
	F1 Filter/auto-drain with manual override (NC: No exhaust when not pressurized)	●	●	●	●	●	●	●
	FF Filter/large auto-drain with manual override (NO: Exhaust when not pressurized)							●
	FF1 Filter/large auto-drain with manual override (NC: No exhaust when not pressurized)							●
Bowl material	Blank Polycarbonate bowl	●	●	●	●	●	●	●
	Z Nylon bowl	●	●	●	●	●	●	●
	M Metal bowl			●	●	●	●	●
	M1 Metal bowl with manual drain cock		●	●	●	●	●	●
Element	Blank 5 µm	●	●	●	●	●	●	●
	Y 0.3 µm (submicron) *5			●	●	●	●	●
Diff press detect	Blank Without differential pressure detection port	●	●	●	●	●	●	●
	Q With differential pressure detection port (Rc1/4)						●	●
Pressure range	Blank 0.05 to 0.85 MPa	●	●	●	●	●	●	●
	L 0.05 to 0.35 MPa *6	●	●	●	●	●	●	●
Pressure relief	Blank With relief mechanism	●	●	●	●	●	●	●
	N Non-relief	●	●	●	●	●	●	●
Pressure gauge	Blank With standard pressure gauge (G401-W)	●	●	●	●	●	●	●
	T No pressure gauge (gauge port (1/4) is assembled sealed)	●	●	●	●	●	●	●
	T8 Pressure gauge ready (gauge port (1/4) is left open)	●	●	●	●	●	●	●
	T6 Digital pressure sensor PPX attachment option*7	●	●	●	●	●	●	●
	RN Pressure switch with display, PPR assembled (NPN output 1 point)	●		●	●	●	●	●
	RP Pressure switch with display, PPR assembled (PNP output 1 point)	●		●	●	●	●	●
Flow direction	Blank Standard flow (left → right)	●	●	●	●	●	●	●
	X1 IN/OUT reverse flow (right to left)	●	●	●	●	●	●	●
E Assembled components		Pages 166 to 171, 182 to 187, 348 and 349						
Blank	Without assembled component type	●	●	●	●	●	●	●
U	Assembled component type *8	●	●	●	●	●	●	●
Assembled component	D Distributor (D101-W, D401-W, D801-W)	●	●	●	●	●	●	●
	S Pressure switch (P1100-W, 4100-W, 8100-W)	●	●	●	●	●	●	●
	P Pressure switch (P4000-W)		●	●	●	●		
	V Residual pressure exhaust valve (V1000-W, 3000-W)	●	●	●	●	●		
	V1 *12 Residual pressure exhaust valve (V1000-W, 3000-W)	●	●		●	●		
	SV1 *12 Pressure switch (P1100-W, P4100-W), Residual pressure exhaust valve (V1000-W, 3000-W)	●	●		●	●		
	K Residual pressure exhaust valve with locking hole (V3010-W, V6010-W)		●	●	●	●	●	●
F Unit indicated								
Blank	MPa display (Rc thread), psi display (NPT thread)), bar display (G thread)	●	●	●	●	●	●	●
J1	MPa display (NPT, G threads)	●	●	●	●	●	●	●
G Pipe adaptor set (attachments)		Page 350 *9						
Blank	Not included	●	●	●	●	●	●	●
A6*W	1/8 pipe adaptor set	●						
A8*W	1/4 pipe adaptor set	●	●	●	●	●		
A10*W	3/8 pipe adaptor set	●	●	●	●	●		
A15*W	1/2 pipe adaptor set		●	●	●	●		
A20*W	3/4 pipe adaptor set					●	●	●
A25*W	1 pipe adaptor set						●	●
A32*W	1 1/4 pipe adaptor set						●	●
*** Adaptor thread**								
Blank	Rc thread	●	●	●	●	●	●	●
N	NPT thread	●	●	●	●	●	●	●
G	G thread	●	●	●	●	●	●	●
H Pressure gauge option (attachment)		Page 363 *10						
Blank	Not included	●	●	●	●	●	●	●
G45P	G45D-8-P10 (L: G45D-8-P04)	●	●	●	●	●	●	●
G49P	G49D-8-P10(L:G49D-8-P04)	●	●	●	●	●	●	●
G59P	G59D-8-P10(L:G59D-8-P04)	●		●	●	●	●	●
G40P	G40D-8-P10(L:G40D-8-P04)	●	●	●	●	●	●	●
G52P	G52D-8-P10(L:G52D-8-P10)	●	●	●	●	●	●	●
R2 *9	Digital pressure sensor: PPX-R10N-6M	●	●	●	●	●	●	●

Precautions for model No. selection

1: Pipe adaptor A400-20-W is assembled on both ends of C4020-20*-W. A20*W does not need to be selected for the pipe adaptor set.

*2: G threads and NPT threads are available for IN, OUT, gauge port and drain outlet (metal bowl with auto-drain). Attachments P and V are also included.

*3: Select options for the drainage, bowl material, element, differential pressure detection and regulator. When selecting options for several items, list options in order from the top.

*4: Refer to page 354 for the auto-drain usage conditions.

*5: Refer to page 108 for max. processing flow rate when option "Y" is selected.

*6: The pressure gauge's indication range is 0 to 0.4 MPa for the option "L".

*7: When option "T6" is selected, only "Blank" or "R2" can be selected for ❾Pressure gauge (included). The digital pressure sensor PPX mounting port (Rc1/8) is left open.

*8: Installation position for assembled components

Code	Installation position for attachments	Compatibility
D	F+(D)+R	C1020-W to C8020-W
S or P	F+R+(S,P)	C1020-W to C8020-W ("P" excludes 1000, 6000 and 8000 Series)
V or K	F+R+(V, K)	C1020-W to C8020-W ("V" excludes 6000 and 8000 Series and "K" excludes 1000 Series)
V1	(V1)+F+R	C1020-W to C4020-W ("R" is reverse regulator)
SV1	(V1)+F+R+(S)	C1020-W to C4020-W ("R" is reverse regulator)

Note) Indicate "U"+"D", "S","P","V", "V1", "SV1" and "K" when selecting an assembled component.
Use customized combination specifications sheet for any other combination.

*9: The joiner set is enclosed with the pipe adaptor set.

*10: The pressure gauge option (included) can be selected only when ❸ Port thread is Rc thread.

*11: Display unit options when selecting NPT threads: If Blank is selected, the pressure unit is psi and the temperature display unit is °F.
When G thread and Blank display unit option are selected, the pressure unit will be bar and the temperature display unit will be °C.
When NPT/G thread and "J1" display unit option are selected, the pressure unit will be MPa and the temperature display unit will be °C.

*12: Assembled components (V1, SV1) can be selected only with port size and drain discharge options. When selecting other options, they are handled as customized combinations.

F.R. Combination

Dimensions CAD

● C1020-W

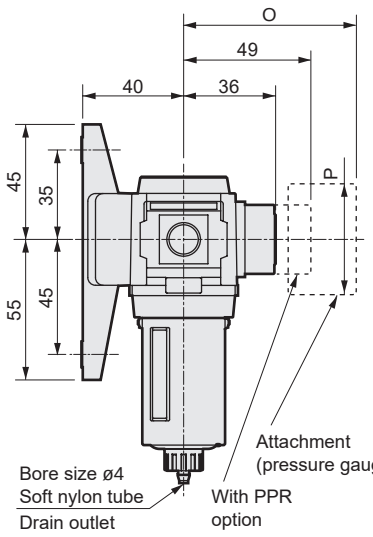

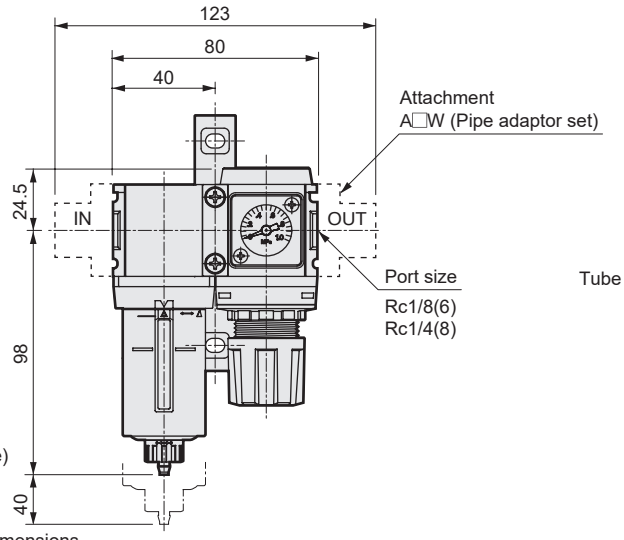

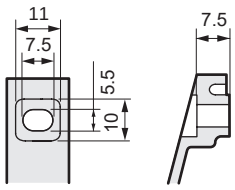

Enlarged view of bracket section

· Optional dimensions
With auto-drain (F1)

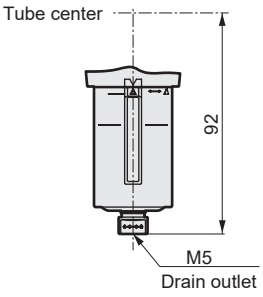

Pressure gauge attached optional dimensions table

Pressure gauge	O	P
G45P	(74)	ø39
G49P	(73.5)	ø43.5
G59P	(76)	ø52
G40P	(75.5)	ø42.5
G50P	(75.5)	ø52.5
G41P	(74)	ø42
G52P	(86)	ø52.5
R2	(74)	□30

● C2020-W

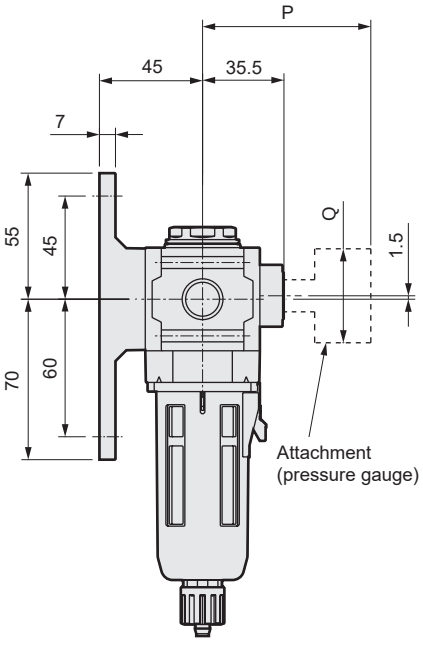

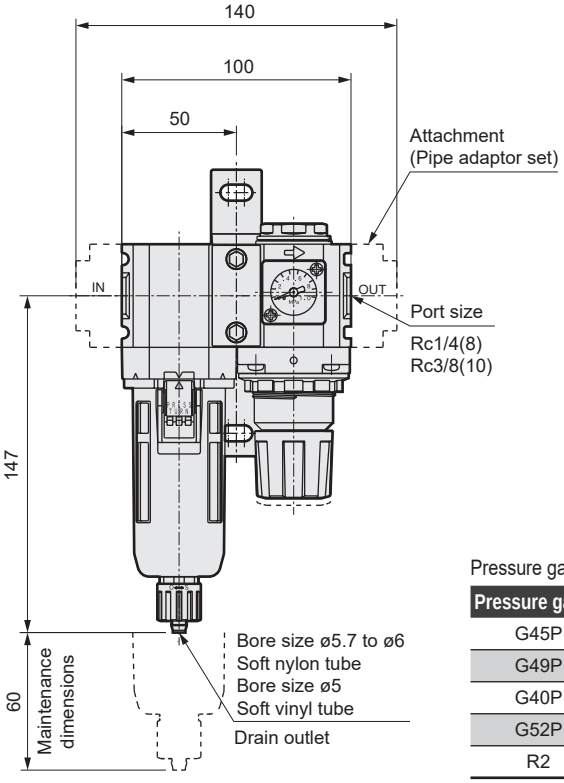

Pressure gauge attached optional dimensions table

Pressure gauge	P	Q
G45P	(73.5)	ø39
G49P	(73)	ø43.5
G40P	(75)	ø42.5
G52P	(85.5)	ø52.5
R2	(73)	□30

Dimensions CAD

● C2520-W

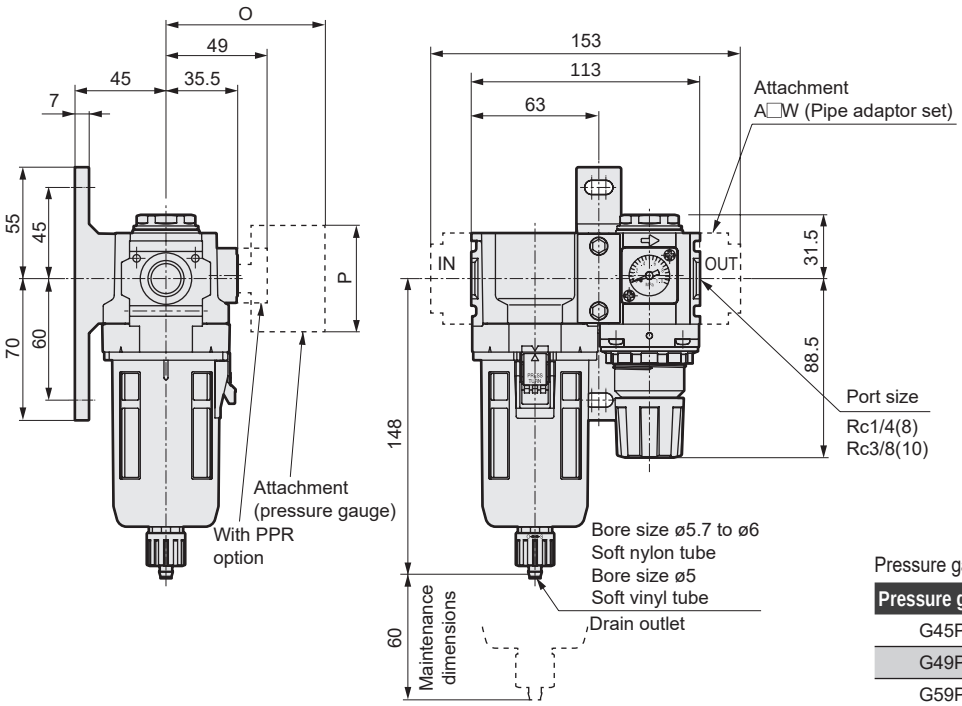

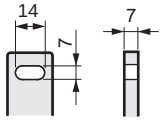

Dimensions of bracket section

Pressure gauge attached optional dimensions table

Pressure gauge	O	P
G45P	(73.5)	ø39
G49P	(73)	ø43.5
G59P	(75.5)	ø52
G40P	(75)	ø42.5
G52P	(85.5)	ø52.5
R2	(73)	□30

● C3020-W

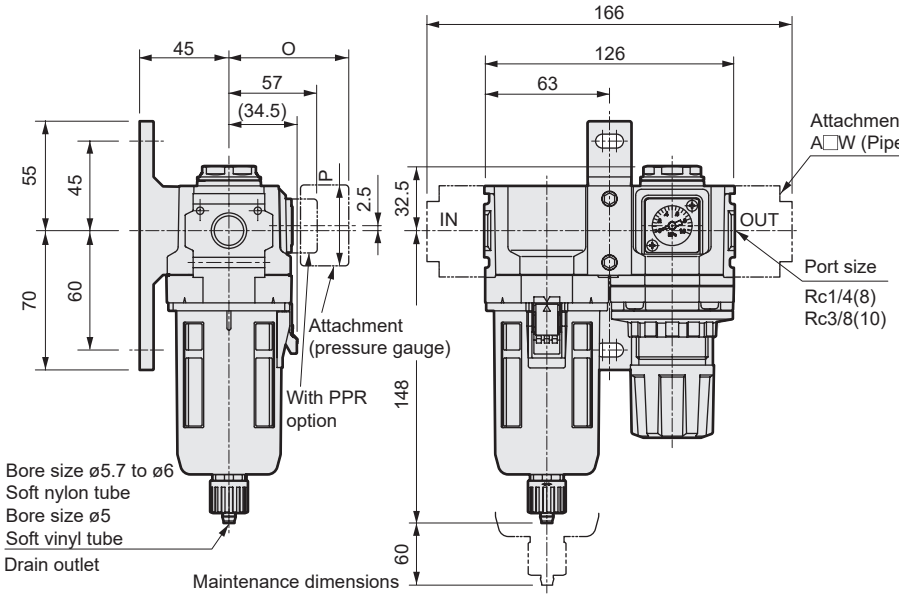

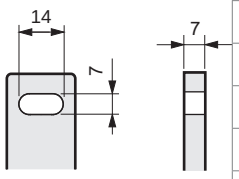

Enlarged view of bracket section

Pressure gauge attached optional dimensions table

Pressure gauge	O	P
G45P	(70)	ø39
G49P	(69.5)	ø43.5
G59P	(72)	ø52
G40P	(71.5)	ø42.5
G52P	(82)	ø52.5
R2	(69.5)	□30

● Refer to page 113 for the optional dimensions of the metal bowl.

F.R. Combination

Dimensions CAD

● C4020-W

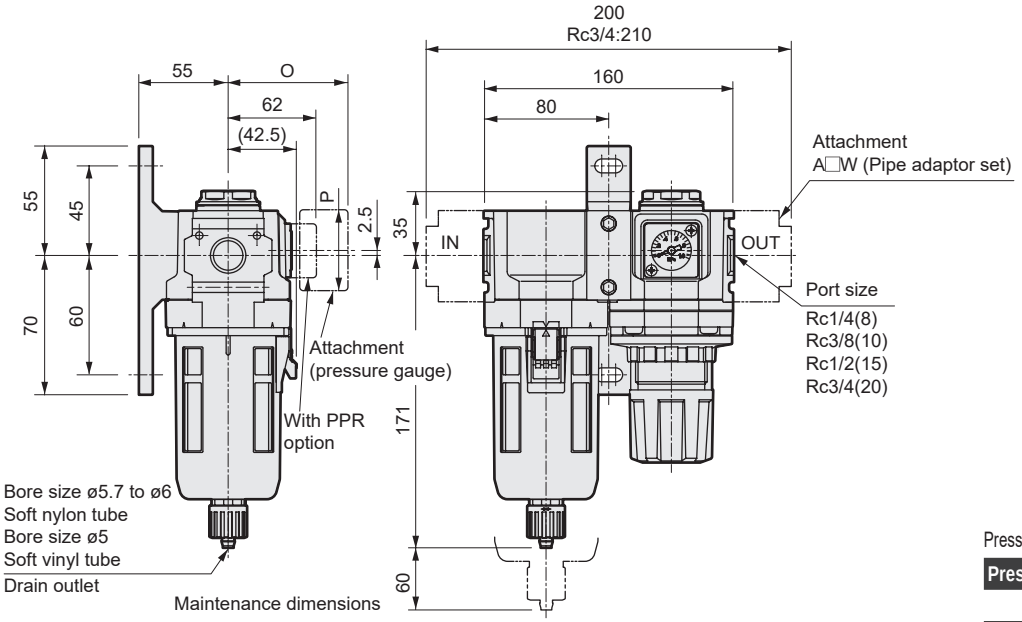

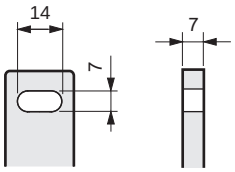

Enlarged view of bracket section

Pressure gauge attached optional dimensions table

Pressure gauge	O	P
G45P	(75)	ø39
G49P	(74.5)	ø43.5
G59P	(77)	ø52
G40P	(76.5)	ø42.5
G52P	(86)	ø52.5
R2	(75)	□30

● Refer to page 113 for the optional dimensions of the metal bowl.

● C6020-W

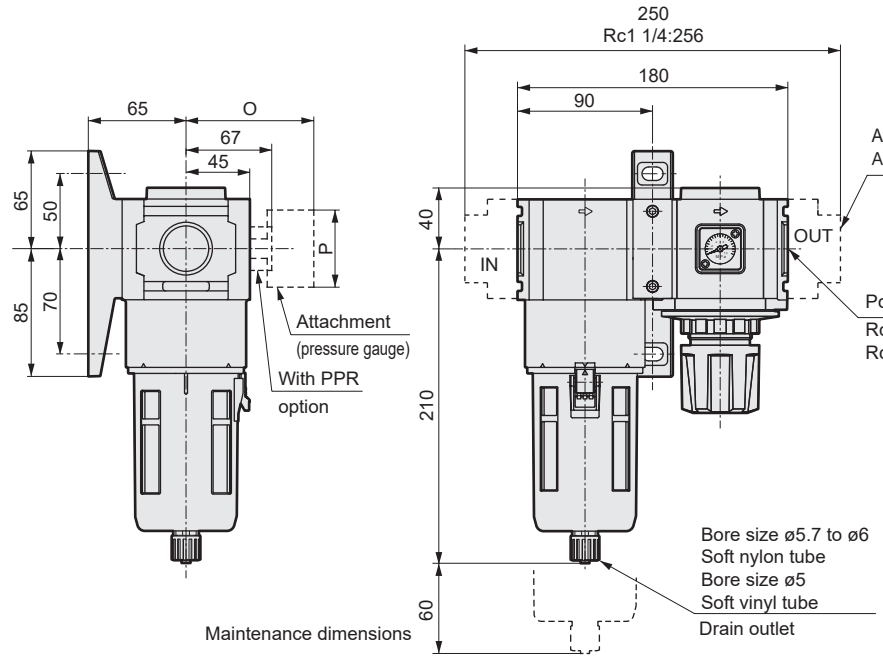

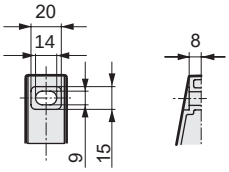

Dimensions of bracket section

Pressure gauge attached optional dimensions table

Pressure gauge	O	P
G45P	(80)	ø39
G49P	(79.5)	ø43.5
G59P	(82)	ø52
G40P	(81.5)	ø42.5
G52P	(93)	ø52.5
R2	(80)	□30

Dimensions

● C8020-W

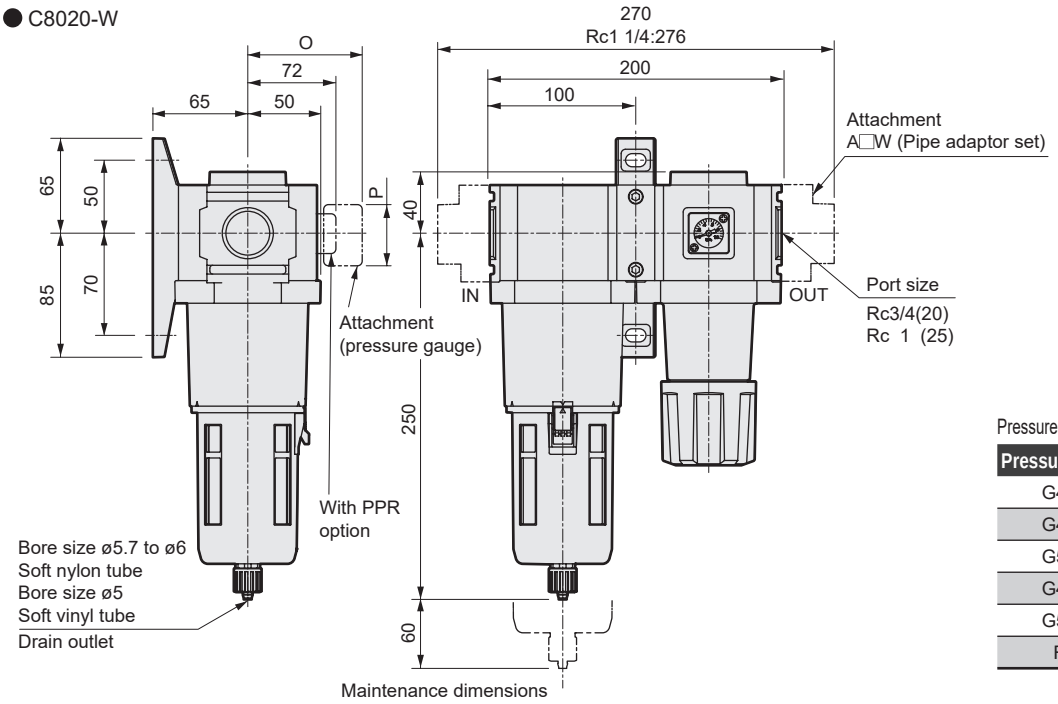

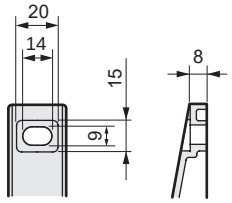

Enlarged view of bracket section

Pressure gauge attached optional dimensions table

Pressure gauge	O	P
G45P	(85)	ø39
G49P	(84.5)	ø43.5
G59P	(87)	ø52
G40P	(86.5)	ø42.5
G52P	(98)	ø52.5
R2	(85)	□30

● Refer to page 113 for the optional dimensions of the metal bowl.

Option assembly dimensions

● C1020-W to C8020-W

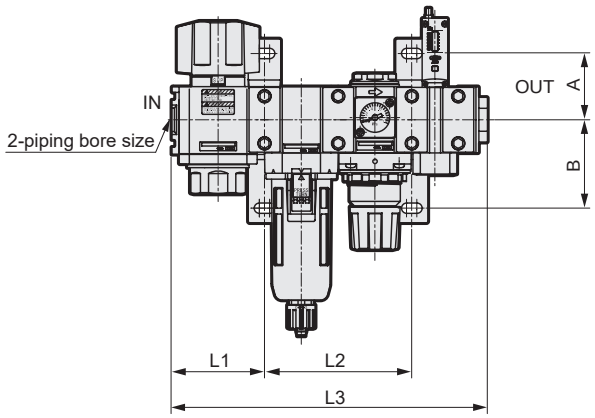

Model No.	A	B
C1020-W	35	45
C2020-W	45	60
C2520-W		
C3020-W		
C4020-W		
C6020-W	50	70
C8020-W		

Assembled option	D			S (*1)			P			V			V1			K			DS (*1)			DP			DV			DK		
Model No.	L1	L2	L3	L1	L2	L3	L1	L2	L3	L1	L2	L3	L1	L2	L3	L1	L2	L3	L1	L2	L3	L1	L2	L3	L1	L2	L3	L1	L2	L3
C1020-W	40	28	108	40	40	129.5	–	–	–	40	40	120	40	40	120	–	–	–	40	68	157.5	–	–	–	40	68	148	–	–	–
C2020-W	50	31.5	131.5	50	50	151.5	50	50	180	50	50	163	63	50	163	50	50	163	50	81.5	183	50	81.5	211.5	50	81.5	194.5	50	81.5	194.5
C2520-W	63	31.5	144.5	63	50	164.5	63	50	193	63	50	176	–	–	–	63	50	176	63	81.5	196	63	81.5	224.5	63	81.5	207.5	63	81.5	207.5
C3020-W	63	31.5	157.5	63	63	177.5	63	63	206	63	63	189	63	63	189	63	63	189	63	94.5	209	63	94.5	237.5	63	94.5	220.5	63	94.5	220.5
C4020-W	80	31.5	191.5	80	80	211.5	80	80	240	80	80	223	63	80	223	80	80	223	80	111.5	243	80	111.5	271.5	80	111.5	254.5	80	111.5	254.5
C4020-20-W *1	100	31.5	231.5	100	80	231.5	100	80	280	100	80	263	–	–	–	100	80	263	100	111.5	263	100	111.5	311.5	100	111.5	294.5	100	111.5	294.5
C6020-W	90	50	230	90	90	265	–	–	–	–	–	–	–	–	–	90	90	270	90	140	315	–	–	–	–	–	–	90	140	320
C8020-W	100	50	250	100	100	285	–	–	–	–	–	–	–	–	–	100	100	290	100	150	335	–	–	–	–	–	–	100	150	340

Assembled option	DSV			DSK			DPV			DPK			SV			SV1			SK			PV			PK		
Model No.	L1	L2	L3	L1	L2	L3	L1	L2	L3	L1	L2	L3	L1	L2	L3	L1	L2	L3	L1	L2	L3	L1	L2	L3	L1	L2	L3
C1020-W	40	96	176	–	–	–	–	–	–	–	–	–	40	68	148	40	80	170	–	–	–	–	–	–	–	–	–
C2020-W	50	113	226	50	113	226	50	162	274.5	50	162	274.5	50	81.5	194.5	63	100	215	50	81.5	194.5	50	130	243	50	130	243
C2520-W	63	113	239	63	113	239	63	162	287.5	63	162	287.5	63	81.5	207.5	–	–	–	63	81.5	207.5	63	130	256	63	130	256
C3020-W	63	126	252	63	126	252	63	175	300.5	63	175	300.5	63	94.5	220.5	63	126	241	63	94.5	220.5	63	143	269	63	143	269
C4020-W	80	143	286	80	143	286	80	191.5	334.5	80	191.5	334.5	80	111.5	254.5	63	160	275	80	111.5	254.5	80	160	303	80	160	303
C4020-20-W *1	100	143	326	100	143	326	100	191.5	374.5	100	191.5	374.5	100	111.5	294.5	–	–	–	100	111.5	294.5	100	160	343	100	160	343
C6020-W	–	–	–	90	190	370	–	–	–	–	–	–	–	–	–	–	–	–	90	140	320	–	–	–	–	–	–
C8020-W	–	–	–	100	200	390	–	–	–	–	–	–	–	–	–	–	–	–	100	150	340	–	–	–	–	–	–

L1: Dimensions from the IN edge to center of the T-bracket mounting hole
L2: Spacing dimensions of the mounting hole from the first T-bracket to the second T-bracket
L3: Dimensions from the IN edge to the OUT edge

* Refer to page 346 for details on bracket mounting hole dimensions.
*1: The pipe adaptor is assembled on the OUT side.
As well, the pipe adaptor A400-20-W is assembled on both ends of C4020-20-W.

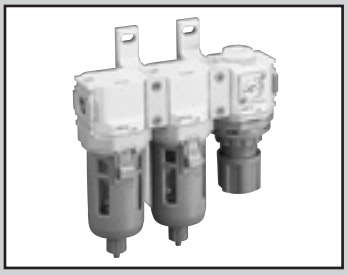

F.M.R. combination Standard White Series

C1030/C2030/C2530-W C3030/C4030/C6030/C8030-W Series

Integrated filter, oil mist filter and regulator

● Port size: 1/8 to 1

JIS symbol 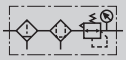

RoHS CAD

Specifications

1 MPa ≈ 145.0 psi, 1 MPa = 10 bar

Item		C1030-W	C2030-W	C2530-W	C3030-W	C4030-W	C6030-W	C8030-W
Appearance								
Comps	Filter	F1000-W	F2000-W	F3000-W	F3000-W	F4000-W	F6000-W	F8000-W
	Oil mist filter	M1000-W	M2000-W	M3000-W	M3000-W	M4000-W	M6000-W	M8000-W
	Regulator	R1000-W	R2000-W	R2000-W	R3000-W	R4000-W	R6000-W	R8000-W
Working fluid		Compressed air						
Max. working pressure MPa		1.0 (≈150 psi, 10 bar) *3						
Proof pressure MPa		1.5 (≈220 psi, 15 bar)						
Ambient / fluid temperatures °C		5 (41°F) to 60 (140°F)						*2
Set pressure MPa		0.05 to 0.85 *3	0.05 (≈7.3 psi, 0.5 bar) to 0.85 (≈120 psi, 8.5 bar)					
Pressure relief		With relief mechanism						
Port size Rc,NPT,G		1/8,1/4 (3/8 uses an adaptor)	1/4,3/8 (1/2 uses an adaptor)	1/4,3/8 (1/2 uses an adaptor)	1/4,3/8 (1/2 uses an adaptor)	1/4,3/8,1/2 (3/4 uses an adaptor)	3/4,1 (11/4 uses an adaptor)	3/4,1 (11/4 uses an adaptor)
Weight kg		0.40	0.98	1.02	1.10	1.86	3.19	4.45
Secondary oil concentration (Oil mist filter outlet side)		0.01 mg/m^3 or less (0.1 mg/m^3 or less after oil saturation)						
Max. flow rate (*1) m^3/min		0.15	0.25	0.36	0.36	0.825	1.27	2.6

*1: The max. flow is for a primary pressure of 0.7 MPa. Refer to page 108 for the max. flow rate of element option "Y".
*2: The ambient / fluid temperatures for "RN" or "RP" (pressure switch with display PPR is mounted) and "R2" (digital pressure sensor PPX is attached) is 5 to 50°C.
*3: When using C1030-W Series "F1" with auto-drain, the NC auto-drain is included for both the filter and oil mist filter. Min. working pressure is 0.2 MPa and max. working pressure is 0.7 MPa. Refer to the max. working processing flow rate table (page 119) for M1000-W-F1 auto-drain for the max. working flow rate.
*4: Refer to page 116 for details on other oil mist filters.
*5: In the case of "F" with auto-drain, the supply air pressure is 0.15 MPa or more. For the air filter auto-drain, air is purged with the initial drainage until pressure reaches 0.1 MPa.
*6: When "F1" with an auto-drain is selected, the filter, oil mist filter, and NC auto-drain are assembled, but the supply air pressure must be 0.15 MPa and over.

Option weight

* Add to the weight of the standard accessories.

Unit: kg

Code	Drain discharge				Bowl material		Pressure gauge		Pipe adaptor set						
	F	F1	FF	FF1	M	M1	T*	RN/RP	A6*W	A8*W	A10*W	A15*W	A20*W	A25*W	A32*W
C1030		0.014					0	0.04	0.09	0.09	0.09				
C2030		0.04				0.2	0	0.04		0.16	0.16	0.16			
C2530		0.04			0.2	0.2	0	0.04		0.16	0.16	0.16			
C3030	0.04	0.04			0.2	0.2	0	0.04		0.16	0.16	0.16			
C4030	0.04	0.04			0.2	0.2	0	0.04		0.16	0.16	0.16	0.16		
C6030	0.04	0.04			0.2	0.2	0	0.04					0.53	0.53	0.53
C8030	0.04	0.04	0.04	0.04	0.2	0.2	0	0.04					0.53	0.53	0.53

Code	Assembled components					Pressure gauge					
	D	S	P	V	K	G45P	G49P	G59P	G40P	G52P	R2
C1030	0.056	0.15		0.18		0.074	0.086	0.115	0.085	0.15	0.04
C2030	0.17	0.23	0.54	0.29	0.34	0.074	0.086		0.085	0.15	0.04
C2530	0.17	0.23	0.54	0.29	0.34	0.074	0.086	0.115	0.085	0.15	0.04
C3030	0.17	0.23	0.54	0.29	0.34	0.074	0.086	0.115	0.085	0.15	0.04
C4030	0.17	0.23	0.54	0.29	0.34	0.074	0.086	0.115	0.085	0.15	0.04
C6030	0.45	0.51			0.9	0.074	0.086	0.115	0.085	0.15	0.04
C8030	0.45	0.51			0.9	0.074	0.086	0.115	0.085	0.15	0.04

How to order

C1030 - 6 ○ - W - L - U DSV - ○ - A6W - ○

* Refer to page 30 for the explanation of the option.

Ⓐ Model No.
Ⓑ Port size
Ⓒ Port thread
Ⓓ Option
Ⓔ Assembled components
Ⓕ Display unit *12
Ⓖ Pipe adaptor set (included)
Ⓗ Pressure gauge option (included)

Code	Description	Ⓐ Model No. C1030	C2030	C2530	C3030	C4030	C6030	C8030
Ⓑ Port size								
6	1/8	●						
8	1/4	●	●	●	●	●		
10	3/8		●	●	●	●		
15	1/2					●		
20	3/4					●*1	●	●
25	1						●	●
Ⓒ Port thread								*2
Blank	Rc thread	●	●	●	●	●	●	●
N	NPT thread	●	●	●	●	●	●	●
G	G thread	●	●	●	●	●	●	●
Ⓓ Option								*3
Drain discharge *4, *5 — Blank	With manual drain cock	●	●	●	●	●	●	●
F	Auto-drain with manual override (NO: Exhaust when not pressurized)			●	●	●	●	●
F1	Auto-drain with manual override (NC: No exhaust when not pressurized)	●	●	●	●	●	●	●
FF	Large auto-drain with manual override (NO: Exhaust when not pressurized)							●
FF1	Large auto-drain with manual override (NC: No exhaust when not pressurized)							●
Bowl material — Blank	Polycarbonate bowl	●	●	●	●	●	●	●
Z	Nylon bowl	●	●	●	●	●	●	●
M	Metal bowl			●	●	●	●	●
M1	Metal bowl with manual drain cock		●	●	●	●	●	●
Element — Blank	5 µm	●	●	●	●	●	●	●
Y	0.3 µm (submicron) *6			●	●	●	●	●
Diff press detect — Blank	Without differential pressure detection port	●	●	●	●	●	●	●
Q	With differential pressure detection port (Rc 1/4)						●	●
Pressure range — Blank	0.05 to 0.85 MPa	●	●	●	●	●	●	●
L	0.05 to 0.35 MPa *7	●	●	●	●	●	●	●
Pressure relief — Blank	With relief mechanism	●	●	●	●	●	●	●
N	Non-relief	●	●	●	●	●	●	●
Pressure gauge — Blank	With standard pressure gauge (G401-W)	●	●	●	●	●	●	●
T	No pressure gauge (gauge port (1/4) is assembled sealed)	●	●	●	●	●	●	●
T8	Pressure gauge ready (gauge port (1/4) is left open)	●	●	●	●	●	●	●
T6	Digital pressure sensor PPX included option *8	●	●	●	●	●	●	●
RN	Pressure switch with display PPR mounted (NPN output 1 point)	●		●	●	●	●	●
RP	Pressure switch with display PPR mounted (PNP output 1 point)	●		●	●	●	●	●
Flow Direction — Blank	Standard flow (left → right)	●	●	●	●	●	●	●
X1	Reverse flow (right → left)	●	●	●	●	●	●	●
Ⓔ Assembled components								Pages 166 to 171, 182 to 187, 348 and 349
Blank	Without assembled component	●	●	●	●	●	●	●
U	Assembled component *9	●	●	●	●	●	●	●
Assembled component — D	Distributor (D101-W, D401-W, D801-W)	●	●	●	●	●	●	●
S	Pressure switch (P1100-W, 4100-W, 8100-W)	●	●	●	●	●	●	●
P	Pressure switch (P4000-W)		●	●	●	●		
V	Residual pressure exhaust valve (V1000-W, 3000-W)	●	●	●	●	●		
K	Residual pressure exhaust valve with keyhole (V3010-W, V6010-W)		●	●	●	●	●	●
Ⓕ Display unit								
Blank	MPa display (Rc thread), psi display (NPT thread), bar display (G thread)	●	●	●	●	●	●	●
J1	MPa display (NPT, G thread)	●	●	●	●	●	●	●
Ⓖ Pipe adaptor set (included)								Page 350 *10
Blank	Not included	●	●	●	●	●	●	●
A6*W	1/8 pipe adaptor set	●						
A8*W	1/4 pipe adaptor set	●	●	●	●	●		
A10*W	3/8 pipe adaptor set	●	●	●	●	●		
A15*W	1/2 pipe adaptor set		●	●	●	●		
A20*W	3/4 pipe adaptor set					●	●	●
A25*W	1 pipe adaptor set						●	●
A32*W	1 1/4 pipe adaptor set						●	●
*** Adaptor thread**								
Blank	Rc thread	●	●	●	●	●	●	●
N	NPT thread	●	●	●	●	●	●	●
G	G thread	●	●	●	●	●	●	●
Ⓗ Pressure gauge option (included)								Page 363 *11
Blank	Not included	●	●	●	●	●	●	●
G45P	G45D-8-P10(L:G45D-8-P04)	●	●	●	●	●	●	●
G49P	G49D-8-P10(L:G49D-8-P04)	●	●	●	●	●	●	●
G59P	G59D-8-P10(L:G59D-8-P04)	●		●	●	●	●	●
G40P	G40D-8-P10(L:G40D-8-P04)	●	●	●	●	●	●	●
G52P	G52D-8-P10(L:G52D-8-P10)	●	●	●	●	●	●	●
R2 *8	Digital pressure sensor: PPX-R10N-6M	●	●	●	●	●	●	●

⚠ Precautions for model No. selection

1: Pipe adaptor A400-20-W is assembled on both ends of C4030-20*-W. A20*W does not need to be selected for the pipe adaptor set.
*2: G threads and NPT threads are available for IN, OUT, gauge port and drain outlet (metal bowl with auto-drain). Attachments P and V are also included.
*3: Select options for the drainage, bowl material, element, differential pressure detection and regulator. When selecting options for several items, list options in order from the top.
*4: Refer to page 354 for the auto-drain usage conditions.
*5: When option code "F" is selected, the NO auto-drain is enclosed for the air filter and the NC auto-drain is enclosed for the oil mist filter.
For "FF" and "FF1", only the filter has a large discharge rate. The oil mist filter is normal NC auto-drain.
*6: Refer to page 108 for max. processing flow rate when option "Y" is selected.
*7: The pressure gauge's indication range is 0 to 0.4 MPa for the option "L".
*8: When option "T6" is selected, only "Blank" or "R2" can be selected for ➲Pressure gauge (included). The digital pressure sensor PPX mounting port (Rc1/8) is left open.
*9: Installation position for assembled components

Code	Attachment Install positions	Compatible model
D	F+M+(D)+R	C1030-W to C8030-W
S or P	F+M+R+(S,P)	C1030-W to C8030-W ("P" excludes 1000, 6000 and 8000 Series)
V or K	F+M+R+(V,K)	C1030-W to C4030-W ("V" excludes 6000 and 8000 Series and "K" excludes 1000 Series)

Note) Indicate "U"+"D", "S","P","V" and "K" when selecting an assembled component.
Use customized combination specifications sheet for any other combination.
*10: The joiner set is enclosed with the pipe adaptor set.
*11: The pressure gauge option (included) can be selected only when Ⓒ Port thread is Rc thread.
*12: Display unit options when selecting NPT threads: If Blank is selected, the pressure unit is psi and the temperature display unit is °F.
When G thread and Blank display unit option are selected, the pressure unit will be bar and the temperature display unit will be °C.
When NPT/G thread and "J1" display unit option are selected, the pressure unit will be MPa and the temperature display unit will be °C.

Dimensions CAD

● C1030-W

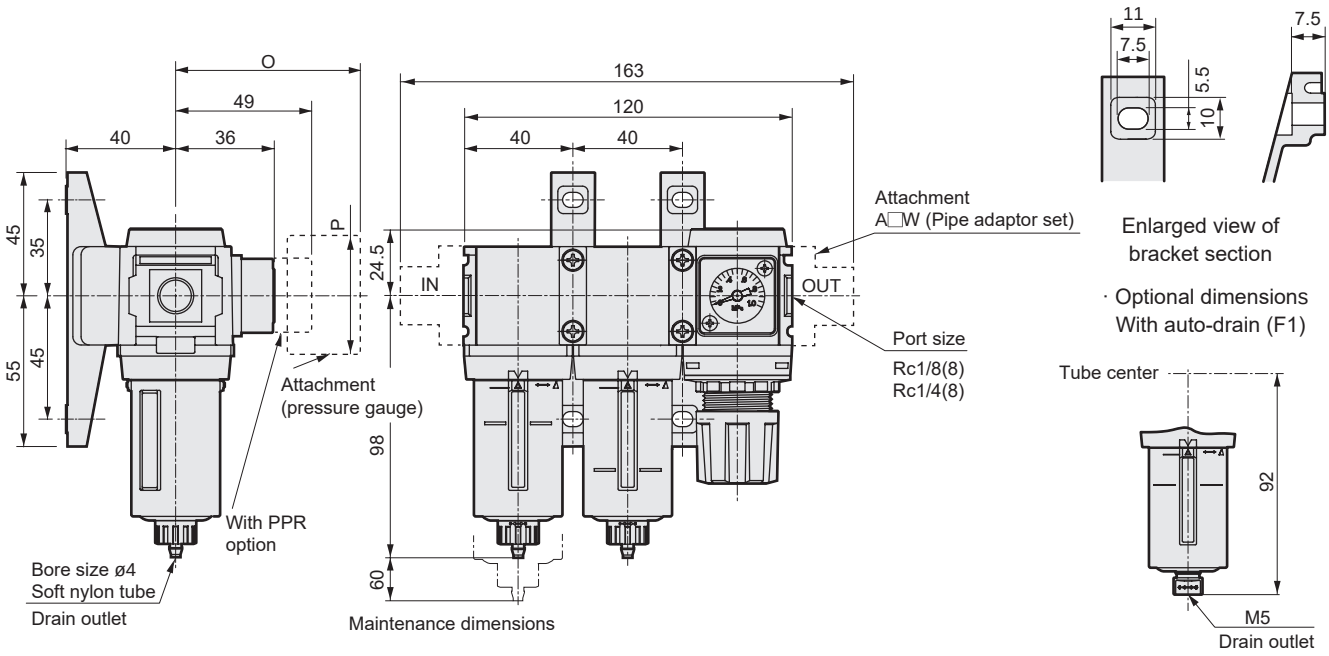

Pressure gauge attached optional dimensions table

Pressure gauge	O	P
G45P	(74)	ø39
G49P	(73.5)	ø43.5
G59P	(76)	ø52
G40P	(75.5)	ø42.5
G52P	(86)	ø52.5
R2	(74)	□30

● C2030-W

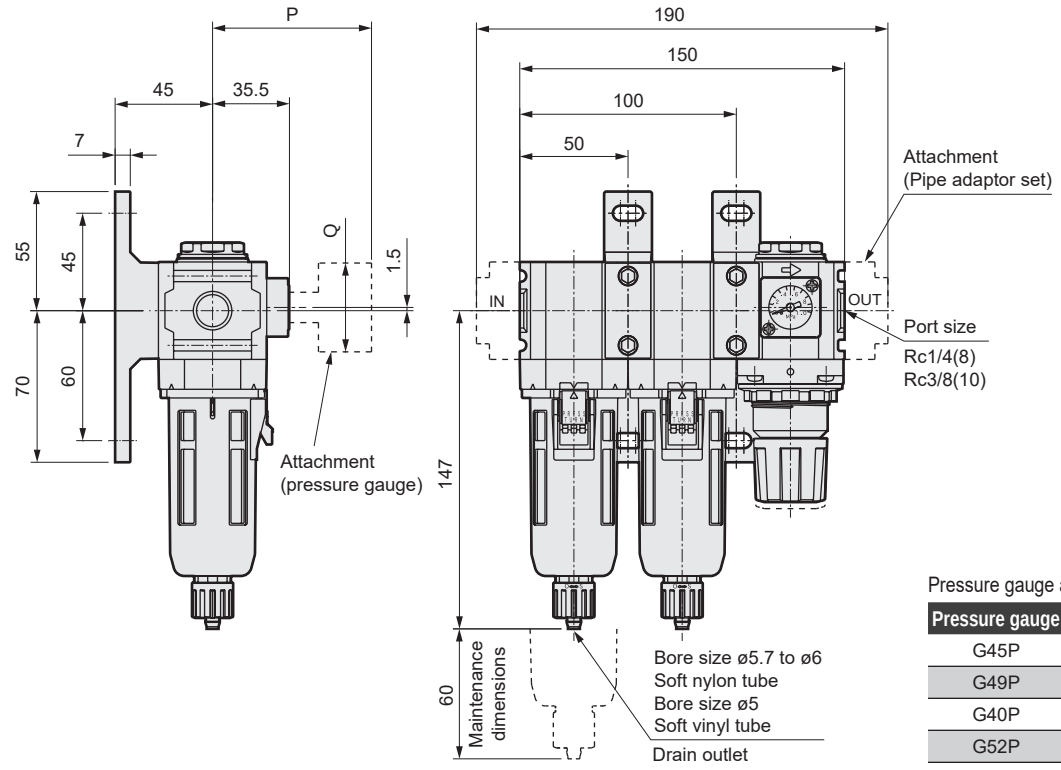

Pressure gauge attached optional dimensions table

Pressure gauge	P	Q
G45P	(73.5)	ø39
G49P	(73)	ø43.5
G40P	(75)	ø42.5
G52P	(85.5)	ø52.5
R2	(73)	□30

Dimensions

● C2530-W

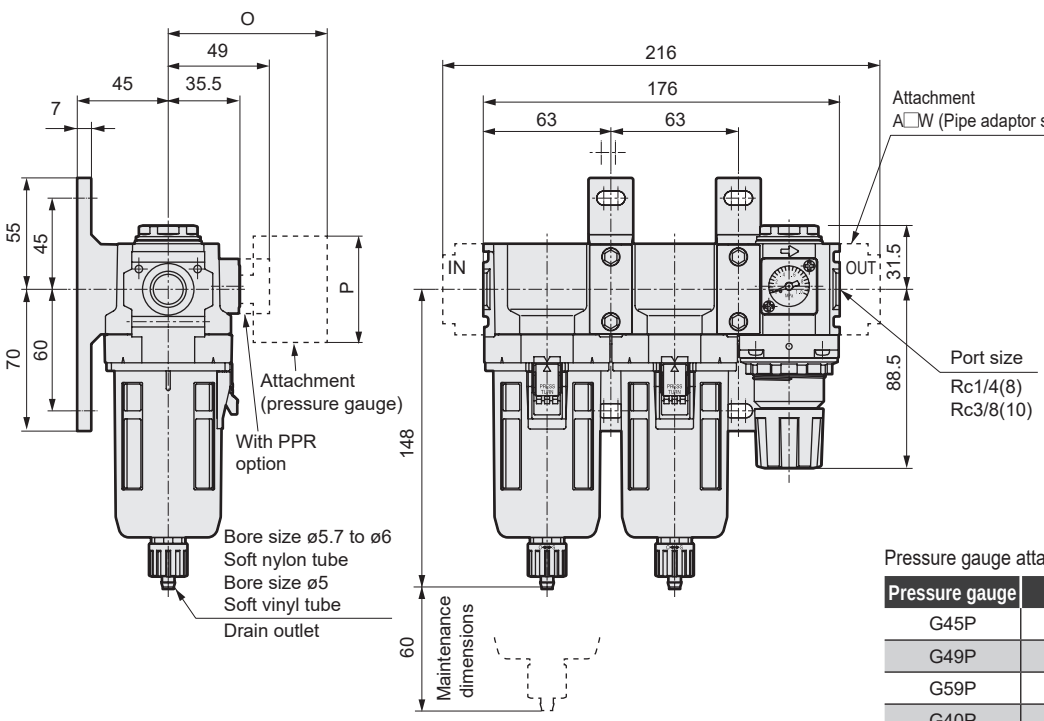

Pressure gauge attached optional dimensions table

Pressure gauge	O	P
G45P	(73.5)	ø39
G49P	(73)	ø43.5
G59P	(75.5)	ø52
G40P	(75)	ø42.5
G52P	(85.5)	ø52.5
R2	(73)	□30

● C3030-W

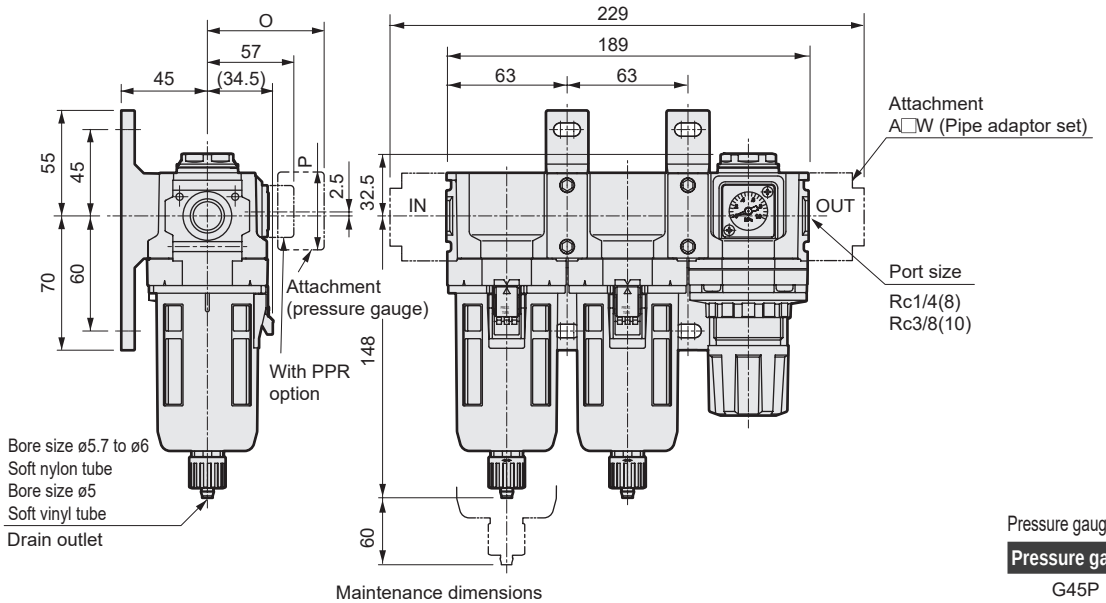

Pressure gauge attached optional dimensions table

Pressure gauge	O	P
G45P	(70)	ø39
G49P	(69.5)	ø43.5
G59P	(72)	ø52
G40P	(71.5)	ø42.5
G52P	(82)	ø52.5
R2	(69.5)	□30

● Refer to page 113 for the dimensions of the metal bowl option filter and page 124 for the oil mist filter.

F.M.R. Combination

Dimensions CAD

● C4030-W

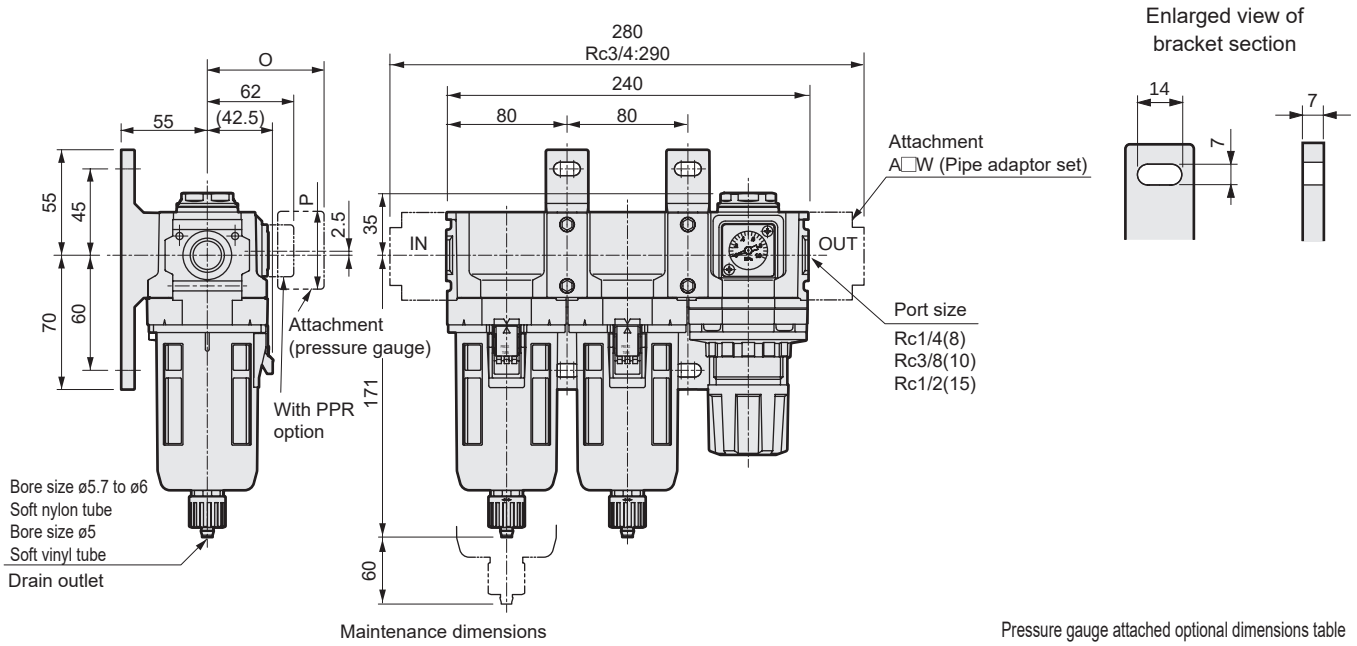

Maintenance dimensions

Pressure gauge attached optional dimensions table

Pressure gauge	O	P
G45P	(75)	ø29
G49P	(74.5)	ø43.5
G59P	(77)	ø52
G40P	(76.5)	ø42.5
G52P	(86)	ø52.5
R2	(75)	□30

● Refer to page 113 for the dimensions of the metal bowl option filter and page 124 for the oil mist filter.

● C6030-W

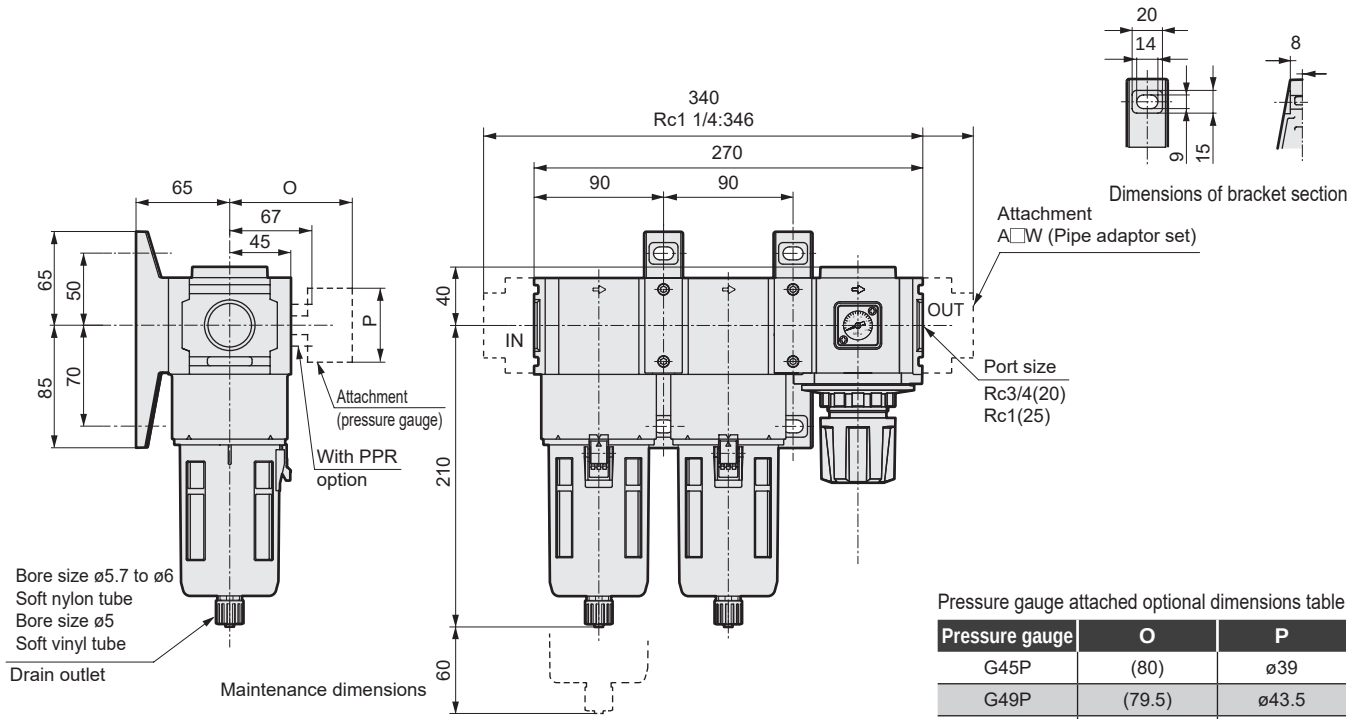

Dimensions of bracket section

Maintenance dimensions

Pressure gauge attached optional dimensions table

Pressure gauge	O	P
G45P	(80)	ø39
G49P	(79.5)	ø43.5
G59P	(82)	ø52
G40P	(81.5)	ø42.5
G52P	(93)	ø52.5
R2	(80)	□30

Dimensions

● C8030-W

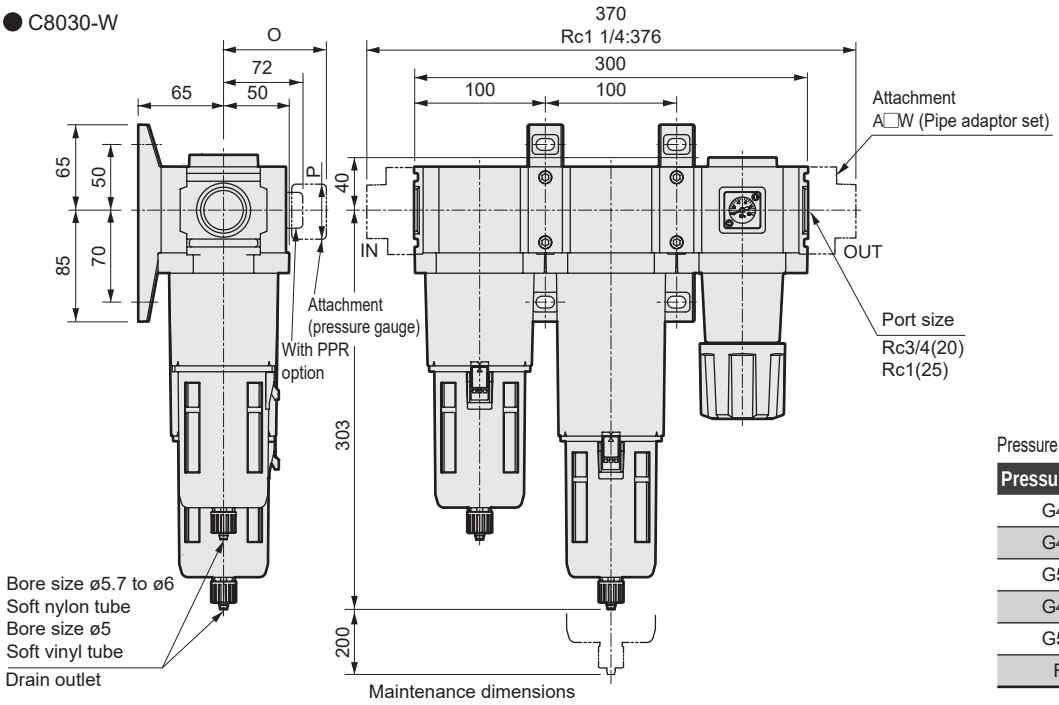

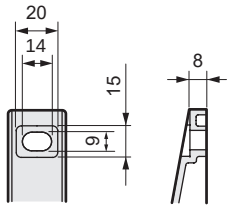

Enlarged view of bracket section

Pressure gauge attached optional dimensions table

Pressure gauge	O	P
G45P	(85)	ø29
G49P	(84.5)	ø43.5
G59P	(87)	ø52
G40P	(86.5)	ø42.5
G52P	(98)	ø52.5
R2	(85)	□30

● Refer to page 113 for the dimensions of the metal bowl option filter and page 124 for the oil mist filter.

Option assembly dimensions

● C1030-W to C8030-W

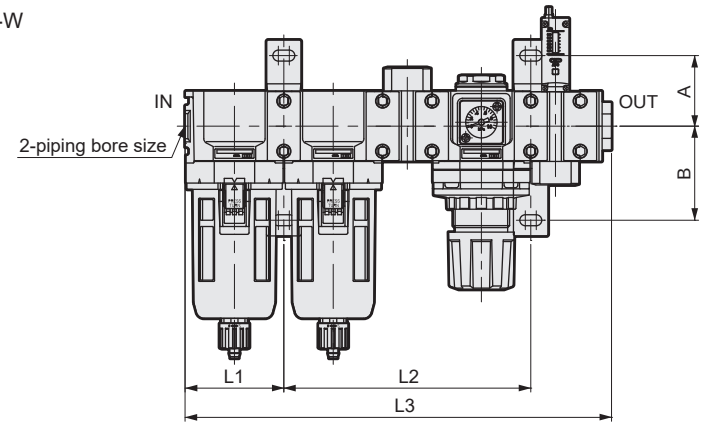

Model No.	A	B
C1030-W	35	45
C2030-W	45	60
C2530-W		
C3030-W		
C4030-W		
C6030-W	50	70
C8030-W		

Assembled option	D			S (*1)			P			V			K			DS (*1)			DP			DV			DK		
Model No.	L1	L2	L3	L1	L2	L3	L1	L2	L3	L1	L2	L3	L1	L2	L3	L1	L2	L3	L1	L2	L3	L1	L2	L3	L1	L2	L3
C1030-W	40	68	148	40	80	169.5	-	-	-	40	80	160	-	-	-	40	108	197.5	-	-	-	40	108	188	-	-	-
C2030-W	50	81.5	181.5	50	100	201.5	50	100	230	50	100	213	50	100	213	50	131.5	233	50	131.5	261.5	50	131.5	244.5	50	131.5	244.5
C2530-W	63	94.5	207.5	63	113	227.5	63	113	256	63	113	239	63	113	239	63	144.5	259	63	144.5	287.5	63	144.5	270.5	63	144.5	270.5
C3030-W	63	94.5	220.5	63	126	240.5	63	126	269	63	126	252	63	126	252	63	157.5	272	63	157.5	300.5	63	157.5	283.5	63	157.5	283.5
C4030-W	80	111.5	271.5	80	160	291.5	80	160	320	80	160	303	80	160	303	80	191.5	323	80	191.5	351.5	80	191.5	334.5	80	191.5	334.5
C4030-20-W *1	100	111.5	311.5	100	160	311.5	100	160	360	100	160	353	100	160	343	100	191.5	343	100	191.5	391.5	100	191.5	374.5	100	191.5	374.5
C6030-W	90	140	320	90	180	355	-	-	-	-	-	-	90	180	360	90	230	405	-	-	-	-	-	-	90	230	410
C8030-W	100	150	350	100	200	385	-	-	-	-	-	-	100	200	390	100	250	435	-	-	-	-	-	-	100	250	440

Assembled option	DSV			DSK			DPV			DPK			SV			SK			PV			PK		
Model No.	L1	L2	L3	L1	L2	L3	L1	L2	L3	L1	L2	L3	L1	L2	L3	L1	L2	L3	L1	L2	L3	L1	L2	L3
C1030-W	40	136	216	-	-	-	-	-	-	-	-	-	40	108	188.0	-	-	-	-	-	-	-	-	-
C2030-W	50	163	276	50	163	276	50	211.5	325	50	211.5	325	50	131.5	244.5	50	131.5	244.5	50	180	293	50	180	293
C2530-W	63	176	302	63	176	302	63	225	351	63	225	351	63	144.5	270.5	63	144.5	270.5	63	193	319	63	193	319
C3030-W	63	189	315	63	189	315	63	238	364	63	238	364	63	157.5	283.5	63	157.5	283.5	63	206	332	63	206	332
C4030-W	80	223	366	80	223	366	80	271.5	414.5	80	271.5	414.5	80	191.5	334.5	80	191.5	334.5	80	240	383	80	240	383
C4030-20-W *1	100	223	406	100	223	406	100	271.5	454.5	100	271.5	454.5	100	191.5	374.5	100	191.5	374.5	100	240	423	100	240	423
C6030-W	-	-	-	90	280	460	-	-	-	-	-	-	-	-	-	90	230	410	-	-	-	-	-	-
C8030-W	-	-	-	100	300	490	-	-	-	-	-	-	-	-	-	100	250	440	-	-	-	-	-	-

L1: Dimensions from the IN edge to center of the T-bracket mounting hole
L2: Spacing dimensions of the mounting hole from the first T-bracket to the second T-bracket
L3: Dimensions from the IN edge to the OUT edge

* Refer to page 346 for details on bracket mounting hole dimensions.
*1: The pipe adaptor is assembled on the OUT side.
As well, the pipe adaptor A400-20-W is assembled on both ends of C4030-20-W.



W.M. combination Standard White Series

C1040/C2040/C3040/C4040/C8040-W Series

Filter/regulator and oil mist filter integrated.

● Port size: 1/8 to 1

JIS symbol 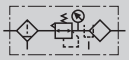

RoHS CAD

Specifications

1 MPa ≈ 145.0 psi, 1 MPa = 10 bar

Item		C1040-W	C2040-W	C3040-W	C4040-W	C8040-W
Appearance						
Comps	Filter/regulator	W1000-W	W2000-W	W3000-W	W4000-W	W8000-W
	Oil mist filter	M1000-W	M2000-W	M3000-W	M4000-W	M8000-W
Working fluid		Compressed air				
Max. working pressure MPa		1.0 (≈150 psi, 10 bar) *3				
Proof pressure MPa		1.5 (≈220 psi, 15 bar)				
Ambient / fluid temperatures °C		5 (41°F) to 60 (140°F)				*2
Set pressure MPa		0.1 to 0.85 *3	0.1 (≈15 psi, 1 bar) to 0.85 (≈120 psi, 8.5 bar) *5, *6			
Pressure relief		With relief mechanism				
Port size Rc,NPT,G		1/8, 1/4 (3/8 uses an adaptor)	1/4, 3/8 (1/2 uses an adaptor)	1/4, 3/8 (1/2 uses an adaptor)	1/4, 3/8, 1/2 (3/4 uses an adaptor)	3/4, 1 (1 1/4 uses an adaptor)
Weight kg		0.31	0.74	0.97	1.52	3.52
Secondary oil concentration		0.01 mg/m^3 or less (0.1 mg/m^3 or less after oil saturation)				
Max. flow rate (*1) m^3/min		0.15	0.25	0.36	0.825	2.6

*1: Max. flow rate is for the regulator set pressure 0.7 MPa. Refer to page 108 for the max. flow rate of element option "Y".
*2: The ambient / fluid temperatures for "RN" or "RP" (pressure switch with display PPR is mounted) and "R2" (digital pressure sensor PPX is attached) is 5 to 50°C.
*3: When using C1040-W Series "F1" with auto-drain, the min. working pressure is 0.2 MPa and max. working pressure is 0.7 MPa. Refer to the max. working flow rate table (page 108) for F1000-W-F1 auto-drain for the max. working flow rate. Set the working flow rate to less than or equal to the max. working flow rate.
*4: Refer to page 116 for details on other oil mist filters.
*5: In the case of "F" with auto-drain, the supply air pressure is 0.2 MPa or more. The minimum set pressure is 0.15 MPa. The supply air pressure of the auto-drain of the filter regulator is 0.1 MPa. Air is purged with initial drain until pressure reaches 0.1 MPa.
*6: In the case of "F1" with auto-drain, the supply air pressure is 0.2 MPa or more. The minimum set pressure is 0.15 MPa.

Option weight

* Add to the weight of the standard accessories.

Unit: kg

Code	Drain discharge				Bowl material		Pressure gauge		Pipe adaptor set						
	F	F1	FF	FF1	M	M1	T*	RN/RP	A6*W	A8*W	A10*W	A15*W	A20*W	A25*W	A32*W
C1040		0.014					0	0.04	0.09	0.09	0.09				
C2040		0.04				0.2	0	0.04		0.16	0.16	0.16			
C3040	0.04	0.04			0.2	0.2	0	0.04		0.16	0.16	0.16			
C4040	0.04	0.04			0.2	0.2	0	0.04		0.16	0.16	0.16	0.16		
C8040	0.04	0.04	0.04	0.04	0.2	0.2	0	0.04					0.53	0.53	0.53

Code	Assembled components				Pressure gauge					
	S	P	V	K	G45P	G49P	G59P	G40P	G52P	R2
C1040	0.15		0.18		0.074	0.086	0.115	0.085	0.15	0.04
C2040	0.23	0.54	0.29	0.34	0.074	0.086		0.085	0.15	0.04
C3040	0.23	0.54	0.29	0.34	0.074	0.086	0.115	0.085	0.15	0.04
C4040	0.23	0.54	0.29	0.34	0.074	0.086	0.115	0.085	0.15	0.04
C8040	0.51			0.34	0.074	0.086	0.115	0.085	0.15	0.04

How to order

C1040 - 6 ○ - W - F1 - U SV - ○ - A6W - ○

Ⓐ Model No.
Ⓑ Port size
Ⓒ Port thread
Ⓓ Option
Ⓔ Assembled components
Ⓕ Display unit *12
Ⓖ Pipe adaptor set (included)
Ⓗ Pressure gauge option (included)

* Refer to page 30 for the explanation of the option.

Code	Description	Ⓐ Model No. C1040	C2040	C3040	C4040	C8040
Ⓑ Port size						
6	1/8	●				
8	1/4	●	●	●	●	
10	3/8		●	●	●	
15	1/2				●	
20	3/4				●*1	●
25	1					●
Ⓒ Port thread						*2
Blank	Rc thread	●	●	●	●	●
N	NPT thread	●	●	●	●	●
G	G thread	●	●	●	●	●
Ⓓ Option						*3
Drain discharge *4, *5 **Blank**	With manual drain cock	●	●	●	●	●
F	Auto-drain with manual override (NO: Exhaust when not pressurized)			●	●	●
F1	Auto-drain with manual override (NC: No exhaust when not pressurized)	●	●	●	●	●
FF	Large auto-drain with manual override (NO: Exhaust when not pressurized)					●
FF1	Large auto-drain with manual override (NC: No exhaust when not pressurized)					●
Bowl material **Blank**	Polycarbonate bowl	●	●	●	●	●
Z	Nylon bowl	●	●	●	●	●
M	Metal bowl			●	●	●
M1	Metal bowl with manual drain cock		●	●	●	●
Element **Blank**	5 µm	●	●	●	●	●
Y	0.3 µm (submicron) *6			●	●	●
Diff press detect **Blank**	Without differential pressure detection port	●	●	●	●	●
Q	With differential pressure detection port (Rc 1/4)					●
Pressure range **Blank**	0.1 to 0.85 MPa	●	●	●	●	●
L	0.1 to 0.35 MPa *7	●	●	●	●	●
Pressure relief **Blank**	With relief mechanism	●	●	●	●	●
N	Non-relief	●	●	●	●	●
Pressure gauge **Blank**	With standard pressure gauge (G401-W)	●	●	●	●	●
T	No pressure gauge (gauge port (1/4) is assembled sealed)	●	●	●	●	●
T8	Pressure gauge ready (gauge port (1/4) is left open)	●	●	●	●	●
T6	Digital pressure sensor PPX included option *8	●	●	●	●	●
RN	Pressure switch with display PPR mounted (NPN output 1 point)	●		●	●	●
RP	Pressure switch with display PPR mounted (PNP output 1 point)	●		●	●	●
Flow direction **Blank**	Standard flow (left → right)	●	●	●	●	●
X1	Reverse flow (right → left)	●	●	●	●	●
Ⓔ Assembled components		**Pages 166 to 171, 182 to 187, 348 and 349**				
Blank	Without assembled component	●	●	●	●	●
U	Assembled component *9	●	●	●	●	●
Assembled component **S**	Pressure switch (P1100-W, 4100-W, 8100-W)	●	●	●	●	●
P	Pressure switch (P4000-W)		●	●	●	
V	Residual pressure exhaust valve (V1000-W, 3000-W)	●	●	●	●	
K	Residual pressure exhaust valve with keyhole (V3010-W, V6010-W)		●	●	●	●
Ⓕ Display unit						
Blank	MPa display (Rc thread), psi display (NPT thread), bar display (G thread)	●	●	●	●	●
J1	MPa display (NPT, G thread)	●	●	●	●	●
Ⓖ Pipe adaptor set (included)						**Page 350 *10**
Blank	Not included	●	●	●	●	●
A6*W	1/8 pipe adaptor set	●				
A8*W	1/4 pipe adaptor set	●	●	●	●	
A10*W	3/8 pipe adaptor set	●	●	●	●	
A15*W	1/2 pipe adaptor set		●	●	●	
A20*W	3/4 pipe adaptor set				●	●
A25*W	1 pipe adaptor set					●
A32*W	1 1/4 pipe adaptor set					●
*** Adaptor thread**						
Blank	Rc thread	●	●	●	●	●
N	NPT thread	●	●	●	●	●
G	G thread	●	●	●	●	●
Ⓗ Pressure gauge option (included)						**Page 363 *11**
Blank	Not included	●	●	●	●	●
G45P	G45D-8-P10(L:G45D-8-P04)	●	●	●	●	●
G49P	G49D-8-P10(L:G49D-8-P04)	●	●	●	●	●
G59P	G59D-8-P10(L:G59D-8-P04)	●		●	●	●
G40P	G40D-8-P10(L:G40D-8-P04)	●	●	●	●	●
G52P	G52D-8-P10(L:G52D-8-P10)	●	●	●	●	●
R2 *8	Digital pressure sensor: PPX-R10N-6M	●	●	●	●	●

Precautions for model No. selection

1: Pipe adaptor A400-20-W is assembled on both ends of C4040-20*-W. A20*W does not need to be selected for the pipe adaptor set.
*2: G threads and NPT threads are available for IN, OUT, gauge port and drain outlet (metal bowl with auto-drain). Attachments P and V are also included.
*3: Select options for the drainage, bowl material, element, differential pressure detection and regulator. When selecting options for several items, list options in order from the top.
*4: Refer to page 354 for the auto-drain usage conditions.
*5: When option code "F" is selected, the NO auto-drain is included with the filter/regulator and the NC auto-drain is included with the oil mist filter. When option code "F1" is selected, the NC auto-drain is included with the filter/regulator oil mist filter. For "FF" and "FF1", only the filter/regulator has a large discharge rate. The oil mist filter is normal NC auto-drain.
*6: Refer to page 108 for max. processing flow rate when option "Y" is selected.
*7: The pressure gauge's indication range is 0 to 0.4 MPa for the option "L".
*8: When option "T6" is selected, only "Blank" or "R2" can be selected for Ⓗ Pressure gauge (included). The digital pressure sensor PPX mounting port (Rc1/8) is left open.
*9: Installation position for assembled components

Code	Attachment Install positions	Compatible model
S or P	W+(S,P)+M	C1040-W to C8040-W ("P" excludes 1000 and 8000 Series)
V or K	W+M+(V,K)	C1040-W to C8040-W ("V" excludes 8000 Series and "K" excludes 1000 Series)

Note) Indicate "U"+"S", "P","V" and "K" when selecting an assembled component.
Use customized combination specifications sheet for any other combination.
*10: The joiner set is enclosed with the pipe adaptor set.
*11: The pressure gauge option (included) can be selected only when Ⓒ Port thread is Rc thread.
*12: Display unit options when selecting NPT threads: If Blank is selected, the pressure unit is psi and the temperature display unit is °F.
When G thread and Blank display unit option are selected, the pressure unit will be bar and the temperature display unit will be °C.
When NPT/G thread and "J1" display unit option are selected, the pressure unit will be MPa and the temperature display unit will be °C.

Dimensions CAD

● C1040-W

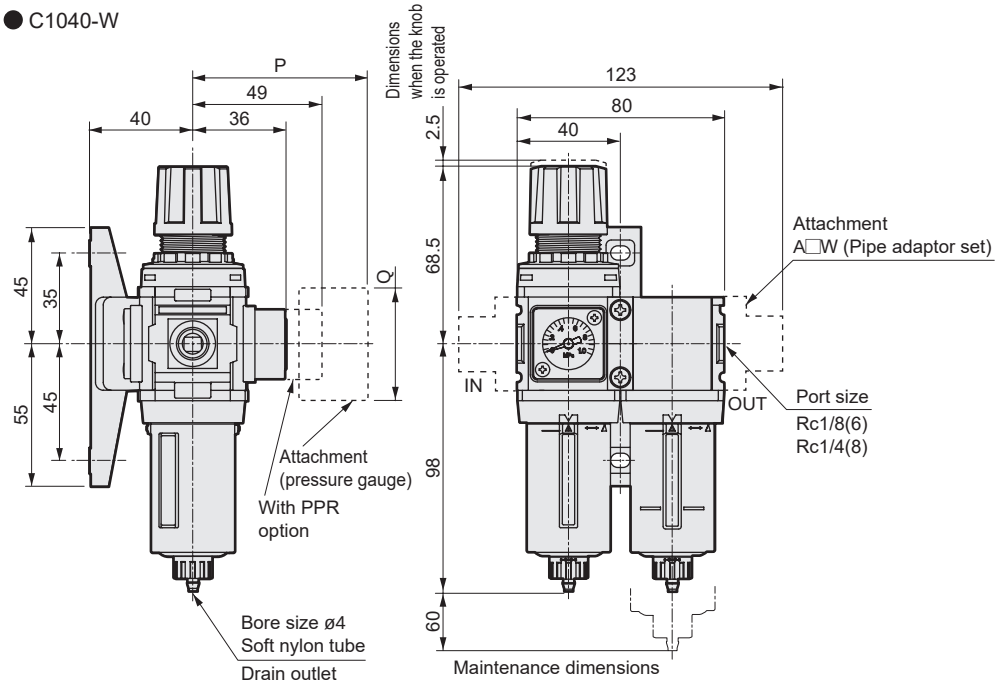

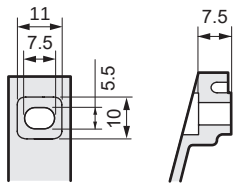

Enlarged view of bracket section

· Optional dimensions
With auto-drain (F1)

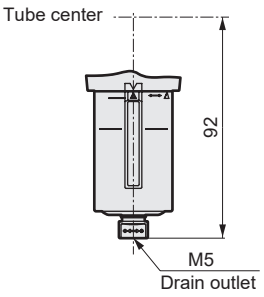

Pressure gauge attached optional dimensions table

Pressure gauge	P	Q
G45P	(74)	ø39
G49P	(73.5)	ø43.5
G59P	(76)	ø52
G40P	(75.5)	ø42.5
G52P	(86)	ø52.5
R2	(74)	□30

● C2040-W

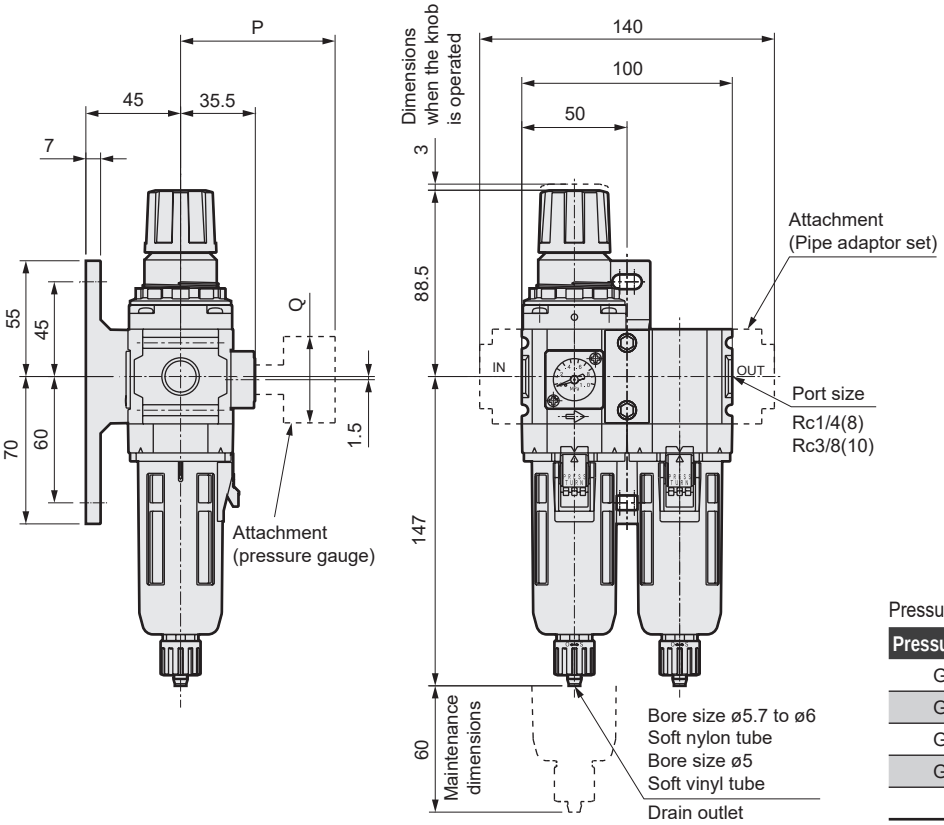

Pressure gauge attached optional dimensions table

Pressure gauge	P	Q
G45P	(73.5)	ø39
G49P	(73)	ø43.5
G40P	(75)	ø42.5
G52P	(85.5)	ø52.5
R2	(73)	□30

Dimensions CAD

● C3040-W

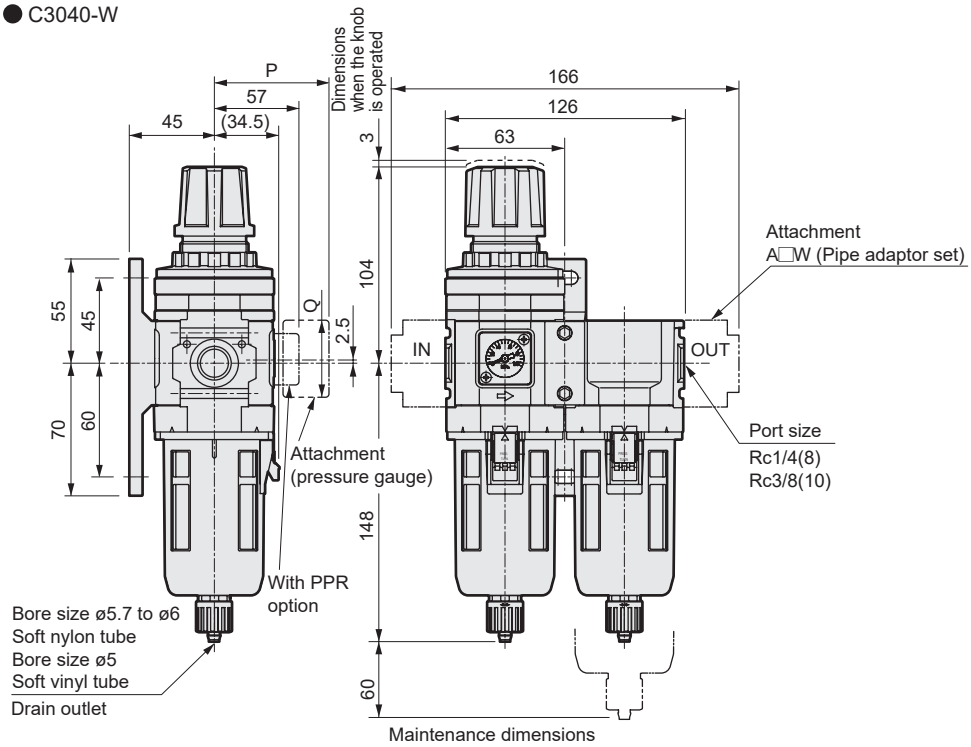

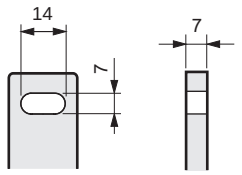

Enlarged view of bracket section

Pressure gauge attached optional dimensions table

Pressure gauge	P	Q
G45P	(70)	ø39
G49P	(69.5)	ø43.5
G59P	(72)	ø52
G40P	(71.5)	ø42.5
G52P	(82)	ø52.5
R2	(69.5)	□30

● Refer to page 96 for the dimensions of the metal bowl option filter/ regulator and page 124 for the oil mist filter.

● C4040-W

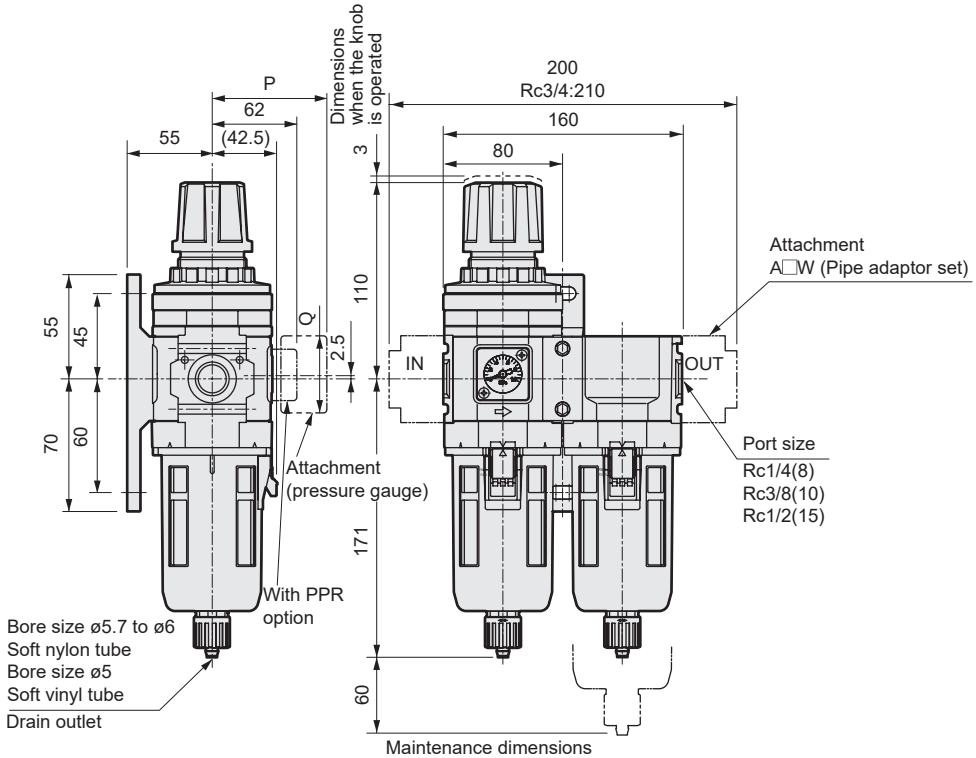

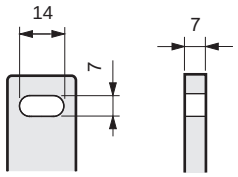

Enlarged view of bracket section

Pressure gauge attached optional dimensions table

Pressure gauge	P	Q
G45P	(75)	ø39
G49P	(74.5)	ø43.5
G59P	(77)	ø52
G40P	(76.5)	ø42.5
G52P	(86)	ø52.5
R2	(75)	□30

● Refer to page 96 for the dimensions of the metal bowl option filter/ regulator and page 124 for the oil mist filter.

W.M. Combination

Dimensions CAD

● C8040-W

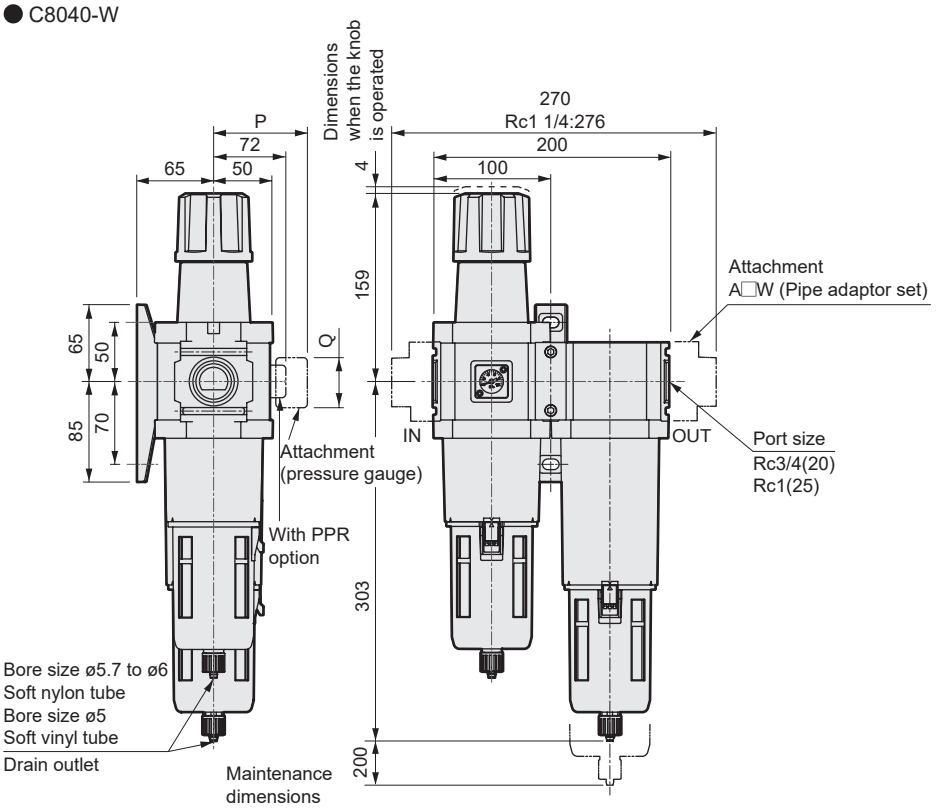

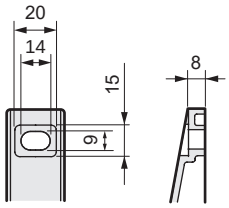

Enlarged view of bracket section

● Refer to page 96 for the dimensions of the metal bowl option filter/ regulator and page 124 for the oil mist filter.

Pressure gauge attached optional dimensions table

Pressure gauge	P	Q
G45P	(85)	ø39
G49P	(84.5)	ø43.5
G59P	(87)	ø52
G40P	(86.5)	ø42.5
G52P	(98)	ø52.5
R2	(85)	□30

Option assembly dimensions

● C1040-W to C8040-W

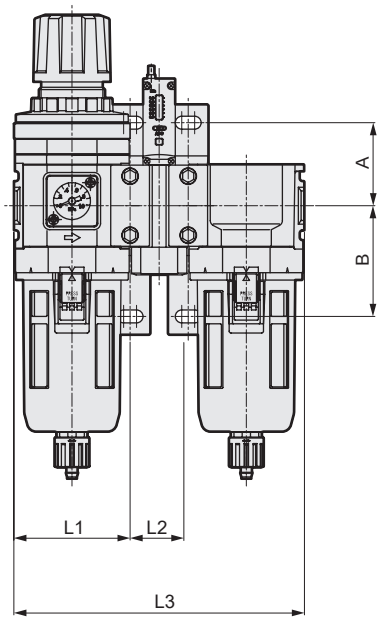

Model No.	A	B
C1040-W	35	45
C2040-W	45	60
C3040-W		
C4040-W		
C8040-W	50	70

Assembled option	S			P			V			K			SV			SK			PV			PK		
Model No.	L1	L2	L3	L1	L2	L3	L1	L2	L3	L1	L2	L3	L1	L2	L3	L1	L2	L3	L1	L2	L3	L1	L2	L3
C1040-W	40	28	108	-	-	-	40	40	120	-	-	-	40	68	148	-	-	-	-	-	-	-	-	-
C2040-W	50	31.5	131.5	50	80	180	50	63	163	50	63	163	50	81.5	194.5	50	81.5	194.5	50	130	243	50	130	243
C3040-W	63	31.5	157.5	63	80	206	63	63	189	63	63	189	63	94.5	220.5	63	94.5	220.5	63	143	269	63	143	269
C4040-W	80	31.5	191.5	80	80	240	80	80	223	80	80	223	80	111.5	254.5	80	111.5	254.5	80	160	320	80	160	320
C4040-20-W *1	100	31.5	231.5	100	80	280	100	100	263	100	100	263	100	111.5	294.5	100	111.5	294.5	100	160	343	100	160	343
C8040-W	100	50	250	-	-	-	-	-	-	100	100	290	-	-	-	100	150	340	-	-	-	-	-	-

L1: Dimensions from the IN edge to center of the T-bracket mounting hole
L2: Spacing dimensions of the mounting hole from the first T-bracket to the second T-bracket
L3: Dimensions from the IN edge to the OUT edge

* Refer to page 346 for details on bracket mounting hole dimensions.
*1: The pipe adaptor is assembled on the OUT side.
As well, the pipe adaptor A400-20-W is assembled on both ends of C4040-20-W.

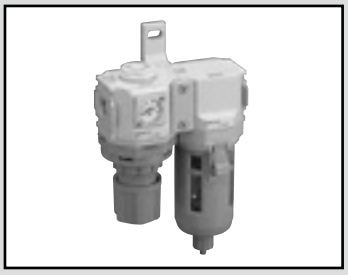

R.M. combination Standard White Series

C1050/C2050/C2550 C3050/C4050/C6050/C8050-W Series

Integrated regulator and oil mist filter

● Port size: 1/8 to 1

JIS symbol 

RoHS CAD

Specifications

1 MPa ≈ 145.0 psi, 1 MPa = 10 bar

Item		C1050-W	C2050-W	C2550-W	C3050-W	C4050-W	C6050-W	C8050-W
Appearance								
Comps	Regulator	R1000-W	R2000-W	R2000-W	R3000-W	R4000-W	R6000-W	R8000-W
	Oil mist filter	M1000-W	M2000-W	M3000-W	M3000-W	M4000-W	M6000-W	M8000-W
Working fluid		Compressed air						
Max. working pressure MPa		1.0 (≈150 psi, 10 bar) *3						
Proof pressure MPa		1.5 (≈220 psi, 15 bar)						
Ambient / fluid temperatures °C		5 (41°F) to 60 (140°F) *2						
Set pressure MPa		0.1 to 0.85 *3	0.1 (≈15 psi, 1 bar) to 0.85 (≈120 psi, 8.5 bar) *4					
Pressure relief		With relief mechanism						
Port size Rc,NPT,G		1/8,1/4 (3/8 uses an adaptor)	1/4,3/8 (1/2 uses an adaptor)	1/4,3/8 (1/2 uses an adaptor)	1/4,3/8 (1/2 uses an adaptor)	1/4,3/8,1/2 (3/4 uses an adaptor)	3/4,1 (1 1/4 uses an adaptor)	3/4,1 (1 1/4 uses an adaptor)
Weight kg		0.29	0.65	0.66	0.82	1.32	2.12	3.12
Secondary oil concentration		0.01 mg/m^3 or less (0.1 mg/m^3 or less after oil saturation)						
Max. flow rate (*1) m^3/min		0.15	0.25	0.36	0.36	0.825	1.27	2.6

*1: Max. flow rate is for the regulator set pressure 0.7 MPa.

*2: The ambient / fluid temperatures for “RN” or “RP” (pressure switch with display PPR is mounted) and “R2” (digital pressure sensor PPX is attached) is 5 to 50°C.

*3: When using C1050-W Series “F1” with auto-drain, the min. working pressure is 0.2 MPa and max. working pressure is 0.7 MPa. Refer to the max. working flow rate table (page 119) for M1000-W-F1 auto-drain for the max. working flow rate. Set the working flow rate to less than or equal to the max. working flow rate.

*4: The supply air pressure is 0.2 MPa and over with a min. set pressure of 0.15 MPa.

*5: Refer to page 116 for details on other oil mist filters.

Option weight

* Add to the weight of the standard accessories.

Unit: kg

Code	Drain discharge				Bowl material		Pressure gauge		Pipe adaptor set			
	F	F1	FF	FF1	M	M1	T*	RN/RP	A6*W	A8*W	A10*W	A15*W
C1050		0.007					0	0.04	0.09	0.09	0.09	
C2050		0.02				0.1	0	0.04		0.16	0.16	0.16
C2550		0.02			0.1	0.1	0	0.04		0.16	0.16	0.16
C3050	0.02	0.02			0.1	0.1	0	0.04		0.16	0.16	0.16
C4050	0.02	0.02			0.1	0.1	0	0.04		0.16	0.16	0.16
C6050	0.02	0.02			0.1	0.1	0	0.04				
C8050	0.02	0.02	0.02	0.02	0.1	0.1	0	0.04				

Code	Pipe adaptor set			Pressure gauge					
	A20*W	A25*W	A32*W	G45P	G49P	G59P	G40P	G52P	R2
C1050				0.074	0.086	0.115	0.085	0.15	0.04
C2050				0.074	0.086		0.085	0.15	0.04
C2550				0.074	0.086	0.115	0.085	0.15	0.04
C3050				0.074	0.086	0.115	0.085	0.15	0.04
C4050	0.16			0.074	0.086	0.115	0.085	0.15	0.04
C6050	0.53	0.53	0.53	0.074	0.086	0.115	0.085	0.15	0.04
C8050	0.53	0.53	0.53	0.074	0.086	0.115	0.085	0.15	0.04

How to order

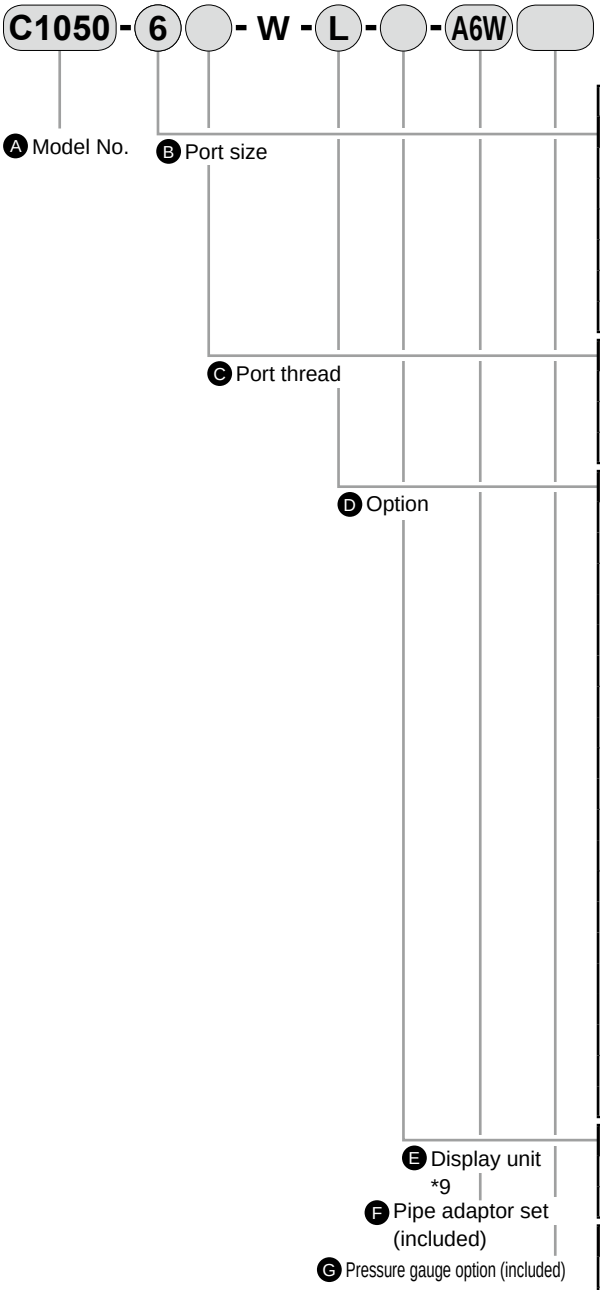

* Refer to page 30 for the explanation of the option.

Code		Description	Ⓐ Model No. C1050	C2050	C2550	C3050	C4050	C6050	C8050
Ⓑ Port size									
6		1/8	●						
8		1/4	●	●	●	●	●		
10		3/8		●	●	●	●		
15		1/2					●		
20		3/4					●*1	●	●
25		1						●	●
Ⓒ Port thread									*2
Blank		Rc thread	●	●	●	●	●	●	●
N		NPT thread	●	●	●	●	●	●	●
G		G thread	●	●	●	●	●	●	●
Ⓓ Option									*3
Drain discharge *4	**Blank**	Filter with manual drain cock	●	●	●	●	●	●	●
	F1	Auto-drain, man OVRD (NC: no press→no exhaust)	●	●	●	●	●	●	●
Bowl material	**Blank**	Polycarbonate bowl	●	●	●	●	●	●	●
	Z	Nylon bowl	●	●	●	●	●	●	●
	M	Metal bowl			●	●	●	●	●
	M1	Metal bowl with manual drain cock		●	●	●	●	●	●
Diff press detect	**Blank**	Without differential pressure detection port	●	●	●	●	●	●	●
	Q	With differential pressure detection port (Rc 1/4)						●	●
Pressure range	**Blank**	0.1 to 0.85 MPa	●	●	●	●	●	●	●
	L	0.1 to 0.35 MPa *5	●	●	●	●	●	●	●
Pressure relief	**Blank**	With relief mechanism	●	●	●	●	●	●	●
	N	Non-relief	●	●	●	●	●	●	●
Pressure gauge	**Blank**	With standard pressure gauge (G401-W)	●	●	●	●	●	●	●
	T	No pressure gauge (gauge port (1/4) is assembled sealed)	●	●	●	●	●	●	●
	T8	Pressure gauge ready (gauge port (1/4) is left open)	●	●	●	●	●	●	●
	T6	Digital pressure sensor PPX included option *6	●	●	●	●	●	●	●
	RN	Pressure switch with display PPR mounted (NPN output 1 point)	●		●	●	●	●	●
	RP	Pressure switch with display PPR mounted (PNP output 1 point)	●		●	●	●	●	●
Flow direction	**Blank**	Standard flow (left → right)	●	●	●	●	●	●	●
	X1	Reverse flow (right → left)	●	●	●	●	●	●	●
Ⓔ Display unit									
Blank		MPa display (Rc thread), psi display (NPT thread), bar display (G thread)	●	●	●	●	●	●	●
J1		MPa display (NPT, G thread)	●	●	●	●	●	●	●
Ⓕ Pipe adaptor set (included)								Page 350	*7
Blank		Not included	●	●	●	●	●	●	●
A6*W		1/8 pipe adaptor set	●						
A8*W		1/4 pipe adaptor set	●	●	●	●	●		
A10*W		3/8 pipe adaptor set	●	●	●	●	●		
A15*W		1/2 pipe adaptor set		●	●	●	●		
A20*W		3/4 pipe adaptor set					●	●	●
A25*W		1 pipe adaptor set						●	●
A32*W		1 1/4 pipe adaptor set						●	●
*** Adaptor thread**									
Blank		Rc thread	●	●	●	●	●	●	●
N		NPT thread	●	●	●	●	●	●	●
G		G thread	●	●	●	●	●	●	●
Ⓖ Pressure gauge option (included)								Page 363	*8
Blank		Not included	●	●	●	●	●	●	●
G45P		G45D-8-P10(L:G45D-8-P04)	●	●	●	●	●	●	●
G49P		G49D-8-P10(L:G49D-8-P04)	●	●	●	●	●	●	●
G59P		G59D-8-P10(L:G59D-8-P04)	●		●	●	●	●	●
G40P		G40D-8-P10(L:G40D-8-P04)	●	●	●	●	●	●	●
G52P		G52D-8-P10(L:G52D-8-P10)	●	●	●	●	●	●	●
R2 *6		Digital pressure sensor: PPX-R10N-6M	●	●	●	●	●	●	●

⚠ Precautions for model No. selection

1: Pipe adaptor A400-20-W is assembled on both ends of C4050-20*-W. A20*W does not need to be selected for the pipe adaptor set.
*2: G threads and NPT threads are available for IN, OUT, gauge port and drain outlet (metal bowl with auto-drain).
*3: Select options for the drainage, bowl material, element, differential pressure detection and regulator. When selecting options for several items, list options in order from the top.
*4: Refer to page 354 for the auto-drain usage conditions.
*5: The pressure gauge indication range of option "L" is 0 to 0.4 MPa.
*6: When option "T6" is selected, only "Blank" or "R2" can be selected for ⓗPressure gauge (included). The digital pressure sensor PPX mounting port (Rc1/8) is left open.
*7: The joiner set is enclosed with the pipe adaptor set.
*8: The pressure gauge option (included) can be selected only when Ⓒ Port thread is Rc thread.
*9: Display unit options when selecting NPT threads: If Blank is selected, the pressure unit is psi and the temperature display unit is °F.
When G thread and Blank display unit option are selected, the pressure unit will be bar and the temperature display unit will be °C.
When NPT/G thread and "J1" display unit option are selected, the pressure unit will be MPa and the temperature display unit will be °C.

Dimensions CAD

● C1050-W

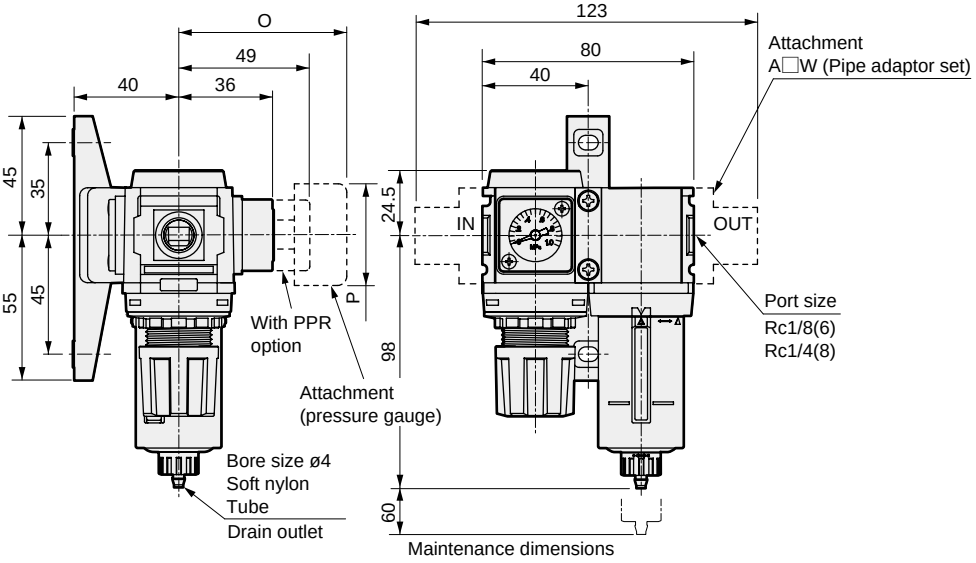

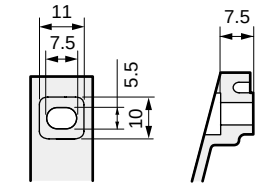

Enlarged view of bracket section

· Optional dimensions
With auto-drain (F1)

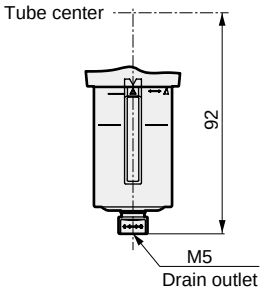

Pressure gauge attached optional dimensions table

Pressure gauge	O	P
G45P	(74)	ø39
G49P	(73.5)	ø43.5
G59P	(76)	ø52
G40P	(75.5)	ø42.5
G52P	(86)	ø52.5
R2	(74)	□30

● C2050-W

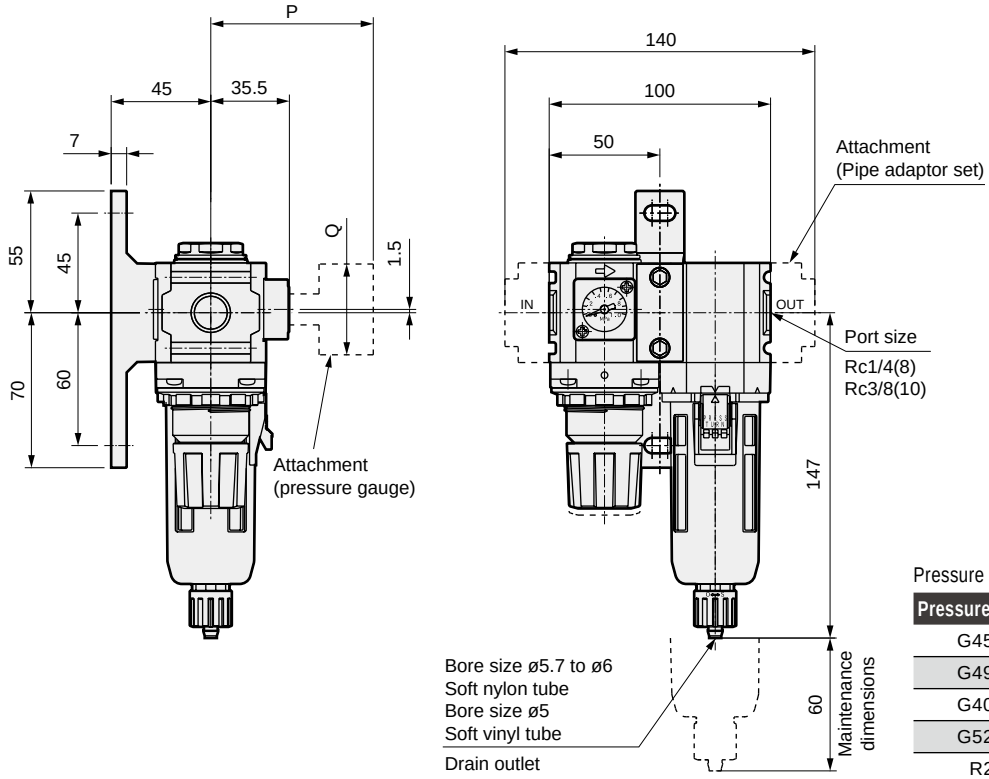

Pressure gauge attached optional dimensions table

Pressure gauge	P	Q
G45P	(73.5)	ø39
G49P	(73)	ø43.5
G40P	(75)	ø42.5
G52P	(85.5)	ø52.5
R2	(73)	□30

Dimensions

● C2550-W

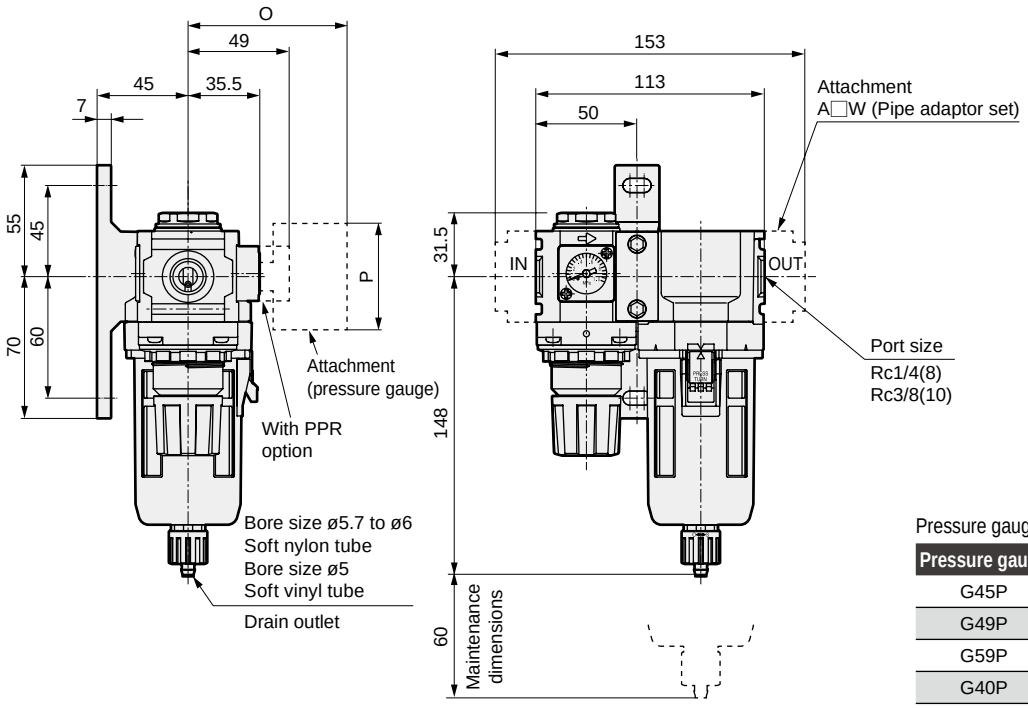

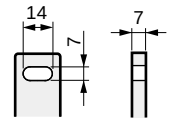

Dimensions of
bracket section

Pressure gauge attached optional dimensions table

Pressure gauge	O	P
G45P	(73.5)	ø39
G49P	(73)	ø43.5
G59P	(75.5)	ø52
G40P	(75)	ø42.5
G52P	(85.5)	ø52.5
R2	(73)	□30

● C3050-W

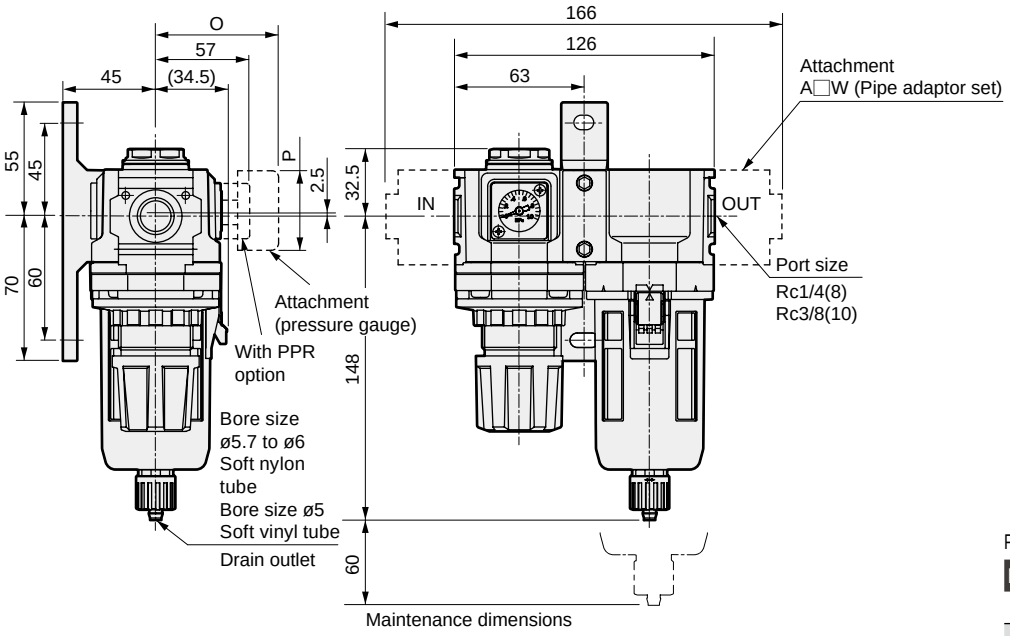

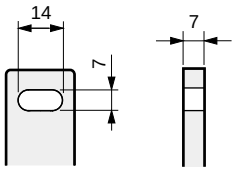

Enlarged view of
bracket section

Pressure gauge attached optional dimensions table

Pressure gauge	O	P
G45P	(70)	ø39
G49P	(69.5)	ø43.5
G59P	(72)	ø52
G40P	(71.5)	ø42.5
G52P	(82)	ø52.5
R2	(69.5)	□30

● Refer to page 124 for the optional dimensions of the metal bowl.

R.M. Combination

Dimensions CAD

● C4050-W

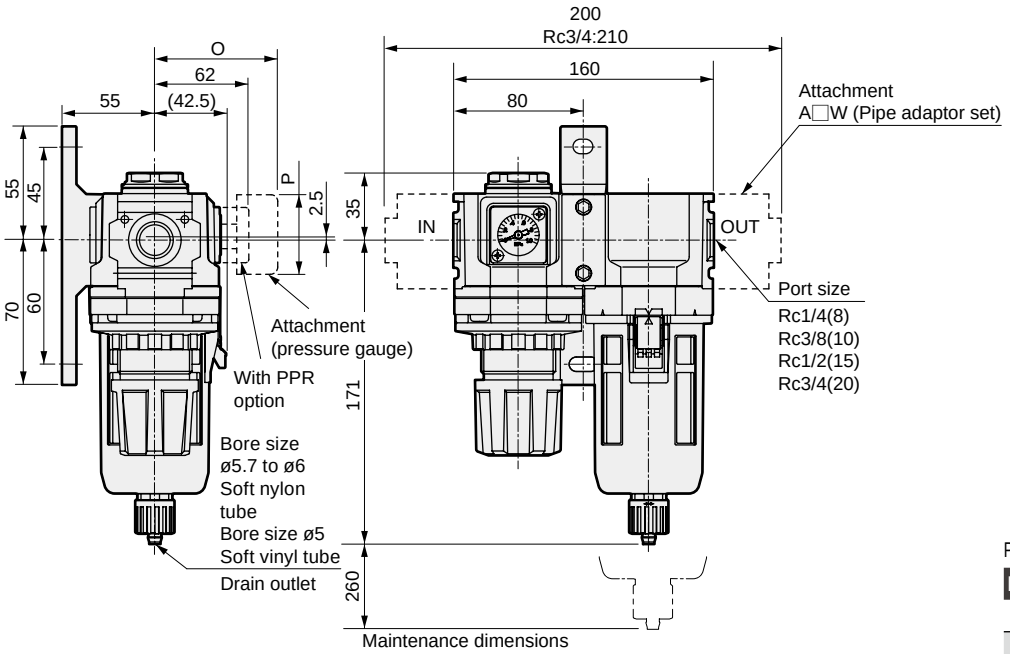

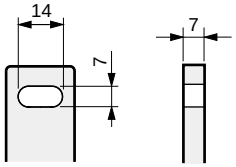

Enlarged view of bracket section

Pressure gauge attached optional dimensions table

Pressure gauge	O	P
G45P	(75)	ø39
G49P	(74.5)	ø43.5
G59P	(77)	ø52
G40P	(76.5)	ø42.5
G52P	(86)	ø52.5
R2	(75)	□30

● Refer to page 124 for the optional dimensions of the metal bowl.

● C6050-W

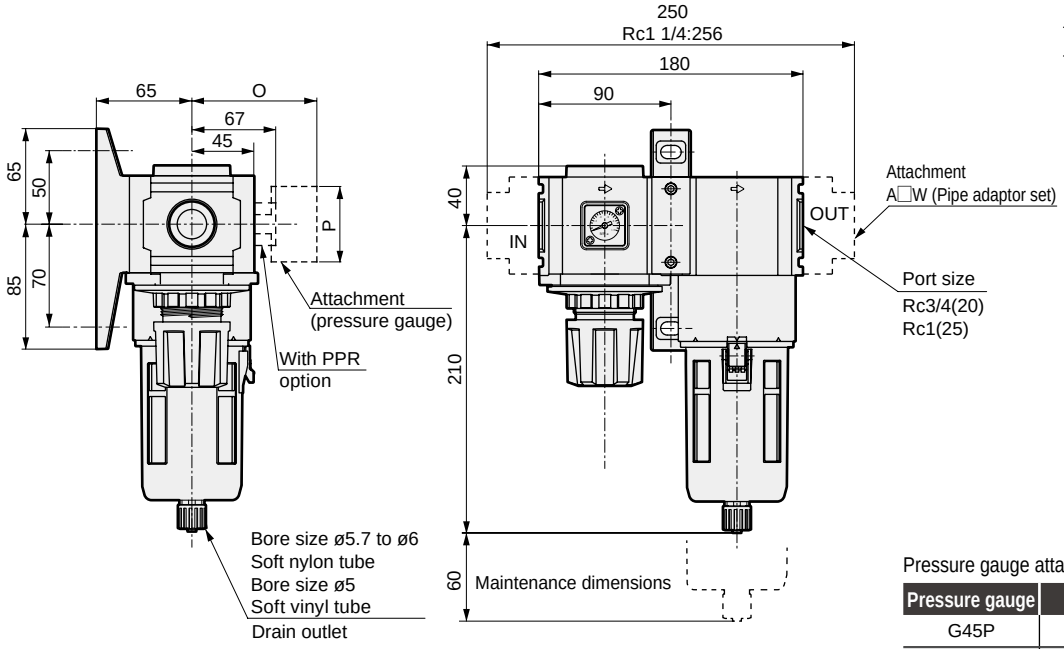

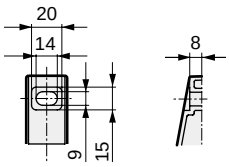

Enlarged view of bracket section

Pressure gauge attached optional dimensions table

Pressure gauge	O	P
G45P	(80)	ø39
G49P	(79.5)	ø43.5
G59P	(82)	ø52
G40P	(81.5)	ø42.5
G52P	(93)	ø52.5
R2	(80)	□30

Dimensions

● C8050-W

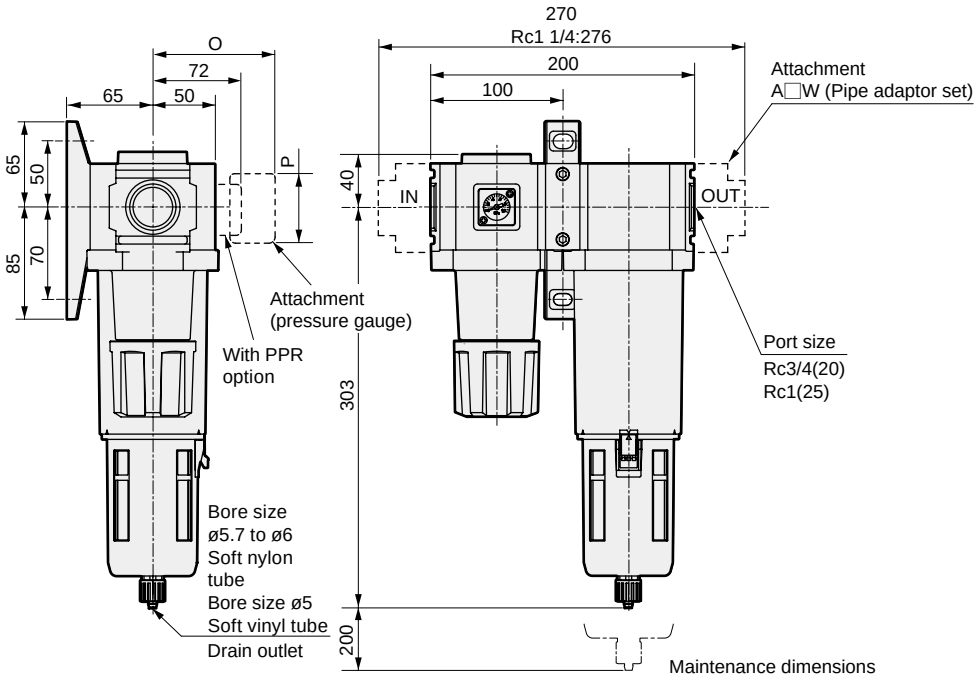

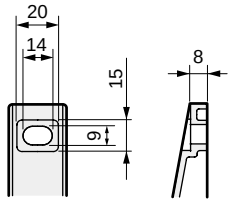

Enlarged view of bracket section

Pressure gauge attached optional dimensions table

Pressure gauge	O	P
G45P	(85)	ø39
G49P	(84.5)	ø43.5
G59P	(87)	ø52
G40P	(86.5)	ø42.5
G52P	(98)	ø52.5
R2	(85)	□30

● Refer to page 124 for the optional dimensions of the metal bowl.

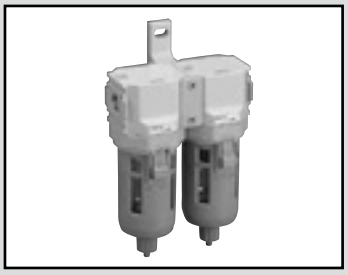

F.M. combination Standard White Series

C1060/C2060/C3060/ C4060/C6060/C8060-W Series

Filter and oil mist filter integrated.

● Port size: 1/8 to 1

JIS symbol 

RoHS CAD

Specifications

Item		C1060-W	C2060-W	C3060-W	C4060-W	C6060-W	C8060-W
Appearance							
Comps	Filter	F1000-W	F2000-W	F3000-W	F4000-W	F6000-W	F8000-W
	Oil mist filter	M1000-W	M2000-W	M3000-W	M4000-W	M6000-W	M8000-W
Working fluid		Compressed air					
Max. working pressure MPa		1.0 (≈150 psi, 10 bar) *3, 4, 5					
Proof pressure MPa		1.5 (≈220 psi, 15 bar) *3					
Ambient / fluid temperatures °C		5 (41°F) to 60 (140°F)					
Port size Rc,NPT,G		1/8, 1/4 (3/8 uses an adaptor)	1/4, 3/8 (1/2 uses an adaptor)	1/4, 3/8 (1/2 uses an adaptor)	1/4, 3/8, 1/2 (3/4 uses an adaptor)	3/4, 1 (1 1/4 uses an adaptor)	3/4, 1 (1 1/4 uses an adaptor)
Weight kg		0.22	0.58	0.62	1.06	2.02	2.68
Secondary oil concentration		0.01 mg/m^3 or less (0.1 mg/m^3 or less after oil saturation)					
Max. flow rate (*1, *2) m^3/min		0.15 *3	0.25	0.36	0.825	1.27	2.6

*1: The max. flow is for a primary pressure of 0.7 MPa.

*2: When element option "Y" is selected, refer to page 108 for max. flow rate. The working flow must be less than the max. working flow.

*3: When "F1" with auto-drain is selected, the NC auto-drain is provided with both the filter and oil mist filter. The min. working pressure is 0.2 MPa, the max. working pressure is 0.7 MPa and the proof pressure is 1.05 MPa. For the max. working flow rate, refer to the max. working processing flow rate table of M1000-W-F1 with auto-drain (page 119). The working flow must be less than the max. working flow.

*4: In the case of "F" with auto-drain, the supply air pressure is 0.15 MPa or more. For the air filter auto-drain, air is purged with the initial drainage until pressure reaches 0.1 MPa.

*5: In the case of "F1" with auto-drain, the required supply air pressure is 0.15 MPa or more.

*6: Refer to page 116 for details on other oil mist filters.

Option weight

* Add to the weight of the standard accessories.

Unit: kg

Code	Drain discharge				Bowl material		Pipe adaptor set						
	F	F1	FF	FF1	M	M1	A6*W	A8*W	A10*W	A15*W	A20*W	A25*W	A32*W
C1060		0.014					0.09	0.09	0.09				
C2060		0.04				0.2		0.16	0.16	0.16			
C3060	0.04	0.04			0.2	0.2		0.16	0.16	0.16			
C4060	0.04	0.04			0.2	0.2		0.16	0.16	0.16			
C6060	0.04	0.04			0.2	0.2					0.53	0.53	0.53
C8060	0.04	0.04	0.04	0.04	0.2	0.2					0.53	0.53	0.53

How to order

C1060 - 6 ○ - W - Z - ○ - A6W

- Ⓐ Model No.
- Ⓑ Port size
- Ⓒ Port thread
- Ⓓ Option
- Ⓔ Display unit
- Ⓕ Pipe adaptor set (included)

* Refer to page 30 for the explanation of the option.

Code		Description	Ⓐ Model No. C1060	C2060	C3060	C4060	C6060	C8060
Ⓑ Port size								
6		1/8	●					
8		1/4	●	●	●	●		
10		3/8		●	●	●		
15		1/2				●		
20		3/4				●*1	●	●
25		1					●	●
Ⓒ Port thread								*2
Blank		Rc thread	●	●	●	●	●	●
N		NPT thread	●	●	●	●	●	●
G		G thread	●	●	●	●	●	●
Ⓓ Option								*3
Drain discharge *4, *5	**Blank**	With manual drain cock	●	●	●	●	●	●
	F	Auto-drain, man OVRD (NO: no press→Exhaust)			●	●	●	●
	F1	Auto-drain, man OVRD (NC: no press→no exhaust)	●	●	●	●	●	●
	FF	Large auto-drain, man OVRD (NO: no press→Exhaust)						●
	FF1	Large auto-drain, man OVRD (NC: no press→no exhaust)						●
Bowl material	**Blank**	Polycarbonate bowl	●	●	●	●	●	●
	Z	Nylon bowl	●	●	●	●	●	●
	M	Metal bowl			●	●	●	●
	M1	Metal bowl with manual drain cock		●	●	●	●	●
Element	**Blank**	5 µm	●	●	●	●	●	●
	Y	0.3 µm (submicron) *6			●	●	●	●
Diff press detect	**Blank**	Without differential pressure detection port	●	●	●	●	●	●
	Q	With differential pressure detection port (Rc 1/4)					●	●
Flow direction	**Blank**	Standard flow (left → right)	●	●	●	●	●	●
	X1	Reverse flow (right → left)	●	●	●	●	●	●
Ⓔ Display unit								
Blank		MPa display (Rc thread), psi display (NPT thread), bar display (G thread)	●	●	●	●	●	●
J1		MPa display (NPT, G thread)	●	●	●	●	●	●
Ⓕ Pipe adaptor set (included)							Page 350	*7
Blank		Not included	●	●	●	●	●	●
A6*W		1/8 pipe adaptor set	●					
A8*W		1/4 pipe adaptor set	●	●	●	●		
A10*W		3/8 pipe adaptor set	●	●	●	●		
A15*W		1/2 pipe adaptor set		●	●	●		
A20*W		3/4 pipe adaptor set					●	●
A25*W		1 pipe adaptor set					●	●
A32*W		1 1/4 pipe adaptor set					●	●
*** Adaptor thread**								
Blank		Rc thread	●	●	●	●	●	●
N		NPT thread	●	●	●	●	●	●
G		G thread	●	●	●	●	●	●

⚠ Precautions for model No. selection

1: Pipe adaptor A400-20-W is assembled on both ends of C4060-20*-W. A20*W does not need to be selected for the pipe adaptor set.
*2: G threads and NPT threads are available for IN, OUT and drain outlet (metal bowl with auto-drain).
*3: Select options for the drainage, bowl material, element and differential pressure detection. When selecting options for several items, list options in order from the top.
*4: Refer to page 354 for the auto-drain usage conditions.
*5: When option code “F” is selected, the NO auto-drain is supplied with the air filter and the NC auto-drain is supplied with the oil mist filter. When option code “F1” is selected, the NC auto-drain is included with the air filter and oil mist filter. For “FF” and “FF1”, only the filter has a large discharge rate. The oil mist filter is normal NC auto-drain.
*6: Refer to page 108 for max. processing flow rate when option “Y” is selected.
*7: The joiner set is enclosed with the pipe adaptor set.

Dimensions CAD

● C1060-W

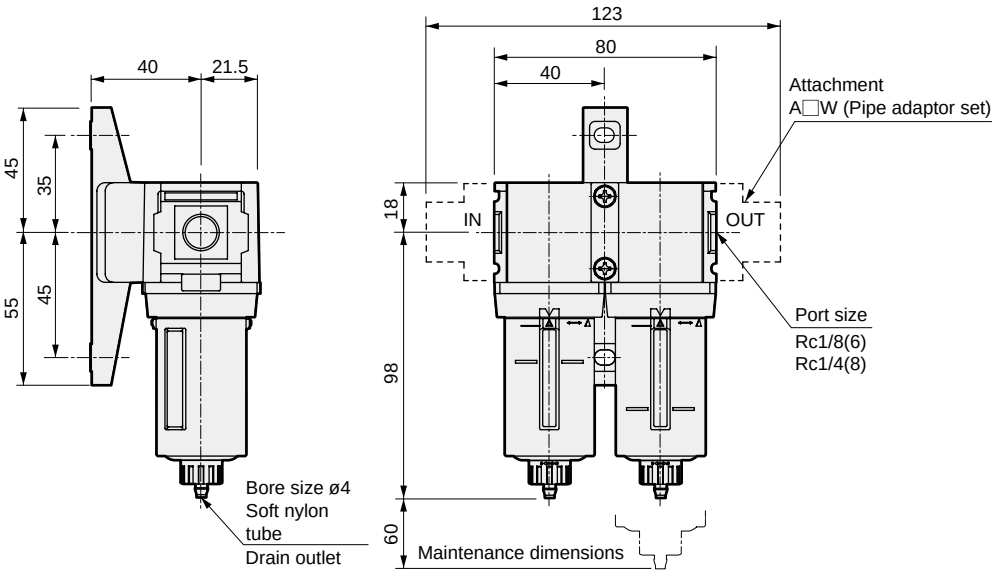

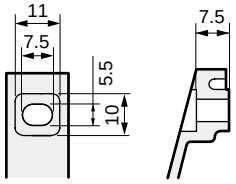

Enlarged view of bracket section

· Optional dimensions
With auto-drain (F1)

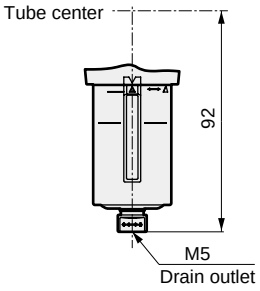

● C2060-W

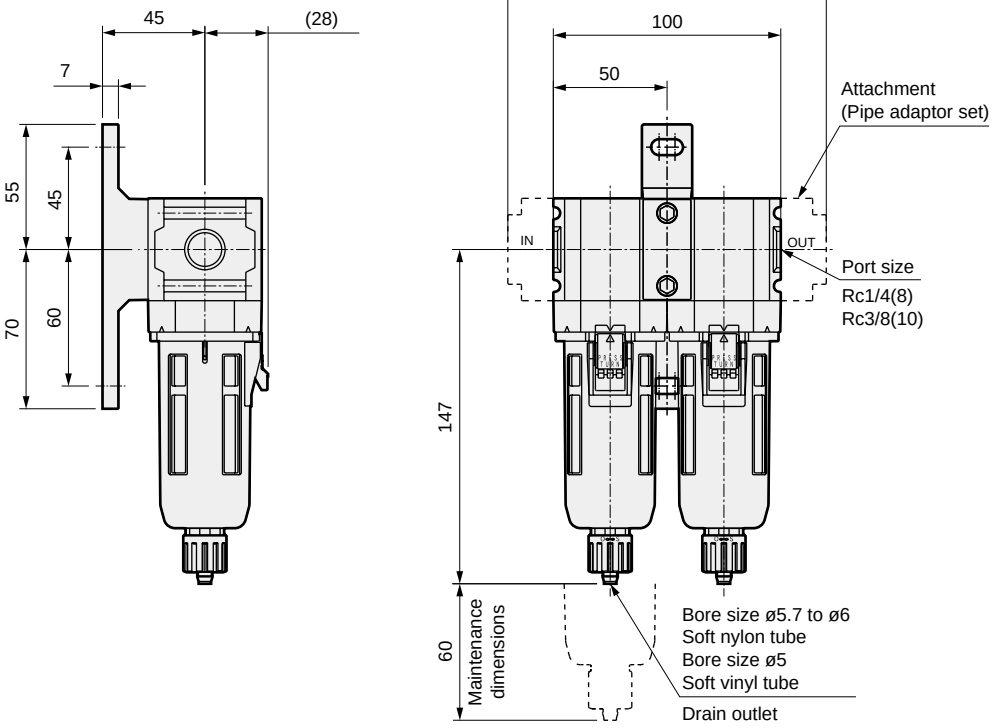

Dimensions

● C3060-W

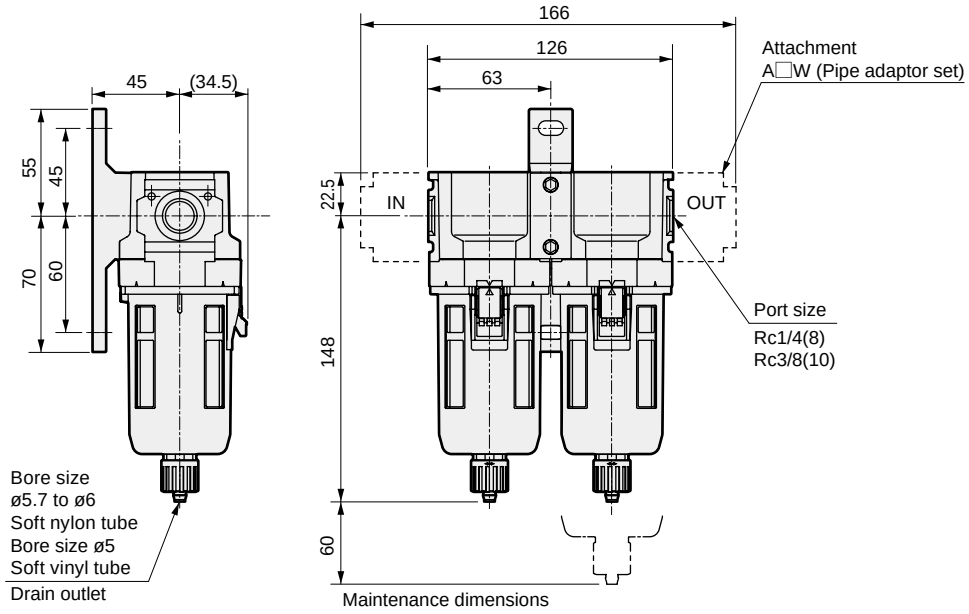

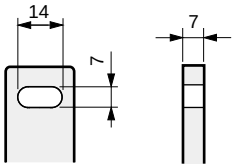

Enlarged view of bracket section

● Refer to page 113 for the dimensions of the metal bowl option filter and page 124 for the oil mist filter.

● C4060-W

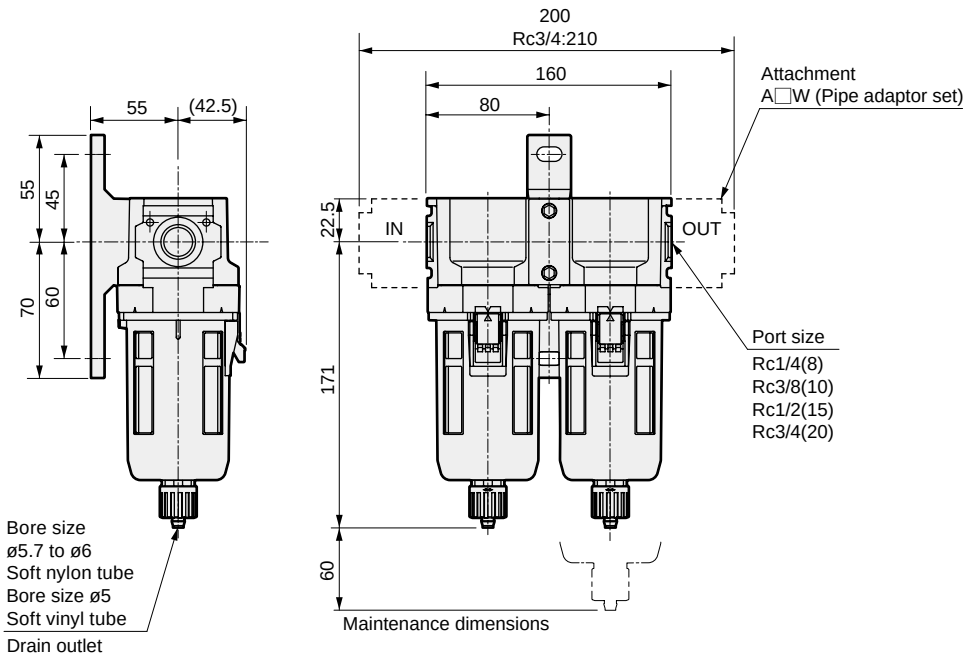

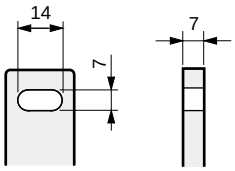

Enlarged view of bracket section

● Refer to page 113 for the dimensions of the metal bowl option filter and page 124 for the oil mist filter.

F.M. Combination

Dimensions CAD

● C6060-W

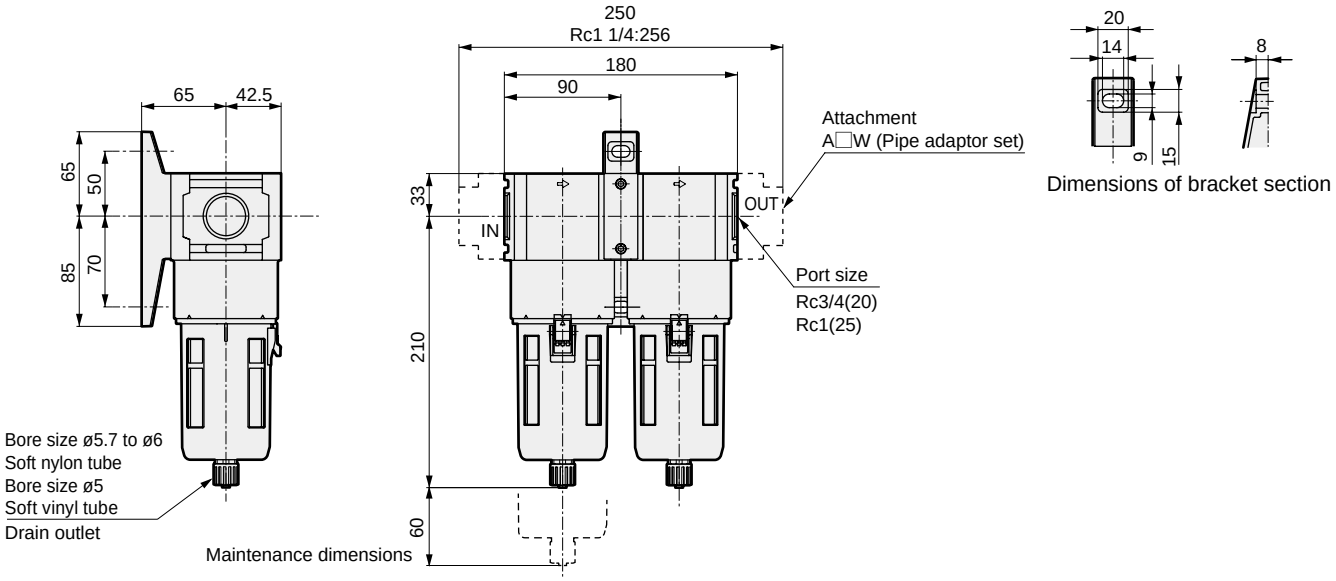

● Refer to page 113 for the dimensions of the metal bowl option filter and page 124 for the oil mist filter.

● C8060-W

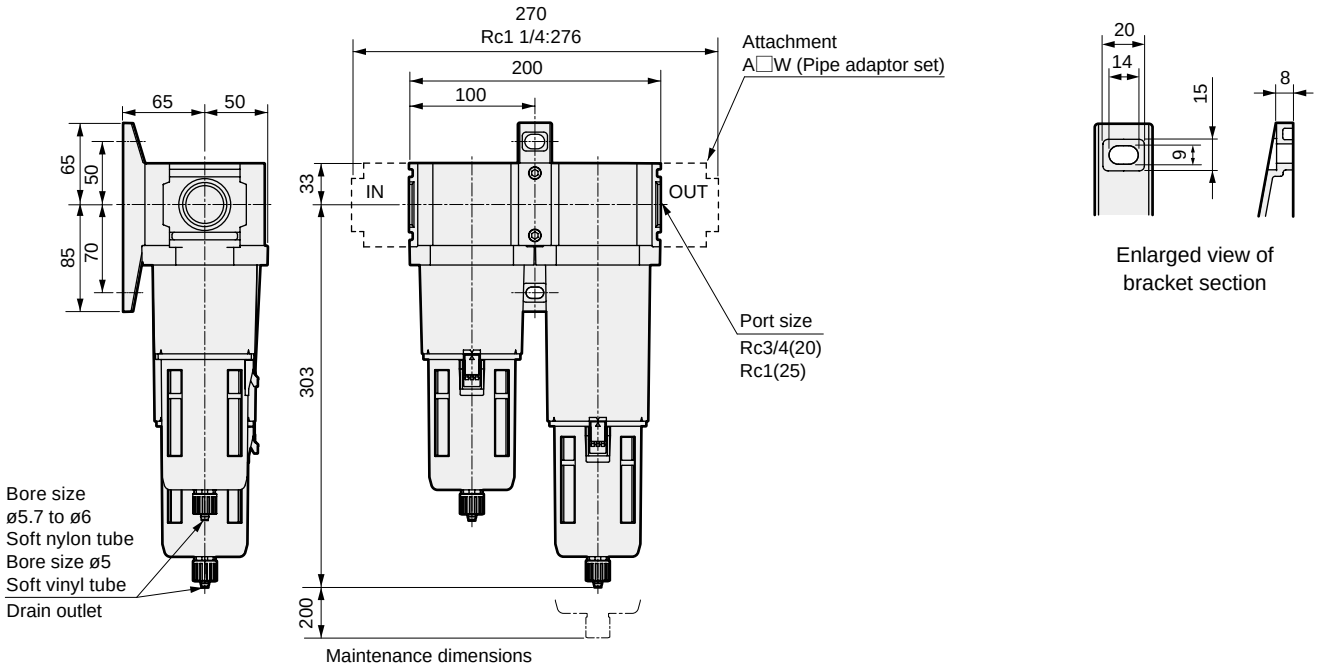

● Refer to page 113 for the dimensions of the metal bowl option filter and page 124 for the oil mist filter.

MEMO

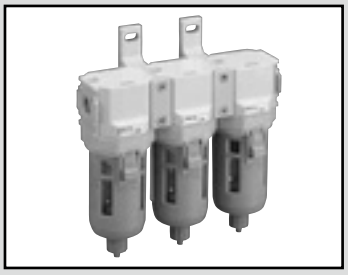

F.F.M. combination Standard White Series

C3070/C4070/C6070/C8070-W Series

5µm filter, 0.3µm filter and oil mist filter integrated.

● Port size: 1/4 to 1

JIS symbol 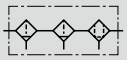

RoHS CAD

Specifications

Item		C3070-W	C4070-W	C6070-W	C8070-W
Appearance					
Comps	Filter (5 µm)	F3000-W	F4000-W	F6000-W	F8000-W
	Filter (0.3 µm)	F3000-W	F4000-W	F6000-W	F8000-W
	Oil mist filter	M3000-W	M4000-W	M6000-W	M8000-W
Working fluid		Compressed air			
Max. working pressure MPa		1.0 (≈150 psi, 10 bar) *2, 3			
Proof pressure MPa		1.5 (≈220 psi, 15 bar)			
Ambient / fluid temperatures °C		5 (41°F) to 60 (140°F)			
Port size Rc,NPT,G		1/4, 3/8 (1/2 uses an adaptor)	1/4, 3/8, 1/2 (3/4 uses an adaptor)	3/4, 1 (1 1/4 uses an adaptor)	3/4, 1 (1 1/4 uses an adaptor)
Weight kg		0.96	1.61	3.09	4.01
Secondary oil concentration		0.01 mg/m^3 or less (0.1 mg/m^3 or less after oil saturation)			
Max. flow rate (*1) m^3/min		0.23	0.5	0.8	1.1

*1: The max. flow is for a primary pressure of 0.7 MPa.
*2: In the case of "F" with auto-drain, the supply air pressure is 0.15 MPa or more. For the air filter auto-drain, air is purged with the initial drainage until pressure reaches 0.1 MPa.
*3: In the case of "F1" with auto-drain, the required supply air pressure is 0.15 MPa or more.
*4: Refer to page 116 for details on other oil mist filters.

Option weight

* Add to the weight of the standard accessories.

Unit: kg

Code	Drain discharge				Bowl material		Pipe adaptor set					
	F	F1	FF	FF1	M	M1	A8*W	A10*W	A15*W	A20*W	A25*W	A32*W
C3070	0.06	0.06			0.3	0.3	0.16	0.16	0.16			
C4070	0.06	0.06			0.3	0.3	0.16	0.16	0.16	0.16		
C6070	0.06	0.06			0.3	0.3				0.53	0.53	0.53
C8070	0.06	0.06	0.06	0.06	0.3	0.3				0.53	0.53	0.53

How to order

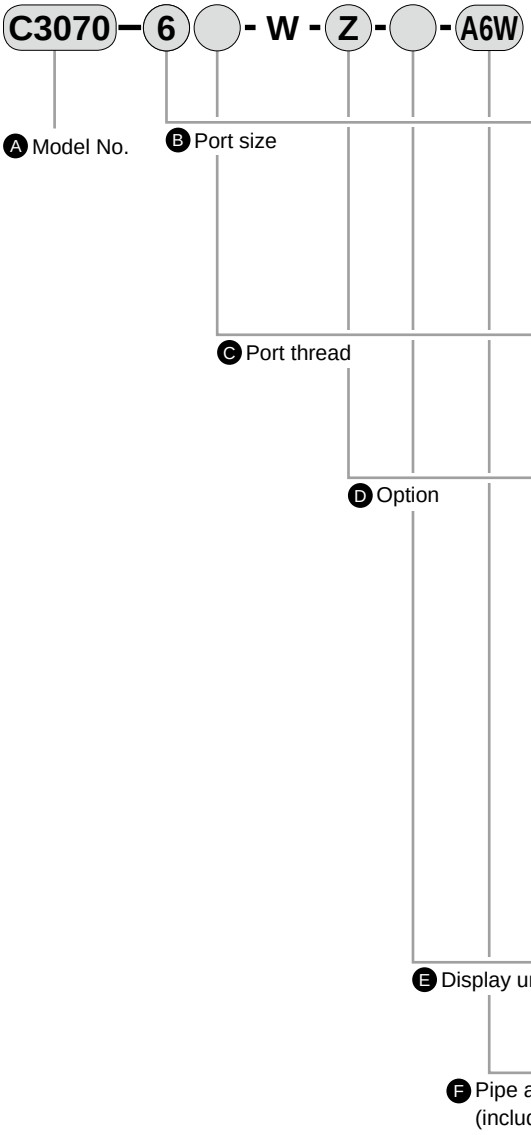

* Refer to page 30 for the explanation of the option.

Code	Description	A Model No. C3070	C4070	C6070	C8070
B Port size					
8	1/4	●	●		
10	3/8	●	●		
15	1/2		●		
20	3/4		●*1	●	●
25	1			●	●
C Port thread					*2
Blank	Rc thread	●	●	●	●
N	NPT thread	●	●	●	●
G	G thread	●	●	●	●
D Option					*3
Drain discharge *4, *5	**Blank** With manual drain cock	●	●	●	●
	F Auto-drain, man OVRD (NO: no press→Exhaust)	●	●	●	●
	F1 Auto-drain, man OVRD (NC: no press→no exhaust)	●	●	●	●
	FF Large auto-drain, man OVRD (NO: no press→Exhaust)				●
	FF1 Large auto-drain, man OVRD (NC: no press→no exhaust)				●
Bowl material	**Blank** Polycarbonate bowl	●	●	●	●
	Z Nylon bowl	●	●	●	●
	M Metal bowl	●	●	●	●
	M1 Metal bowl with manual drain cock	●	●	●	●
Diff press detect	**Blank** Without differential pressure detection port	●	●	●	●
	Q With differential pressure detection port (Rc 1/4)			●	●
Flow direction	**Blank** Standard flow (left → right)	●	●	●	●
	X1 Reverse flow (right → left)	●	●	●	●
E Display unit					
Blank	MPa display (Rc thread), psi display (NPT thread), bar display (G thread)	●	●	●	●
J1	MPa display (NPT, G thread)	●	●	●	●
F Pipe adaptor set (included)				Page 350	*6
Blank	Not included	●	●	●	●
A8*W	1/4 pipe adaptor set	●	●		
A10*W	3/8 pipe adaptor set	●	●		
A15*W	1/2 pipe adaptor set	●	●		
A20*W	3/4 pipe adaptor set		●	●	●
A25*W	1 pipe adaptor set			●	●
A32*W	1 1/4 pipe adaptor set			●	●
*** Adaptor thread**					
Blank	Rc thread	●	●	●	●
N	NPT thread	●	●	●	●
G	G thread	●	●	●	●

⚠ Precautions for model No. selection

1: Pipe adaptor A400-20-W is assembled on both ends of C4070-20*-W. A20*W does not need to be selected for the pipe adaptor set.
*2: G threads and NPT threads are available for IN, OUT and drain outlet (metal bowl with auto-drain).
*3: Select options for the drainage, bowl material, element and differential pressure detection. When selecting options for several items, list options in order from the top.
*4: Refer to page 354 for the auto-drain usage conditions.
*5: When option code “F” is selected, the NO auto-drain is supplied with the air filter and the NC auto-drain is supplied with the oil mist filter. When option code “F1” is selected, the NC auto-drain is included with the air filter and oil mist filter. For “FF” and “FF1”, only the filter has a large discharge rate. The oil mist filter is normal NC auto-drain.
*6: The joiner set is enclosed with the pipe adaptor set.

F.F.M. Combination

Dimensions CAD

● C3070-W

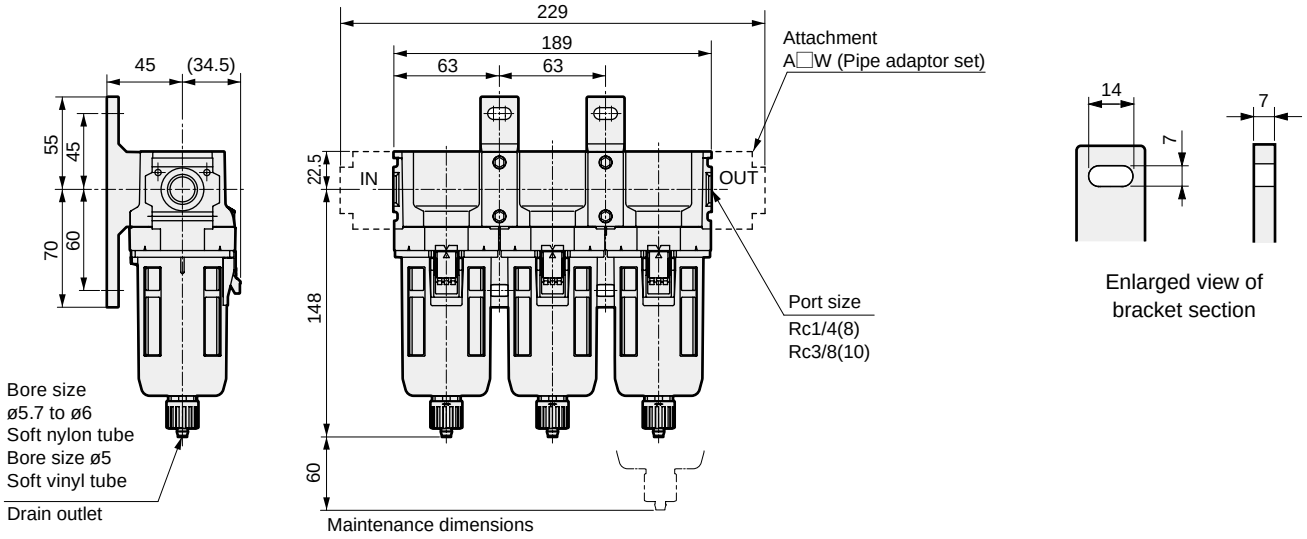

● Refer to page 113 for the dimensions of the metal bowl option filter and page 124 for the oil mist filter.

● C4070-W

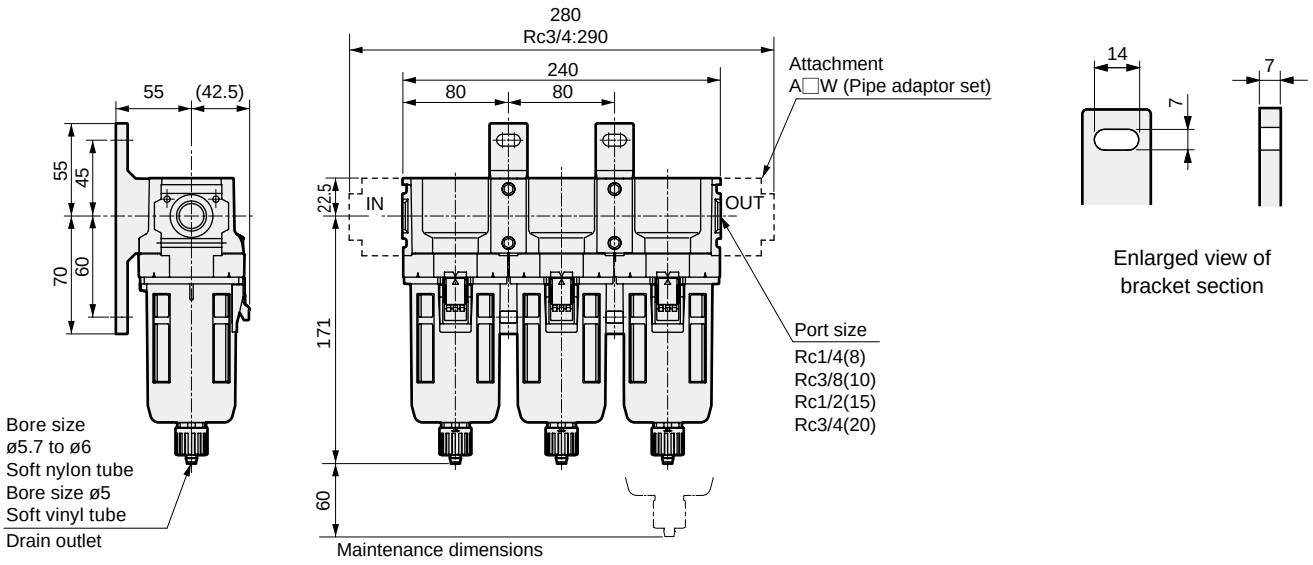

● Refer to page 113 for the dimensions of the metal bowl option filter and page 124 for the oil mist filter.

Dimensions

● C6070-W

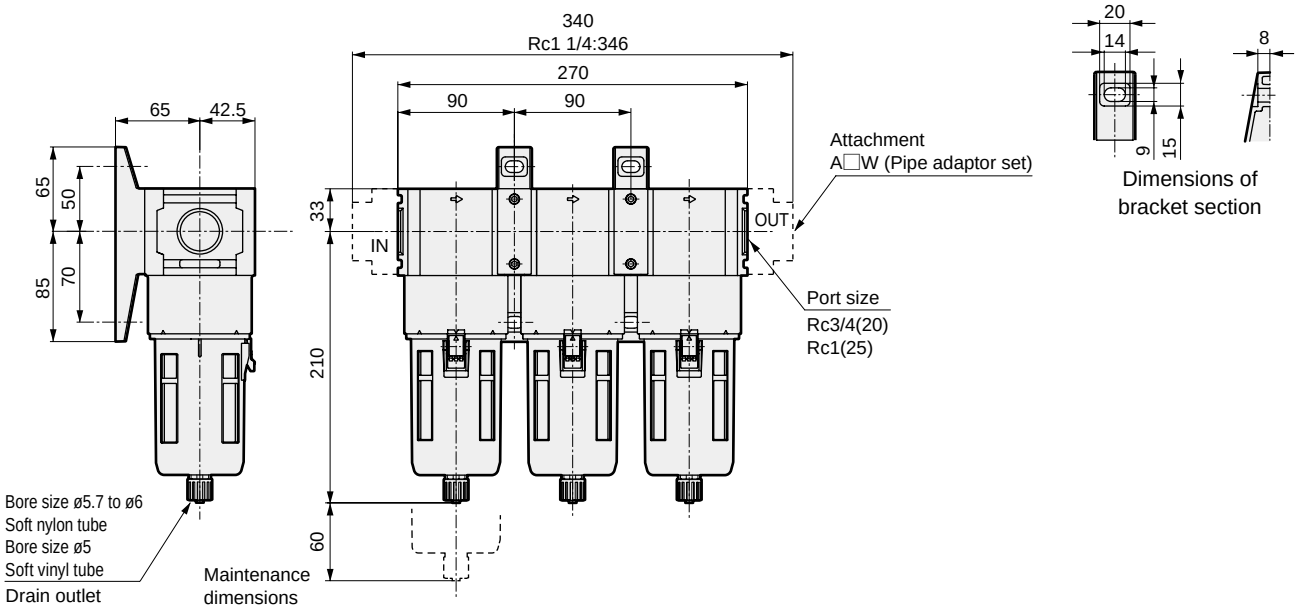

● Refer to page 113 for the dimensions of the metal bowl option filter and page 124 for the oil mist filter.

● C8070-W

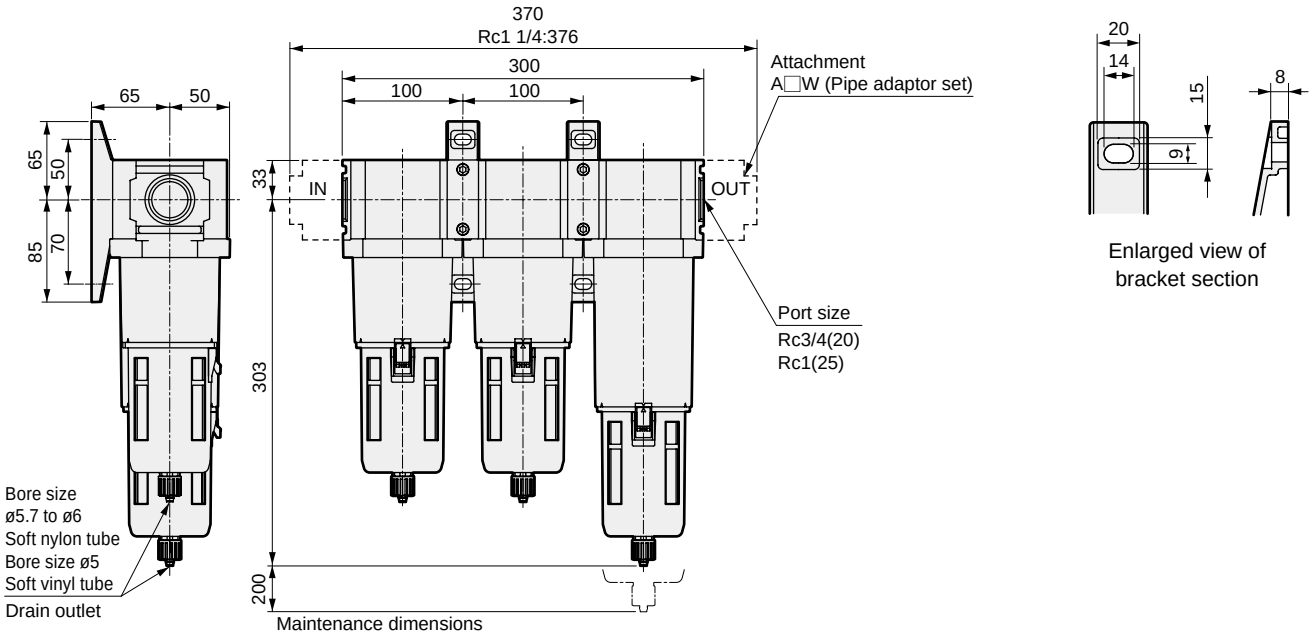

● Refer to page 113 for the dimensions of the metal bowl option filter and page 124 for the oil mist filter.

Customized combination specifications sheet

Overview

Customized combination is a customer-oriented service meeting various combination needs for each user.
Complete the following specifications sheet before placing an order.

How to complete customized combination specifications sheet

(1) Indicate the full model No. in the model No. field for the required part.
(2) Place a "○" to indicate the installation position, and designate "Up" or "Down" for the direction of the required part.
(3) Indicate "○" in the bracket and joiner fields.

- Refer to each section in this catalog by configuration for "How to order," descriptions, etc.
- Combination is possible with products allowing modular connection (3000 and 4000 Series, etc.). In this case, use the specification sheet for the larger series and make a note in the blank.
- Only the FRL Standard White Series can be selected.
- If air unit components (CXU) are included, use the CXU specifications.

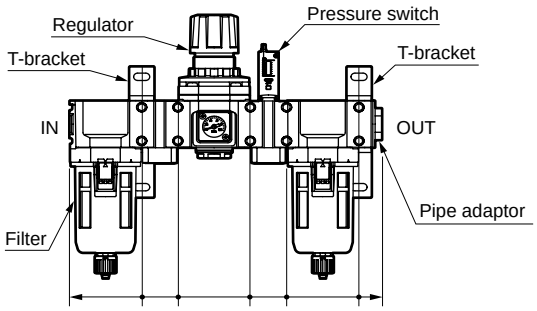

Dimensions are calculated by totaling the face-to-face dimensions of each component. The bracket mounting position can also be calculated.

C3000 Series customized combination specifications sheet

Contact _____ Quantity _____ set(s)
Slip No. _____ Delivery date / /

Date issued / /
Company _____
Contact _____
Purchase order No. _____

● Model No.: **C3000-UN-** ( ) - ( )

CKD Sales have the factory check indicated specifications, and indicate the number if OK.

Designate the direction of compressed air flow as seen from the front. Leave blank when selecting "blank".

Fluid direction	
Blank	Left → Right
X1	Right → Left

Technical confirmation No.

For products with the ★ mark, indicate up or down. For the regulator's knob direction, indicate up/down, and the port up/down for other components.

Indicate the installation position when seen from the front from the left.

One pipe adaptor is included. This is not a two-piece set and so fill in the required fields.

Part name	Interface dimensions	Model No.	Direction	Installation position	Technical use field
Pipe adaptor	20	A400-UN-10-W		○	
Air filter	63	F3000-8-W	○		
Filter/regulator	63	W3000-W			
		W3100-W			
Regulator ★	63	R3000-8-W	Up	○	
		R3100-W			
Oil mist filter	63	M3000-8-W		○	
Lubricator	63	L3000-W			
Distributor ★	31.5	D401-UN-00-8-W	Down	○	
Distributor	42	D300-W			
Pressure switch	31.5	P4100-UN-8-W		○	
	80	P4000-W			
Residual pressure exhaust valve	63	V3000-W			
		V3010-W			
L-type piping adapter ★	31.5	A401-UN-W			
T type bracket set	*1	B310-UN-W		○ ○ ○ ○	
Joiner set		C4000-J400-UN-W		○ ○ ○	

Sample form for the above product.

Use the T-brackets at regular intervals. When the T-bracket uses a single end for support, up to three stations can be used. When it is supported on both ends, up to five stations can be used. Only the indicated T-type bracket is available.

Please fill in this field when using different products such as options, bore sizes, etc.

CKD Sales have the factory check indicated specifications, and indicate the number if OK.

Precautions

UN in the model No. indicates a single unit, which does not include a joiner set, etc.
"UN" may also be indicated for the T type bracket set and joiner set, as the model No. dedicated for customized combination.

Using pressure switch P4100-UN-W at the end of the combination requires that a piping adapter (A400-UN-W, A401-UN-W) be added at the end. (The horizontal direction port does not have threads.)
When installing the residual pressure exhaust valve V3000-W and residual pressure exhaust valve with locking hole V3010-W on the primary side of the regulator and filter regulator, select reverse regulator R3100-W and reverse filter/regulator W3100-W.

*1: The distance from pipe center to the mounting surface is 45 mm.

Technical confirmation No.

Approval	Inspection	Contact

(Leave it blank. It is used by CKD when confirming your order.)

Technical Comment Field		

C1000 Series customized combination specifications sheet

Contact
Slip No.

Quantity set(s)
Delivery date /

Date issued / /
Company
Contact
Purchase order No.

● Model No.: **C1000-UN-** ( ) - ( )

Fluid direction	
Blank	Left → Right
X1	Right → Left

Technical confirmation No.

For products with the ★ mark, indicate up or down.
For the regulator's knob direction, indicate up/down, and indicate port up/down for other components.

Indicate the installation position when seen from the front from the left.

Part name	Interface dimensions	Model No.	Direction	Installation position								Technical use field
Pipe adaptor	21.5	A100-UN- -W										
Air filter	40	F1000- -W										
Filter/regulator	40	W1000- -W										
		W1100- -W										
Regulator ★	40	R1000- -W										
		R1100- -W										
Oil mist filter	40	M1000- -W										
Lubricator	40	L1000- -W										
Distributor ★	28	D101-UN-00- -W										
Pressure switch	28	P1100-UN- -W										
Residual pressure exhaust valve	40	V1000- -W										
L type piping adapter ★	28	A101-UN- -W										
T type bracket set *1		B110-UN-W										
Joiner set		C1000-J100-UN-W										

Precautions

"UN" in the model No. indicates a single unit, which does not include a joiner set, etc.
"UN" may also be indicated for the T type bracket set and joiner set, as the model No. dedicated for customized combination.

Using pressure switch P1100-UN-W at the end of the combination requires that a piping adapter (A100-UN-W, A101-UN-W) be added at the end. (The horizontal direction port does not have threads.)
When installing the residual pressure exhaust valve V1000-W on the primary side of the regulator and filter regulator, select reverse regulator R1100-W and reverse filter/regulator W1100-W.

*1: The distance from pipe center to the mounting surface is 40 mm.

Technical confirmation No.

Approval	Inspection	Contact

Technical Comment Field		

C2000 Series customized combination specifications sheet

Contact _____ Quantity _____ set(s) Date issued / /

Slip No. _____ Delivery date / Company _____

Contact _____

Purchase order No. _____

● Model No.: **C2000-UN-** ( ) - ( )

Fluid direction	
Blank	Left → Right
X1	Right → Left

Technical confirmation No.

For products with the ★ mark, indicate up or down.
For the regulator's knob direction, indicate up/down, and indicate port up/down for other components.

Indicate the installation position when seen from the front from the left.

Part name	Interface dimensions	Model No.	Direction	Installation position								Technical use field
Pipe adaptor	20	A400-UN- -W										
Air filter	50	F2000- -W										
	63	F3000- -W										
Filter/regulator	50	W2000- -W										
		W2100- -W										
Regulator ★	50	R2000- -W										
		R2100- -W										
Oil mist filter	50	M2000- -W										
	63	M3000- -W										
Lubricator	63	L3000- -W										
Distributor ★	31.5	D401-UN-00- -W										
Distributor	42	D300- -W										
Pressure switch	31.5	P4100-UN- -W										
	80	P4000- -W										
Residual pressure exhaust valve	63	V3000- -W										
		V3010- -W										
L type piping adapter ★	31.5	A401-UN- -W										
T type bracket set *1		B310-UN-W										
Joiner set		C4000-J400-UN-W										

Precautions

"UN" in the model No. indicates a single unit, which does not include a joiner set, etc.
"UN" may also be indicated for the T type bracket set and joiner set, as the model No. dedicated for customized combination.

Using pressure switch P4100-UN-W at the end of the combination requires that a piping adapter (A400-UN-W, A401-UN-W) be added at the end. (The horizontal direction port does not have threads.)
When installing the residual pressure exhaust valve V3000-W and residual pressure exhaust valve with locking hole V3010-W on the primary side of the regulator and filter regulator, select reverse regulator R2100-W and reverse filter / regulator W2100-W.

*1: The distance from pipe center to the mounting surface is 45 mm.

Technical confirmation No.

Approval	Inspection	Contact

Technical Comment Field		

C3000 Series customized combination specifications sheet

Contact
Slip No.

Quantity set(s)
Delivery date /

Date issued / /
Company
Contact
Purchase order No.

● Model No.: **C3000-UN-** ( ) - ( )

Fluid direction	
Blank	Left → Right
X1	Right → Left

Technical confirmation No.

For products with the ★ mark, indicate up or down.
For the regulator's knob direction, indicate up/down, and the port up/down for other components.

Indicate the installation position when seen from the front from the left.

Part name	Interface dimensions	Model No.	Direction	Installation position								Technical use field
Pipe adaptor	20	A400-UN- -W										
Air filter	63	F3000- -W										
Filter/regulator	63	W3000- -W										
		W3100- -W										
Regulator ★	63	R3000- -W										
		R3100- -W										
Oil mist filter	63	M3000- -W										
Lubricator	63	L3000- -W										
Distributor ★	31.5	D401-UN-00- -W										
Distributor	42	D300- -W										
Pressure switch	31.5	P4100-UN- -W										
	80	P4000- -W										
Residual pressure exhaust valve	63	V3000- -W										
		V3010- -W										
L type piping adapter ★	31.5	A401-UN- -W										

T type bracket set	*1	B310-UN-W										
Joiner set		C4000-J400-UN-W										

Precautions

"UN" in the model No. indicates a single unit, which does not include a joiner set, etc.
"UN" may also be indicated for the T type bracket set and joiner set, as the model No. dedicated for customized combination.

Using pressure switch P4100-UN-W at the end of the combination requires that a piping adapter (A400-UN-W, A401-UN-W) be added at the end. (The horizontal direction port does not have threads.)
When installing the residual pressure exhaust valve V3000-W and residual pressure exhaust valve with locking hole V3010-W on the primary side of the regulator and filter regulator, select reverse regulator R3100-W and reverse filter/regulator W3100-W.

*1: The distance from pipe center to the mounting surface is 45 mm.

Technical confirmation No.

Approval	Inspection	Contact

Technical Comment Field		

C4000 Series customized combination specifications sheet

Contact
Slip No.
Quantity set(s)
Delivery date /

Date issued / /
Company
Contact
Purchase order No.

● Model No.: **C4000-UN-** ( ) - ( )

*1: 20 mm for port sizes 8, 10 and 15, and 25 mm for port size 20.
*2: The distance from pipe center to the mounting surface is 55 mm.

Fluid direction	
Blank	Left → Right
X1	Right → Left

Technical confirmation No.

For products with the ★ mark, indicate up or down.
For the regulator's knob direction, indicate up/down, and indicate port up/down for other components.

Indicate the installation position when seen from the front from the left.

Part name	Interface dimensions	Model No.	Direction	Installation position								Technical use field
Pipe adaptor	*1	A400-UN- -W										
Air filter	63	F3000- -W										
	80	F4000- -W										
Filter/regulator	63	W3000- -W										
		W3100- -W										
	80	W4000- -W										
		W4100- -W										
Regulator ★	63	R3000- -W										
		R3100- -W										
	80	R4000- -W										
		R4100- -W										
Oil mist filter	63	M3000- -W										
	80	M4000- -W										
Lubricator	63	L3000- -W										
	80	L4000- -W										
Distributor ★	31.5	D401-UN-00- -W										
Distributor	42	D300- -W										
Pressure switch	31.5	P4100-UN- -W										
	80	P4000- -W										
Residual pressure exhaust valve	63	V3000- -W										
		V3010- -W										
L type piping adapter ★	31.5	A401-UN- -W										
T type bracket set	*2	B410-UN-W										
Joiner set		C4000-J400-UN-W										

Precautions

"UN" in the model No. indicates a single unit, which does not include a joiner set, etc.
"UN" may also be indicated for the T type bracket set and joiner set, as the model No. dedicated for customized combination.

Using pressure switch P4100-UN-W at the end of the combination requires that a piping adapter (A400-UN-W, A401-UN-W) be added at the end. (The horizontal direction port does not have threads.)
When installing the residual pressure exhaust valve V3000-W and residual pressure exhaust valve with locking hole V3010-W on the primary side of the regulator and filter regulator, select reverse regulator R4100-W and reverse filter/regulator W4100-W.

Technical confirmation No.

Approval	Inspection	Contact

Technical Comment Field		

C6000 Series customized combination specifications sheet

Contact
Slip No.

Quantity set(s)
Delivery date /

Date issued / /
Company
Contact
Purchase order No.

● Model No.: **C6000-UN-** ( ) - ( )

Fluid direction	
Blank	Left → Right
X1	Right → Left

Technical confirmation No.

For products with the ★ mark, indicate up or down.
For the regulator's knob direction, indicate up/down, and indicate port up/down for other components.

Indicate the installation position when seen from the front from the left.

Part name	Interface dimensions	Model No.	Direction	Installation position	Technical use field
Pipe adaptor	*1	A800-UN- -W			
Air filter	90	F6000- -W			
	100	F8000- -W			
Filter/regulator	100	W8000- -W			
		W8100- -W			
Regulator ★	90	R6000- -W			
		R6100- -W			
	100	R8000- -W			
		R8100- -W			
Oil mist filter	90	M6000- -W			
	100	M8000- -W			
Lubricator	100	L8000- -W			
Distributor ★	50	D801-UN-00- -W			
Pressure switch	50	P8100-UN- -W			
Residual pressure exhaust valve	90	V6010- -W			
L type piping adapter ★	50	A801-UN- -W			
T type bracket set	*2	B810-UN-W			
Joiner set		C8000-J800-UN-W			

Precautions

"UN" in the model No. indicates a single unit, which does not include a joiner set, etc.
"UN" may also be indicated for the T type bracket set and joiner set, as the model No. dedicated for customized combination.

Using pressure switch P8100-UN-W at the end of the combination requires that a piping adapter (A800-UN-W, A801-UN-W) be added at the end. (The horizontal direction port does not have threads.)
When installing the residual pressure exhaust valve with locking hole V6010-W on the primary side of the regulator and filter regulator, select reverse regulator R6100-W or R8100-W and reverse filter/regulator W8100-W.

*1: Port sizes 20, 25 are 35 mm, 32 is 38 mm.
*2: The distance from pipe center to the mounting surface is 65 mm.

Technical confirmation No.

Approval	Inspection	Contact

Technical Comment Field		

C8000 Series customized combination specifications sheet

Contact _____ Quantity _____ set(s) Date issued / /

Slip No. _____ Delivery date / Company _____

Contact _____

Purchase order No. _____

● Model No.: **C8000-UN-** ( ) - ( )

Fluid direction	
Blank	Left → Right
X1	Right → Left

Technical confirmation No.

*1: 35 mm for port sizes 20 and 25, and 38 mm for 32.
*2: The distance from pipe center to the mounting surface is 65 mm.

For products with the ★ mark, indicate up or down.
For the regulator's knob direction, indicate up/down, and indicate port up/down for other components.

Indicate the installation position when seen from the front from the left.

Part name	Interface dimensions	Model No.	Direction	Installation position	Technical use field
Pipe adaptor	*1	A800-UN- -W			
Air filter	100	F8000- -W			
Filter/regulator	100	W8000- -W			
		W8100- -W			
Regulator ★	100	R8000- -W			
		R8100- -W			
Oil mist filter	100	M8000- -W			
Lubricator	100	L8000- -W			
Distributor ★	50	D801-UN-00- -W			
Pressure switch	50	P8100-UN- -W			
Residual pressure exhaust valve	90	V6010- -W			
L type piping adapter ★	50	A801-UN- -W			
T type bracket set	*2	B810-UN-W			
Joiner set		C8000-J800-UN-W			

Precautions

"UN" in the model No. indicates a single unit, which does not include a joiner set, etc.
"UN" may also be indicated for the T type bracket set and joiner set, as the model No. dedicated for customized combination.

Using pressure switch P8100-UN-W at the end of the combination requires that a piping adapter (A800-UN-W, A801-UN-W) be added at the end. (The horizontal direction port does not have threads.)
When installing the residual pressure exhaust valve with locking hole V6010-W on the primary side of the regulator and filter regulator, select reverse regulator R8100-W and reverse filter/regulator W8100-W.

Technical confirmation No.

Approval	Inspection	Contact

Technical Comment Field		

MEMO



Filter/regulator Standard White Series

W1000/W2000/W3000/W4000/W8000-W Series

New Series of 5 µm element for dust removal, and 0.3 µm element for tar removal.

● Port size: 1/8 to 1

JIS symbol 

RoHS CAD

Specifications

1 MPa ≈ 145.0 psi, 1 MPa = 10 bar

Item	W1000-W	W2000-W	W3000-W	W4000-W	W8000-W
Appearance					
Working fluid	Compressed air				
Max. working pressure MPa	1.0 (≈150 psi, 10 bar) *1, 2, 3				
Proof pressure MPa	1.5 (≈220 psi, 15 bar) *1				
Ambient / fluid temperatures °C	5 (41°F) to 60 (140°F) *4				
Filtration rating µm	5		5 or 0.3		
Set pressure MPa	0.05 to 0.85 *1	0.05 (≈7.3 psi, 0.5 bar) to 0.85 (≈120 psi, 8.5 bar)			
Pressure relief	With relief mechanism				
Drain capacity cm^3	12	25	45	80	80 (*5)
Port size Rc,NPT,G	1/8, 1/4 (3/8 uses an adaptor)	1/4, 3/8 (1/2 uses an adaptor)	1/4,3/8,1/2	1/4, 3/8, 1/2 (3/4 uses an adaptor)	3/4, 1 (1 1/4 uses an adaptor)
Weight kg	0.175	0.40	0.6	0.9	2.0
Standard accessories	Pressure gauge and bowl guard				

*1: When using W1000-W Series "F1" with auto-drain, the min. working pressure is 0.2 MPa, the max. working pressure is 0.7 MPa and the proof pressure is 1.05 MPa. For the max. working flow rate, refer to the max. working flow rate table of F1000-W-F1 with auto-drain (page 106). Set the working flow rate to less than or equal to the max. working flow rate.

*2: In the case of "F" with auto-drain, the min. working pressure of auto-drain is 0.1 MPa. Air is purged with initial drainage until pressure reaches 0.1 MPa.

*3: In the case of "F1" with auto-drain, the min. working pressure of auto-drain is 0.15 MPa.

*4: The ambient / fluid temperatures for "RN" or "RP" (pressure switch with display PPR is mounted) and "R2" (digital pressure sensor PPX is attached) is 5 to 50°C.

*5: Up to 170 cm^3 is stored with the manual drain cock only.

*6: W2000-W Series with "F1" (with auto-drain) must be used at equal to or less than the max. working flow rate. (Refer to the F2000-W section on page 106 for max. flow rate.)

Option weight

* Add to the weight of the standard accessories.

Unit: kg

Code	Drain discharge				Bowl material		Pressure gauge		Pipe adaptor set			
	F	F1	FF	FF1	M	M1	T*	RN/RP	A6*W	A8*W	A10*W	A15*W
W1000		0.007					0	0.04	0.09	0.09	0.09	
W2000		0.02				0.1	0			0.16	0.16	0.16
W3000	0.02	0.02			0.1	0.1	0	0.04		0.16	0.16	0.16
W4000	0.02	0.02			0.1	0.1	0	0.04		0.16	0.16	0.16
W8000	0.02	0.02	0.02	0.02	0.1	0.1	0	0.04				

Code	Pipe adaptor set			Attachment							
	A20*W	A25*W	A32*W	BW	B3W	G45P	G49P	G59P	G40P	G52P	R2
W1000				0.1	0.04	0.074	0.086	0.115	0.085	0.15	0.04
W2000				0.15	0.06	0.074	0.086		0.085	0.15	0.04
W3000				0.17	0.07	0.074	0.086	0.115	0.085	0.15	0.04
W4000	0.16			0.21	0.11	0.074	0.086	0.115	0.085	0.15	0.04
W8000	0.53	0.53	0.53	0.36		0.074	0.086	0.115	0.085	0.15	0.04

Ozone-proof specs (Ending Page 10)

W*000 - … **- W -** … **-** P11

Clean-room specs (Catalog No. CB-033SA)

● Anti-dust generation structure for use in cleanrooms

W*000 - …… **-** P7*

Specs for rechargeable battery (Catalog No. CC-1226A)

● Structure compatible with rechargeable battery manufacturing process

W*000 - …… **-** P4*

How to order

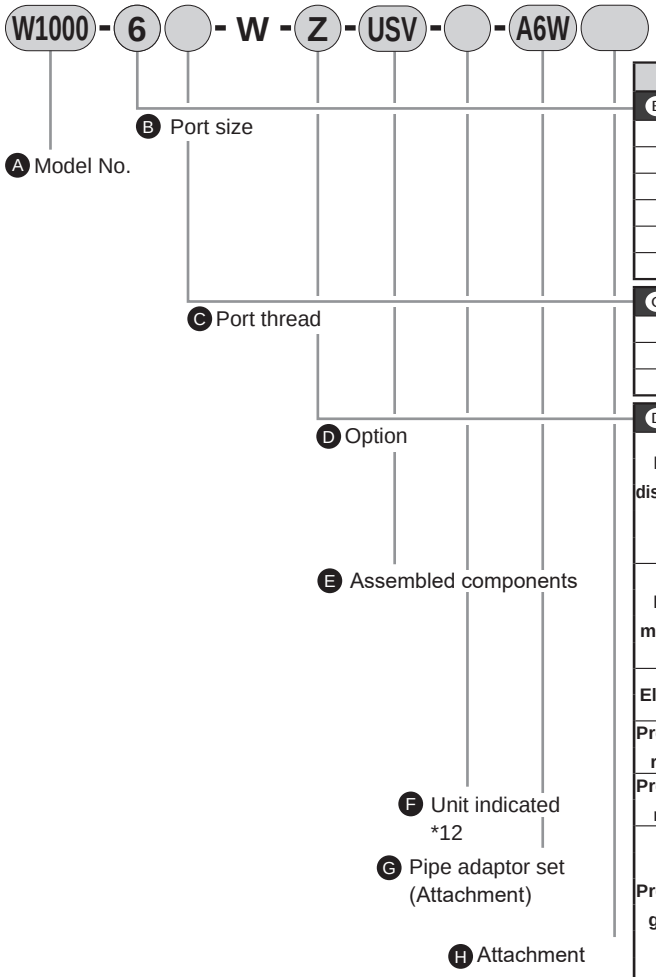

* Refer to page 30 for the explanation of the option.

Code	Description	A Model No. W1000	W2000	W3000	W4000	W8000
B Port size						
6	1/8	●				
8	1/4	●	●	●	●	
10	3/8		●	●	●	
15	1/2			●	●	
20	3/4					●
25	1					●
C Port thread						*1
Blank	Rc thread	●	●	●	●	●
N	NPT thread	●	●	●	●	●
G	G thread	●	●	●	●	●
D Option						*2
Drain discharge *3	Blank: Manual drain cock	●	●	●	●	●
	F: Auto-drain with manual override (NO: Exhaust when not pressurized)			●	●	●
	F1: Auto-drain with manual override (NC: No exhaust when not pressurized)	●	●	●	●	●
	FF: Large auto-drain with manual override (NO: Exhaust when not pressurized)					●
	FF1: Large auto-drain with manual override (NC: No exhaust when not pressurized)					●
Bowl material	Blank: Polycarbonate bowl	●	●	●	●	●
	Z: Nylon bowl	●	●	●	●	●
	M: Metal bowl			●	●	●
	M1: Metal bowl with manual drain cock		●	●	●	●
Element	Blank: 5 µm	●	●	●	●	●
	Y: 0.3 µm (submicron) *4			●	●	●
Pressure range	Blank: 0.05 to 0.85 MPa	●	●	●	●	●
	L: 0.05 to 0.35 MPa *5	●	●	●	●	●
Pressure relief	Blank: With relief mechanism	●	●	●	●	●
	N: Non-relief	●	●	●	●	●
Pressure gauge	Blank: With standard pressure gauge (G401-W)	●	●	●	●	●
	T: No pressure gauge (gauge port (1/4) is assembled sealed)	●	●	●	●	●
	T8: Pressure gauge ready (gauge port (1/4) is left open)	●	●	●	●	●
	T6: Digital pressure sensor PPX attachment option *6	●	●	●	●	●
	RN: Pressure switch with display, PPR assembled (NPN output 1 point)	●		●	●	●
	RP: Pressure switch with display, PPR assembled (PNP output 1 point)	●		●	●	●
Flow direction	Blank: Standard flow (left → right)	●	●	●	●	●
	X1: Reverse flow (right → left)	●	●	●	●	●
E Assembled components						
U *13	Assembled component type *7	●	●	●	●	
Assembled components: S	Pressure switch (P1100-W, P4100-W)	●	●	●	●	
Assembled components: V	Residual pressure exhaust valve (V1000-W, V3000-W)	●	●	●	●	
Assembled components: SV	Pressure switch (P1100-W, P4100-W) + Residual pressure exhaust valve (V1000-W, V3000-W)	●	●	●	●	
F Unit indicated						
Blank	MPa display (Rc thread), psi display (NPT thread)), bar display (G thread)	●	●	●	●	●
J1	MPa display (NPT, G threads)	●	●	●	●	●
G Pipe adaptor set (attachments)						Page 350 *8, *9
Blank	Not included	●	●	●	●	●
A6*W	1/8 pipe adaptor set	●				
A8*W	1/4 pipe adaptor set	●	●	●	●	
A10*W	3/8 pipe adaptor set	●	●	●	●	
A15*W	1/2 pipe adaptor set		●	●	●	
A20*W	3/4 pipe adaptor set				●	●
A25*W	1 pipe adaptor set					●
A32*W	1 1/4 pipe adaptor set					●
*** Adaptor thread**						
Blank	Rc thread	●	●	●	●	●
N	NPT thread	●	●	●	●	●
G	G thread	●	●	●	●	●
H Attachment						Pages 346 and 363 *10
Blank	Not included	●	●	●	●	●
BW	C-bracket	●	●	●	●	●
B3W	L-bracket *11	●	●	●	●	
G45P	G45D-8-P10 (L: G45D-8-P04)	●	●	●	●	●
G49P	G49D-8-P10(L:G49D-8-P04)	●	●	●	●	●
G59P	G59D-8-P10(L:G59D-8-P04)	●		●	●	●
G40P	G40D-8-P10(L:G40D-8-P04)	●	●	●	●	●
G52P	G52D-8-P10(L:G52D-8-P10)	●	●	●	●	●
R2 *6	Digital pressure sensor: PPX-R10N-6M	●	●	●	●	●

⚠ Precautions for model No. selection

*1: G threads and NPT threads are available for IN, OUT, gauge port and drain discharge port (metal bowl with auto-drain).
*2: Select options for drainage, bowl material, element, and regulator sections. When selecting options for several items, list options in order from the top.
*3: Refer to page 354 for the auto-drain usage conditions.
*4: Refer to page 108 for max. processing flow rate when option "Y" is selected.
*5: The pressure gauge's indication range is 0 to 0.4 MPa for the option "L".
*6: When the option "T6" is selected, only "Blank" or "R2" can be selected for G Other attachments. The digital pressure sensor PPX mounting port (Rc1/8) is left open.
*7: Mounting position for assembled components

Code	Installation position for attachments	Compatibility
S	W+(S)	W1000-W to W4000-W
V	W+(V)	W1000-W to W4000-W
SV	W+(S)+(V)	W1000-W to W4000-W

*8: The pipe adaptor set and C-bracket cannot be used together.
*9: The joiner set is enclosed with the pipe adaptor set.
*10: The pressure gauge and digital pressure sensor (included) can be selected only when C Port thread is Rc thread.
*11: For details on mounting the L-bracket, refer to (2. Regulator) of "⚠ Cautions and Installation & Adjustment" (page 357).
*12: Display unit options when selecting NPT threads: If Blank is selected, the pressure unit is psi and the temperature display unit is °F. When G thread and Blank display unit option are selected, the pressure unit will be bar and the temperature display unit will be °C. When NPT/G thread and "J1" display unit option are selected, the pressure unit will be MPa and the temperature display unit will be °C.
*13: Assembled components can be selected only with port size and drain discharge options. When selecting other options, they are handled as customized combinations.

Flow characteristics

● W1000-6-W

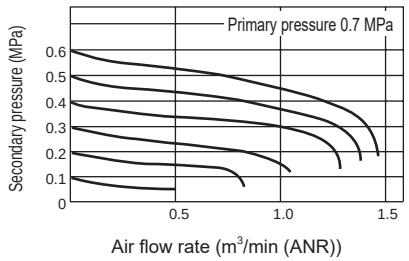

● W1000-8-W

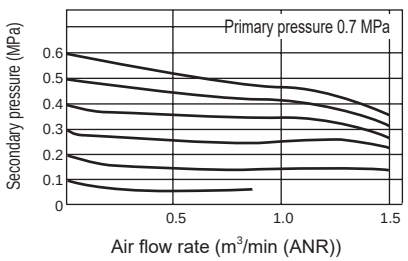

● W2000-8-W

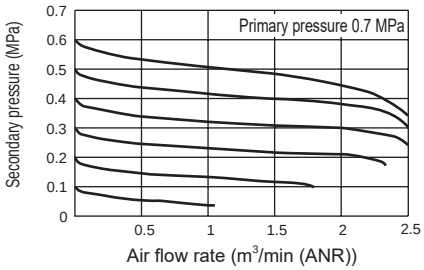

● W2000-10-W

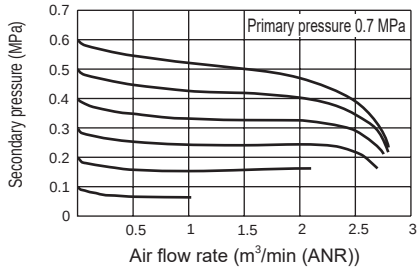

● W3000-8-W

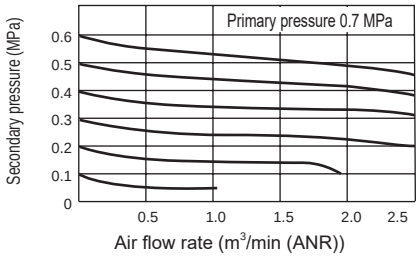

● W3000-10-W/W3000-15-W

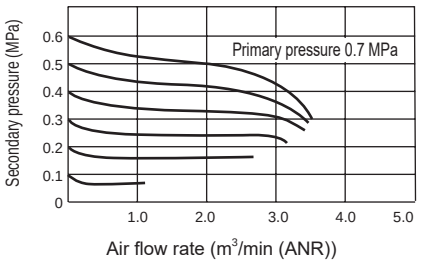

● W4000-8-W

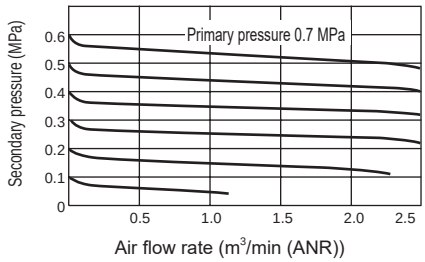

● W4000-10-W

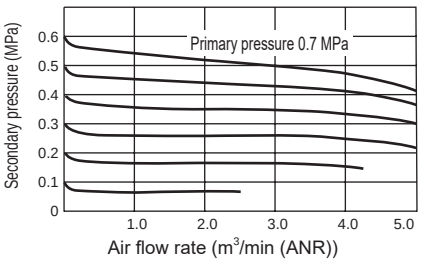

● W4000-15-W

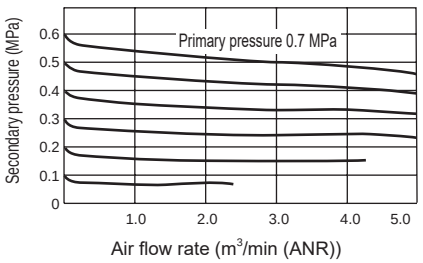

● W8000-20-W

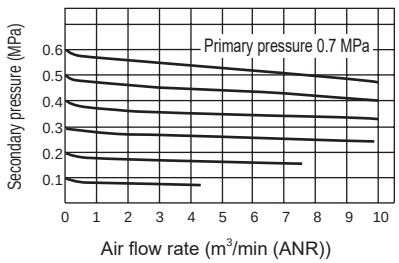

● W8000-25-W

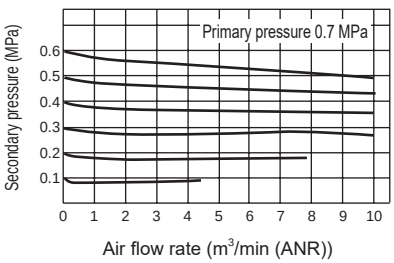

Pressure characteristics

● W1000-W

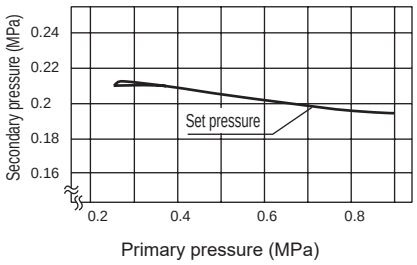

● W2000-W

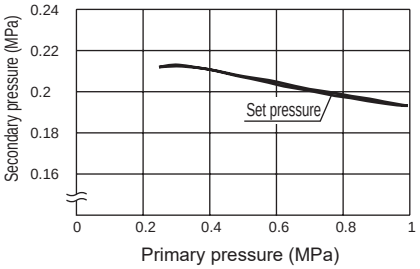

● W3000-W

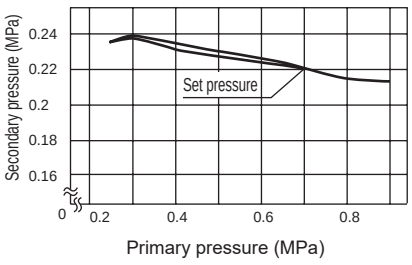

● W4000-W

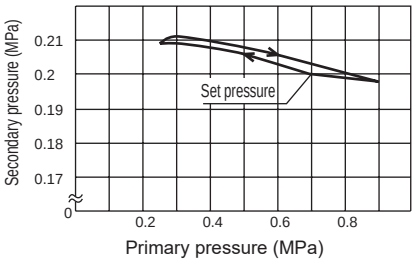

● W8000-W

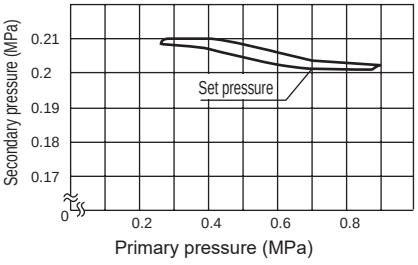

Internal structure and parts list

● W1000-W

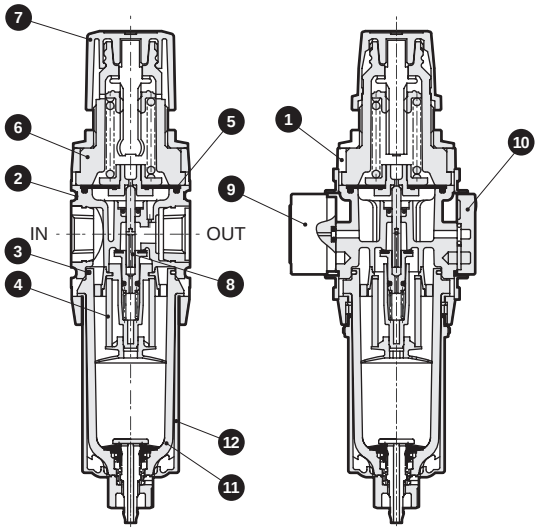

● W2000-W

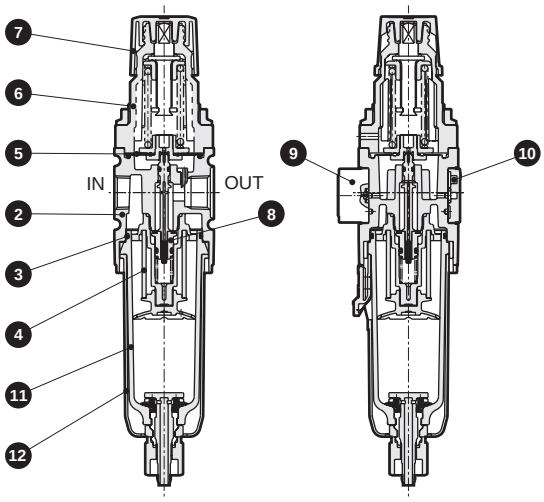

● W3000-W/W4000-W

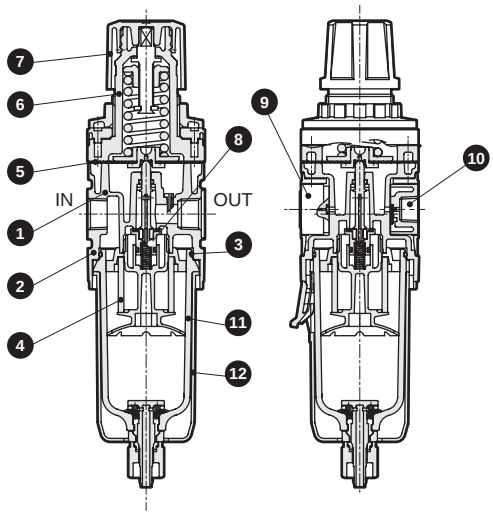

● W8000-W

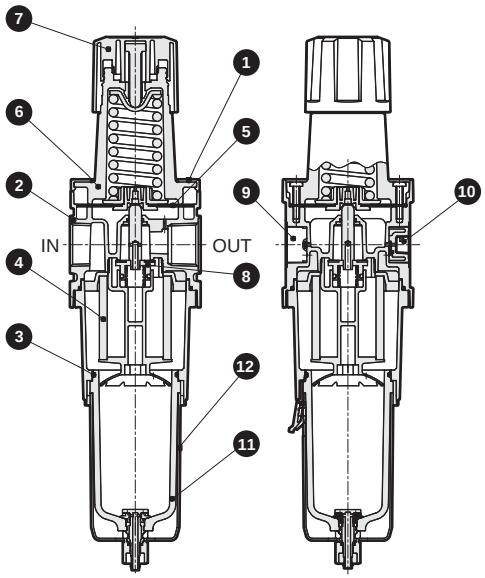

No.	Part name	Material				
		W1000-W	W2000-W	W3000-W	W4000-W	W8000-W
1	Plate cover	ABS resin	-	ABS resin		
2	Body	Polyamide resin, steel	Aluminum alloy die-casting			
3	O-ring *2	Special nitrile rubber				
4	Element *1	Polyacetal resin polypropylene	Polypropylene			
5	Diaphragm assembly	Polyacetal resin polypropylene	Polyacetal resin, nitrile rubber	Zinc alloy die-casting/nitrile rubber		
6	Cover	Polyamide resin	PBT resin			Aluminum alloy die-casting
7	Knob	Polyacetal resin				
8	Valve assembly	Copper alloy, hydrogenated nitrile rubber (polyacetal resin: W2000-W, W3000-W and W4000-W only)				
9	Pressure gauge assembly	PBT resin, polyacetal resin, polycarbonate resin, nitrile rubber, copper alloy, steel				
10	Gauge plug assembly	-		Polyamide resin, nitrile rubber, steel		
	Blanking plug assembly	PBT resin, nitrile rubber, steel		-		
11	Bowl assembly	Polycarbonate resin, polyacetal resin, urethane resin				
12	Bowl guard	Polyamide resin	Polyamide resin			

*1: The W1000-W has an assembled element.
*2: The O-ring of the W1000-W has a special shape.

Dimensions CAD

● W1000-W

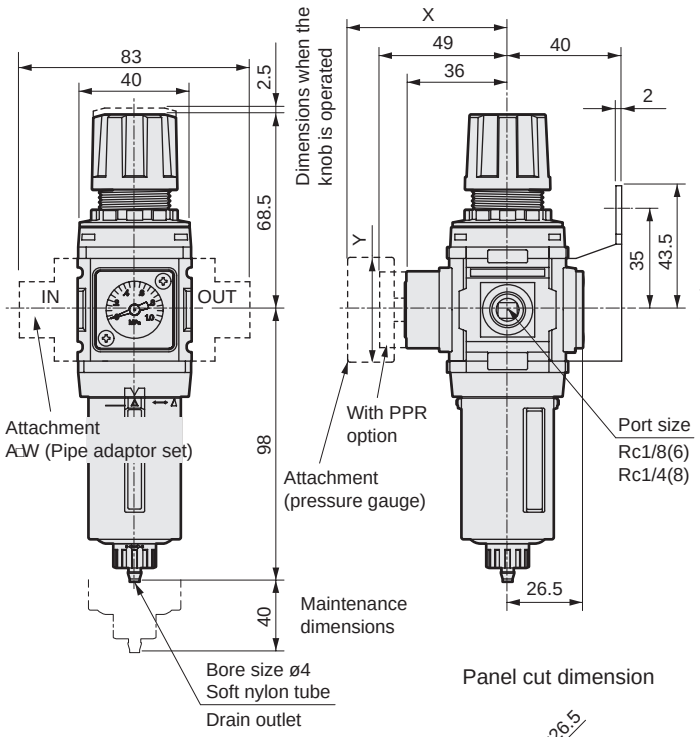

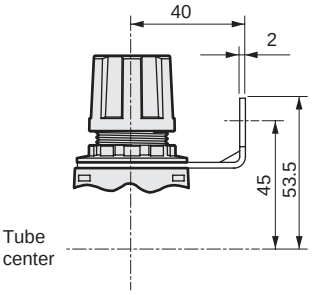

· Optional dimensions
With auto-drain (F1)

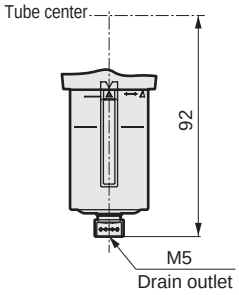

Panel cut dimension

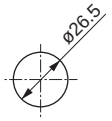

Panel plate thickness: max. 6 mm

· Attachment
C-bracket (-BW)
Part model No.: B120
· Material: Steel
Zinc plated

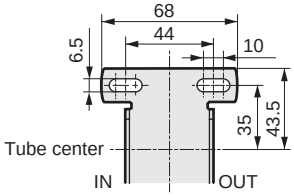

L-bracket (-B3W)
Part model No.: B130
· Material: Steel
Zinc plated

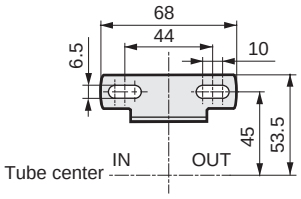

Pressure gauge attached optional dimensions table

Pressure gauge	X	Y
G45P	(74)	ø39
G49P	(73.5)	ø43.5
G59P	(76)	ø52
G40P	(75.5)	ø42.5
G52P	(86)	ø52.5
R2	(74)	□30

● W2000-W

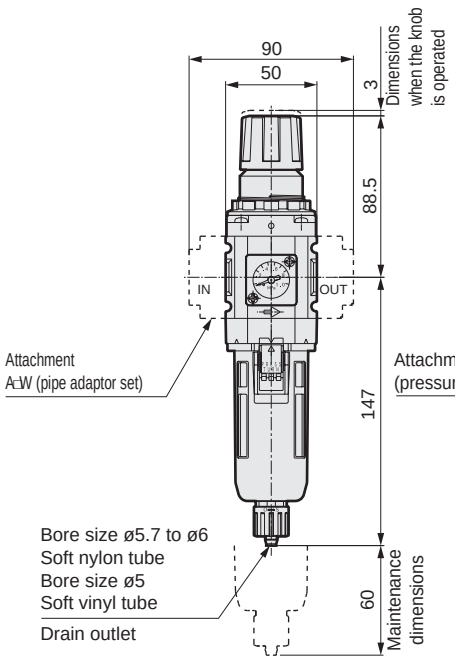

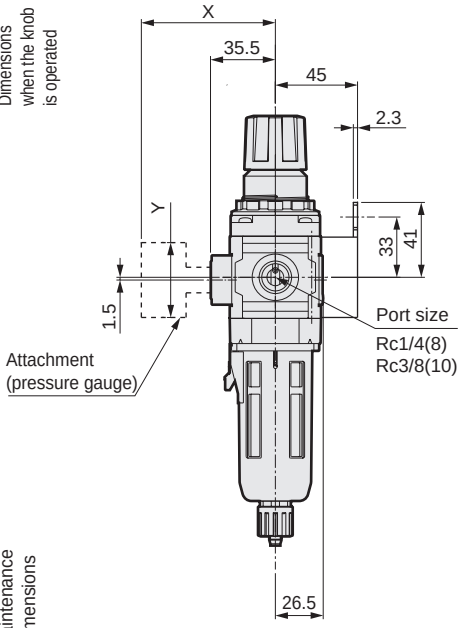

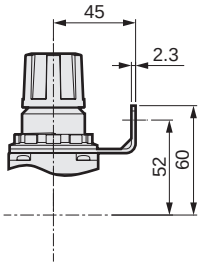

Panel cut dimension

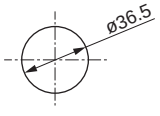

Panel plate thickness: max. 4 mm

· Attachment
C-bracket (-BW)
Part model No.: B220
· Material: Steel
Zinc plated

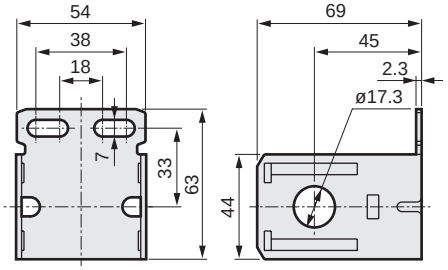

L-bracket (-B3W)
Part model No.: B230
· Material: Steel
Zinc plated

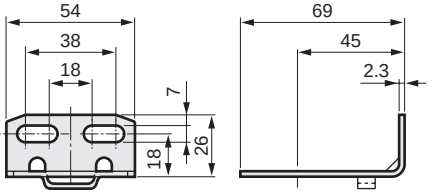

Pressure gauge attached optional dimensions table

Pressure gauge	X	Y
G45P	(73.5)	ø39
G49P	(73)	ø43.5
G40P	(75)	ø42.5
G52P	(85.5)	ø52.5
R2	(73)	□30

Dimensions CAD

● W3000-W

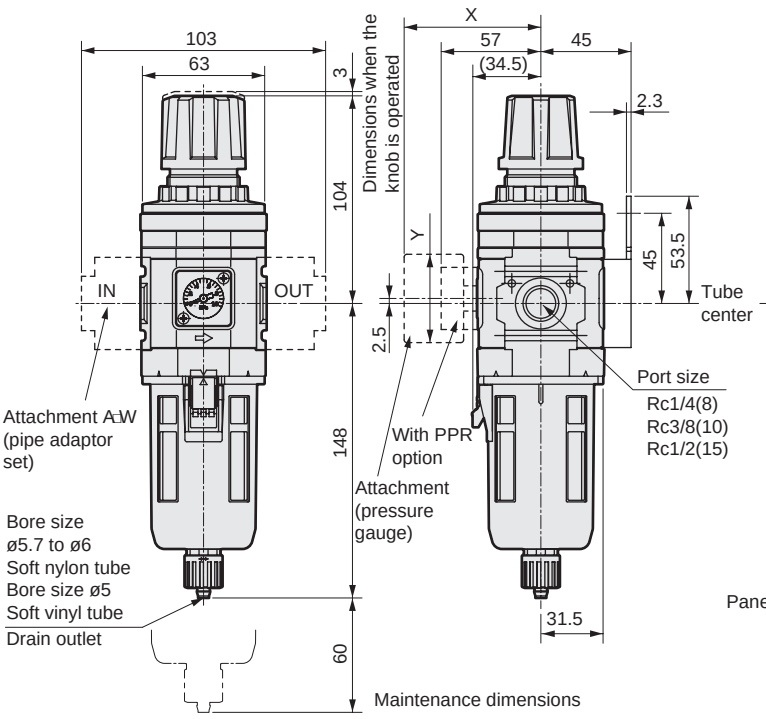

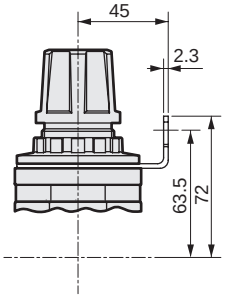

Panel cut dimension

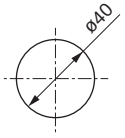

Panel plate thickness: max. 4 mm

· Attachment
C-bracket (-BW)
Part model No.: B320
· Material: Steel
Zinc plated

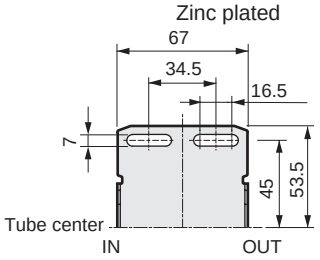

L-bracket (-B3W)
Part model No.: B330
· Material: Steel
Zinc plated

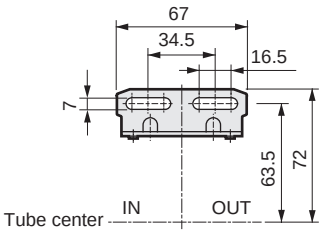

Pressure gauge attached optional dimensions table

Pressure gauge	X	Y
G45P	(70)	ø39
G49P	(69.5)	ø43.5
G59P	(72)	ø52
G40P	(71.5)	ø42.5
G52P	(82)	ø52.5
R2	(69.5)	□30

● For the plastic bowl, the dimensions of the manual cock and the auto-drain are the same.

● W4000-W

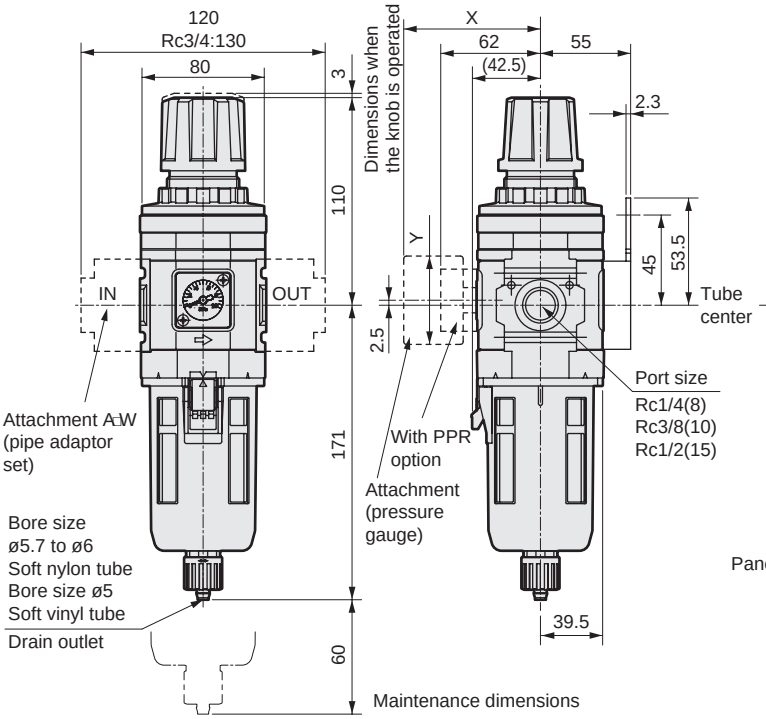

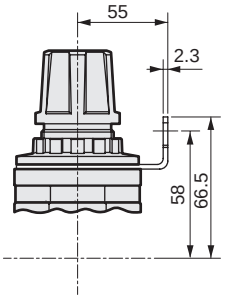

Panel cut dimension

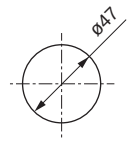

Panel plate thickness: max. 7 mm

· Attachment
C-bracket (-BW)
Part model No.: B420
· Material: Steel
Zinc plated

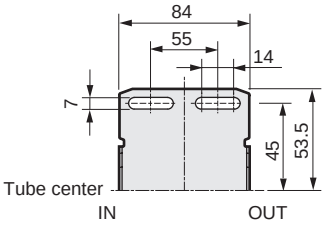

L-bracket (-B3W)
Part model No.: B430
· Material: Steel
Zinc plated

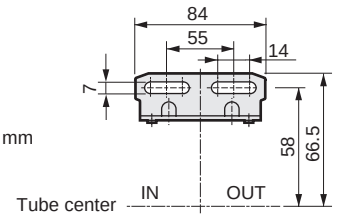

Pressure gauge attached optional dimensions table

Pressure gauge	X	Y
G45P	(75)	ø39
G49P	(74.5)	ø43.5
G59P	(77)	ø52
G40P	(76.5)	ø42.5
G52P	(86)	ø52.5
R2	(75)	□30

● For the plastic bowl, the dimensions of the manual cock and the auto-drain are the same.

Dimensions CAD

● W8000-W

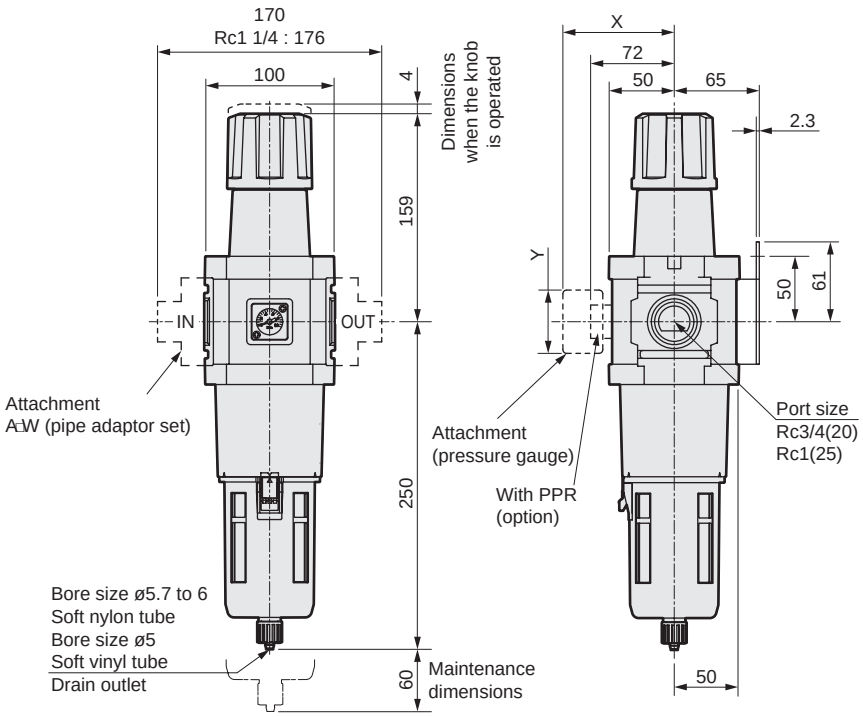

· Attachment
C-bracket (-BW)
Part model No.: B820
· Material: Steel
Zinc plated

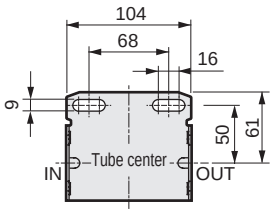

Pressure gauge attached optional dimensions table

Pressure gauge	X	Y
G45P	(85)	ø39
G49P	(84.5)	ø43.5
G59P	(87)	ø52
G40P	(86.5)	ø42.5
G52P	(98)	ø52.5
R2	(85)	□30

● For the plastic bowl, the dimensions of the manual cock and the auto-drain are the same.

Optional dimensions CAD

● Metal bowl (option)
[W2000-W, 3000-W, 4000-W, 8000-W]

Manual metal cock
(FM, F1M)

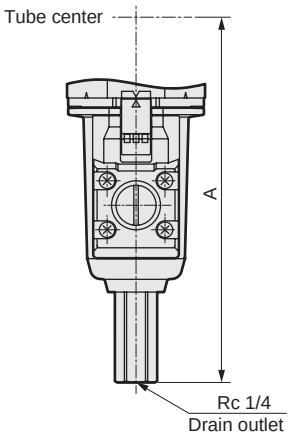

Manual cock (M)

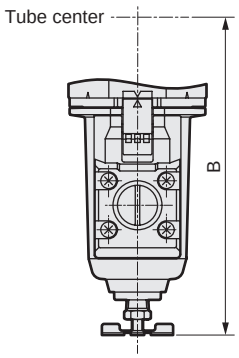

Manual resin cock
(M1)

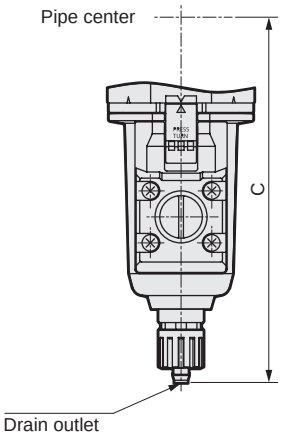

● Material of the metal bowl is aluminum die-casting.

Dimensions table

Model No.	F1M	M	M1
	A	B	C
W2000-W	-	-	147
W3000-W	164	143.5	154
W4000-W	187	166.5	177
W8000-W	266	245.5	256

Option assembly dimensions

● W1000-W to W4000-W

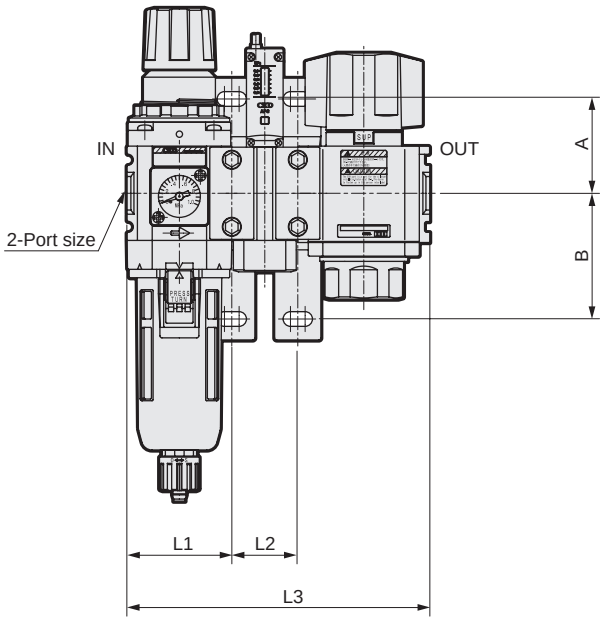

Assembled option / Model No.	S			V			SV			A	B
	L1	L2	L3	L1	L2	L3	L1	L2	L3		
W1000-W	40	28	89.5	40	-	80	40	28	108	35	45
W2000-W	50	31.5	102	50	-	113	50	31.5	145	45	60
W3000-W	63	31.5	115	63	-	126	63	31.5	158		
W4000-W	80	31.5	132	80	-	143	80	31.5	175		



Reverse filter and regulator Standard White Series

W1100/W2100/W3100/W4100/W8100-W Series

Introducing the 5 μm dust removing and 0.3 μm tar removing element with reverse flow function to the lineup.

● Port size: 1/8 to 1

JIS symbol 

RoHS CAD

Specifications

1 MPa ≈ 145.0 psi, 1 MPa = 10 bar

Item	W1100-W	W2100-W	W3100-W	W4100-W	W8100-W
Appearance					
Working fluid	Compressed air				
Max. working pressure MPa	1.0 (≈150 psi, 10 bar) *1, 2, 3				
Proof pressure MPa	1.5 (≈220 psi, 15 bar) *3				
Ambient / fluid temperatures °C	5 (41°F) to 60 (140°F) *4				
Filtration rating μm	5		5 or 0.3		
Set pressure (*2) MPa	0.05 to 0.85 *1	0.05 (≈7.3 psi, 0.5 bar) to 0.85 (≈120 psi, 8.5 bar)			
Pressure relief	With relief mechanism				
Drain capacity cm^3	12	25	45	80	80 (*5)
Port size Rc,NPT,G	1/8, 1/4 (3/8 uses an adaptor)	1/4, 3/8 (1/2 uses an adaptor)	1/4,3/8,1/2	1/4, 3/8, 1/2 (3/4 uses an adaptor)	3/4, 1 (1 1/4 uses an adaptor)
Weight kg	0.175	0.40	0.6	0.9	2.0
Standard accessories	Pressure gauge and bowl guard				

*1: In the case of "F" with auto-drain, the min. working pressure of auto-drain is 0.1 MPa. Air is purged with initial drainage until pressure reaches 0.1 MPa.
*2: In the case of "F1" with auto-drain, the min. working pressure of auto-drain is 0.15 MPa.
*3: When using W1100 Series "F1" with auto-drain, the min. working pressure is 0.2 MPa, the max. working pressure is 0.7 MPa and the proof pressure is 1.05 MPa. For the max. working flow rate, refer to the max. working flow rate table of F1000-F1 with auto-drain (page 106). Set the working flow rate to less than or equal to the max. working flow rate.
*4: The ambient / fluid temperatures for "RN" or "RP" (pressure switch with display PPR is mounted) and "R2" (digital pressure sensor PPX is attached) is 5 to 50°C.
*5: Up to 170m^3 is stored with the manual drain cock only.
*6: Check that the primary pressure is at least 0.05 MPa more than the secondary pressure.
*7: Refer to the set pressure range for the back pressure given on page 100 when selecting the model.
*8: W2100-W Series with "F1" (with auto-drain) must be used at equal to or less than the max. working flow rate. (Refer to the F2000-W section on page 106 for max. flow rate.)

Option weight

* Add to the weight of the standard accessories.

Unit: kg

Code	Drain discharge				Bowl material		Pressure gauge		Pipe adaptor set			
	F	F1	FF	FF1	M	M1	T*	RN/RP	A6*W	A8*W	A10*W	A15*W
W1100		0.007					0	0.04	0.09	0.09	0.09	
W2100		0.02				0.1	0			0.16	0.16	0.16
W3100	0.02	0.02			0.1	0.1	0	0.04		0.16	0.16	0.16
W4100	0.02	0.02			0.1	0.1	0	0.04		0.16	0.16	0.16
W8100	0.02	0.02	0.02	0.02	0.1	0.1	0	0.04				

Code	Pipe adaptor set			Attachment							
	A20*W	A25*W	A32*W	BW	B3W	G45P	G49P	G59P	G40P	G52P	R2
W1100				0.1	0.04	0.074	0.086	0.115	0.085	0.15	0.04
W2100				0.15	0.06	0.074	0.086		0.085	0.15	0.04
W3100				0.17	0.07	0.074	0.086	0.115	0.085	0.15	0.04
W4100	0.16			0.21	0.11	0.074	0.086	0.115	0.085	0.15	0.04
W8100	0.53	0.53	0.53	0.36		0.074	0.086	0.115	0.085	0.15	0.04

Ozone-proof specs (Ending Page 11)

W*100 - … - W - … - P11

Clean-room specs (Catalog No. CB-033SA)

● Anti-dust generation structure for use in cleanrooms

W*100 - … - … - … - P7*

Specs for rechargeable battery (Catalog No. CC-1226A)

● Structure compatible with rechargeable battery manufacturing process

W*100 - ……- P4*

How to order

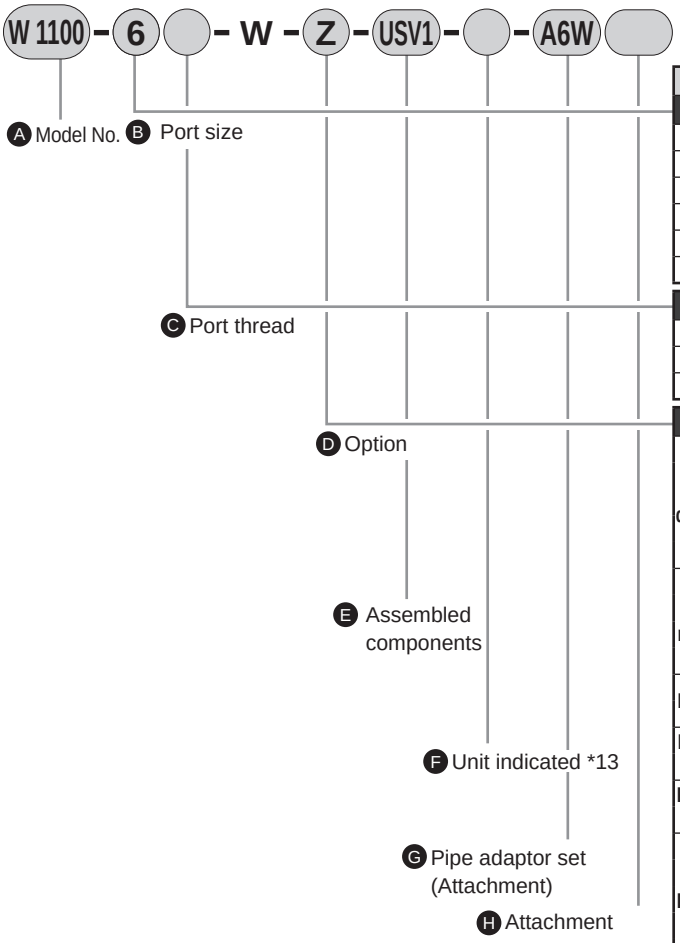

* Refer to page 30 for the explanation of the option.

Code	Description	A Model No. W1100	W2100	W3100	W4100	W8100
B Port size						
6	1/8	●				
8	1/4	●	●	●	●	
10	3/8		●	●	●	
15	1/2			●	●	
20	3/4					●
25	1					●
C Port thread						*1
Blank	Rc thread	●	●	●	●	●
N	NPT thread	●	●	●	●	●
G	G thread	●	●	●	●	●
D Option						*2, *3
Drain discharge *4	Blank: Manual drain cock	●	●	●	●	●
	F: Auto-drain with manual override (NO: Exhaust when not pressurized)			●	●	●
	F1: Auto-drain with manual override (NC: No exhaust when not pressurized)	●	●	●	●	●
	FF: Large auto-drain with manual override (NO: Exhaust when not pressurized)					●
	FF1: Large auto-drain with manual override (NC: No exhaust when not pressurized)					●
Bowl material	Blank: Polycarbonate bowl	●	●	●	●	●
	Z: Nylon bowl	●	●	●	●	●
	M: Metal bowl			●	●	●
	M1: Metal bowl with manual drain cock		●	●	●	●
Element	Blank: 5 µm	●	●	●	●	●
	Y: 0.3 µm (submicron) *5			●	●	●
Pressure range	Blank: 0.05 to 0.85 MPa	●	●	●	●	●
	L: 0.05 to 0.35 MPa *6	●	●	●	●	●
Pressure relief	Blank: With relief mechanism	●	●	●	●	●
	N: Non-relief	●	●	●	●	●
Pressure gauge	Blank: With standard pressure gauge (G401-W)	●	●	●	●	●
	T: No pressure gauge (gauge port (1/4) is assembled sealed)	●	●	●	●	●
	T8: Pressure gauge ready (gauge port (1/4) is left open)	●	●	●	●	●
	T6: Digital pressure sensor PPX attachment option *7	●	●	●	●	●
	RN: Pressure switch with display, PPR assembled (NPN output 1 point)	●		●	●	●
	RP: Pressure switch with display, PPR assembled (PNP output 1 point)	●		●	●	●
Flow direction	Blank: Standard flow (left → right)	●	●	●	●	●
	X1: Reverse flow (right → left)	●	●	●	●	●
E Assembled components						
U *14	Assembled component type *8	●	●	●	●	
Assembled components: S	Pressure switch (P1100-W, P4100-W)	●	●	●	●	
Assembled components: V1	Residual pressure exhaust valve (V1000-W, V3000-W)	●	●	●	●	
Assembled components: SV1	Pressure switch (P1100-W, P4100-W) + Residual pressure exhaust valve (V1000-W, V3000-W)	●	●	●	●	
F Unit indicated						
Blank	MPa display (Rc thread), psi display (NPT thread), bar display (G thread)	●	●	●	●	●
J1	MPa display (NPT, G threads)	●	●	●	●	●
G Pipe adaptor set (attachments)						*9, *10 Page 350
Blank	Not included	●	●	●	●	●
A6*W	1/8 pipe adaptor set	●				
A8*W	1/4 pipe adaptor set	●	●	●	●	
A10*W	3/8 pipe adaptor set	●	●	●	●	
A15*W	1/2 pipe adaptor set		●	●	●	
A20*W	3/4 pipe adaptor set				●	●
A25*W	1 pipe adaptor set					●
A32*W	1 1/4 pipe adaptor set					●
*** Adaptor thread**						
Blank	Rc thread	●	●	●	●	●
N	NPT thread	●	●	●	●	●
G	G thread	●	●	●	●	●
H Attachment						*11 Pages 346 and 363
Blank	Not included	●	●	●	●	●
BW	C-bracket	●	●	●	●	●
B3W	L-bracket *12	●	●	●	●	
G45P	G45D-8-P10 (L: G45D-8-P04)	●	●	●	●	●
G49P	G49D-8-P10(L:G49D-8-P04)	●	●	●	●	●
G59P	G59D-8-P10(L:G59D-8-P04)	●		●	●	●
G40P	G40D-8-P10(L:G40D-8-P04)	●	●	●	●	●
G52P	G52D-8-P10(L:G52D-8-P10)	●	●	●	●	●
R2 *7	Digital pressure sensor: PPX-R10N-6M	●	●	●	●	●

⚠ Precautions for model No. selection

*1: G threads and NPT threads are available for IN, OUT, gauge port and drain outlet (metal bowl with auto-drain).

*2: Select options for the drainage, bowl material, element, and regulator.
When selecting options for several items, list options in order from the top.

*3: **Positions of check valve and pressure gauge cannot be changed.**
If the IN and OUT directions must be reversed, indicate "X1" at the end of the option field.

*4: Refer to page 354 for the auto-drain usage conditions.

*5: Refer to page 108 for max. processing flow rate when option "Y" is selected.

*6: The pressure gauge's indication range is 0 to 0.4 MPa for the option "L".

*7: When the option "T6" is selected, only "Blank" or "R2" can be selected for G Other attachments. The digital pressure sensor PPX mounting port (Rc1/8) is left open.

*8: Installation position for assembled components

Code	Installation position for attachments	Compatibility
S	W+(S)	W1100-W to W4100-W
V1	(V1)+W	W1100-W to W4100-W
SV1	(V1)+W+(S)	W1100-W to W4100-W

*9: The pipe adaptor set and C-bracket cannot be used together.

*10: The joiner set is enclosed with the pipe adaptor set.

*11: The pressure gauge and digital pressure sensor (included) can be selected only when C Port thread is Rc thread.

*12: For details on mounting the L-bracket, refer to (2. Regulator) of "⚠ Cautions and Installation & Adjustment" (page 357).

*13: Display unit options when selecting NPT threads: If Blank is selected, the pressure unit is psi and the temperature display unit is °F.
When G thread and Blank display unit option are selected, the pressure unit will be bar and the temperature display unit will be °C.
When NPT/G thread and "J1" display unit option are selected, the pressure unit will be MPa and the temperature display unit will be °C.

*14: Assembled components can be selected only with port size and drain discharge options. When selecting other options, they are handled as customized combinations.

Flow characteristics

● W1100-6-W

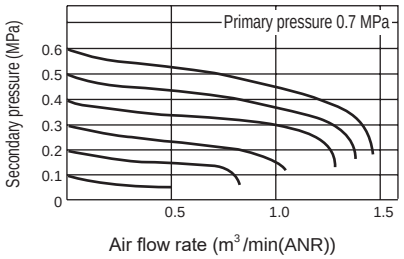

● W1100-8-W

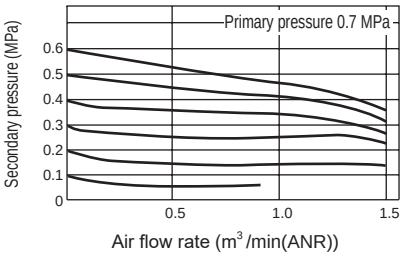

● W2100-8-W

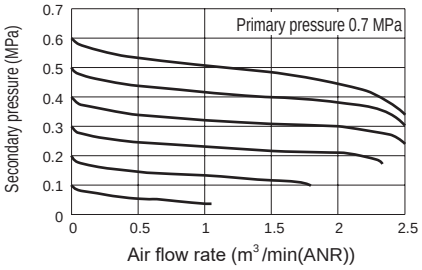

● W2100-10-W

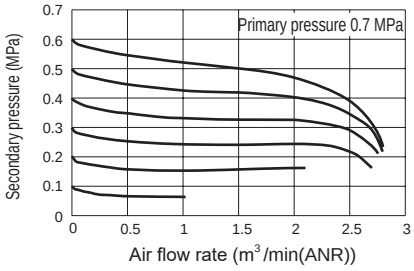

● W3100-8-W

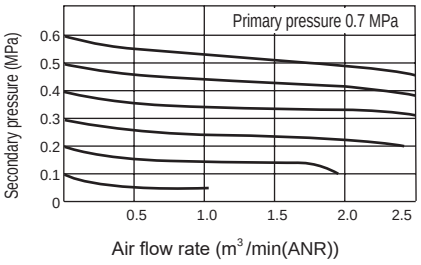

● W3100-10-W/W3100-15-W

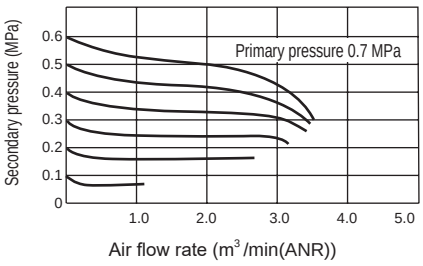

● W4100-8-W

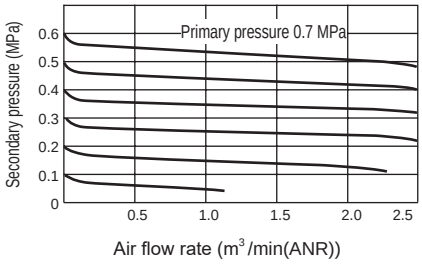

● W4100-10-W

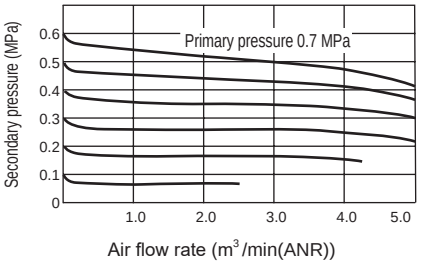

● W4100-15-W

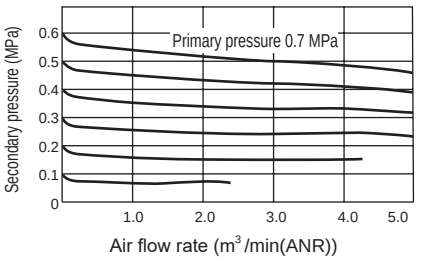

● W8100-20-W

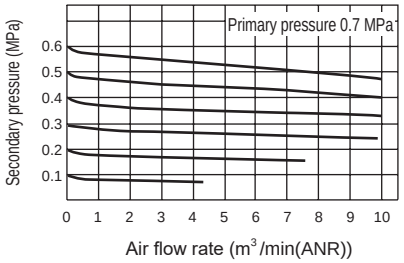

● W8100-25-W

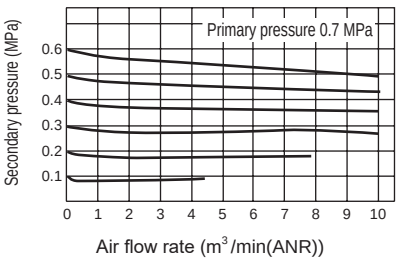

● Set pressure range to back pressure

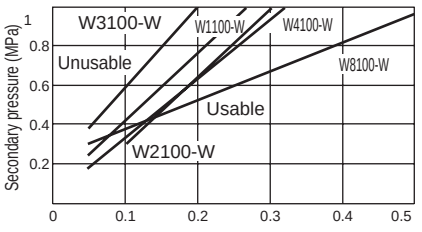

Note:The area above the graph line shows the unusable range and that below the graph line shows the usable range.

Example:If the set pressure of W4100-W is set to 0.2MPa and the secondary back pressure is set to 0.6MPa or more, the secondary side pressure will not be released to the primary side.

Pressure characteristics

● W1100-W

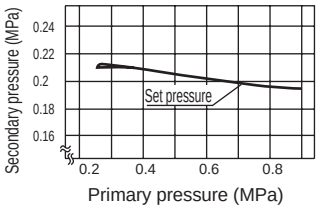

● W2100-W

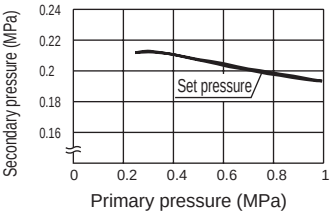

● W3100-W

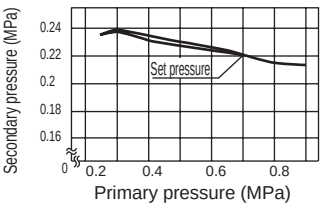

● W4100-W

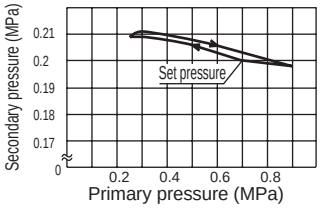

● W8100-W

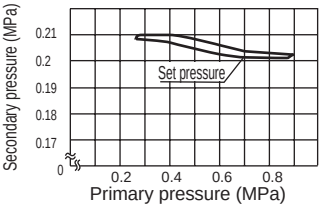

Internal structure and parts list

● W1100-W

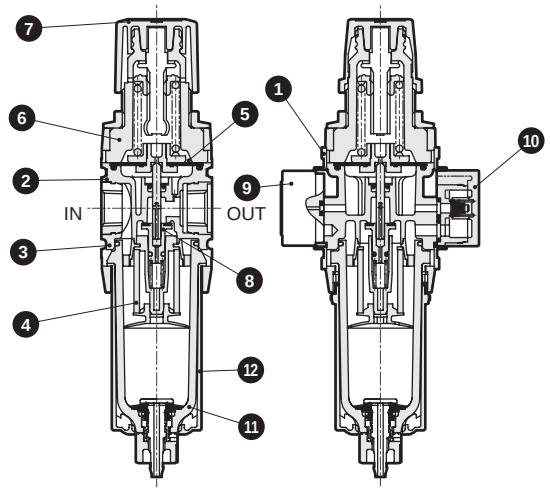

● W2100-W

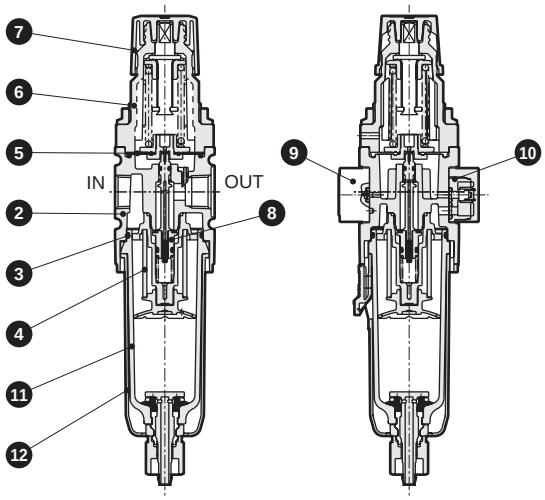

● W3100-W/W4100-W

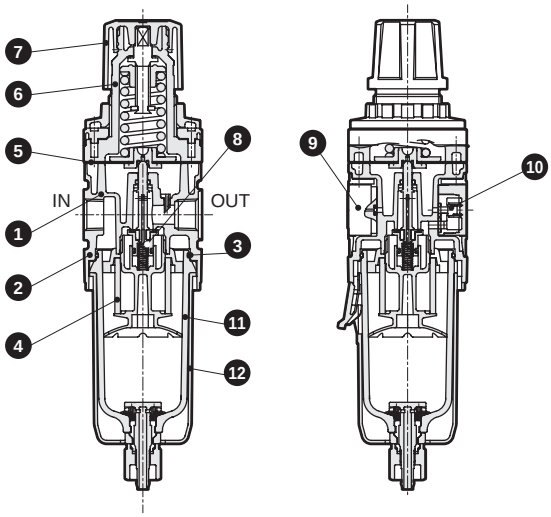

● W8100-W

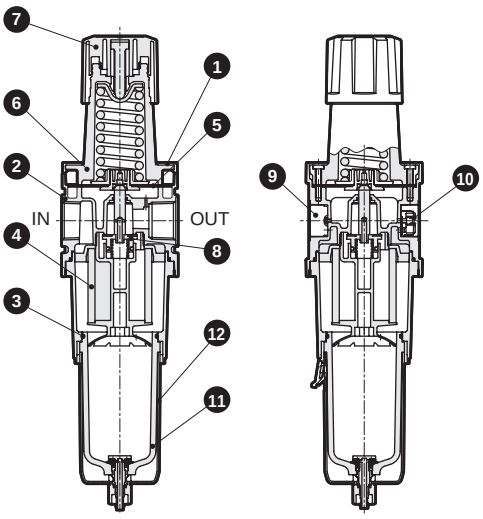

No.	Part name	Material				
		W1100-W	W2100-W	W3100-W	W4100-W	W8100-W
1	Plate cover	ABS resin	-	ABS resin		
2	Body	PA resin, steel	Aluminum alloy die-casting			
3	O-ring *2	Special nitrile rubber				
4	Element *1	Polyacetal resin polypropylene	Polypropylene			
5	Diaphragm assembly	Polyacetal resin nitrile rubber		Zinc alloy die-casting, nitrile rubber		
6	Cover	Polyamide resin	PBT resin			Alum die-cast
7	Knob	Polyacetal resin				
8	Valve assembly	CU alloy, HNBR (POM resin: W2100-W, W3100-W, W4100-W)				
9	Pressure gauge assembly	PBT resin, polyacetal resin, polycarbonate resin, nitrile rubber, copper alloy, steel				
10	Check valve total assembly	PBT resin, nitrile rubber, stainless steel wire, steel				
11	Bowl assembly	Polycarbonate resin, polyacetal resin, urethane resin				
12	Bowl guard	Polyamide resin	Polyamide resin, steel			

*1: The W1100-W has an assembled element.
*2: The O-ring of the W1100-W has a special shape.
*3: Refer to page 105 for repair parts kit model No.

Functions

When the primary pressure is introduced from the IN side, the check valve functions as a regular regulator because it closes with primary pressure and spring load. When primary pressure is released by a switching valve such as a residual pressure exhaust valve, the check valve opens with secondary pressure. Pressure in the diaphragm chamber is released and pressure drops. This causes the diaphragm to be pressed down by the pressure adjustment spring. The main valve (valve assembly) opens, and the air on the OUT side is discharged.

Note: When the primary side pressure is released, back pressure A must be equal to or less than the set pressure of the regulator corresponding to the back pressure shown in the graph. (Refer to page 100 for the graph)

● Circuit diagram

Residual pressure exhaust valve

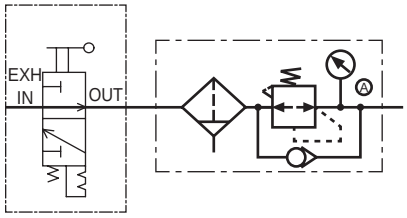

When using residual pressure exhaust valve in front of reverse filter and regulator.

Dimensions CAD

● W1100-W

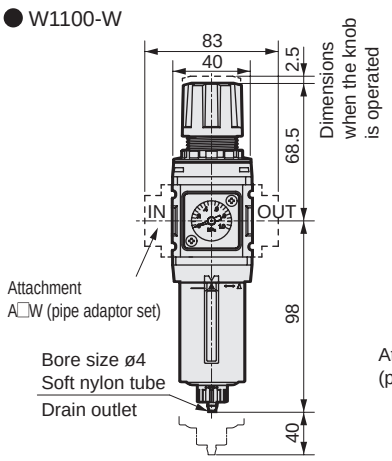

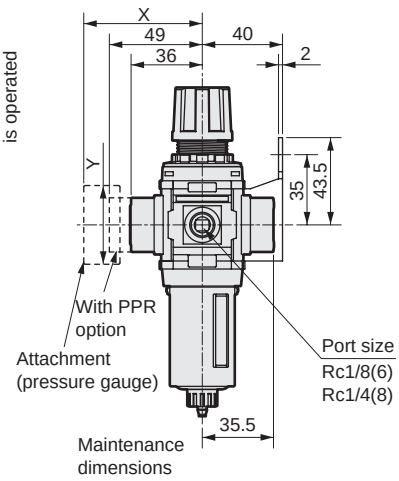

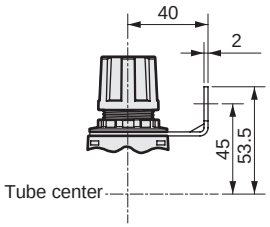

· Dimensions of options
With auto-drain (F1)

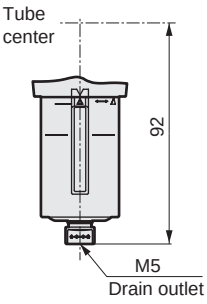

Panel cut dimension

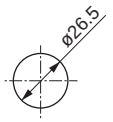

Panel plate thickness: max. 6 mm

· Attachment
C-bracket (-BW)
Part model No.: B120
· Material: Steel
Zinc plated

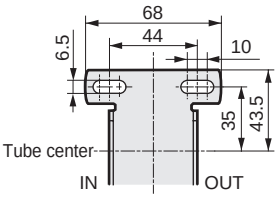

L-bracket (-B3W)
Part model No.: B130
· Material: Steel
Zinc plated

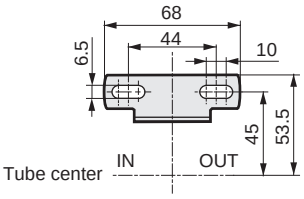

Pressure gauge attached optional dimensions table

Pressure gauge	X	Y
G45P	(74)	ø39
G49P	(73.5)	ø43.5
G59P	(76)	ø52
G40P	(75.5)	ø42.5
G52P	(86)	ø52.5
R2	(74)	□30

● W2100-W

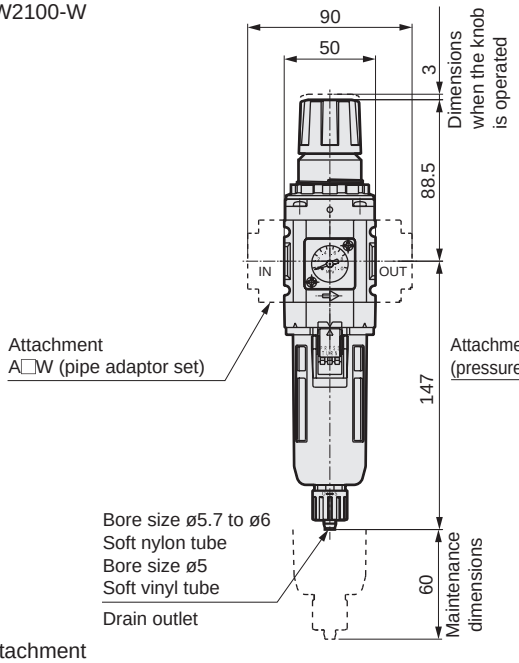

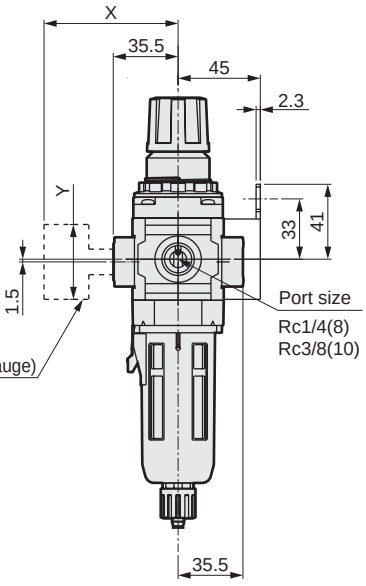

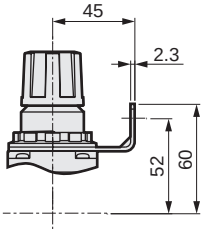

Panel cut dimension

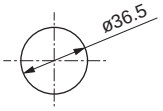

Panel plate thickness: max. 4 mm

· Attachment
C-bracket (-BW)
Part model No.: B220
· Material: Steel
Zinc plated

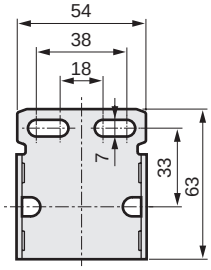

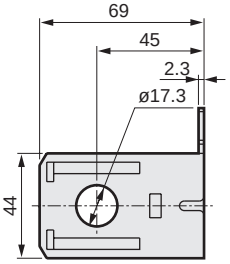

L-bracket (-B3W)
Part model No.: B230
· Material: Steel
Zinc plated

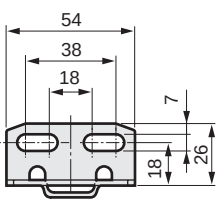

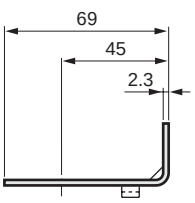

Pressure gauge attached optional dimensions table

Pressure gauge	X	Y
G45P	(73.5)	ø39
G49P	(73)	ø43.5
G40P	(75)	ø42.5
G52P	(85.5)	ø52.5
R2	(73)	□30

Dimensions CAD

● W3100-W

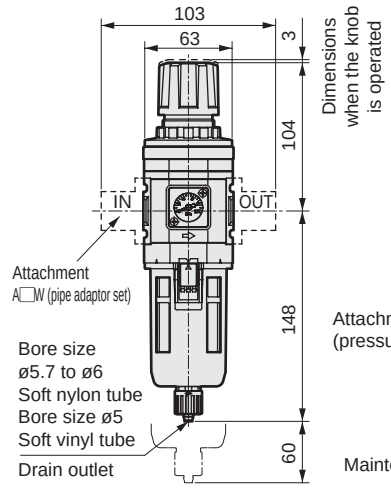

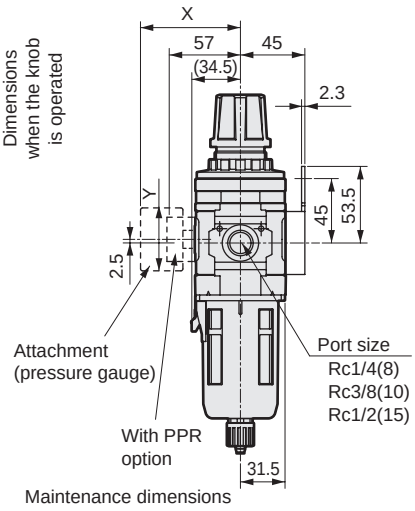

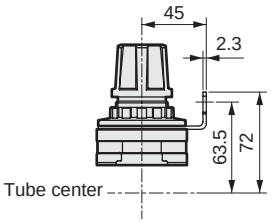

Panel cut dimension

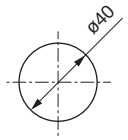

Panel plate thickness: max. 4 mm

· Attachment
C-bracket (-BW)
Part model No.: B320
· Material: Steel
Zinc plated

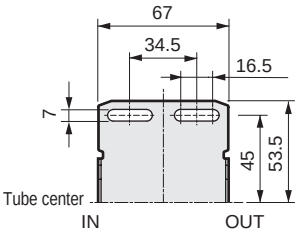

L-bracket (-B3W)
Part model No.: B330
· Material: Steel
Zinc plated

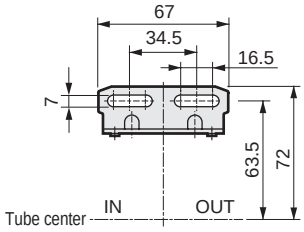

● For the plastic bowl, the dimensions of the manual cock and the auto-drain are the same.

Pressure gauge attached optional dimensions table

Pressure gauge	X	Y
G45P	(70)	ø39
G49P	(69.5)	ø43.5
G59P	(72)	ø52
G40P	(71.5)	ø42.5
G52P	(82)	ø52.5
R2	(69.5)	□30

● W4100-W

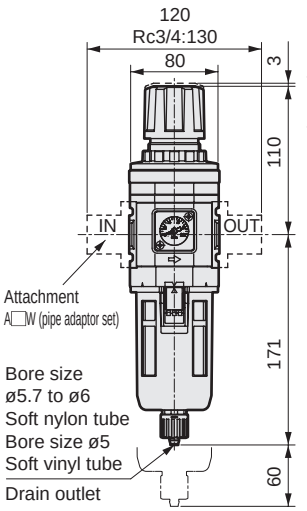

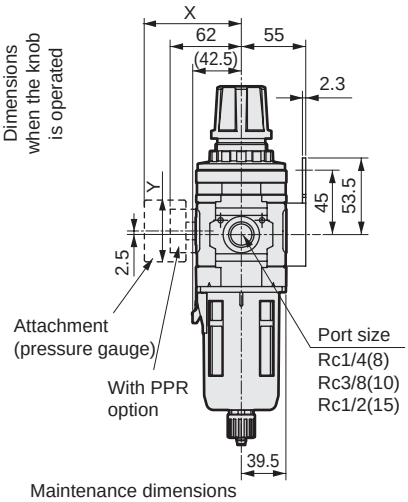

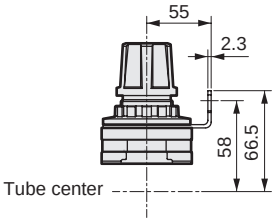

Panel cut dimension

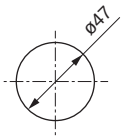

Panel plate thickness: max. 7 mm

· Attachment
C-bracket (-BW)
Part model No.: B420
· Material: Steel
Zinc plated

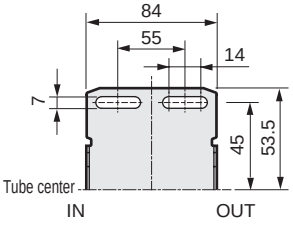

L-bracket (-B3W)
Part model No.: B430
· Material: Steel
Zinc plated

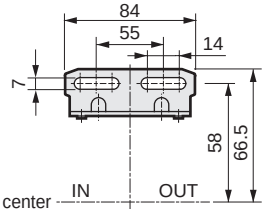

● For the plastic bowl, the dimensions of the manual cock and the auto-drain are the same.

Pressure gauge attached optional dimensions table

Pressure gauge	X	Y
G45P	(75)	ø39
G49P	(74.5)	ø43.5
G59P	(77)	ø52
G40P	(76.5)	ø42.5
G52P	(86)	ø52.5
R2	(75)	□30

Dimensions CAD

● W8100-W

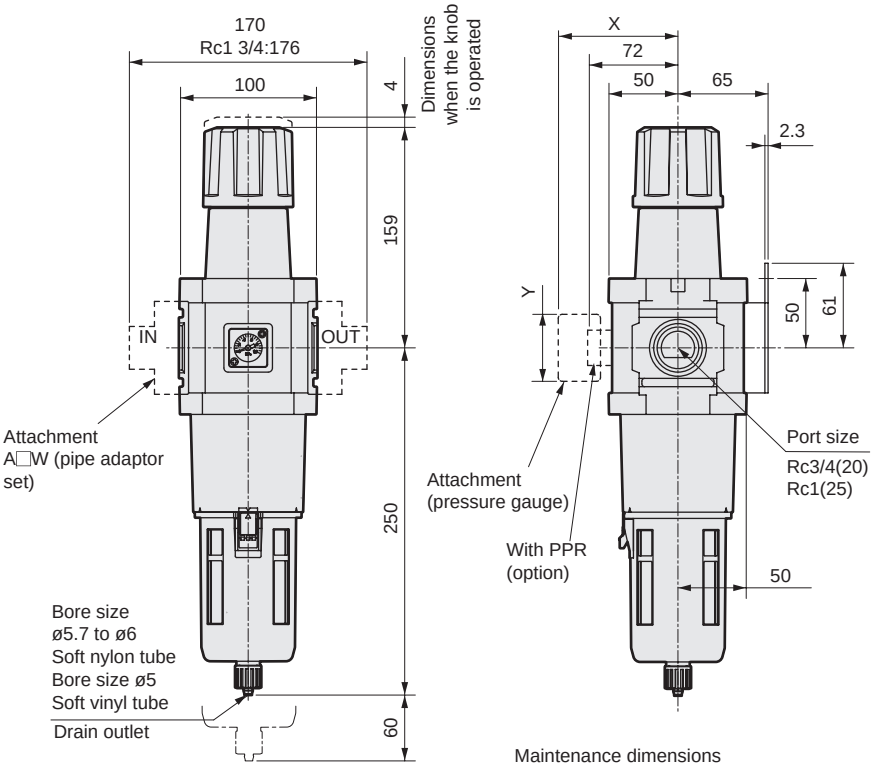

Maintenance dimensions

● For the plastic bowl, the dimensions of the manual cock and the auto-drain are the same.

· Attachment
C-bracket (-BW)
Part model No.: B820
· Material: Steel
Zinc plated

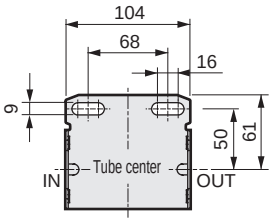

Pressure gauge attached optional dimensions table

Pressure gauge	X	Y
G45P	(85)	ø39
G49P	(84.5)	ø43.5
G59P	(87)	ø52
G40P	(86.5)	ø42.5
G52P	(98)	ø52.5
R2	(85)	□30

Option assembly dimensions

● W1100-W to W4100-W

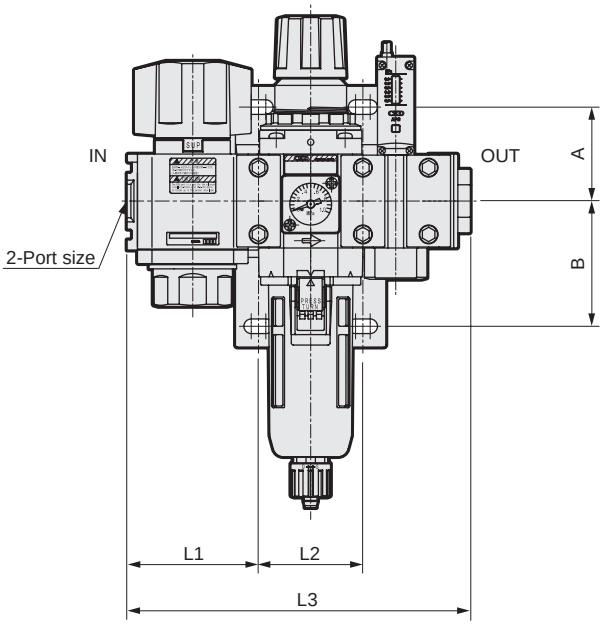

Assembled option / Model No.	S			V1			SV1			A	B
	L1	L2	L3	L1	L2	L3	L1	L2	L3		
W1100-W	40	28	89.5	40	-	80	40	40	130	35	45
W2100-W	50	31.5	102	63	-	113	63	50	165	45	60
W3100-W	63	31.5	115	63	-	126	63	63	178		
W4100-W	80	31.5	132	63	-	143	63	80	195		

Optional dimensions

● Metal bowl W2100-W/W3100-W/W4100-W/W8100-W (option)

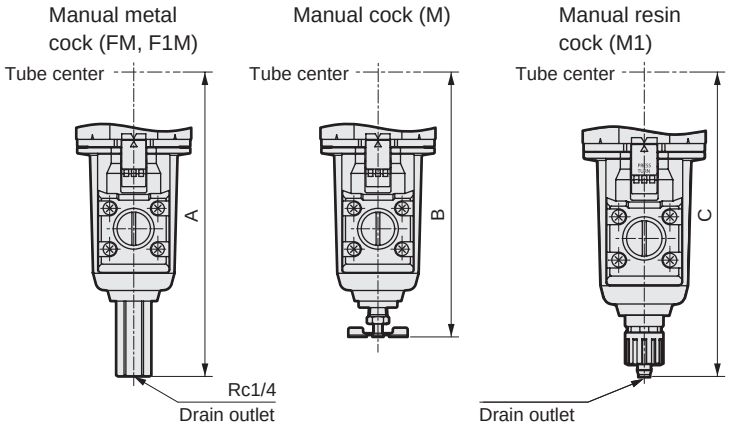

● Material of the metal bowl is aluminum die-casting.

Dimensions table

Model No.	F1M	M	M1
	A	B	C
W2100-W	-	-	147
W3100-W	163.5	143.5	154
W4100-W	187	166.5	177
W8100-W	266	245.5	256

Optional parts diagram

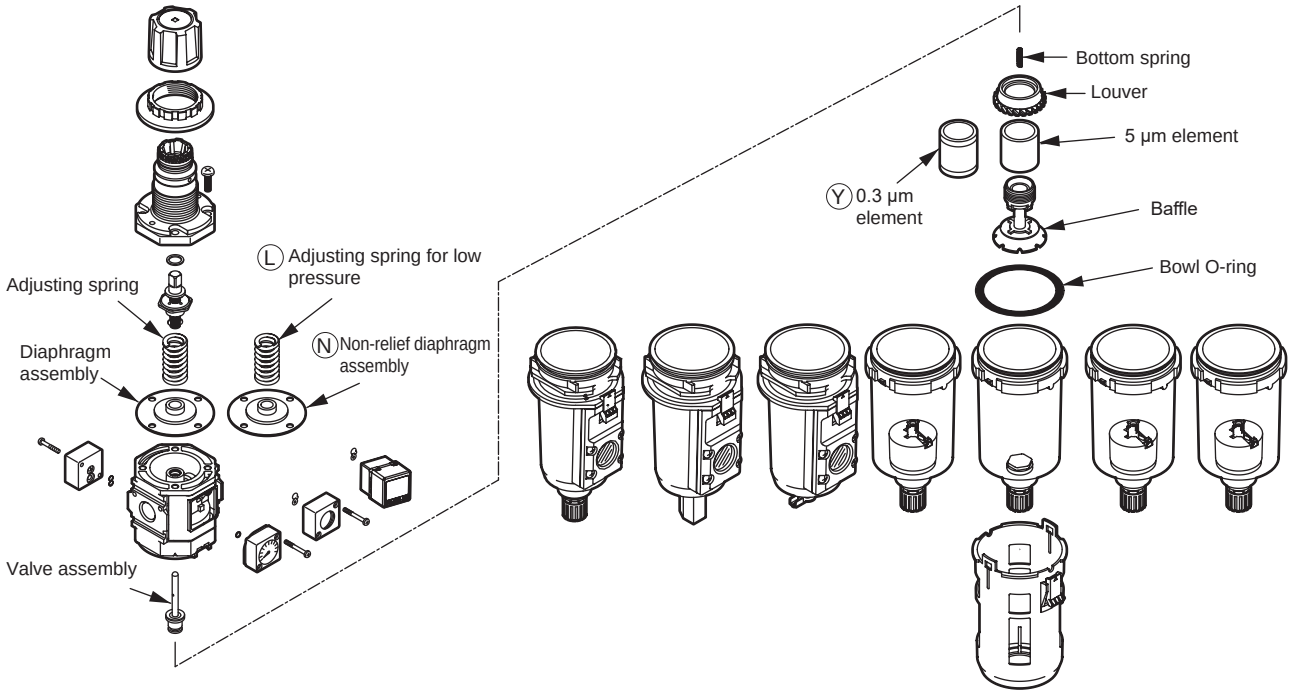

Repair parts kit (set of diaphragm assembly, valve assembly, bottom spring, louver, element, baffle, bowl O-ring)

Repair parts kits model No. / Model	Relief diaphragm 5 µm element (blank)	Non-relief diaphragm 5 µm element (N)	Relief diaphragm 0.3 µm element (Y)	Non-relief diaphragm 0.3 µm element (NY)
W1000-W,W1100-W	W1000-KIT	W1000-KIT-N	-	-
W2000-W,W2100-W	W2000-KIT	W2000-KIT-N	-	-
W3000-W,W3100-W	W3000-KIT	W3000-KIT-N	W3000-KIT-Y	W3000-KIT-NY
W4000-W,W4100-W	W4000-KIT	W4000-KIT-N	W4000-KIT-Y	W4000-KIT-NY
W8000-W,W8100-W	W8000-KIT	W8000-KIT-N	W8000-KIT-Y	W8000-KIT-NY

Note: With the W1000-W and W1100-W, the element and baffle are assembly parts, and the louver is assembled onto the body. These parts are excluded from repair parts.

Valve assembly (set of valve assembly and bottom spring)

Model	Valve assembly model No.
W1000-W,W1100-W	W1000-VALVE-ASSY
W2000-W,W2100-W	W2000-VALVE-ASSY
W3000-W,W3100-W	W3000-VALVE-ASSY
W4000-W,W4100-W	W4000-VALVE-ASSY
W8000-W,W8100-W	W8000-VALVE-ASSY

* Refer to the regulator options and parts table (page 151) for details on the adjusting spring, diaphragm, and gauge plug assembly. Refer to the air filter options and parts table (pages 114 and 115) for details on the element, bowl assembly, and bowl guard.



Air filter Standard White Series

F1000/F2000/F3000 F4000/F6000/F8000-W Series

New Series of 5 µm element for dust removal, and 0.3 µm element for tar removal. (excluding F1000 Series) ● Port size: 1/8 to 1

JIS symbol 

RoHS CAD

Specifications

Item	F1000-W	F2000-W	F3000-W	F4000-W	F6000-W	F8000-W
Appearance						
Working fluid	Compressed air					
Max. working pressure MPa	1.0 (≈150 psi, 10 bar) *1, 2, 3					
Proof pressure MPa	1.5 (≈220 psi, 15 bar) *1					
Ambient / fluid temperatures °C	5 (41°F) to 60 (140°F)					
Filtration rating µm	5		5 or 0.3			
Drain capacity cm^3	12	25	45	80	80	80 (*4)
Port size Rc,NPT,G	1/8,1/4 (3/8 uses an adaptor)	1/4,3/8 (1/2 uses an adaptor)		1/4,3/8,1/2 (3/4 uses an adaptor)	3/4,1 (1 1/4 uses an adaptor)	3/4,1 (1 1/4 uses an adaptor)
Weight kg	0.087	0.24	0.25	0.45	0.9	1.16
Standard accessories	Bowl guard					

*1: When using F1000-W Series "F1" with auto-drain, the min. working pressure is 0.2 MPa, max. working pressure is 0.7 MPa and proof pressure is 1.05 MPa. Refer to the max. working flow rate table (table below) for F1000-W-F1 auto-drain for the max. working flow rate. Set the working flow rate to less than or equal to the max. working flow rate. When using F-2000W Series "F1" with auto-drain, refer to the max. working flow rate (table below). The working flow rate must be less than the max. working flow rate.
*2: In the case of "F" with auto-drain, the min. working pressure of auto-drain is 0.1 MPa. Air is purged with initial drain until pressure reaches 0.1 MPa.
*3: In the case of "F1" with auto-drain, the min. working pressure of auto-drain is 0.15 MPa.
*4: Up to 170 cm^3 is stored with the manual drain cock only.

● F1000-W-F1 with auto-drain Max. working flow rate

(m^3/min(ANR))

Primary pressure MPa / Port size	0.2	0.3	0.4	0.5	0.6	0.7
6	0.185	0.250	0.310	0.375	0.435	0.500
8	0.225	0.300	0.375	0.450	0.525	0.600

● F2000-W-F1 with auto-drain Max. working flow rate

(m^3/min(ANR))

Primary pressure MPa	0.15	0.2	0.3	0.4	0.5	0.6	0.7	0.8	0.9	1
Flow rate	0.50	0.60	0.80	1.00	1.20	1.40	1.65	1.85	2.05	2.25

Option weight

* Add to the weight of the standard accessories.

Unit: kg

Code	Drain discharge				Bowl material		Pipe adaptor set							Bracket
	F	F1	FF	FF1	M	M1	A6*W	A8*W	A10*W	A15*W	A20*W	A25*W	A32*W	BW
F1000		0.007					0.09	0.09	0.09					0.1
F2000		0.02				0.1		0.16	0.16	0.16				0.15
F3000	0.02	0.02			0.1	0.1		0.16	0.16	0.16				0.17
F4000	0.02	0.02			0.1	0.1		0.16	0.16	0.16	0.16			0.21
F6000	0.02	0.02			0.1	0.1					0.53	0.53	0.53	0.34
F8000	0.02	0.02	0.02	0.02	0.1	0.1					0.53	0.53	0.53	0.36

How to order

F1000 - 6 ○ - W - Z - ○ - A6W ○

Ⓐ Model No.
Ⓑ Port size
Ⓒ Port thread
Ⓓ Option
Ⓔ Display unit
Ⓕ Pipe adaptor set (included)
Ⓖ Bracket (included)

* Refer to page 30 for the explanation of the option.

Code	Description	Ⓐ Model No. F1000	F2000	F3000	F4000	F6000	F8000
Ⓑ Port size							
6	1/8	●					
8	1/4	●	●	●	●		
10	3/8		●	●	●		
15	1/2				●		
20	3/4					●	●
25	1					●	●
Ⓒ Port thread							*1
Blank	Rc thread	●	●	●	●	●	●
N	NPT thread	●	●	●	●	●	●
G	G thread	●	●	●	●	●	●
Ⓓ Option							*2
Drain discharge *3 — **Blank**	With manual drain cock	●	●	●	●	●	●
F	Auto-drain, man OVRD (NO: no press→Exhaust)			●	●	●	●
F1	Auto-drain, man OVRD (NC: no press→no exhaust)	●	●	●	●	●	●
FF	Large auto-drain, man OVRD (NO: no press→Exhaust)						●
FF1	Large auto-drain, man OVRD (NC: no press→no exhaust)						●
Bowl material — **Blank**	Polycarbonate bowl	●	●	●	●	●	●
Z	Nylon bowl	●	●	●	●	●	●
M	Metal bowl			●	●	●	●
M1	Metal bowl with manual drain cock		●	●	●	●	●
Element — **Blank**	5 µm	●	●	●	●	●	●
Y	0.3 µm (submicron)			●	●	●	●
Differential pressure detection — **Blank**	Without differential pressure detection port	●	●	●	●	●	●
Q	With differential pressure detection port (Rc 1/4)					●	●
Flow direction — **Blank**	Standard flow (left → right)	●	●	●	●	●	●
X1	Reverse flow (right → left)	●	●	●	●	●	●
Ⓔ Display unit							
Blank	MPa display (Rc thread), psi display (NPT thread), bar display (G thread)	●	●	●	●	●	●
J1	MPa display (NPT, G thread)	●	●	●	●	●	●
Ⓕ Pipe adaptor set (included)							*4, *5 Page 350
Blank	Not included	●	●	●	●	●	●
A6*W	1/8 pipe adaptor set	●					
A8*W	1/4 pipe adaptor set	●	●	●	●		
A10*W	3/8 pipe adaptor set	●	●	●	●		
A15*W	1/2 pipe adaptor set		●	●	●		
A20*W	3/4 pipe adaptor set				●	●	●
A25*W	1 pipe adaptor set					●	●
A32*W	1 1/4 pipe adaptor set					●	●
*** Adaptor thread**							
Blank	Rc thread	●	●	●	●	●	●
N	NPT thread	●	●	●	●	●	●
G	G thread	●	●	●	●	●	●
Ⓖ Bracket (included)							Page 346
Blank	Not included	●	●	●	●	●	●
BW	C type bracket	●	●	●	●	●	●

⚠ Precautions for model No. selection

*1: G threads and NPT threads are available for IN, OUT and drain outlet (metal bowl with auto-drain).
*2: Select options for the drainage, bowl material, element and differential pressure detection.
When selecting options for several items, list options in order from the top.
*3: Refer to page 354 for the auto-drain usage conditions.
*4: The pipe adaptor set and C type bracket cannot be used together.
*5: The joiner set is enclosed with the pipe adaptor set.

Clean-room specifications (Catalog No. CB-033SA)

● Anti-dust generation structure for use in cleanrooms

F*000 - ..... - P7*

Specifications for rechargeable battery (Catalog No. CC-1226A)

● Structure compatible with rechargeable battery manufacturing process

F*000 - ..... - P4*

Flow characteristics

● F1000-6-W

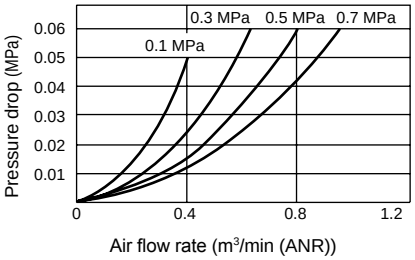

● F1000-8-W

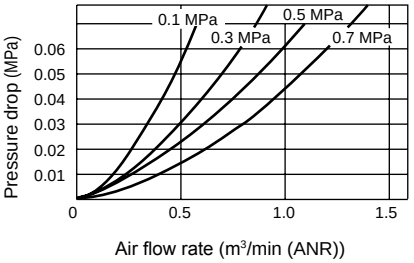

● F2000-8-W

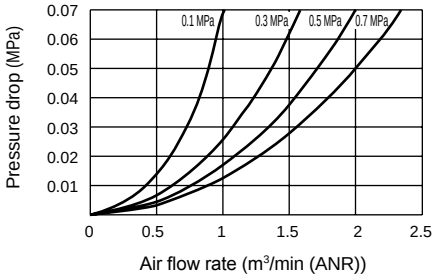

● F2000-10-W

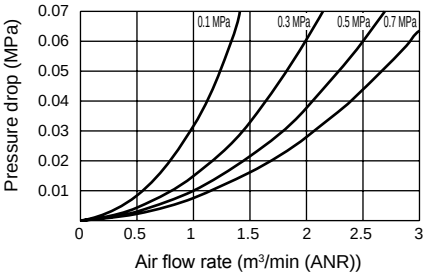

● F3000-8-W

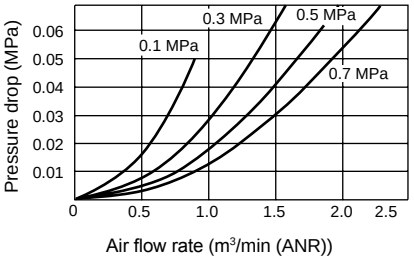

● F3000-10-W

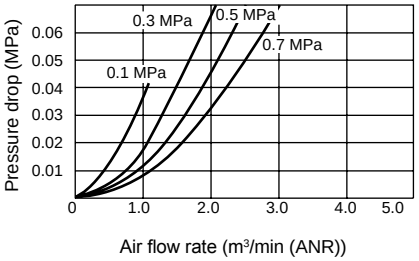

● F4000-8-W

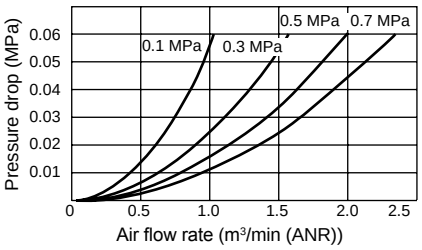

● F4000-10-W

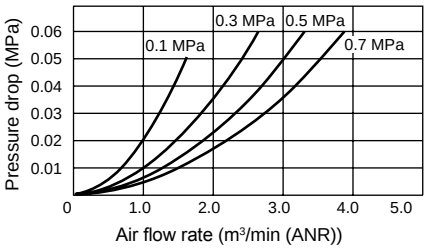

● F4000-15-W

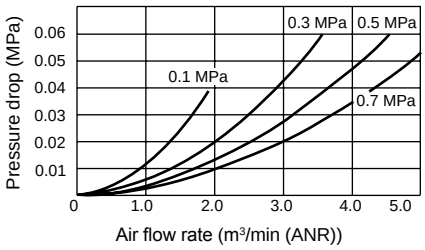

● F6000-20-W

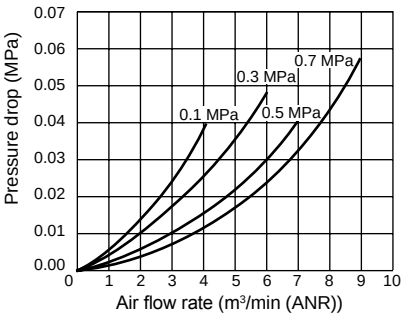

● F6000-25-W

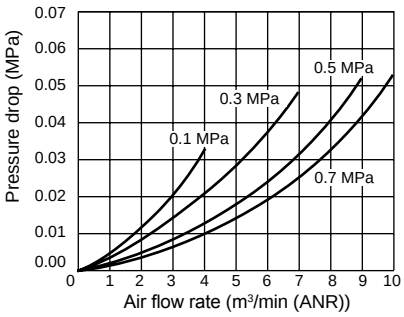

● F8000-20-W

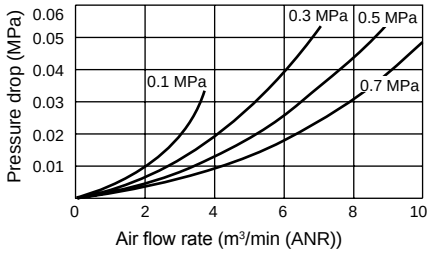

● F8000-25-W

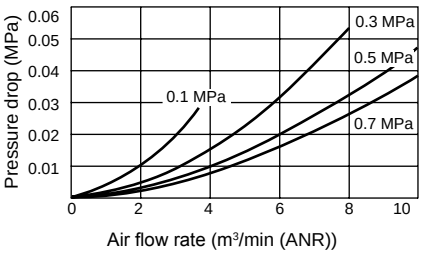

F3000
F4000
F6000
F8000

● -*-W-Y (0.3 μm element)

(Max. processing flow rate)

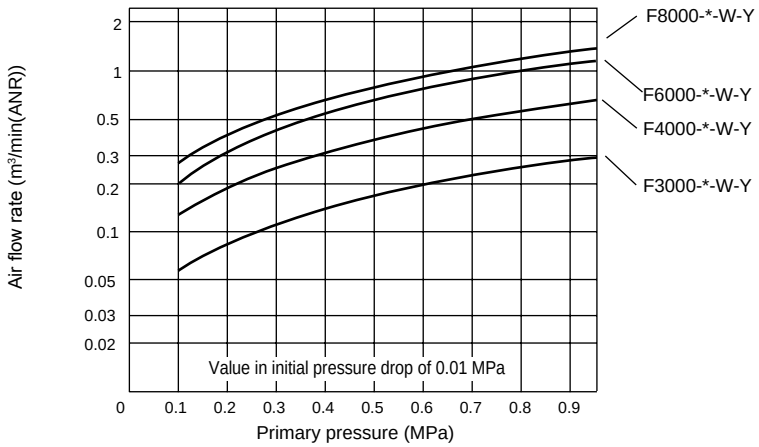

Internal structure and parts list

● F1000-W

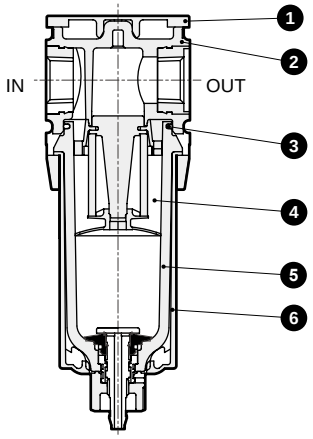

● F2000-W

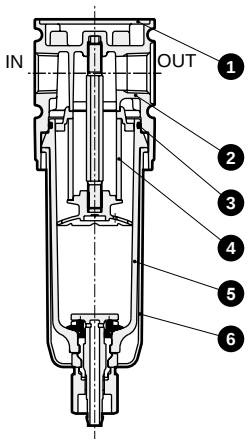

● F3000-W/F4000-W

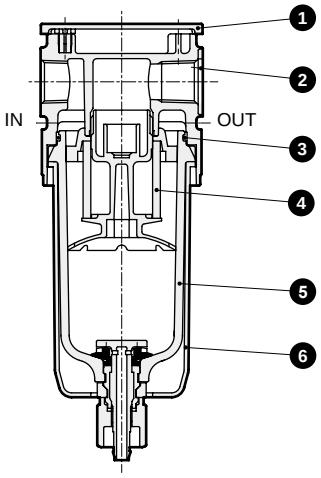

● F6000-W

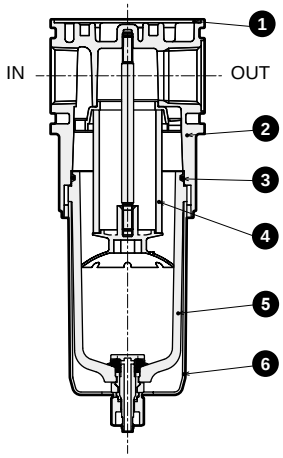

● F8000-W

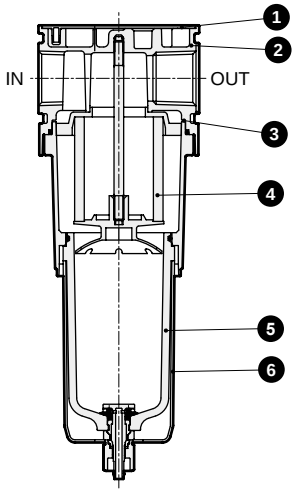

No.	Part name	Material					
		F1000-W	F2000-W	F3000-W	F4000-W	F6000-W	F8000-W
1	Plate cover	ABS resin					
2	Body	Polyamide resin, steel	Aluminum alloy die-casting				
3	O-ring *1	Special nitrile rubber					
4	Element (5 µm) *2	Polyacetal resin polypropylene	Polypropylene				
	Element (0.3 µm)			-			
5	Bowl assembly	Polycarbonate resin, polyacetal resin, urethane resin					
6	Bowl guard	Polyamide resin	Polyamide resin, steel				

*1: The O-ring of the F1000-W has a special shape.
*2: The F1000-W has an assembled element.
*3: Refer to page 114 for repair parts kits.

Dimensions CAD

● F1000-W

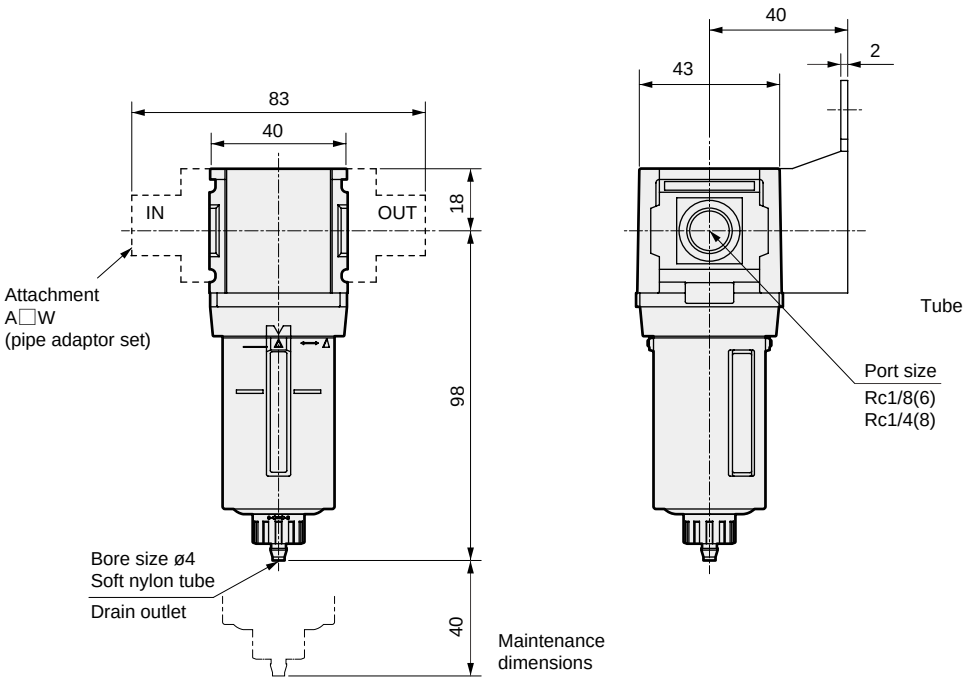

· Attachment
C type bracket (-BW)
Part model No.: B120
· Material: Steel
Zinc plated

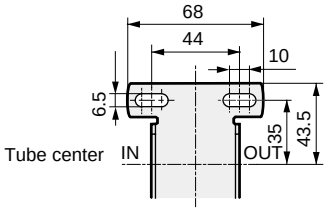

· Optional dimensions
With auto-drain (F1)

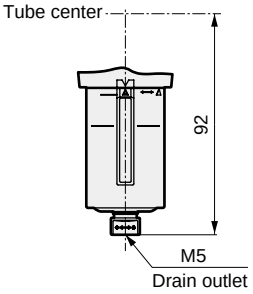

● F2000-W

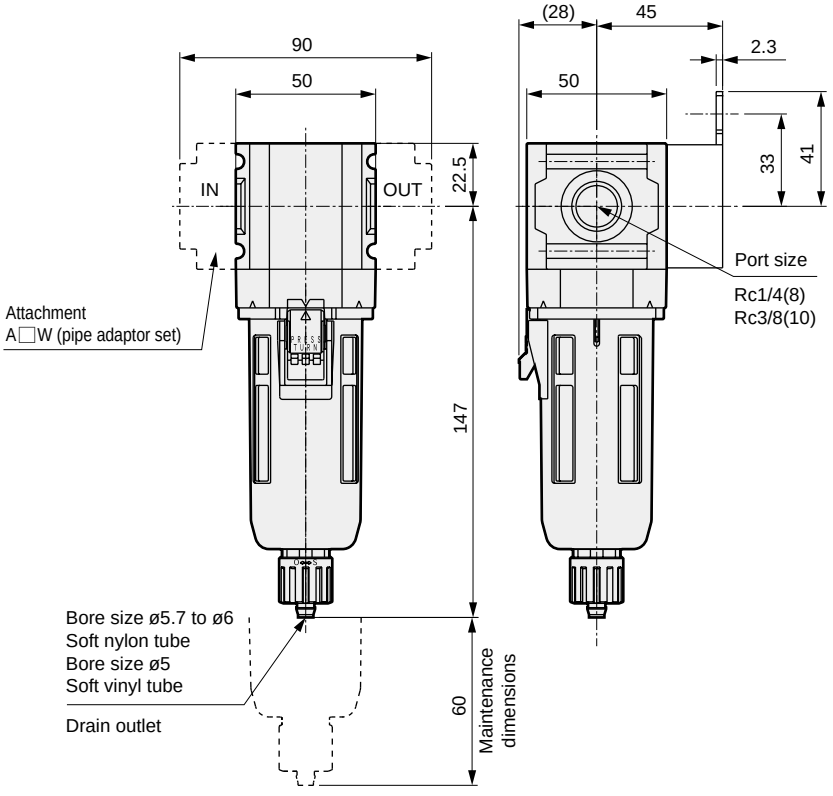

· Attachment
C type bracket (-BW)
Part model No.: B220
· Material: Steel
Zinc plated

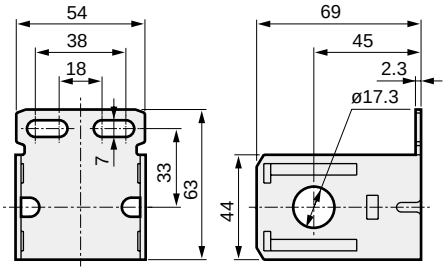

Dimensions

● F3000-W

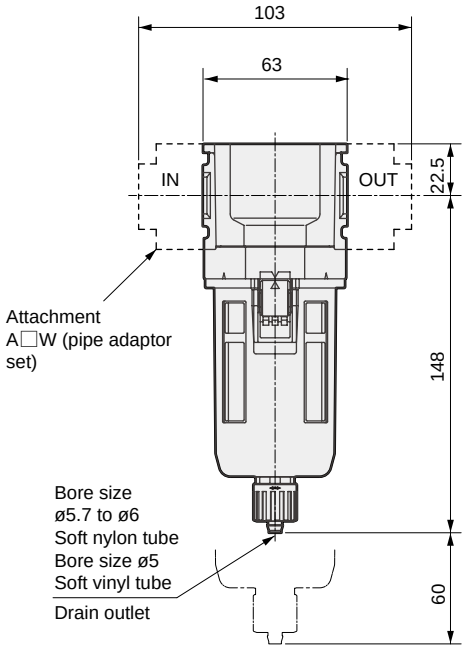

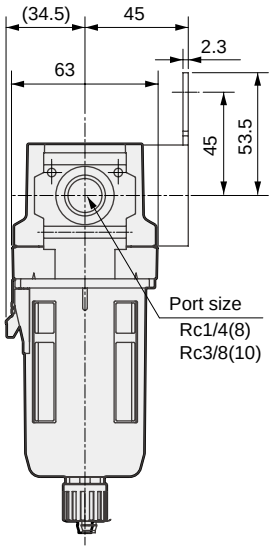

Maintenance dimensions

· Attachment
C type bracket (-BW)
Part model No.: B320
· Material: Steel
Zinc plated

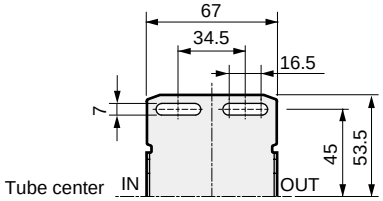

● For the plastic bowl, the dimensions of the manual cock and the auto-drain are the same.

Note: The C type bracket and pipe adaptor set attachments cannot be used together.

● F4000-W

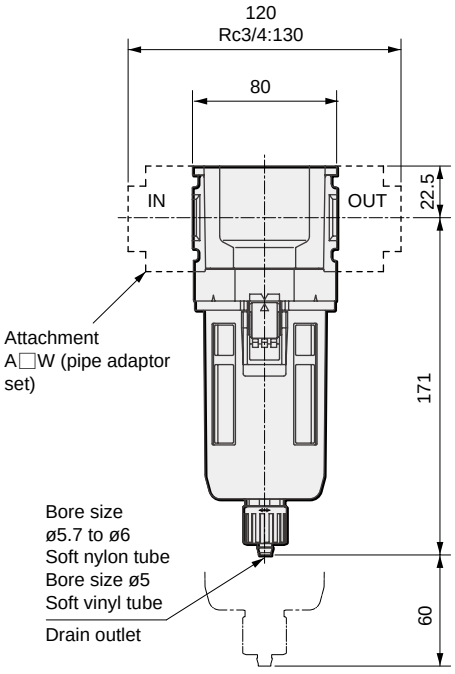

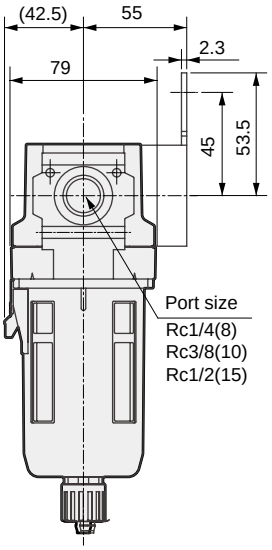

Maintenance dimensions

· Attachment
C type bracket (-BW)
Part model No.: B420
· Material: Steel
Zinc plated

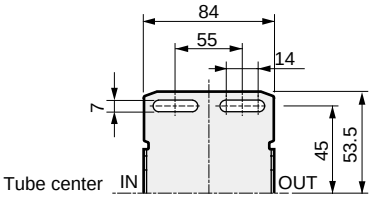

● For the plastic bowl, the dimensions of the manual cock and the auto-drain are the same.

Dimensions CAD

● F6000-W

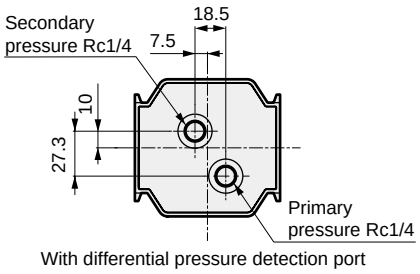

With differential pressure detection port

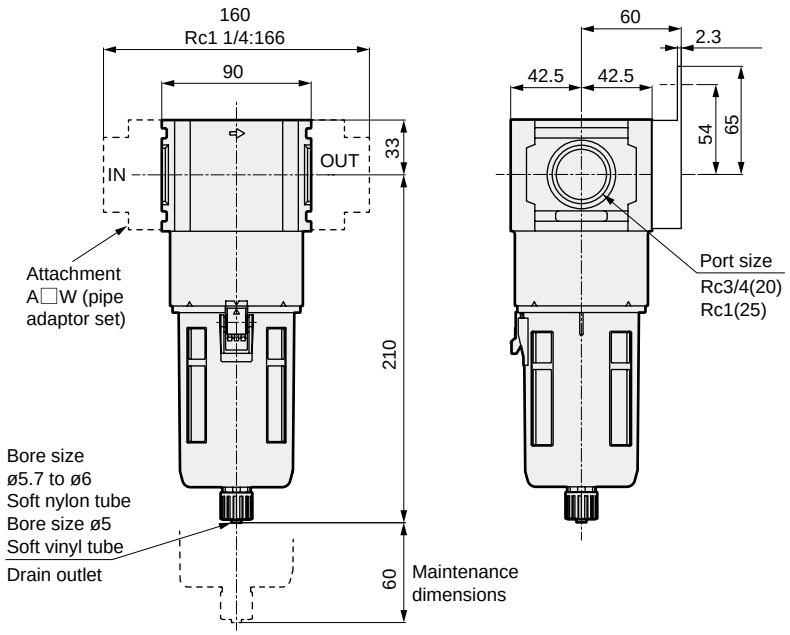

· Attachment
C type bracket (-BW)
Part model No.: B620
· Material: Steel
Zinc plated

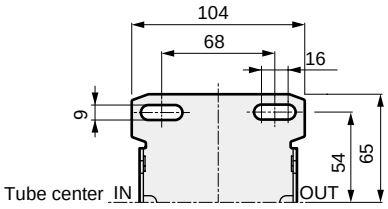

● F8000-W

With differential pressure detection port (Q)

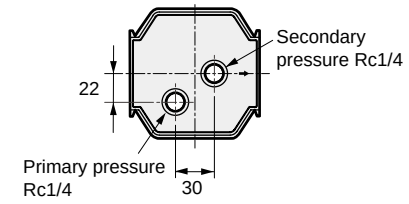

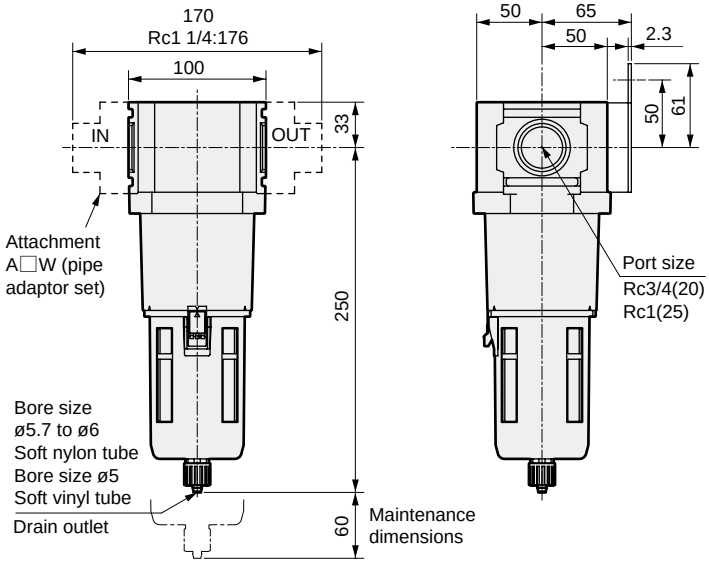

· Attachment
C type bracket (-BW)
Part model No.: B820
· Material: Steel
Zinc plated

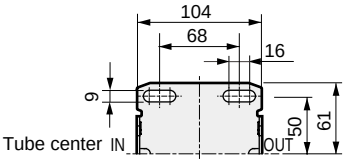

● For the plastic bowl, the dimensions of the manual cock and the auto-drain are the same.

Note: The C type bracket and pipe adaptor set attachments cannot be used together.

Optional dimensions

● Metal bowl F2000-W/F3000-W/F4000-W/F6000-W/F8000-W (option)

Manual metal cock (FM, F1M)

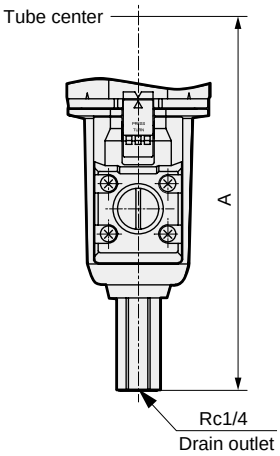

Manual cock (M)

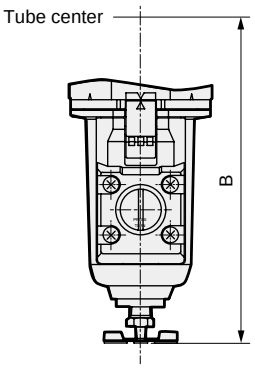

Manual resin cock (M1)

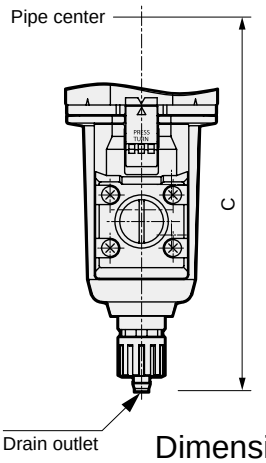

● Material of the metal bowl is aluminum die-casting.

Dimensions table

Model No.	F1M	M	M1
	A	B	C
F2000-W	-	-	147
F3000-W	164	143.5	154
F4000-W	187	166.5	177
F6000-W	226	205	216
F8000-W	266	245.5	256

Optional parts diagram

Element

Element model No. / Model	5 µm Element	0.3 µm Element (Y)
F1000-W	F1000-ELEMENT-ASSY	-
W1000-W,W1100-W	W1000-ELEMENT-ASSY	-
F2000-W	F2000-ELEMENT	-
W2000-W,W2100-W	W2000-ELEMENT	-
F3000-W,FM3000-W	F3000-ELEMENT	F3000-ELEMENT-Y
W3000-W,W3100-W	W3000-ELEMENT	W3000-ELEMENT-Y
F4000-W,FM4000-W	F4000-ELEMENT	F4000-ELEMENT-Y
W4000-W,W4100-W	W4000-ELEMENT	W4000-ELEMENT-Y
F6000-W,FM6000-W	F6000-ELEMENT	F6000-ELEMENT-Y
F8000-W,FM8000-W	F8000-ELEMENT	F8000-ELEMENT-Y
W8000-W,W8100-W	W8000-ELEMENT	W8000-ELEMENT-Y

Note: For the F1000-W and W1000-W, the baffle and element are assembly parts.

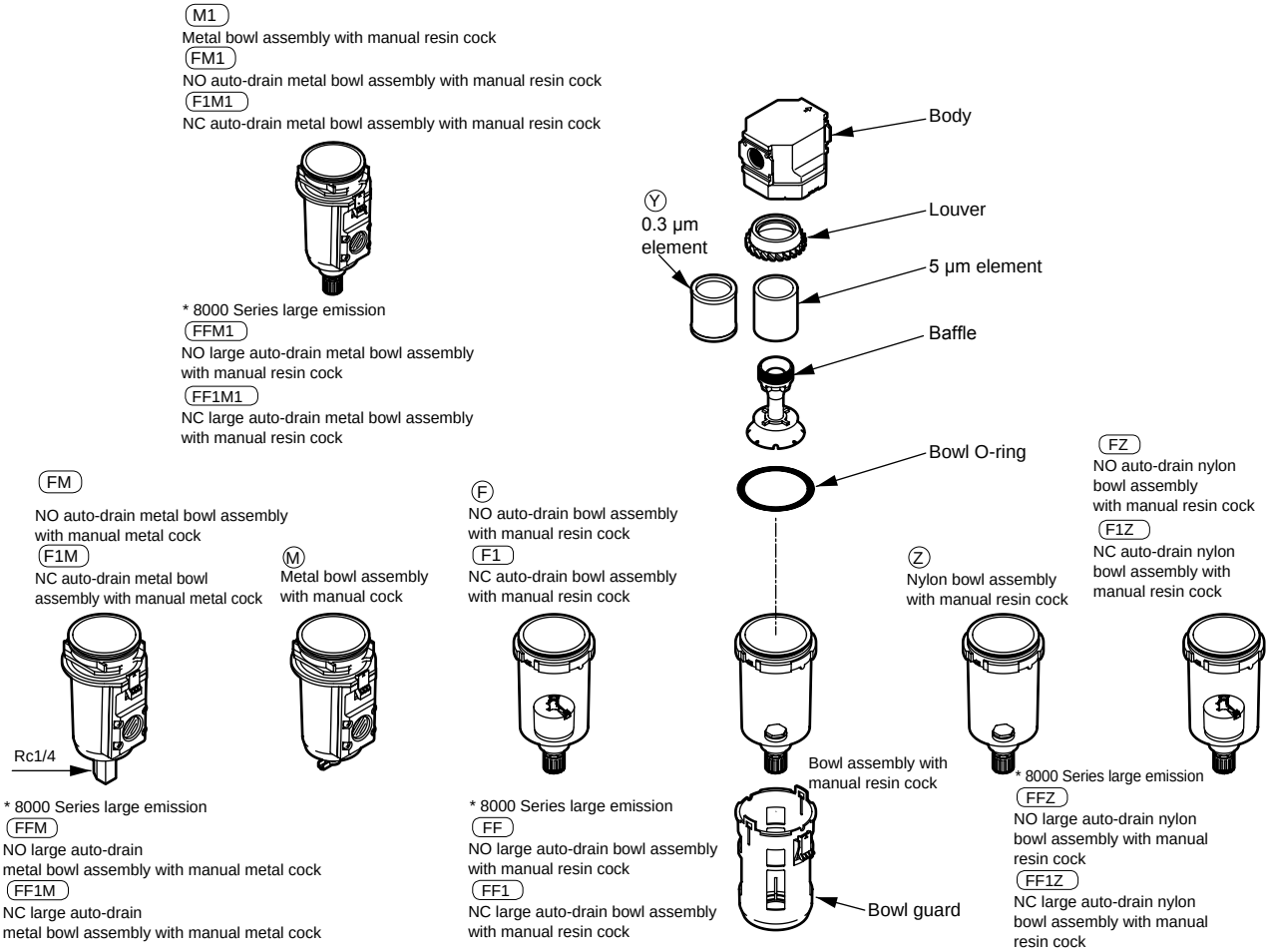

Repair parts kit

(set of louver, baffle, element and bowl O-ring)

Repair parts kits model No. / Model	5 µm element	0.3 µm element (Y)
F1000-W *1	F1000-KIT	-
F2000-W	F2000-KIT	-
F3000-W,FM3000-W	F3000-KIT	F3000-KIT-Y
F4000-W,FM4000-W	F4000-KIT	F4000-KIT-Y
F6000-W,FM6000-W	F6000-KIT	F6000-KIT-Y
F8000-W, FM8000-W *2	F8000-KIT	F8000-KIT-Y

*1: In the case of the F1000-W, an assembly of baffle and element and a bowl O-ring are a package set.

*2: In the case of the F8000-W, the baffle, element and bowl O-ring are a package set.

Bowl guard

Bowl guard model No. / Model	For polycarbonate bowl	For nylon bowl
F1000-W,W1000-W,W1100-W	F1000-W-BOWL-GUARD	F1000-W-BOWL-GUARD-Z
L1000-W	L1000-W-BOWL-GUARD	L1000-W-BOWL-GUARD-Z
M1000-W	M1000-W-BOWL-GUARD	M1000-W-BOWL-GUARD-Z
F2000-W,W2000-W,W2100-W	F2000-W-BOWL-GUARD	F2000-W-BOWL-GUARD-Z
W3100-W,F3000-W,W3000-W,M3000-W	F3000-W-BOWL-GUARD	F3000-W-BOWL-GUARD-Z
L3000-W	L3000-W-BOWL-GUARD	L3000-W-BOWL-GUARD-Z
F4000-W,W4000-W,M4000-W, W4100-W,F6000-W M6000-W, W8100-W,F8000-W,W8000-W,M8000-W	F4000-W-BOWL-GUARD	F4000-W-BOWL-GUARD-Z
L4000-W,L8000-W	L4000-W-BOWL-GUARD	L4000-W-BOWL-GUARD-Z
W8100-W,F8000-W,W8000-W-FF,FF1	DT4000-W-BOWL-GUARD	DT4000-W-BOWL-GUARD-Z

Note: The bowl guard for 1000 Series F1 is sold as a set with the bowl assembly. The model No. is “F1000-W-BOWL-BOWL-GUARD-F1”.

Bowl assembly (set of bowl assembly and bowl O-ring)

Bowl assembly model No. / Model	PC bowl assembly with manual resin cock	PA bowl assembly with manual resin cock	Metal bowl assembly with manual cock	Metal bowl assembly with manual resin cock	NO auto-drain PC bowl assembly with manual resin cock *1	NC auto-drain PC bowl assembly with manual resin cock
F1000-W,W1000-W M1000-W,W1100-W	F1000-W-BOWL	F1000-W-BOWL-Z	-	-	-	F1000-W-BOWL-BOWL GUARD-F1 *3
F2000-W,W2000-W M2000-W,W2100-W	F2000-W-BOWL	F2000-W-BOWL-Z	-	F2000-W-BOWL-M1	-	M2000-W-BOWL-F1
F3000-W,M3000-W W3000-W,W3100-W	F3000-W-BOWL	F3000-W-BOWL-Z	F3000-W-BOWL-M	F3000-W-BOWL-M1	F3000-W-BOWL-F	M3000-W-BOWL-F1
FM3000-W,MM3000-W	-	-		-	-	-
F4000-W,F6000-W M4000-W,M6000-W F8000-W,M8000-W W4000-W,W4100-W W8000-W,W8100-W	F4000-W-BOWL	F4000-W-BOWL-Z	F4000-W-BOWL-M	F4000-W-BOWL-M1	F4000-W-BOWL-F	M4000-W-BOWL-F1
FM4000-W,FM6000-W FM8000-W,MM4000-W MM6000-W,MM8000-W	-	-		-	-	-

Bowl assembly model No. / Model	NO auto-drain PA bowl assembly with manual resin cock *1	NC auto-drain PA bowl assembly with manual resin cock	NO auto-drain metal bowl assembly with manual metal cock *1	NO auto-drain metal bowl assembly with manual resin cock	NC auto-drain metal bowl assembly with manual metal cock	NC auto-drain metal bowl assembly with manual resin cock	NO auto-drain bowl assembly for medium pressure *1	NC auto-drain bowl assembly for medium pressure
F1000-W,W1000-W M1000-W,W1100-W	-	F1000-W-BOWL-BOWL GUARD-F1Z *3	-	-	-	-	-	-
F2000-W,W2000-W M2000-W,W2100-W	-	M2000-W-BOWL-F1Z	-	-	-	M2000-W-BOWL-F1M1	-	-
F3000-W,M3000-W W3000-W,W3100-W	F3000-W-BOWL-FZ	M3000-W-BOWL-F1Z	F3000-W-BOWL-FM	F3000-W-BOWL-FM1	M3000-W-BOWL-F1M	M3000-W-BOWL-F1M1	-	-
FM3000-W,MM3000-W	-	-	-	-	-	-	FM3000-W-BOWL-F	MM3000-W-BOWL-F1
F4000-W,F6000-W M4000-W,M6000-W F8000-W,M8000-W W4000-W,W4100-W W8000-W,W8100-W	F4000-W-BOWL-FZ	M4000-W-BOWL-F1Z	F4000-W-BOWL-FM	F4000-W-BOWL-FM1	M4000-W-BOWL-F1M	M4000-W-BOWL-F1M1	-	-
FM4000-W,FM6000-W FM8000-W,MM4000-W MM6000-W,MM8000-W	-	-	-	-	-	-	FM4000-W-BOWL-F	MM4000-W-BOWL-F1

Bowl assembly model No. / Model	NO large auto-drain PC bowl assembly with manual resin cock	NC large auto-drain PC bowl assembly with manual resin cock	NO large auto-drain PA bowl assembly with manual resin cock	NC large auto-drain PA bowl assembly with manual resin cock	NO large auto-drain metal bowl assembly with manual metal cock	NC large auto-drain metal bowl assembly with manual metal cock	NO large auto-drain metal bowl assembly with manual resin cock	NC large auto-drain metal bowl assembly with manual resin cock
F8000-W,W8000-W W8100-W	F8000-W-BOWL-FF	F8000-W-BOWL-FF1	F8000-W-BOWL-FFZ	F8000-W-BOWL-FF1Z	F8000-W-BOWL-FFM	F8000-W-BOWL-FF1M	F8000-W-BOWL-FFM1	F8000-W-BOWL-FF1M1

*1: NO auto-drain cannot be selected for the oil mist filter M1000-W, M3000-W, M4000-W, M6000-W and M-8000W and oil mist filter for medium pressure MM3000-W, MM4000-W, MM6000-W and MM8000-W.
*2: The large discharge auto-drain cannot be installed on the M8000-W.
*3: The bowl assembly for the 1000 Series F1 is sold as a set with the bowl guard.



Oil mist filter Standard White Series

M1000/M2000/M3000 M4000/M6000/M8000-W Series

Ideal for circuits susceptible to oil, including measuring, and instrumentation circuits.

● Port size: 1/8 to 1

JIS symbol 

RoHS CAD

Specifications

Item	M1000-W	M2000-W	M3000-W	M4000-W	M6000-W	M8000-W
Appearance						
Working fluid	Compressed air					
Working pressure MPa	0.1 (≈15 psi, 1 bar) to 1.0 (≈150 psi, 10 bar) *2, *3					
Proof pressure MPa	1.5 (≈220 psi, 15 bar) *2					
Drain capacity cm^3	3	25	45	80	80	80
Port size Rc,NPT,G	1/8,1/4 (3/8 uses an adaptor)	1/4,3/8 (1/2 uses an adaptor)		1/4,3/8,1/2 (3/4 uses an adaptor)	3/4,1 (11/4 uses an adaptor)	3/4,1 (1 1/4 uses an adaptor)
Weight kg	0.096	0.25	0.28	0.52	0.95	1.35
Standard accessories	Bowl guard					

Mantle option name		Blank (M type)	S (S type)	X (X type)
Max. processing flow rate *1 ℓ/min(ANR) Primary pressure 0.7 MPa	M1000-□-W	150 *2	150 *2	150
	M2000-□-W	250	310	310
	M3000-□-W	360	450	450
	M4000-□-W	825	1000	1000
	M6000-□-W	1270	1400	1400
	M8000-□-W	2600	2900	2900
Ambient / fluid temperatures °C		5 to 60		5 to 30
Filtration rating μm		0.01 (nominal)	0.3	Suction by activated charcoal
Secondary side oil concentration mg/m^3		≤0.01 (≤0.1 after oil saturation) *4, 5	0.5 or less *4	0.003 or less *6
Mantle (element) change		1 year (6000 hours) or pressure drop 0.1 MPa		- *7

*1: Use within the max. processing flow rate.
If the max. processing flow rate is exceeded temporarily, or if the filter is installed at a location with high levels of pulsation, the mantle could be damaged or oil or drainage, etc., could splatter to the secondary side and result in a terminal malfunction.

*2: When using M1000-W-F1 auto-drain, the min. working pressure is 0.2 MPa, the max. working pressure is 0.7 MPa and the proof pressure is 1.05 MPa. For the max. processing flow rate, refer to the max. processing flow rate graph (page 119).

*3: In the case of "F1" with auto-drain, the min. working pressure is 0.15 MPa.

*4: The secondary oil concentration is the value when the primary oil concentration is 30 mg/m^3 and inlet air temperature is 21°C.

*5: Install an oil mist filter (S type) as a pre-filter on the primary side to prevent early clogging.

*6: When an oil mist filter (M Series M type) is installed on the primary side.

*7: The mantle (element) replacement period differs depending on the odor density in compressed air, and thus cannot be clearly indicated.
Consider the total period from initial installation to when the smell of oil is confirmed as the effective deodorizing period, and replace at the same time as the M type or control with usage time. (When the inlet temperature is 21°C, replace at the control time or 1,000 hours, whichever is sooner)
Keep the primary air temperature at 30°C or less. The deodorizing effect will drop if temperature is high, so provide heat dissipation measures.

Differential pressure switch/Switch specifications

Differential pressure switch option name	Differential pressure switch option Q3/Q4 Reed 2-wire	
Load voltage	12/24 VDC	110 VAC
Load current *1	5 to 50 mA	7 to 20 mA
Internal voltage drop	3 V or less	
Display lamp	Red LED (Lit when ON)	
Lead wire length	3 m (oil resistant vinyl cabtyre cable 2-conductor 0.2 mm^2)	
Impact resistance	294 m/s^2	
Insulation resistance	20 MΩ and over with 500 VDC megger	
Withstand voltage	No failure after 1 minute of 1,000 VAC application	
Degree of protection	IEC Standard IP67, JIS C0920 (water-tight), oil resistance	
Contact protection circuit	None	

*1: Install a load resistor before use.

CE marking specifications

Compatible as standard.

Switch internal circuit diagram

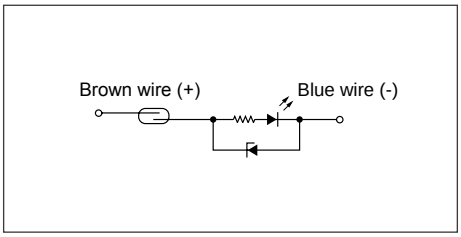

Option weight

* Add to the weight of the standard accessories.

Unit: kg

Code	Drain discharge	Bowl material		Differential pressure indicator		Differential pressure switch		Pipe adaptor set							Bracket
	F1	M	M1	Q1	Q2	Q3	Q4	A6*W	A8*W	A10*W	A15*W	A20*W	A25*W	A32*W	BW
M1000	0.007							0.09	0.09	0.09					0.1
M2000	0.02		0.1		0.04	0.09	0.13		0.16	0.16	0.16				0.15
M3000	0.02	0.1	0.1		0.04	0.09	0.13		0.16	0.16	0.16				0.17
M4000	0.02	0.1	0.1	0.024	0.05	0.10	0.14		0.16	0.16	0.16	0.16			0.21
M6000	0.02	0.1	0.1		0.05	0.10	0.14					0.53	0.53	0.53	0.34
M8000	0.02	0.1	0.1									0.53	0.53	0.53	0.36

Clean-room specifications

(Catalog No. CB-033SA)

● Anti-dust generation structure for use in cleanrooms

M*000 - ..... **- P7***

Specifications for rechargeable battery

(Catalog No. CC-1226A)

● Design compatible with rechargeable battery manufacturing process

M*000 - ..... **- P4***

How to order

M1000 - 6 ○ - W - S - ○ - A6W - ○

Ⓐ Model No.
Ⓑ Port size
Ⓒ Port thread
Ⓓ Option
Ⓔ Display unit
Ⓕ Pipe adaptor set (included)
Ⓖ Bracket (included)

*** Refer to page 30 for the explanation of the options.**

Code		Description	Ⓐ Model No. M1000	M2000	M3000	M4000	M6000	M8000
Ⓑ Port size								
6		1/8	●					
8	***1**	1/4	●	●	●	●		
10		3/8		●	●	●		
15		1/2				●		
20		3/4					●	●
25		1					●	●
Ⓒ Port thread								***2**
Blank		Rc thread	●	●	●	●	●	●
N		NPT thread	●	●	●	●	●	●
G		G thread	●	●	●	●	●	●
Ⓓ Option								***3**
Drain Discharge ***4*5**	**Blank**	With manual drain cock	●	●	●	●	●	●
	F1	Auto-drain with man/override (NC: No press → no exhaust)	●	●	●	●	●	●
Bowl Material	**Blank**	Polycarbonate bowl	●	●	●	●	●	●
	Z	Nylon bowl	●	●	●	●	●	●
	M	Metal bowl ***6**			●	●	●	●
	M1	Metal bowl with manual drain cock		●	●	●	●	●
Mantle (Element)	**Blank**	M type (nominal 0.01 μm; remaining oil 0.01 mg/m^3)	●	●	●	●	●	●
	S	S type (0.3 μm; remaining oil 0.5 mg/m^3)	●	●	●	●	●	●
	X *6	X type (deodorization; remaining oil 0.003 mg/m^3)	●	●	●	●	●	●
Diff press Detect	**Blank**	Without differential pressure detection port	●	●	●	●	●	●
	Q	With differential pressure detection port (Rc1/4)					●	●
Differential pressure indicator	**Blank**	No differential pressure indicator	●	●	●	●	●	●
	Q1 *7	With differential pressure indicator *8				●		
	Q2	With differential pressure indicator		●	●	●	●	
Diff press SW	**Q3**	Differential pressure indicator + switch 1-point (SW2)		●	●	●	●	
	Q4	Differential pressure indicator + switch 2-point (SW1/SW2)		●	●	●	●	
Flow Direction	**Blank**	Standard flow (left → right)	●	●	●	●	●	●
	X1	Reverse flow (right → left)	●	●	●	●	●	●
Ⓔ Display unit								
Blank		MPa display (Rc thread), psi display (NPT thread), bar display (G thread)	●	●	●	●	●	●
J1		MPa display (NPT, G threads)	●	●	●	●	●	●
Ⓕ Pipe adaptor set (included)								***8 *9 page 350**
Blank		Not included	●	●	●	●	●	●
A6*W		1/8 pipe adaptor set	●					
A8*W		1/4 pipe adaptor set	●	●	●	●		
A10*W		3/8 pipe adaptor set	●	●	●	●		
A15*W		1/2 pipe adaptor set		●	●	●		
A20*W		3/4 pipe adaptor set				●	●	●
A25*W		1 pipe adaptor set					●	●
A32*W		1 1/4 pipe adaptor set					●	●
*** Adaptor thread**								
Blank		Rc thread	●	●	●	●	●	●
N		NPT thread	●	●	●	●	●	●
G		G thread	●	●	●	●	●	●
Ⓖ Bracket (included)								**Page 346**
Blank		Not included	●	●	●	●	●	●
BW		C-bracket	●	●	●	●	●	●

Precautions for model No. selection

*1: "Q1" with differential pressure indicator and "Q3" "Q4" differential pressure switch cannot be selected for port size "8".
*2: G threads and NPT threads are available for IN, OUT and drain outlet (metal bowl with auto-drain).
*3: Select options for drainage, bowl material and differential pressure detection. When selecting options for several items, list options in order from the top.
*4: NO auto-drain cannot be selected.
***5:Refer to page 354 for the auto-drain usage conditions.**
*6: "X" mantle cannot be combined with F1 option or "Q1" (with differential pressure indicator).
*7: "Q1" with differential pressure indicator cannot be selected for bowl material "M".
*8: The pipe adaptor set and C type bracket cannot be used together.
*9: The joiner set is included with the pipe adaptor set.

Ⓓ Options: Differential pressure indicator/differential pressure switch

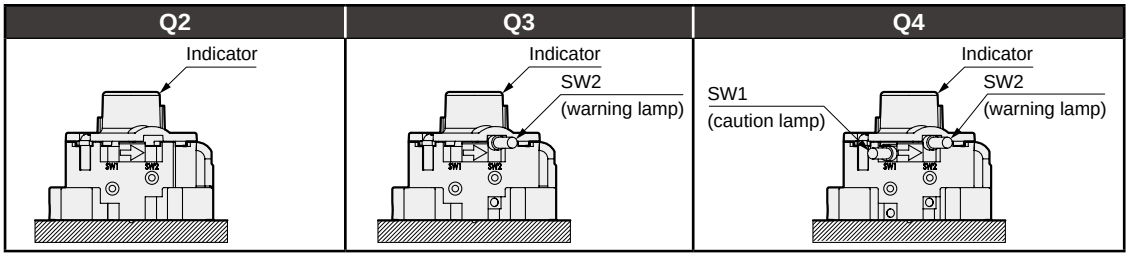

Flow characteristics (max. processing flow rate)

● M*000-W-M

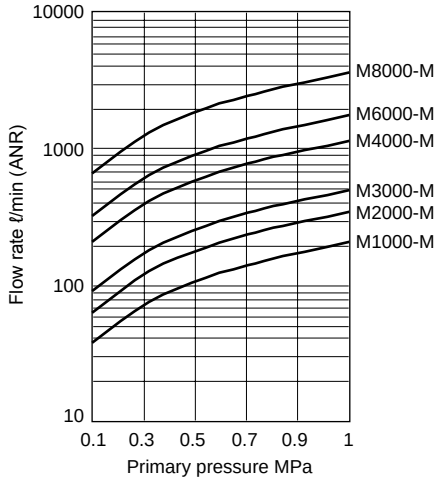

● M*000-W-S

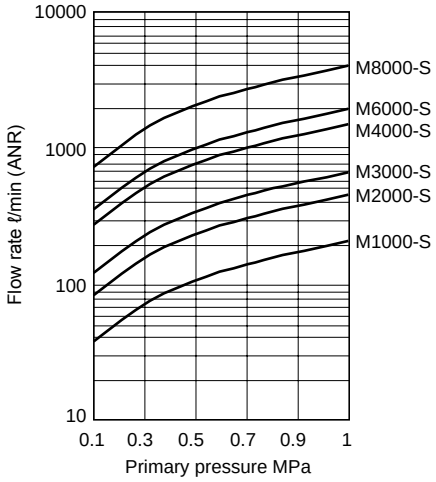

● M*000-W-X

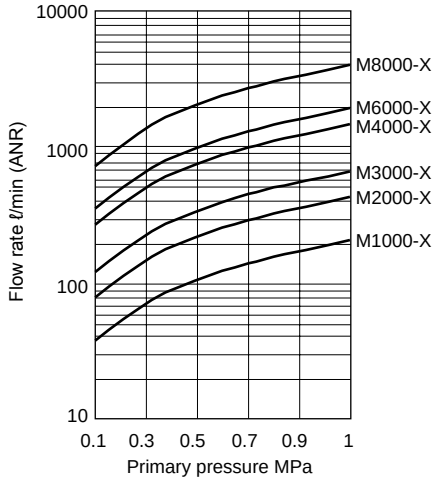

● M1000-W-F1
With auto-drain (M type, S type)

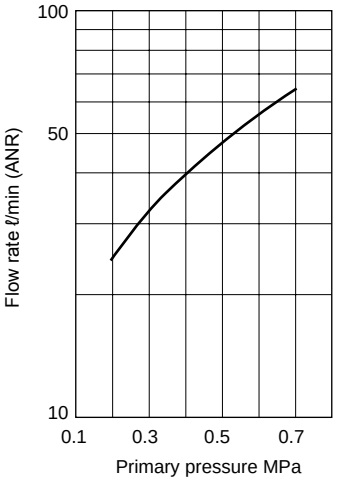

How to select oil mist filter and optional mantle

Recommended circuit

◆ S type



Applications
General industrial air
· Air tool
Air drill/air screw driver
Pneumatic grinder
· Labor-saving device
· Pneumatic jigs and tools
· Air chuck
· Air vice
· Precision part cleaning air blow

◆ M type

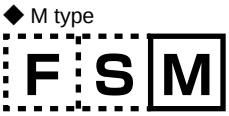

Oil-free air
· Instrumentation
· Measurement
· For sequence control
Movable element/pure fluid element
· Luxury painting
· Precision industry

◆ X type



Odorless air
· Food industry
· Pharmaceutical industry
· Mixing
· Transportation
· Drying
· Packaging
· Brewing air

Option code of mantle and shape

Option code	Appearance
Blank (M type)	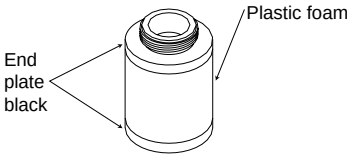
S (S type)	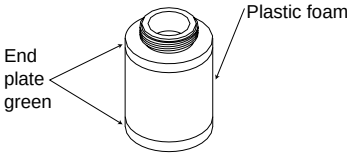
X (X type)	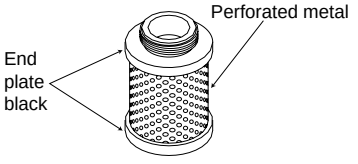

Note: Changes for product upgrades may be made without prior notice.
When placing an order, confirm the option code of the part model No. displayed on the body.

Internal structure and parts list

● M1000-W

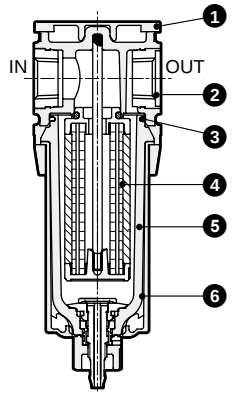

● M2000-W

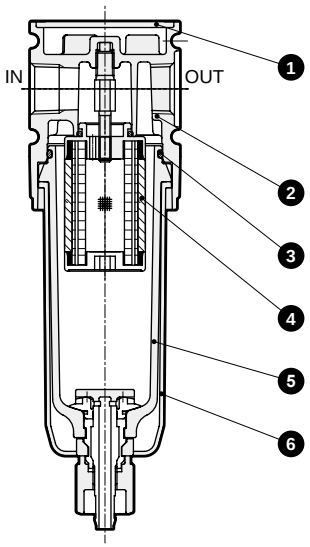

● M3000-W/M4000-W

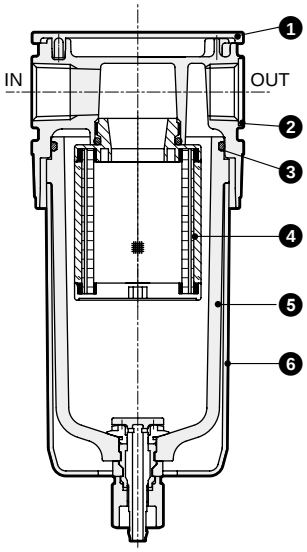

● M6000-W

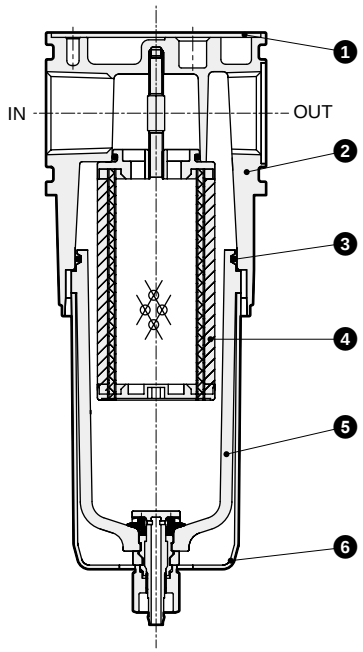

● M8000-W

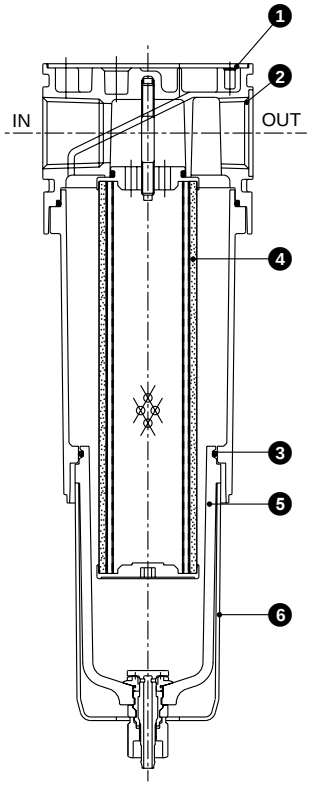

No.	Part name	Material					
		M1000-W	M2000-W	M3000-W	M4000-W	M6000-W	M8000-W
1	Plate cover	ABS resin					
2	Body	Polyamide resin	Aluminum alloy die-casting				
3	O-ring *1	Special nitrile rubber					
4	Mantle assembly	-					
5	Bowl assembly	Polycarbonate resin, polyacetal resin, urethane resin					
6	Bowl guard	Polyamide resin	Polyamide resin, steel				

*1: The O-ring of the M1000-W has a special shape.

Dimensions CAD

● M1000-W

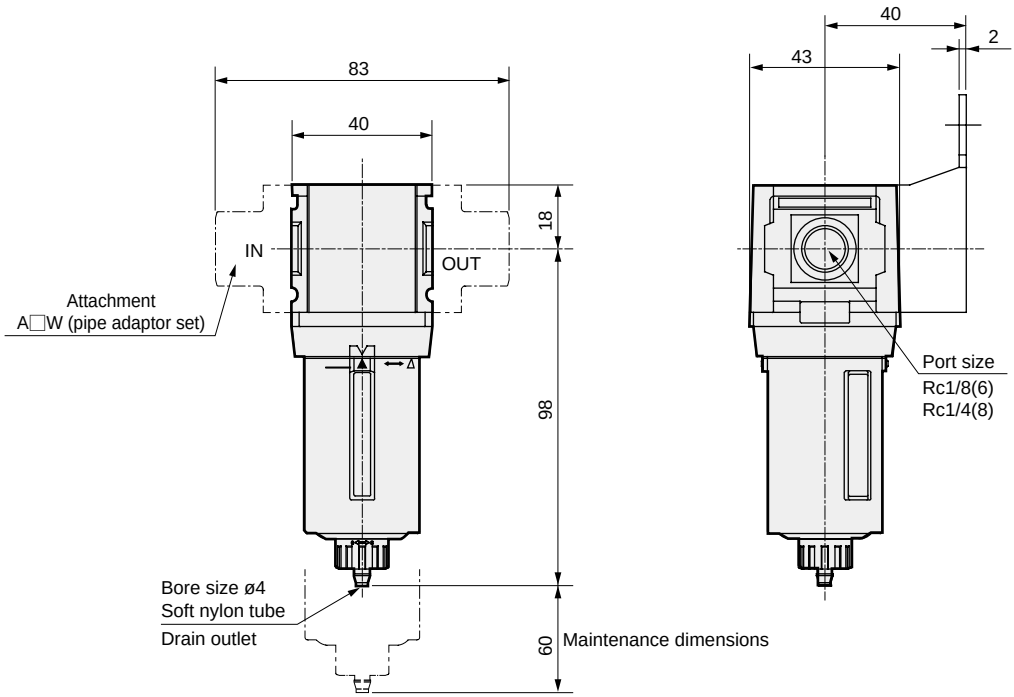

· Attachment
C type bracket (-BW)
Part model No.: B120
· Material: Steel
Zinc plated

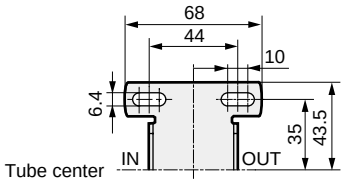

· Dimensions of options
With auto-drain (F1)

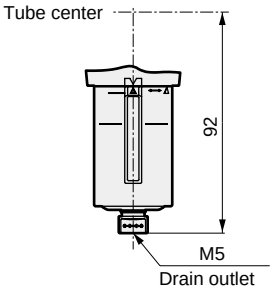

● M2000-W

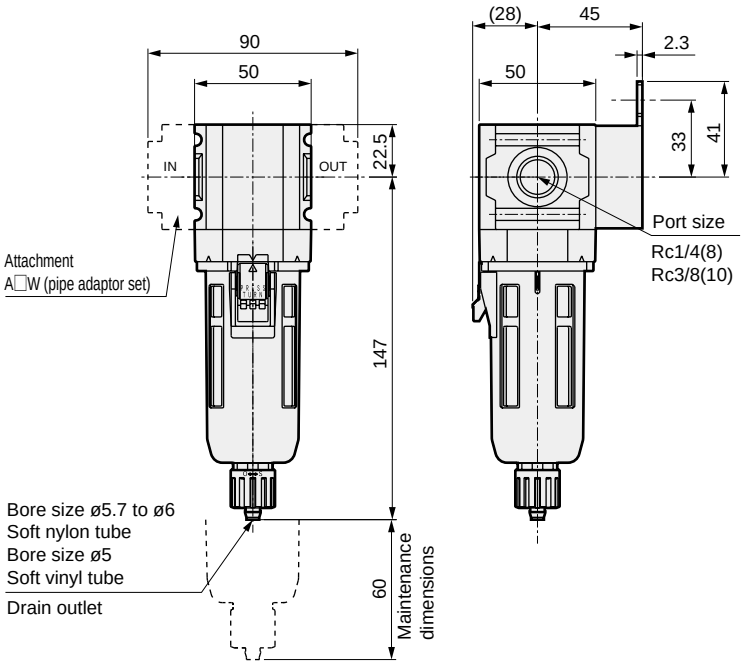

· Attachment
C type bracket (-BW)
Part model No.: B220
· Material: Steel
Zinc plated

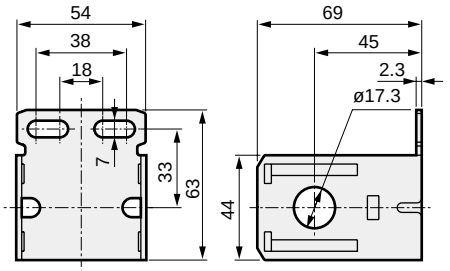

Dimensions CAD

● M3000-W

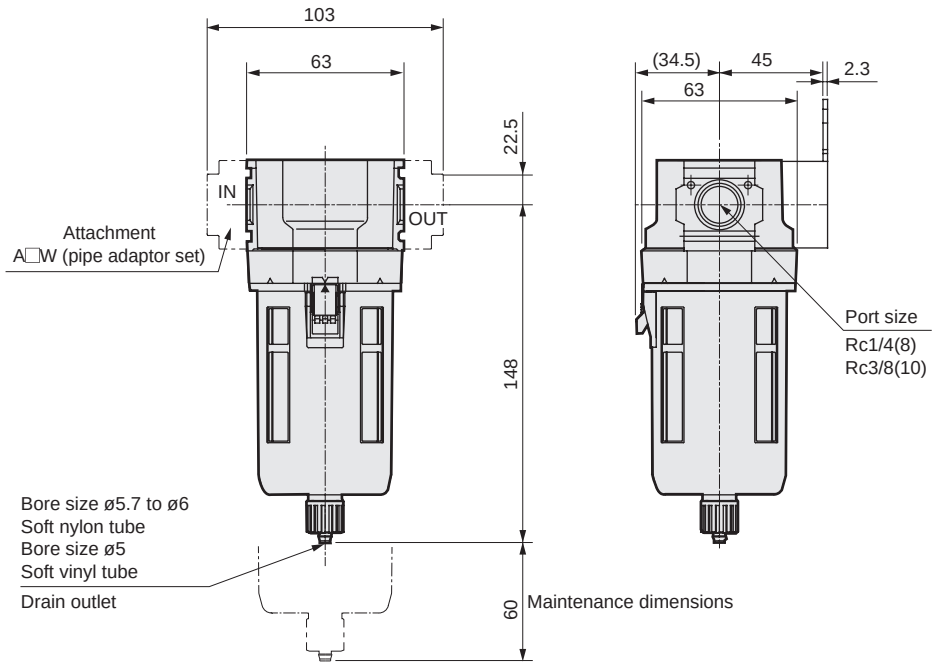

· Attachment
C type bracket (-BW)
Part model No.: B320
· Material: Steel
Zinc plated

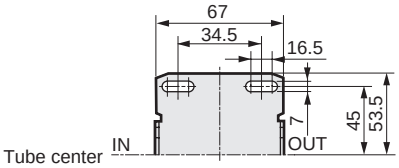

● For the plastic bowl, the dimensions of the manual cock and the auto-drain are the same.
Note: The C type bracket and pipe adaptor set attachments cannot be used together.

● M4000-W

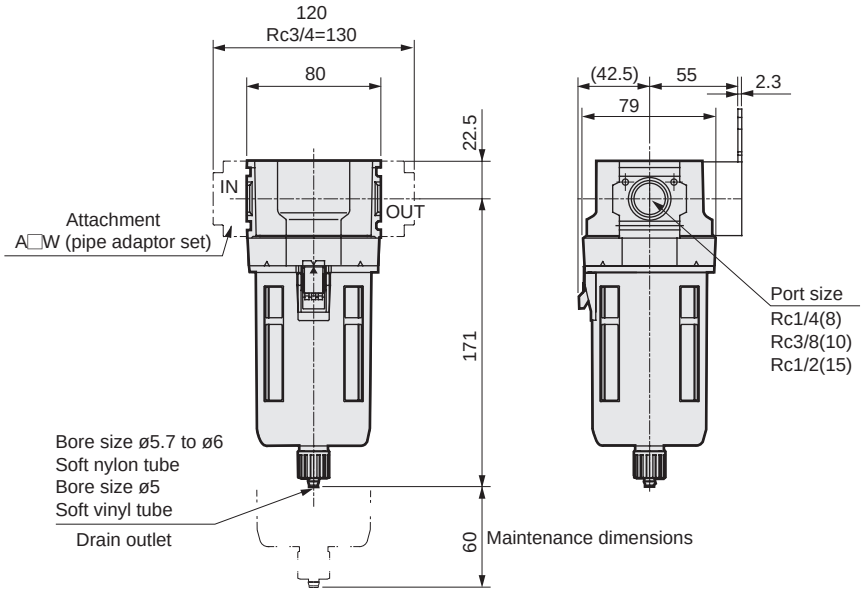

· Attachment
C type bracket (-BW)
Part model No.: B420
· Material: Steel
Zinc plated

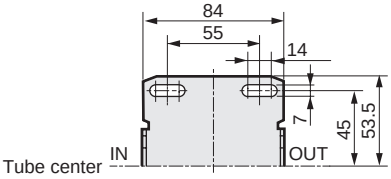

· Dimensions of options
With differential pressure indicator (Q1)

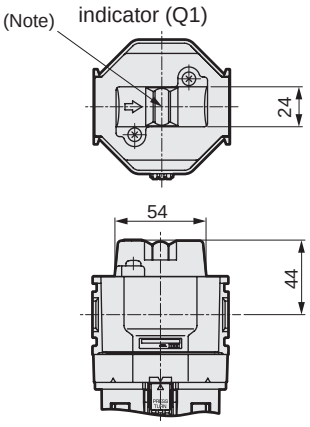

(Note): Normally green, and red when replacing the element

● For the plastic bowl, the dimensions of the manual cock and the auto-drain are the same.

Dimensions

● M6000-W

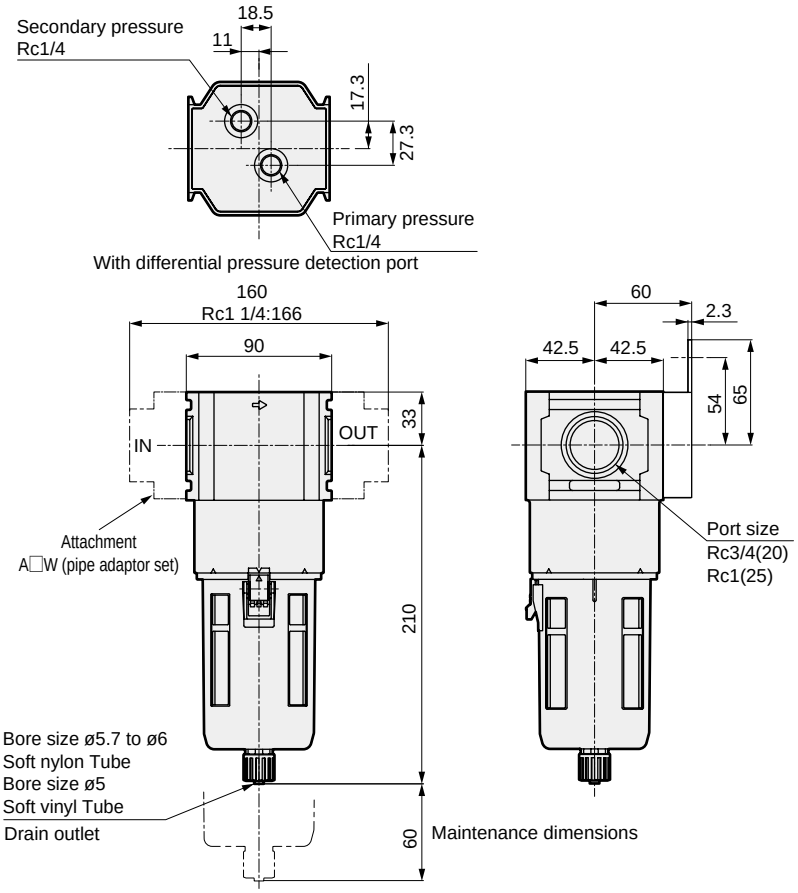

· Attachment
C type bracket (-BW)
Part model No.: B620
· Material: Steel
Zinc plated

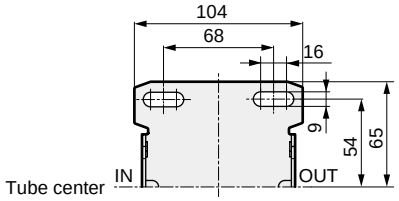

● For the plastic bowl, the dimensions of the manual cock and the auto-drain are the same.
Note: The C type bracket and pipe adaptor set attachments cannot be used together.

● M8000-W

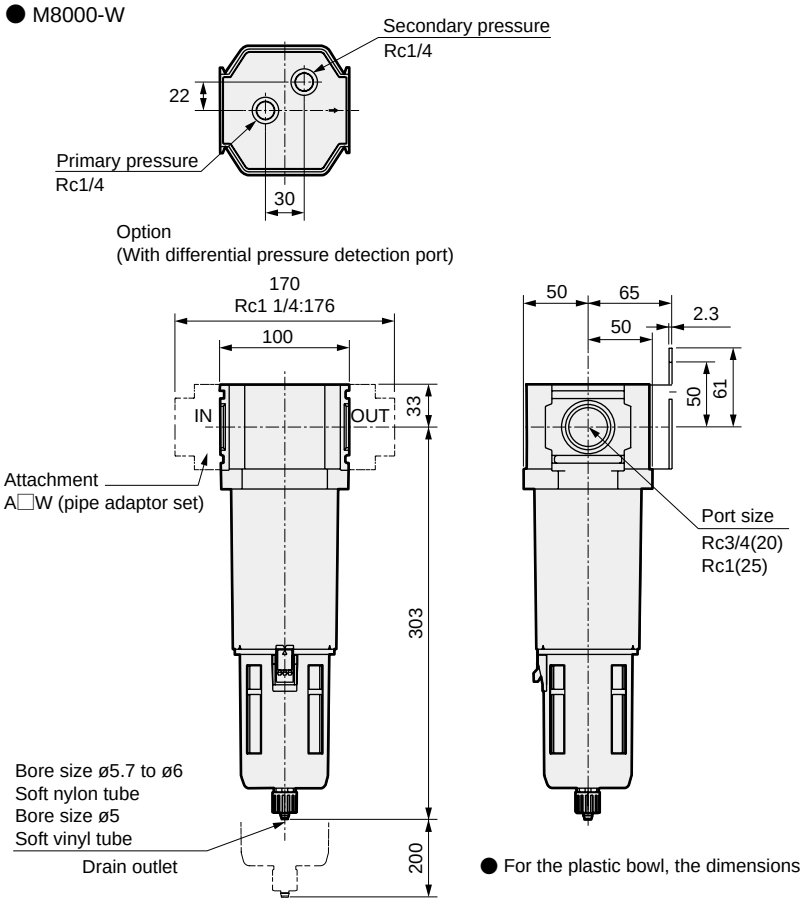

· Attachment
C type bracket (-BW) Part model No.: B820
· Material: Steel
Zinc plated

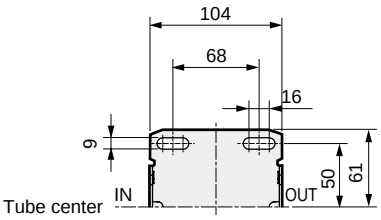

● For the plastic bowl, the dimensions of the manual cock and the auto-drain are the same.

Optional dimensions

CAD

● Metal bowl (option)
[M2000-W, M3000-W, M4000-W, M6000-W, M8000-W]

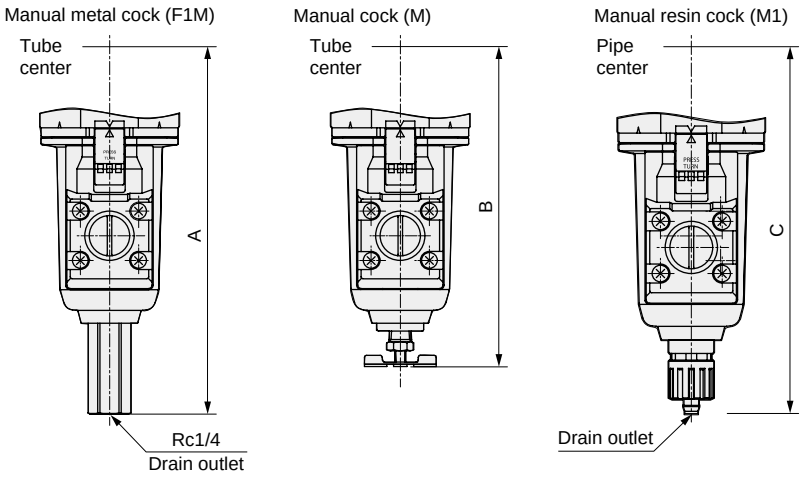

Dimensions table

Model No.	F1M	M	M1
	A	B	C
M2000-W	-	-	147
M3000-W	164	143.5	154
M4000-W	187	166.5	177
M6000-W	226	205	216
M8000-W	319	298	309

● Material of the metal bowl is aluminum die-casting.

● With differential pressure indicator, differential pressure switch (options)
(M2000-W, M3000-W, M4000-W, M6000-W)

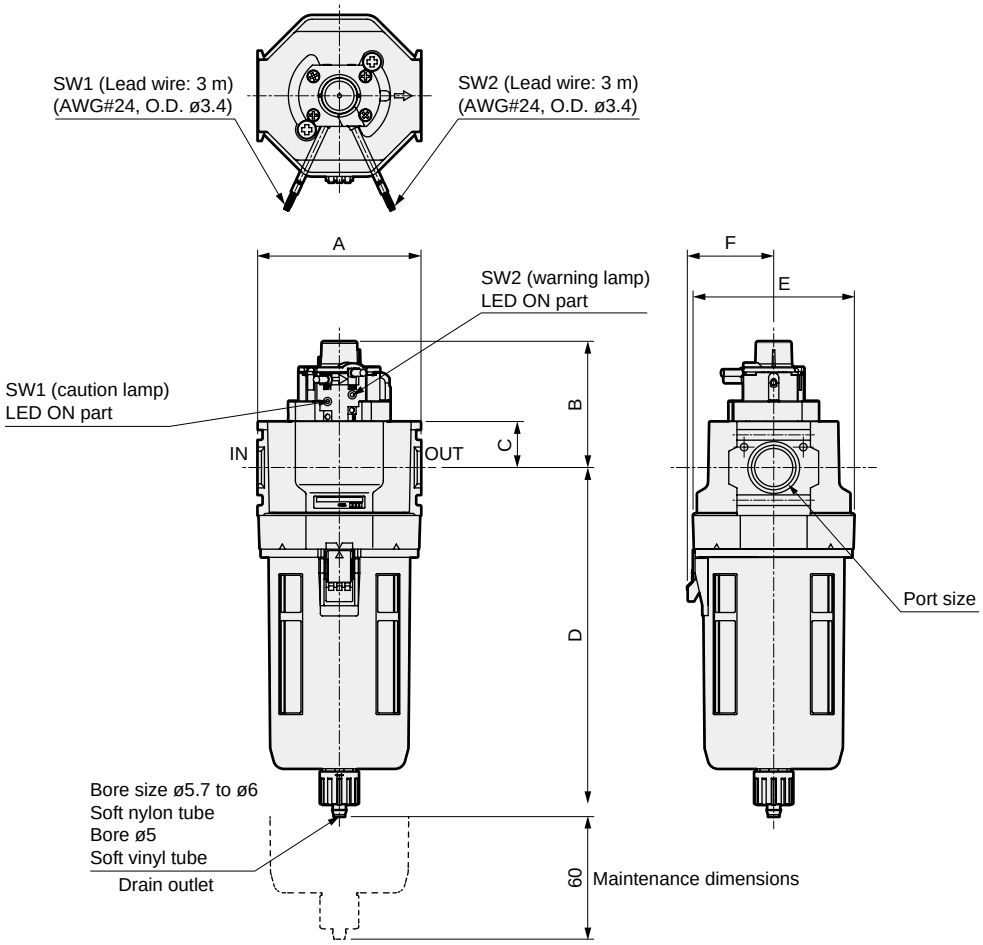

● The dimensions of the manual cock and the auto-drain are the same.

Note: The C type bracket and piping adapter set attachments cannot be used together.

Code	Port size	A	B	C	D	E	F
M2000-W	Rc1/4(8), Rc3/8(10)	50	62	22.5	147	50	(28)
M3000-W	Rc1/4(8), Rc3/8(10)	63	62	22.5	148	63	(34.5)
M4000-W	Rc3/8(10), Rc1/2(15)	80	62	22.5	171	79	(42.5)
M6000-W	Rc3/4(20), Rc1(25)	90	72.5	33	210	85	42.5

Optional parts list - for oil mist filters

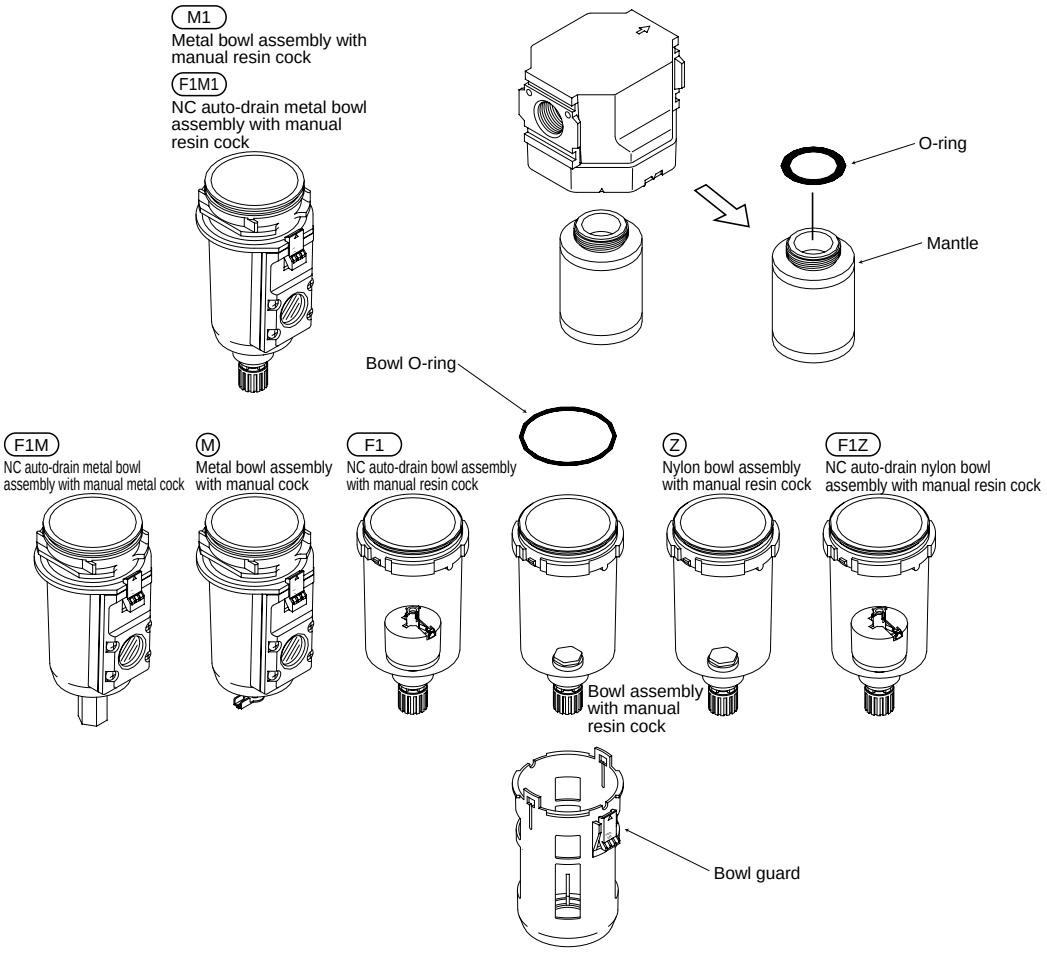

Repair parts kit model No. (set including O-ring, mantle and bowl O-ring)

Model	M type	S type	X type
M1000-W	M1000-KIT	M1000-KIT-S	M1000-KIT-X
M1000-W-F1	M1000-KIT-F1	M1000-KIT-F1S	-
M2000-W	M2000-KIT	M2000-KIT-S	M2000-KIT-X
M3000-W,MM3000-W	M3000-KIT	M3000-KIT-S	M3000-KIT-X
M4000-W,MM4000-W	M4000-KIT	M4000-KIT-S	M4000-KIT-X
M6000-W,MM6000-W	M6000-KIT	M6000-KIT-S	M6000-KIT-X
M8000-W,MM8000-W	M8000-KIT	M8000-KIT-S	M8000-KIT-X

Repair parts kit model No. (set including O-ring and mantle)

Model	M type	S type	X type
M1000-W	M1000-MANTLE-ASSY	M1000-MANTLE-ASSY-S	M1000-MANTLE-ASSY-X
M1000-W-F1	M1000-MANTLE-ASSY-F1	M1000-MANTLE-ASSY-F1S	-
M2000-W	M2000-MANTLE-ASSY	M2000-MANTLE-ASSY-S	M2000-MANTLE-ASSY-X
M3000-W,MM3000-W	M3000-MANTLE-ASSY	M3000-MANTLE-ASSY-S	M3000-MANTLE-ASSY-X
M4000-W,MM4000-W	M4000-MANTLE-ASSY	M4000-MANTLE-ASSY-S	M4000-MANTLE-ASSY-X
M6000-W,MM6000-W	M6000-MANTLE-ASSY	M6000-MANTLE-ASSY-S	M6000-MANTLE-ASSY-X
M8000-W,MM8000-W	M8000-MANTLE-ASSY	M8000-MANTLE-ASSY-S	M8000-MANTLE-ASSY-X

* M parts should be selected as they are compatible with M1000-W, 3000-W, 4000-W, and 8000-W Series products released before May 1998.
* Refer to the air filter options and parts table for details on the bowl assembly and bowl guard.

High-performance with x10 oil removal.

Highly efficient oil removing mantle removes oil up to a secondary oil concentration 0.001mg/m^3.
MX Series high-performance oil mist filter with x10 (compared to oil mist filter M Series) oil removal.

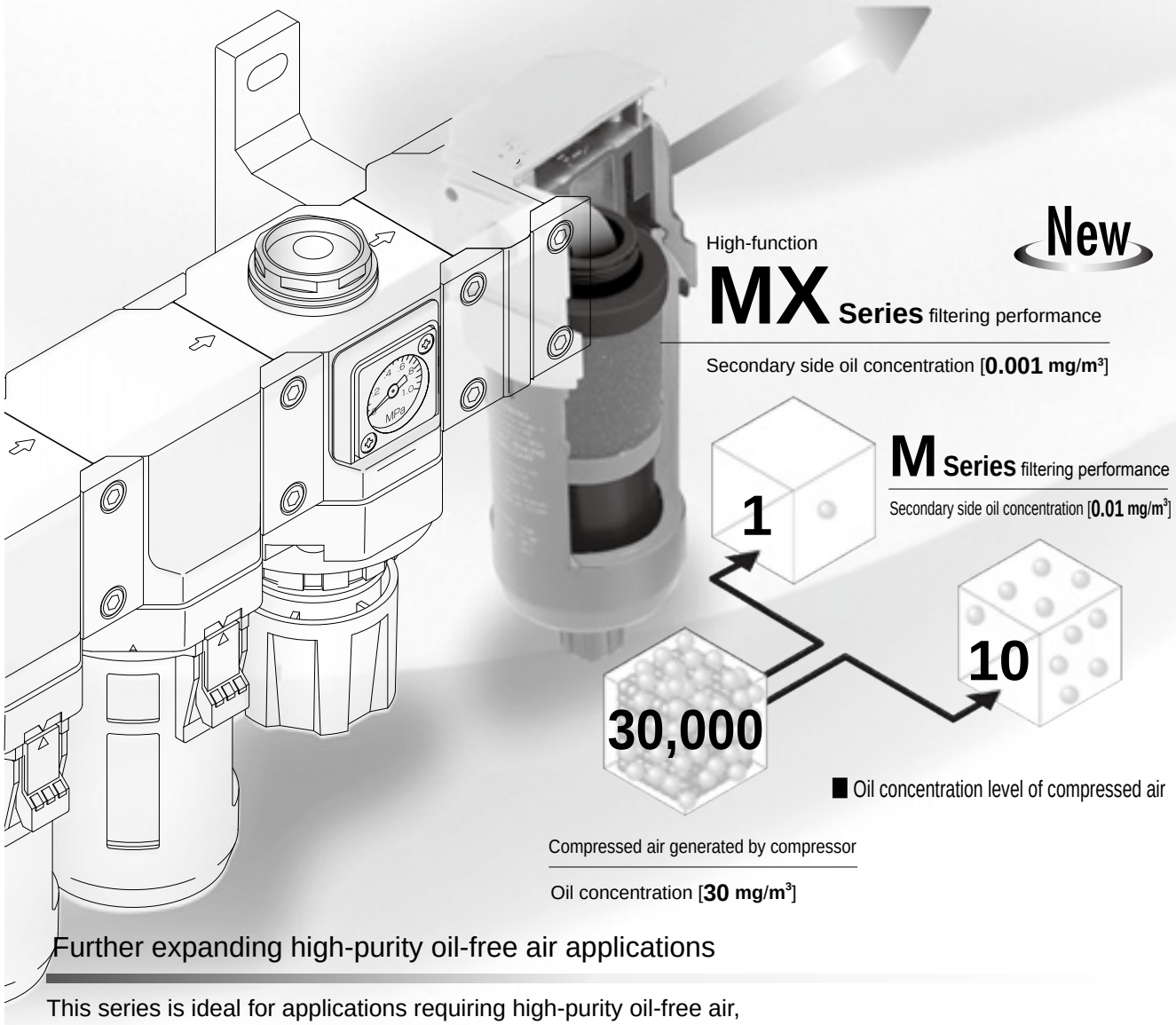

Further expanding high-purity oil-free air applications

This series is ideal for applications requiring high-purity oil-free air, including laser processing systems, optical positioning units, and foodstuff and pharmaceutical manufacturing lines.

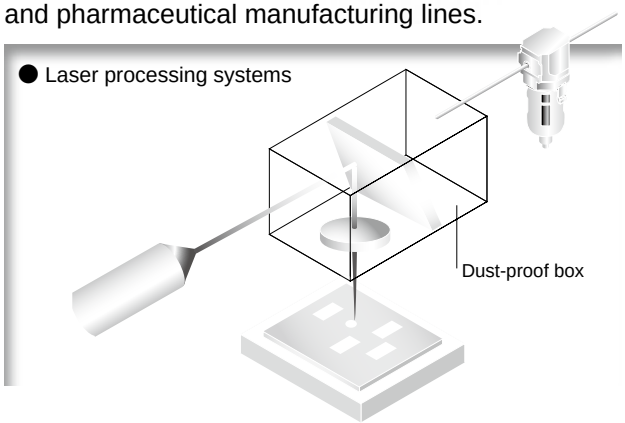

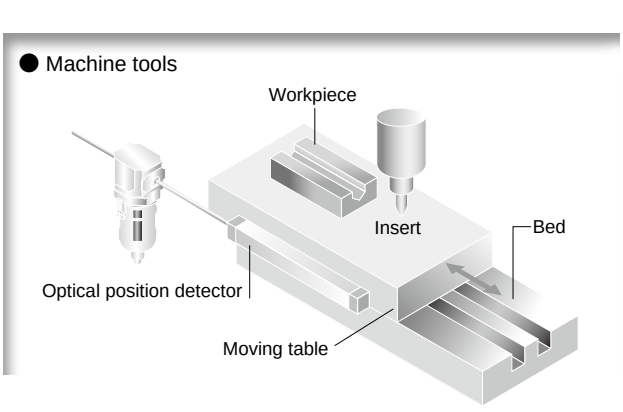

High-performance oil mist filter
MX Series

■ Mantle structural explanation

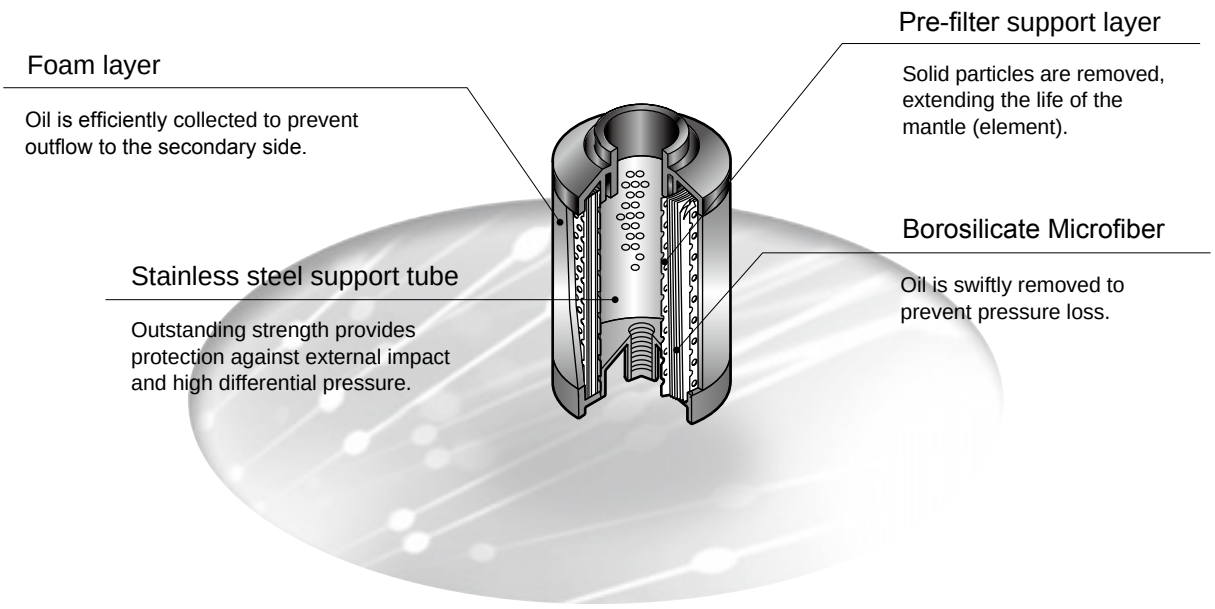

Secondary oil content 0.001 mg/m^3 or less

The highly efficient oil removing mantle removes oil up to the secondary oil concentration of 0.001 mg/m^3 at 21°C.

High-precision filtration

Impurities up to 0.01µm are removed.

Long service life/low pressure loss

The gap rate within the mantle (element) fibers is high at 94%, suppressing pressure loss and extending life.

Enabling module connection

Systems can be configured with module connections in the same way as the conventional filter F Series and oil mist filter M Series.

Extensive models

Five types -- MX1000, 3000, 4000, 6000 and 8000 -- are used to match the flow.

Suitable for clean rooms

The P70 Series is available.
(3000, 4000 and 6000 Series are available)

High-performance oil mist filter
MX Series variation

		Filtration µm	Secondary side oil concentration mg/m^3 (21°C)	Processing flow rate ℓ/min 1000 Series	3000 Series	4000 Series	6000 Series	8000 Series	Operating ambient temperature range °C
MX Series		0.01	0.001 or less	75	180	370	670	1490	5 to 60
M Series	M Type	0.01	0.01 or less	150	360	825	1270	2600	5 to 60
	S Type	0.3	0.5 or less	150	450	1000	1400	2900	5 to 60
	X Type	Adsorption of activated carbon	0.003 or less	150	450	1000	1400	2900	5 to 30

Read Safety Precautions to ensure correct, safe product use.



High performance oil mist filter Standard White Series

MX1000/MX3000/MX4000 MX6000/MX8000-W Series

Secondary oil content 0.001 mg/m^3

Ideal for optical devices, such as optical positioning devices and laser processing systems.

● Port size: 1/8 to 1

JIS symbol 

RoHS CAD

Specifications

Item	MX1000-W	MX3000-W	MX4000-W	MX6000-W	MX8000-W
Appearance					
Working fluid	Compressed air				
Working pressure MPa	0.1 (≈15 psi, 1 bar) to 1.0 (≈150 psi, 10 bar) *2				
Proof pressure MPa	1.5 (≈220 psi, 15 bar)				
Ambient / fluid temperatures °C	5 (41°F) to 60 (140°F)				
Filtration rating μm	0.01 (nominal)				
Secondary side oil concentration mg/m^3	0.001 or less *3				
Max. processing flow rate ℓ/min(ANR) *1	75	180	370	670	1480
Drain capacity cm^3	3	45	80	80	80
Port size Rc,NPT,G	1/8,1/4 (3/8 uses an adaptor)	1/4,3/8 (1/2 uses an adaptor)	1/4,3/8,1/2 (3/4 uses an adaptor)	3/4,1 (1 1/4 uses an adaptor)	3/4,1 (1 1/4 uses an adaptor)
Weight kg	0.096	0.28	0.52	0.95	1.35
Mantle (element) change	1 year (6000 hours) or pressure drop 0.1 MPa				
Standard accessories	Bowl guard				

*1: Values when primary pressure is 0.7 MPa and pressure drop is 0.01 MPa. Use the product within the max. processing flow rate.
If the max. processing flow rate is exceeded temporarily, or if the filter is installed at a location with high levels of pulsation, the mantle could be damaged or oil or drainage, etc., could splatter to the secondary side and result in a terminal malfunction.
*2: In the case of "F1" with auto-drain, the min. working pressure is 0.15 MPa.
*3: The secondary oil content is the value when the primary oil content is 30 mg/m^3, the inlet air temperature is 21°C, and before the oil is saturated.
*4: Install an oil mist filter (S type) as a pre-filter on the primary side to prevent early clogging.

Option weight

* Add to the weight of the standard accessories.

Unit: kg

Code	Drain discharge	Bowl material		Pipe adaptor set							Bracket
	F1	M	M1	A6*W	A8*W	A10*W	A15*W	A20*W	A25*W	A32*W	BW
MX1000	0.007			0.09	0.09	0.09					0.1
MX3000	0.02	0.1	0.1		0.16	0.16	0.16				0.17
MX4000	0.02	0.1	0.1		0.16	0.16	0.16	0.16			0.21
MX6000	0.02	0.1	0.1					0.53	0.53	0.53	0.34
MX8000	0.02	0.1	0.1					0.53	0.53	0.53	0.36

How to order

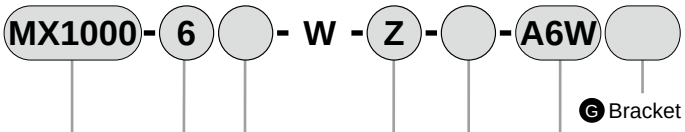

* Refer to page 30 for the explanation of the option.

Code	Description	Ⓐ Model No. MX1000	MX3000	MX4000	MX6000	MX8000
Ⓑ Port size						
6	1/8	●				
8	1/4	●	●	●		
10	3/8		●	●		
15	1/2			●		
20	3/4				●	●
25	1				●	●
Ⓒ Port thread						*1
Blank	Rc thread	●	●	●	●	●
N	NPT thread	●	●	●	●	●
G	G thread	●	●	●	●	●
Ⓓ Option						*2
Drain discharge **Blank**	With manual drain cock	●	●	●	●	●
F1 ***3, 4**	Auto-drain manual override (NC: no exhaust when not pressurized)		●	●	●	●
Bowl material **Blank**	Polycarbonate bowl	●	●	●	●	●
Z	Nylon bowl	●	●	●	●	●
M	Metal bowl		●	●	●	●
M1	Metal bowl with manual drain cock		●	●	●	●
Diff press detect **Blank**	Without differential pressure detection port	●	●	●	●	●
Q	With differential pressure detection port (Rc 1/4)				●	●
Flow direction **Blank**	Standard flow (left → right)	●	●	●	●	●
X1	Reverse flow (right → left)	●	●	●	●	●
Ⓔ Display unit						
Blank	MPa display (Rc thread), psi display (NPT thread), bar display (G thread)	●	●	●	●	●
J1	MPa display (NPT, G thread)	●	●	●	●	●
Ⓕ Pipe adaptor set (included)						*5 Page 350 *6
Blank	Not included	●	●	●	●	●
A6*W	1/8 pipe adaptor set	●				
A8*W	1/4 pipe adaptor set	●	●	●		
A10*W	3/8 pipe adaptor set	●	●	●		
A15*W	1/2 pipe adaptor set		●	●		
A20*W	3/4 pipe adaptor set			●	●	●
A25*W	1 pipe adaptor set				●	●
A32*W	1 1/4 pipe adaptor set				●	●
*** Adaptor thread**						
Blank	Rc thread	●	●	●	●	●
N	NPT thread	●	●	●	●	●
G	G thread	●	●	●	●	●
Ⓖ Bracket (included)						Page 346
Blank	Not included	●	●	●	●	●
BW	C type bracket	●	●	●	●	●

⚠ Precautions for model No. selection

*1: G threads and NPT threads are available for IN, OUT and drain outlet (metal bowl with auto-drain).
*2: Select options for drainage, bowl material and differential pressure detection.
When selecting options for several items, list options in order from the top.
*3: NO auto-drain cannot be selected.
*4: Refer to page 354 for the auto-drain usage conditions.
*5: The pipe adaptor set and C type bracket cannot be used together.
*6: The joiner set is enclosed with the pipe adaptor set.

Clean-room specifications (Catalog No. CB-033SA)

● Anti-dust generation structure for use in cleanrooms

MX*000 - ..... - P7*

Flow characteristics (max. processing flow rate)

● MX*000-W

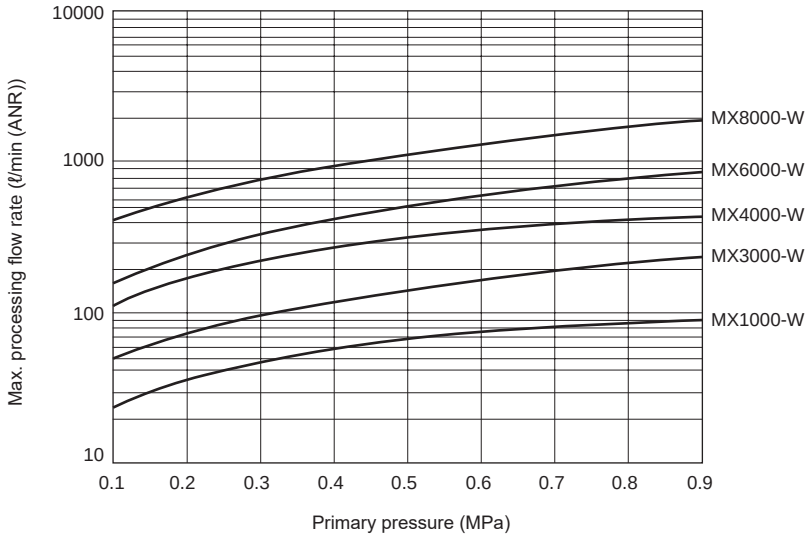

How to select oil mist filter and optional mantle

Major recommended circuit

Applications

◆ S type

F S

General industrial air (Secondary oil concentration 0.5 mg/m^3 or less)

- Air tool
  - Air drill/air screw driver
  - Pneumatic grinder
- Labor-saving device
- Pneumatic jigs and tools
- Air chuck
- Air vice
- Precision part cleaning air blow

◆ M type

F S M

Oil-free air (Secondary oil concentration 0.01 mg/m^3 or less)

- Instrumentation
- Measurement
- For sequence control
  - Movable element/pure fluid element
- Luxury painting
- Precision industry

◆ X type

F S M X

Odorless air (Secondary oil concentration 0.003 mg/m^3 or less)

- Food industry
- Pharmaceutical industry
- Mixing
- Transportation
- Drying
- Packaging
- Brewing air

◆ MX type

F S MX

Super oil-free air (Secondary oil concentration 0.001 mg/m^3 or less)

- Optical positioning device
- Laser finishing machine

Note: The secondary oil concentration is the value when the primary oil concentration is 30 mg/m^3, the inlet air temperature is 21°C, and before the oil is saturated. When using MX, be sure to use the S or M type oil mist filter in the previous stage.

Option code of mantle and shape

	Option code	Appearance
M*000-W	Blank (M type)	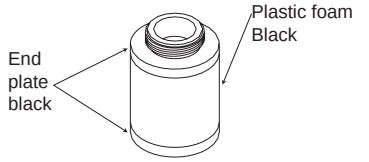
	S (S type)	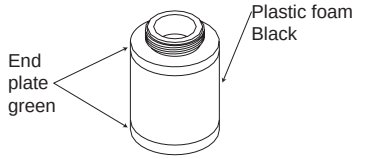
	X (X type)	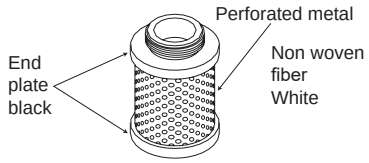
MX*000-W		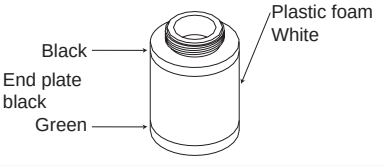

Note: Changes for product upgrades may be made without prior notice.
When placing an order, confirm the option code of the part model No. displayed on the body.

Internal structure and parts list

● MX1000-W

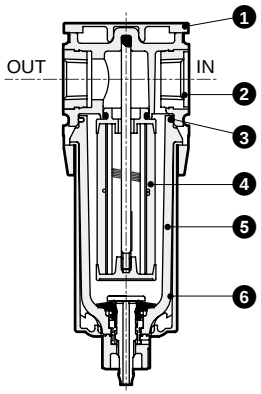

● MX3000-W/MX4000-W

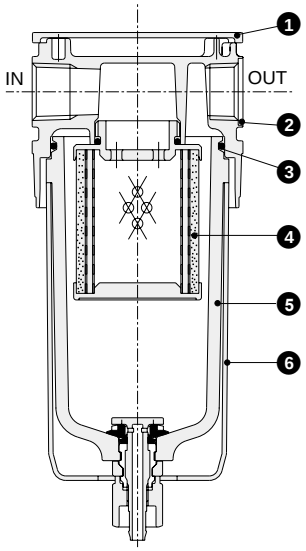

● MX6000-W

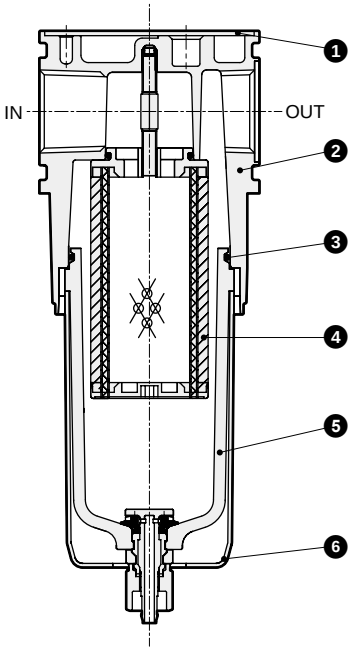

● MX8000-W

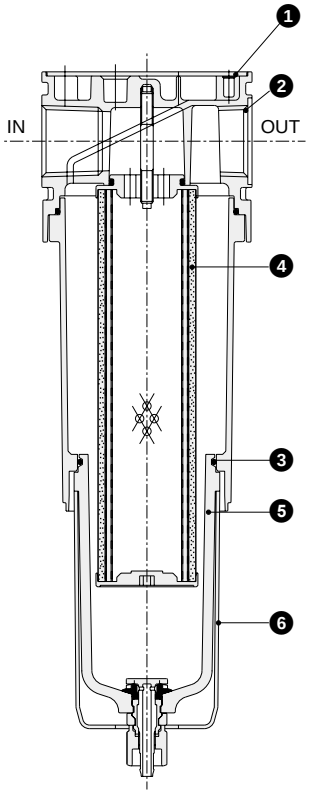

No.	Part name	Material				
		MX1000-W	MX3000-W	MX4000-W	MX6000-W	MX8000-W
1	Plate cover	ABS resin				
2	Body	Polyamide resin	Aluminum alloy die-casting			
3	O-ring *1	Special nitrile rubber				
4	Mantle assembly	-				
5	Bowl assembly	Polycarbonate resin, polyacetal resin, urethane resin				
6	Bowl guard	Polyamide resin	Polyamide resin, steel			

*1: The O-ring of the MX1000-W has a special shape.

Dimensions CAD

● MX1000-W

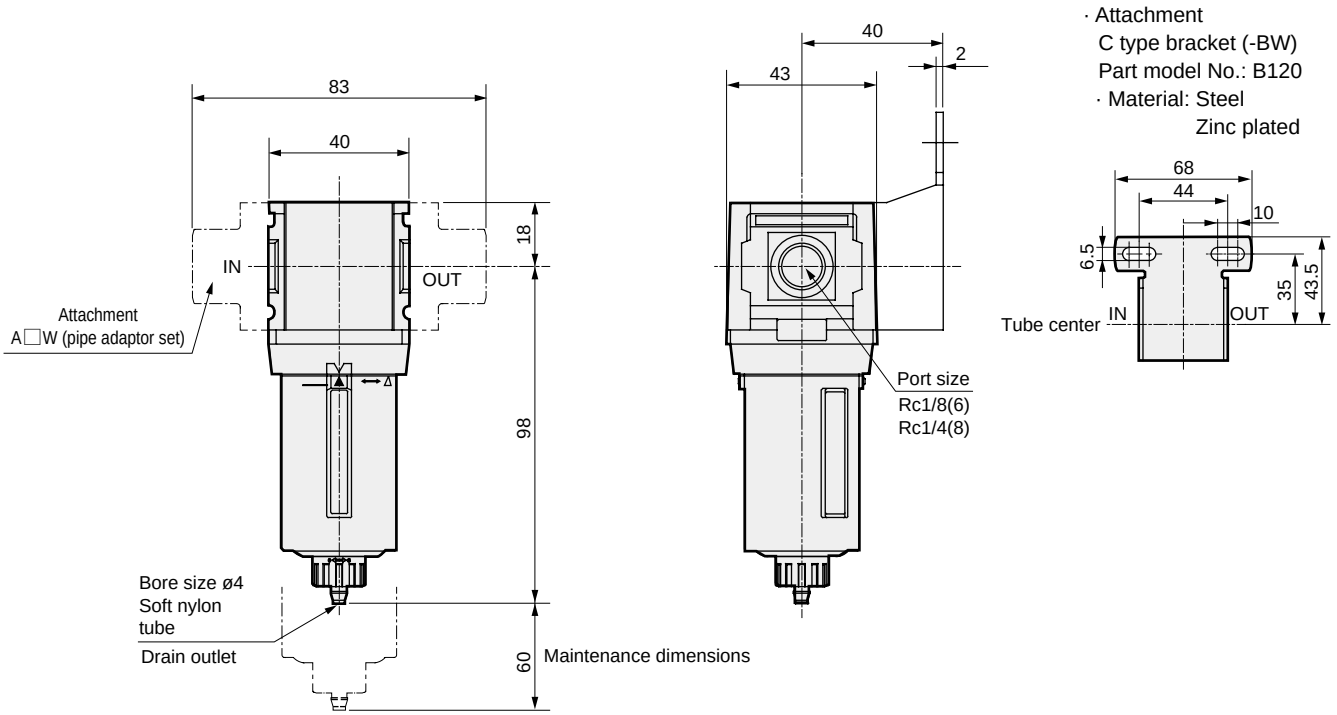

● MX3000-W

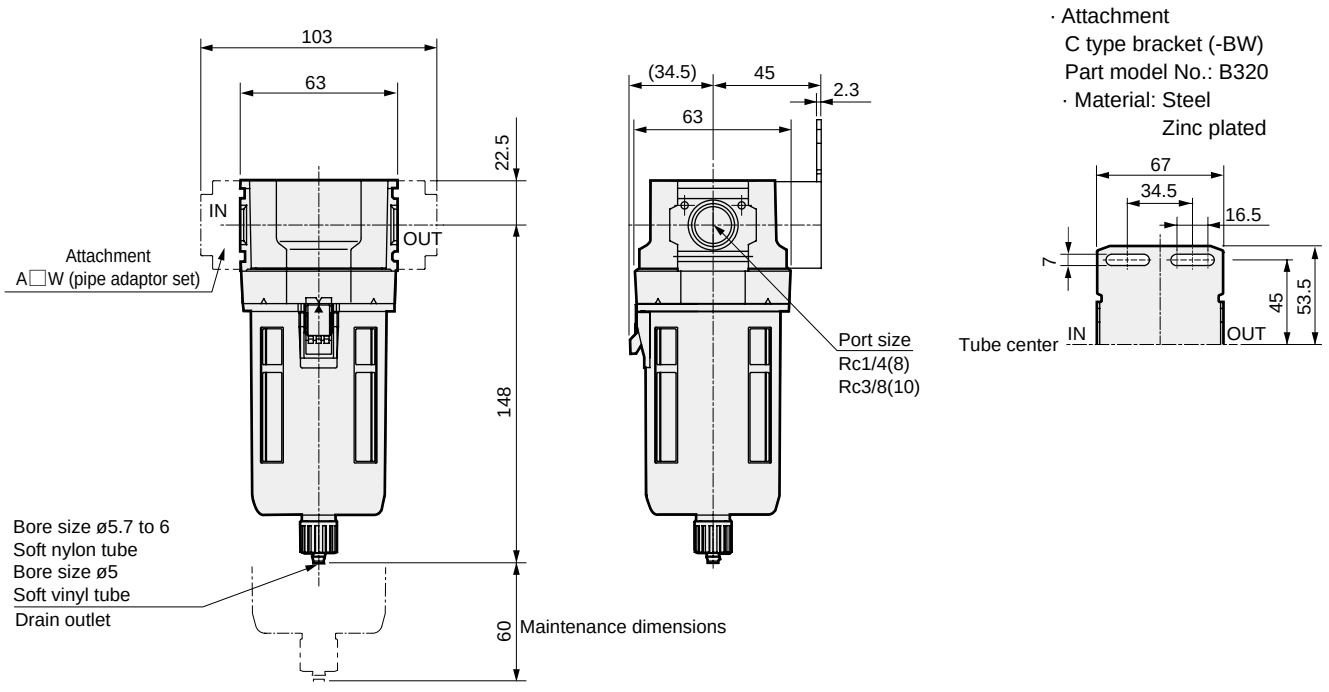

● For the plastic bowl, the dimensions of the manual cock and the auto-drain are the same.
Note: The C type bracket and pipe adaptor set attachments cannot be used together.

Dimensions CAD

● MX4000-W

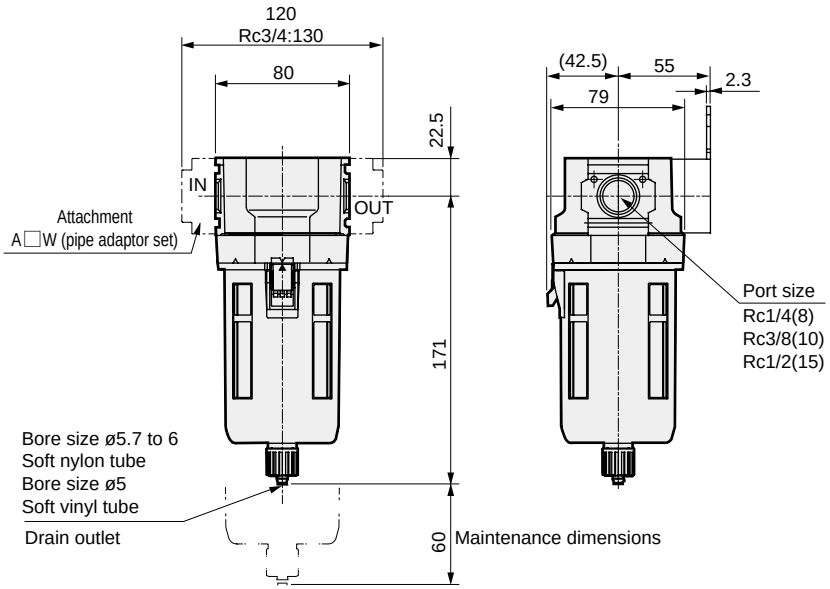

· Attachment
C type bracket (-BW)
Part model No.: B420
· Material: Steel
Zinc plated

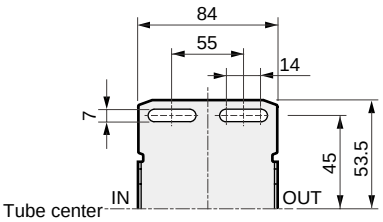

● For the plastic bowl, the dimensions of the manual cock and the auto-drain are the same.

● MX6000-W

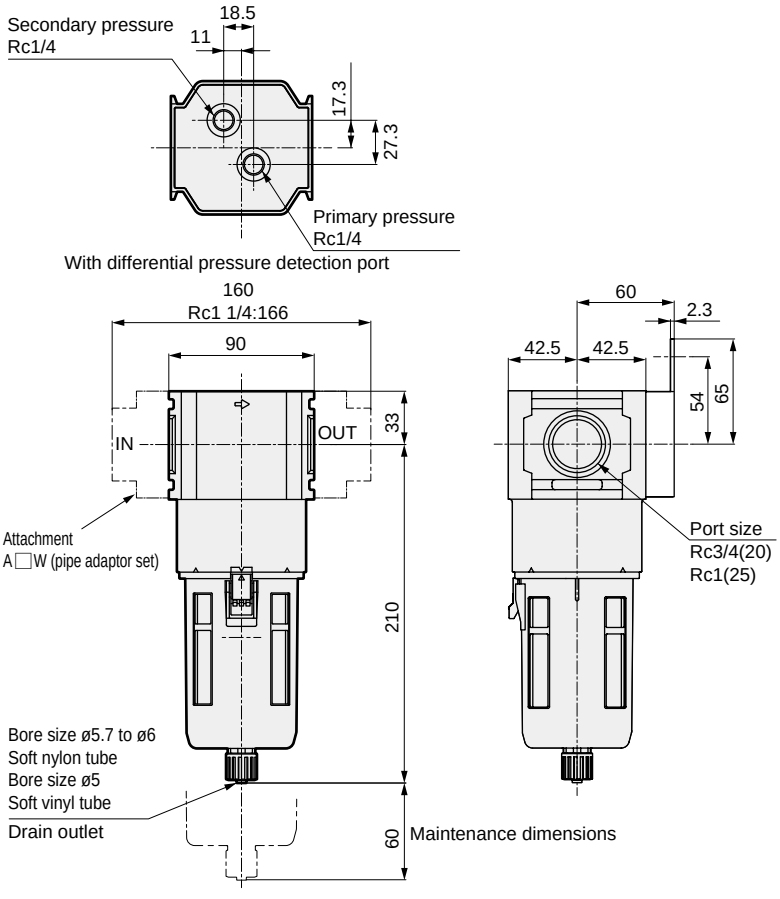

· Attachment
C type bracket (-BW)
Part model No.: B620
· Material: Steel
Zinc plated

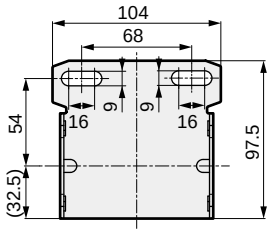

● For the plastic bowl, the dimensions of the manual cock and the auto-drain are the same.
Note: The C type bracket and pipe adaptor set attachments cannot be used together.

Dimensions CAD

● MX8000-W

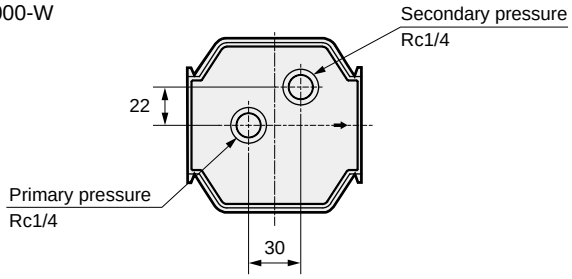

· Attachment
C type bracket (-BW)
Part model No.: B820
· Material: Steel
Zinc plated

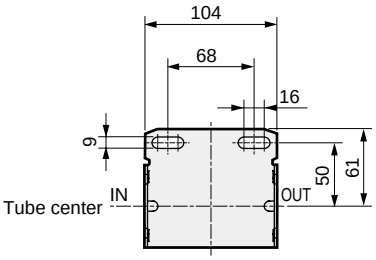

Option
(With differential pressure detection port)

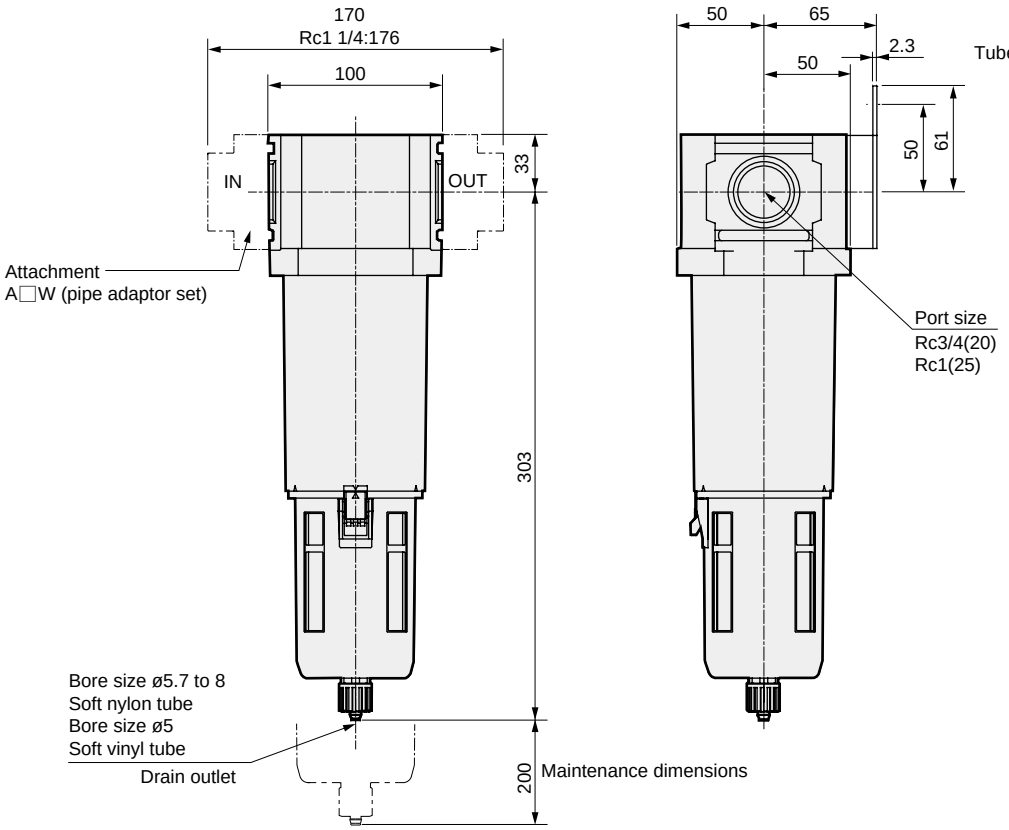

● For the plastic bowl, the dimensions of the manual cock and the auto-drain are the same.

● Metal bowl (option)
[MX3000-W, MX4000-W, MX6000-W, MX8000-W]

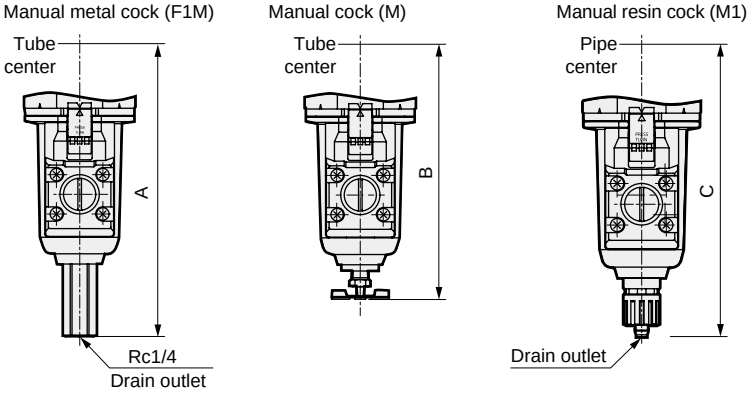

● Material of the metal bowl is aluminum die-casting.

Dimensions table

Model No.	F1M	M	M1
	A	B	C
MX3000-W	164	143.5	154
MX4000-W	187	166.5	177
MX6000-W	226	205	216
MX8000-W	319	298	309

Optional parts list - for oil mist filter

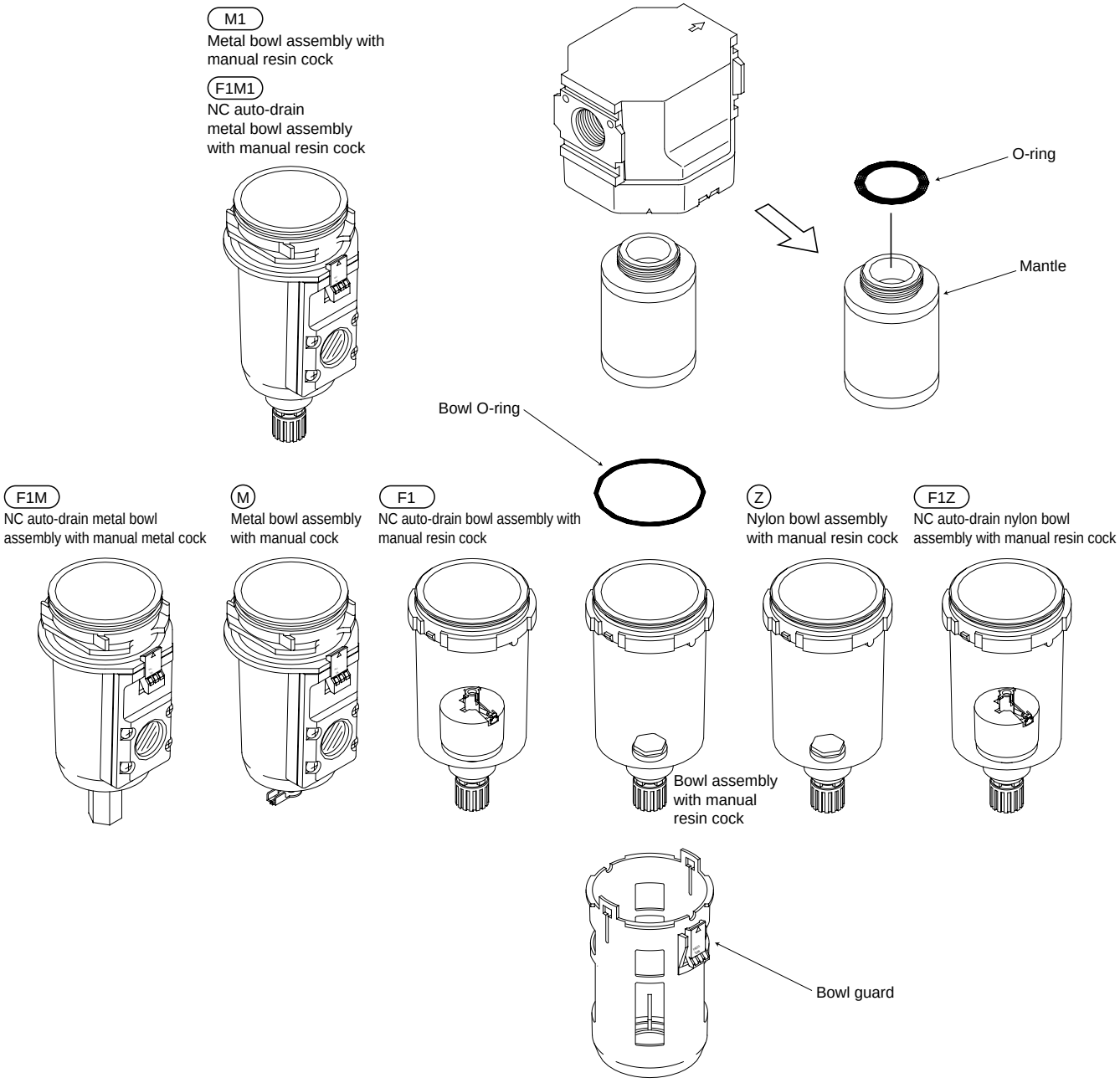

Repair parts kit model No. (set including O-ring, mantle and bowl O-ring)

Model	
MX1000-W	MX1000-KIT
MX3000-W	MX3000-KIT
MX4000-W	MX4000-KIT
MX6000-W	MX6000-KIT
MX8000-W	MX8000-KIT

Repair parts kit model No. (set including O-ring and mantle)

Model	
MX1000-W	MX1000-MANTLE-ASSY
MX3000-W	MX3000-MANTLE-ASSY
MX4000-W	MX4000-MANTLE-ASSY
MX6000-W	MX6000-MANTLE-ASSY
MX8000-W	MX8000-MANTLE-ASSY

* Refer to the air filter options and parts table on pages 114 and 115 for the bowl assembly and bowl guard.



Regulator Standard White Series

R1000/R2000/R3000 R4000/R6000/R8000-W Series

Compact, pressure gauge embedded.

● Port size: 1/8 to 1

JIS symbol 

RoHS CAD

Specifications

Item	R1000-W	R2000-W	R3000-W	R4000-W	R6000-W	R8000-W
Appearance						
Working fluid	Compressed air					
Max. working pressure MPa	1.0 (≈150 psi, 10 bar)					
Proof pressure MPa	1.5 (≈220 psi, 15 bar)					
Ambient / fluid temperatures °C	5 (41°F) to 60 (140°F) *1					
Set pressure MPa	0.05 (≈7.3 psi, 0.5 bar) to 0.85 (≈120 psi, 8.5 bar)					
Pressure relief	With relief mechanism					
Port size Rc,NPT,G	1/8,1/4 (3/8 uses an adaptor)	1/4,3/8 (1/2 uses an adaptor)	1/4,3/8 (1/2 uses an adaptor)	1/4,3/8,1/2 (3/4 uses an adaptor)	3/4,1 (1 1/4 uses an adaptor)	3/4,1 (1 1/4 uses an adaptor)
Weight kg	0.16	0.31	0.45	0.7	1.0	1.6
Standard accessories	Pressure gauge, nut for panel mount					Pressure gauge

*1: The ambient / fluid temperatures is 5 to 50°C for pressure switch with display PPR assembly “RN”/“RP” or digital pressure sensor PPX attachment “R2”.

Option weight

* Add to the weight of the standard accessories.

Unit: kg

Code	Pressure gauge		Pipe adaptor set							Attachment		
	T*	RN/RP	A6*W	A8*W	A10*W	A15*W	A20*W	A25*W	A32*W	BW	B3W	B4W
R1000	0	0.04	0.09	0.09	0.09					0.1	0.04	
R2000	0	0.04		0.16	0.16	0.16				0.15	0.06	0.17
R3000	0	0.04		0.16	0.16	0.16				0.17	0.07	
R4000	0	0.04		0.16	0.16	0.16	0.16			0.21	0.11	
R6000	0	0.04					0.53	0.53	0.53	0.34	0.11	
R8000	0	0.04					0.53	0.53	0.53	0.36		

Code	Attachment					
	G45P	G49P	G59P	G40P	G52P	R2
R1000	0.074	0.086	0.115	0.085	0.15	0.04
R2000	0.074	0.086	0.115	0.085	0.15	0.04
R3000	0.074	0.086	0.115	0.085	0.15	0.04
R4000	0.074	0.086	0.115	0.085	0.15	0.04
R6000	0.074	0.086	0.115	0.085	0.15	0.04
R8000	0.074	0.086	0.115	0.085	0.15	0.04

Ozone-proof specs (Ending Page 12)

R*000 - … - W… - P11

Clean-room specs (Catalog No. CB-033SA)

● Anti-dust generation structure for use in cleanrooms

R*000 - …… - P7*

Specs for rechargeable battery (Catalog No. CC-1226A)

● Structure compatible with rechargeable battery manufacturing process

R*000 - …… - P4*

How to order



* Refer to page 30 for the explanation of the option.

Code	Description	Ⓐ Model No. R1000	R2000	R3000	R4000	R6000	R8000
Ⓑ Port size							
6	1/8	●					
8	1/4	●	●	●	●		
10	3/8		●	●	●		
15	1/2				●		
20	3/4					●	●
25	1					●	●
Ⓒ Port thread							*1
Blank	Rc thread	●	●	●	●	●	●
N	NPT thread	●	●	●	●	●	●
G	G thread	●	●	●	●	●	●
Ⓓ Option							*2
Pressure range **Blank**	0.05 to 0.85 MPa	●	●	●	●	●	●
L	0.05 to 0.35 MPa *3	●	●	●	●	●	●
Pressure relief **Blank**	With relief mechanism	●	●	●	●	●	●
N	Non-relief	●	●	●	●	●	●
Pressure gauge **Blank**	With standard pressure gauge (G401-W)	●	●	●	●	●	●
T	No pressure gauge (gauge port (1/4) is assembled sealed)	●	●	●	●	●	●
T8	Pressure gauge ready (gauge port (1/4) is left open)	●	●	●	●	●	●
T6	Digital pressure sensor PPX attachment option *4	●	●	●	●	●	●
RN	Pressure switch with display, PPR assembled (NPN output 1 point)	●	●	●	●	●	●
RP	Pressure switch with display, PPR assembled (PNP output 1 point)	●	●	●	●	●	●
Flow direction **Blank**	Standard flow (left → right), knob downward	●	●	●	●	●	●
X1	Reverse flow (right → left), knob downward	●	●	●	●	●	●
X2	Standard flow (left → right), knob upward	●	●	●	●	●	●
X3	Reverse flow (right → left), knob upward	●	●	●	●	●	●
Ⓔ Unit indicated							
Blank	MPa display (Rc thread), psi display (NPT thread)), bar display (G thread)	●	●	●	●	●	●
J1	MPa display (NPT, G threads)	●	●	●	●	●	●
Ⓕ Pipe adaptor set (attachments)							*5, *6 Page 350
Blank	Not included	●	●	●	●	●	●
A6*W	1/8 pipe adaptor set	●					
A8*W	1/4 pipe adaptor set	●	●	●	●		
A10*W	3/8 pipe adaptor set	●	●	●	●		
A15*W	1/2 pipe adaptor set		●	●	●		
A20*W	3/4 pipe adaptor set				●	●	●
A25*W	1 pipe adaptor set					●	●
A32*W	1 1/4 pipe adaptor set					●	●
*** Adaptor thread**							
Blank	Rc thread	●	●	●	●	●	●
N	NPT thread	●	●	●	●	●	●
G	G thread	●	●	●	●	●	●
Ⓖ Attachment							*7 Pages 346 and 363
Blank	Not included	●	●	●	●	●	●
BW	C-bracket	●	●	●	●	●	●
B3W	L-bracket *8	●	●	●	●	●	
B4W	B-bracket		●				
G45P	G45D-8-P10 (L: G45D-8-P04)	●	●	●	●	●	●
G49P	G49D-8-P10(L:G49D-8-P04)	●	●	●	●	●	●
G59P	G59D-8-P10(L:G59D-8-P04)	●	●	●	●	●	●
G40P	G40D-8-P10(L:G40D-8-P04)	●	●	●	●	●	●
G52P	G52D-8-P10(L:G52D-8-P10)	●	●	●	●	●	●
R 2 *4	Digital pressure sensor: PPX-R1ON-6M	●	●	●	●	●	●

⚠ Precautions for model No. selection

*1: G threads and NPT threads are available for IN, OUT and gauge ports.
*2: When selecting options for several items, list options in order from the top.
*3: The pressure gauge's indication range is 0 to 0.4 MPa for the option "L".
*4: When the option "T6" is selected, only "Blank" or "R2" can be selected for Ⓖ Other attachments. The digital pressure sensor PPX mounting port (Rc1/8) is left open.
*5: The pipe adaptor set and C-bracket cannot be used together.
*6: The joiner set is enclosed with the pipe adaptor set.
*7: The pressure gauge and digital pressure sensor (included) can be selected only when Ⓒ Port thread is Rc thread.
*8: For details on mounting the L-bracket, refer to (2. Regulator) of "⚠Cautions and Installation & Adjustment" (page 357).
*9: Display unit options when selecting NPT threads: If Blank is selected, the pressure unit is psi and the temperature display unit is °F.
When G thread and Blank display unit option are selected, the pressure unit will be bar and the temperature display unit will be °C.
When NPT/G thread and "J1" display unit option are selected, the pressure unit will be MPa and the temperature display unit will be °C.

Flow characteristics

● R1000-6-W

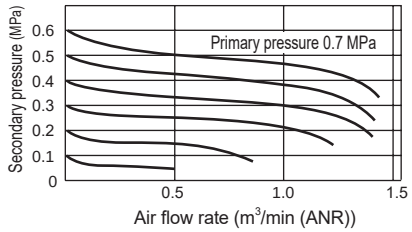

● R1000-8-W

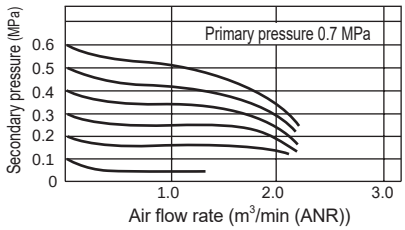

● R2000-8-W

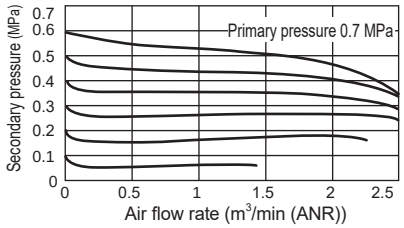

● R2000-10-W

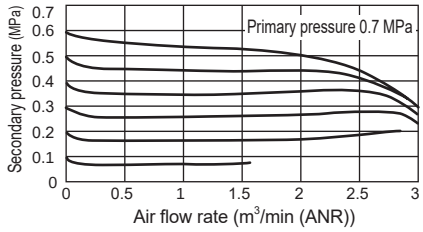

● R3000-8-W

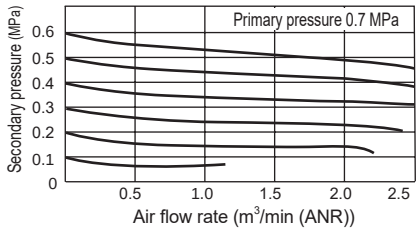

● R3000-10-W

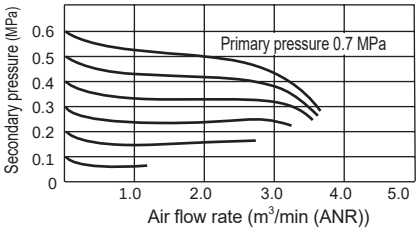

● R4000-8-W

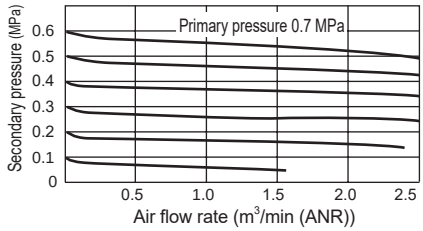

● R4000-10-W

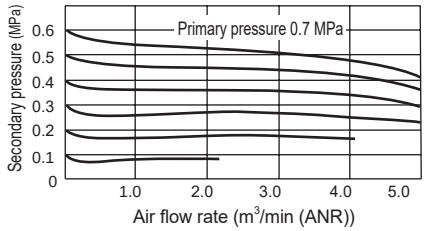

● R4000-15-W

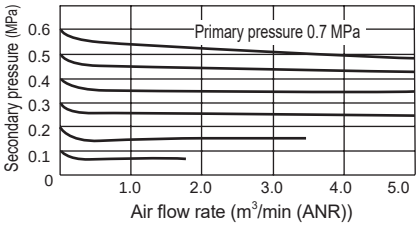

● R6000-20-W

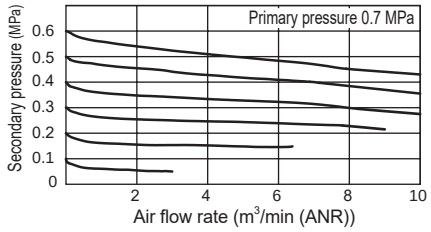

● R6000-25-W

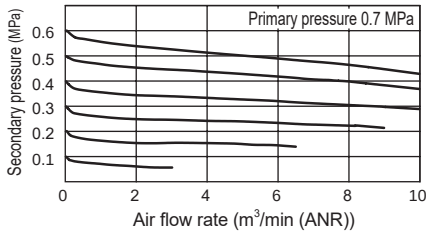

● R8000-20-W

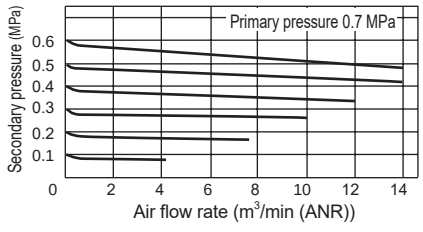

● R8000-25-W

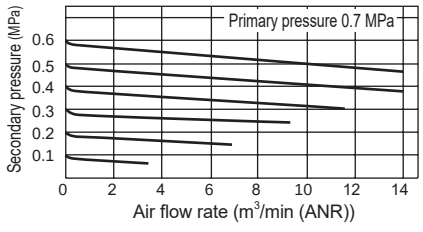

Pressure characteristics

● R1000-W

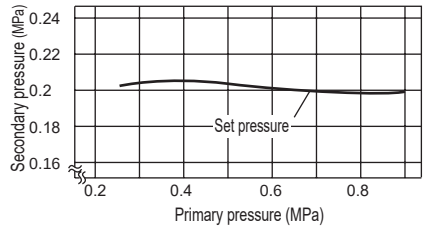

● R2000-W

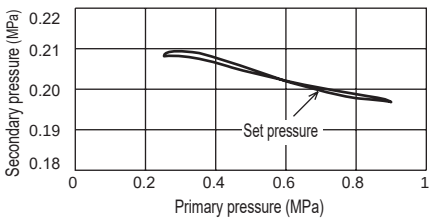

● R3000-W

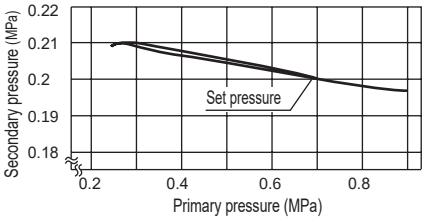

● R4000-W

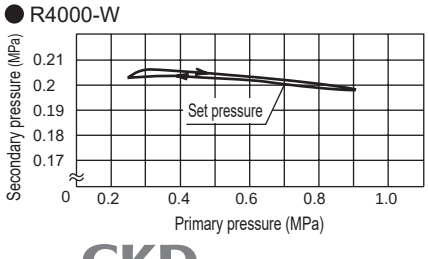

● R6000-W

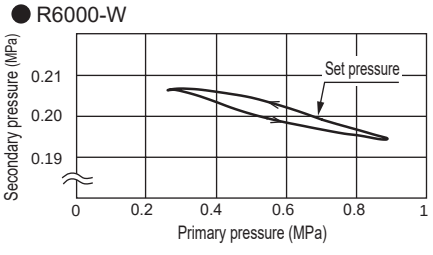

● R8000-W

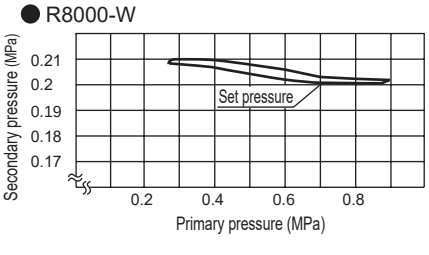

Internal structure and parts list

● R1000-W

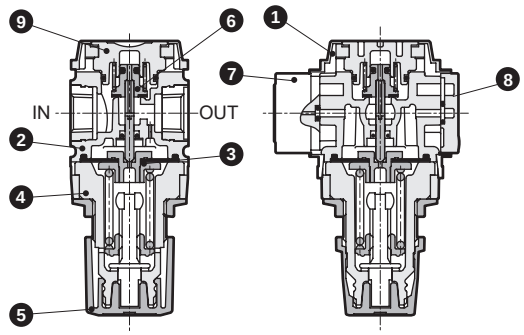

● R2000-W

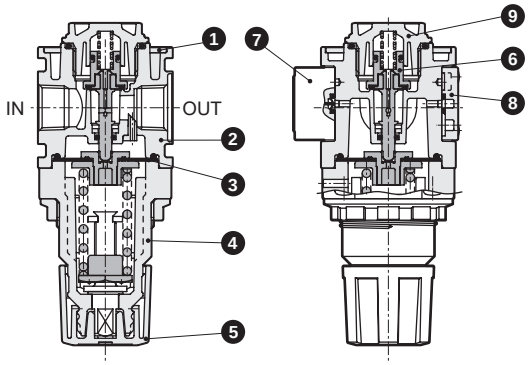

● R3000-W/R4000-W

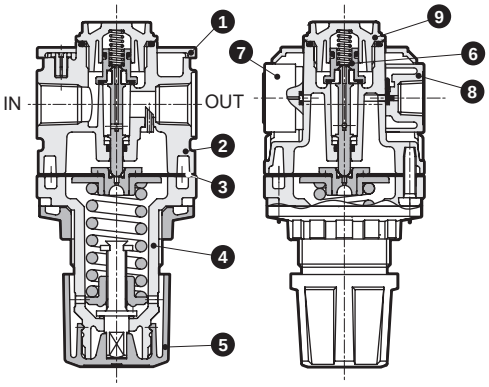

● R6000-W

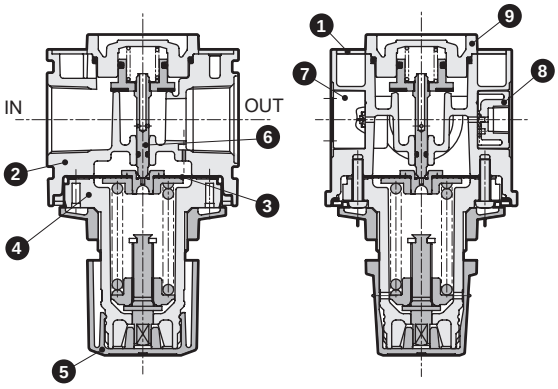

● R8000-W

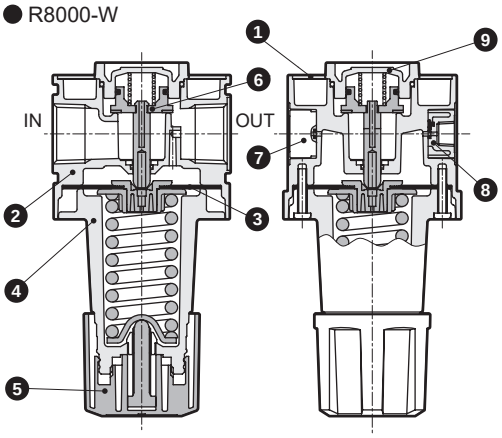

No.	Part name	Material					
		R1000-W	R2000-W	R3000-W	R4000-W	R6000-W	R8000-W
1	Plate cover	ABS resin					
2	Body	Polyamide resin, steel	Aluminum alloy die-casting	Aluminum alloy die-casting			
3	Diaphragm assembly	Polyacetal resin nitrile rubber		Zinc alloy die-casting, nitrile rubber *3			
4	Cover	Polyamide resin	PBT resin				Aluminum alloy die-casting
5	Knob	Polyacetal resin					
6	Valve assembly	Copper alloy, hydrogenated nitrile rubber (polyacetal resin: R2000, R3000, 4000, 8000)					
7	Pressure gauge assembly	PBT resin, nitrile rubber, polyacetal resin, polycarbonate resin, copper alloy, steel					
8	Gauge plug assembly	-	-	Polyamide resin, nitrile rubber, steel			
	Blanking plug assembly *1	PBT resin, nitrile rubber, copper		-		-	-
9	Bottom plug *4	Polyacetal resin				Aluminum alloy die-casting	

*1: A blanking plug is attached to R1000-W and R2000-W standard types.
*2: Refer to page 151 for repair parts.
*3: Aluminum is added for the R6000-W low-pressure type.
*4: The material of RM3000-W and RM4000-W Series is aluminum die-casting.

Dimensions CAD

● R1000-W

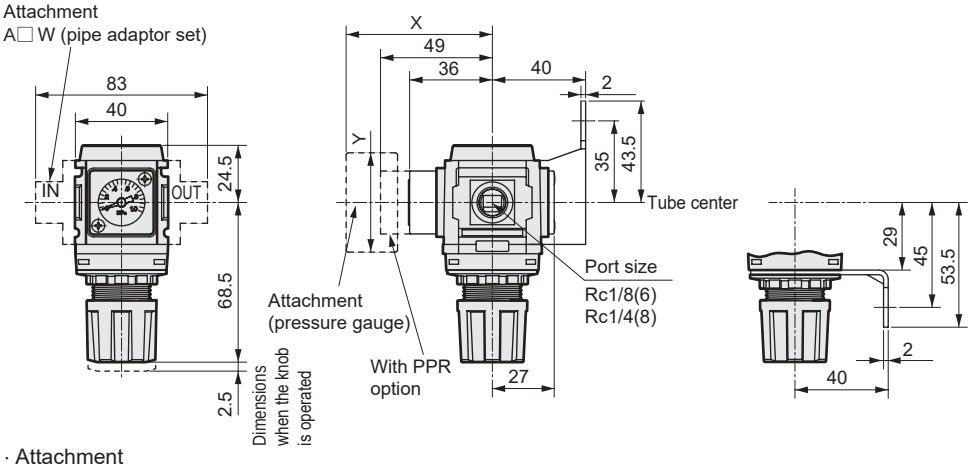

Panel cut dimension



Panel plate thickness: max. 6 mm

Pressure gauge attached optional dimensions table

Pressure gauge	X	Y
G45P	(74)	ø39
G49P	(73.5)	ø43.5
G59P	(76)	ø52
G40P	(75.5)	ø42.5
G52P	(86)	ø52.5
R2	(74)	□30

· Attachment
C-bracket (-BW)
Part model No.: B120
· Material: Steel
Zinc plated

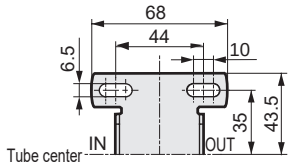

L-bracket (-B3W) Part model No.: B130
· Material: Steel
Zinc plated

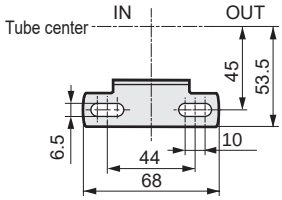

● R2000-W

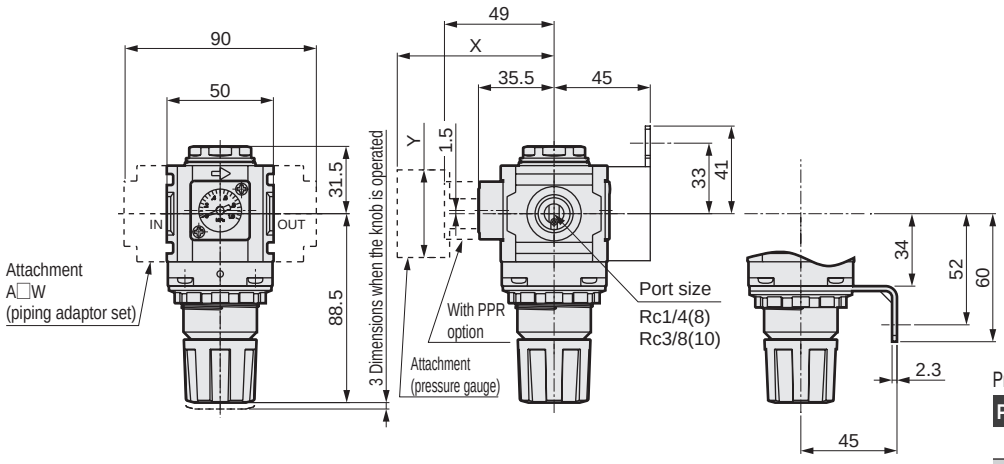

Panel cut dimension

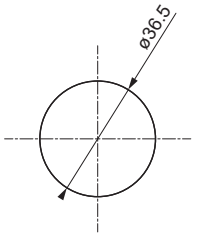

Panel plate thickness: max. 4 mm

Pressure gauge attached optional dimensions table

Pressure gauge	X	Y
G45P	(73.5)	ø39
G49P	(73)	ø43.5
G59P	(75.5)	ø52
G40P	(75)	ø42.5
G52P	(85.5)	ø52.5
R2	(73)	□30

● L-bracket (-B3W)
Part model No.: B230
· Material: Steel
Zinc plated

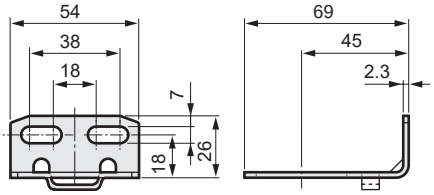

● C-bracket (-BW)
Part model No.: B220
· Material: Steel
Zinc plated

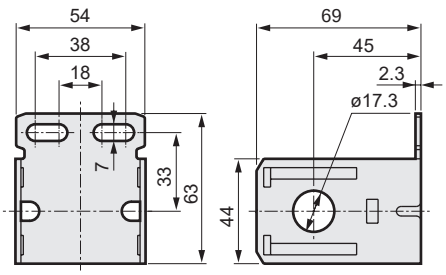

● B-bracket (-B4W)
Part model No.: B240
· Material: Steel
Zinc plated

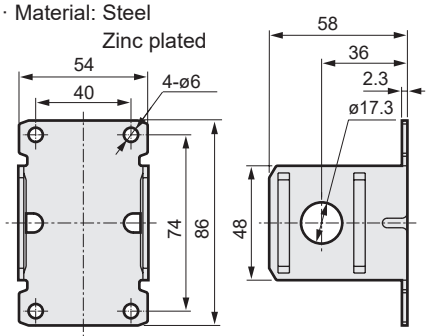

Dimensions

● R3000-W

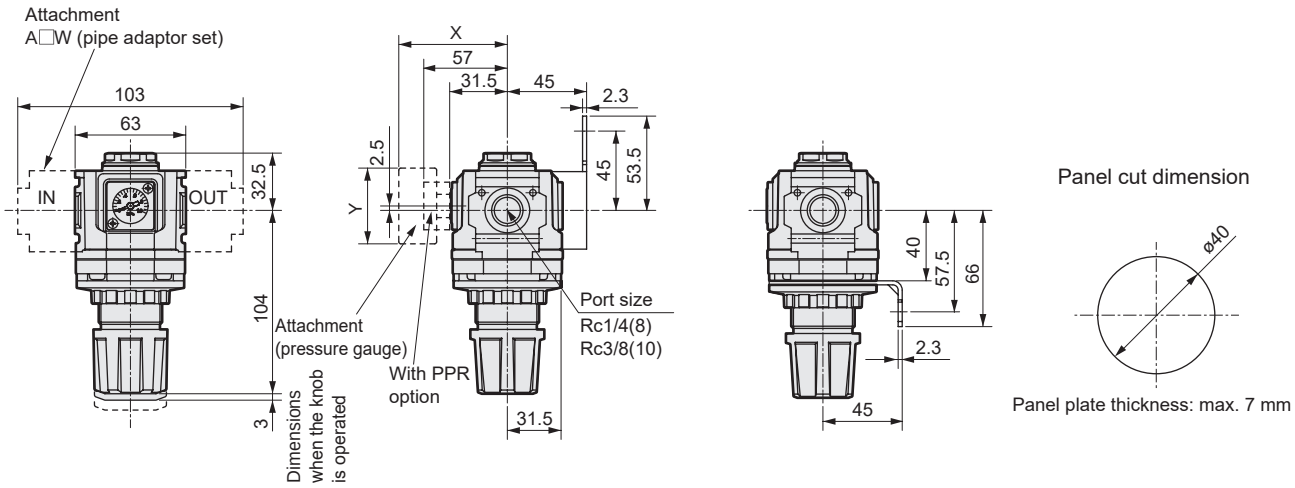

· Attachment (C-bracket)
C-bracket (-BW)
Part model No.: B320
· Material: Steel
Zinc plated

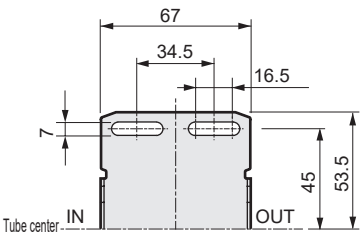

L-bracket (-B3W)
Part model No.: B330
· Material: Steel
Zinc plated

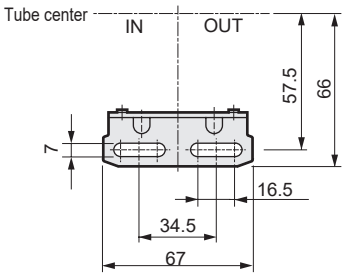

Pressure gauge attached optional dimensions table

Pressure gauge	X	Y
G45P	(70)	ø39
G49P	(69.5)	ø43.5
G59P	(72)	ø52
G40P	(71.5)	ø42.5
G52P	(82)	ø52.5
R2	(69.5)	□30

● R4000-W

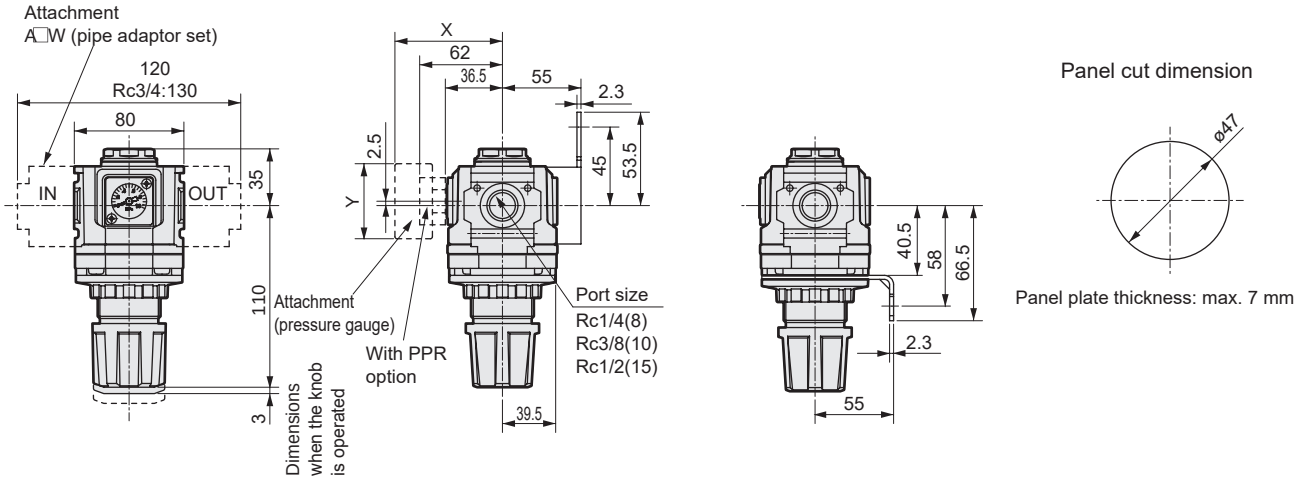

· Attachment
C-bracket (-BW)
Part model No.: B420
· Material: Steel
Zinc plated

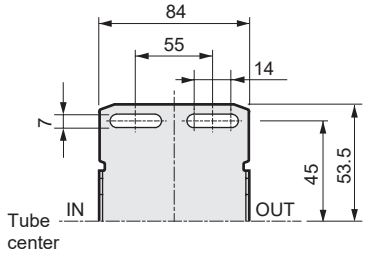

L-bracket (-B3W)
Part model No.: B430
· Material: Steel
Zinc plated

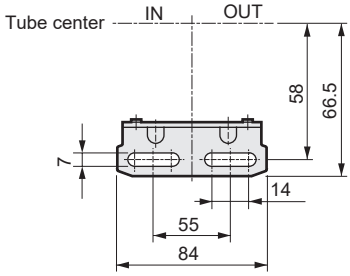

Pressure gauge attached optional dimensions table

Pressure gauge	X	Y
G45P	(75)	ø39
G49P	(74.5)	ø43.5
G59P	(77)	ø52
G40P	(76.5)	ø42.5
G52P	(86)	ø52.5
R2	(75)	□30

Dimensions CAD

● R6000-W

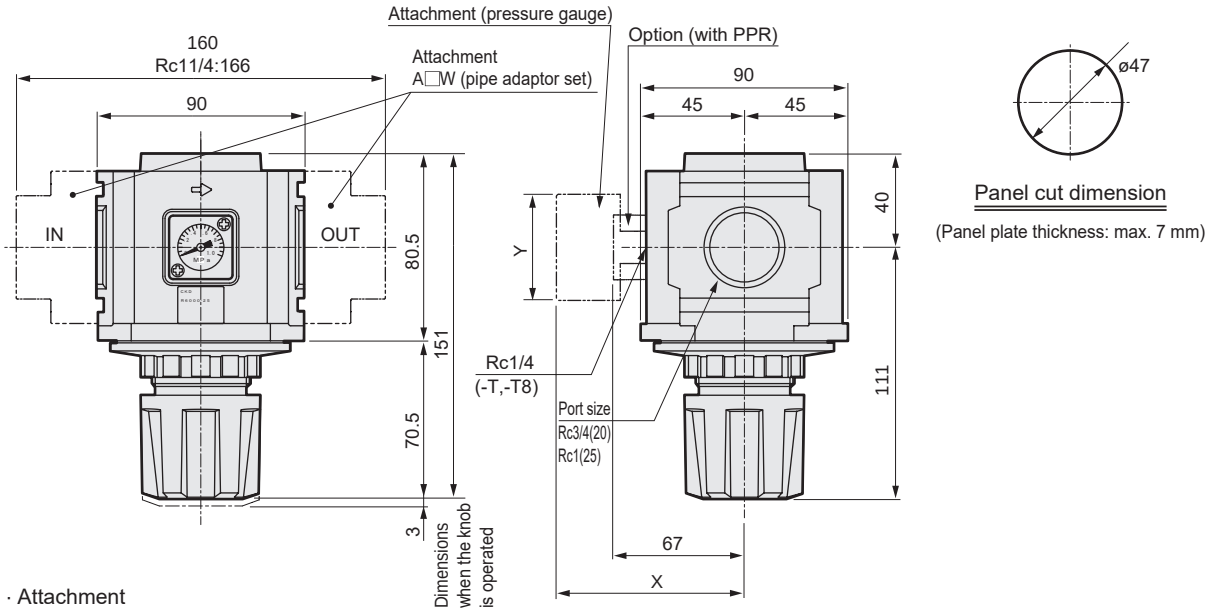

· Attachment
C-bracket (-BW)
Part model No.: B620
· Material: Steel
Zinc plated

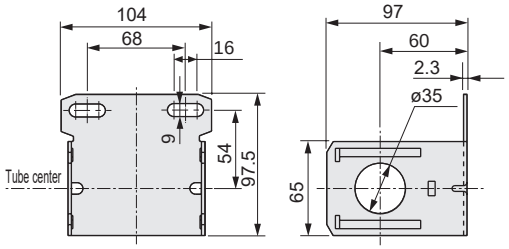

L-bracket (-B3W)
Part model No.: B430
· Material: Steel
Zinc plated

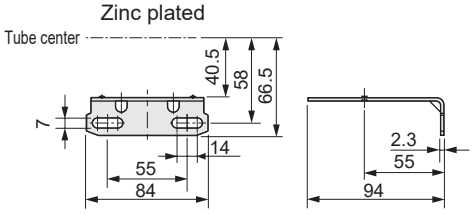

Pressure gauge attached optional dimensions table

Pressure gauge	X	Y
G45P	(80)	ø39
G49P	(79.5)	ø43.5
G59P	(82)	ø52
G40P	(81.5)	ø42.5
G52P	(93)	ø52.5
R2	(80)	□30

● R8000-W

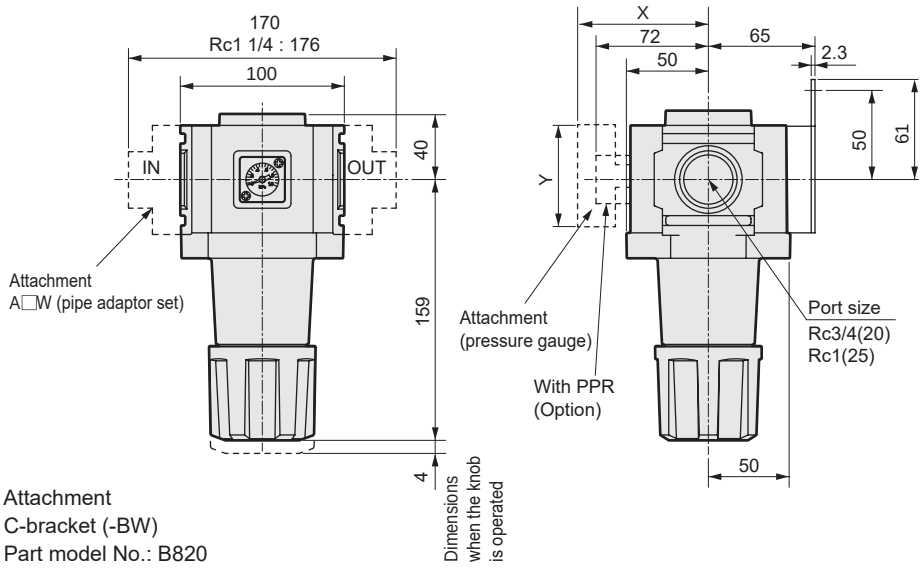

· Attachment
C-bracket (-BW)
Part model No.: B820
· Material: Steel
Zinc plated

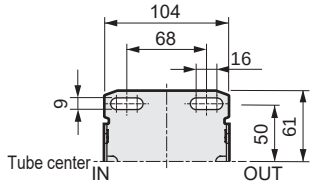

Pressure gauge attached optional dimensions table

Pressure gauge	X	Y
G45P	(85)	ø39
G49P	(84.5)	ø43.5
G59P	(87)	ø52
G40P	(86.5)	ø42.5
G52P	(98)	ø52.5
R2	(85)	□30

MEMO



Reverse regulator Standard White Series

R1100/R2100/R3100 R4100/R6100/R8100-W Series

From secondary pressure to primary side with reverse flow function built in.

● Port size: 1/8 to 1

JIS symbol

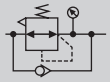

RoHS CAD

Specifications

Item	R1100-W	R2100-W	R3100-W	R4100-W	R6100-W	R8100-W
Appearance						
Working fluid	Compressed air					
Max. working pressure MPa	1.0 (≈150 psi, 10 bar)					
Proof pressure MPa	1.5 (≈220 psi, 15 bar)					
Ambient / fluid temperatures °C	5 (41°F) to 60 (140°F) *2					
Set pressure (*1) MPa	0.05 (≈7.3 psi, 0.5 bar) to 0.85 (≈120 psi, 8.5 bar)					
Pressure relief	With relief mechanism					
Port size Rc,NPT,G	1/8,1/4 (3/8 uses an adaptor)	1/4,3/8 (1/2 uses an adaptor)	1/4,3/8 (1/2 uses an adaptor)	1/4,3/8,1/2 (3/4 uses an adaptor)	3/4,1 (1 1/4 uses an adaptor)	3/4,1 (1 1/4 uses an adaptor)
Weight kg	0.16	0.31	0.45	0.7	1.0	1.6
Standard accessories	Pressure gauge, nut for panel mount					Pressure gauge

*1: Refer to the set pressure range for the back pressure given on page 146 when selecting the model.
*2: The ambient / fluid temperatures is 5 to 50°C for the pressure switch with display PPR assembly “RN”/“RP” or digital pressure sensor PPX attachment “R2”.
*3: Check that the primary pressure is at least 0.05 MPa more than the secondary pressure.

Option weight

* Add to the weight of the standard accessories.

Unit: kg

Code	Pressure gauge		Pipe adaptor set							Attachment		
	T*	RN/RP	A6*W	A8*W	A10*W	A15*W	A20*W	A25*W	A32*W	BW	B3W	B4W
R1100	0	0.04	0.09	0.09	0.09					0.1	0.04	
R2100	0	0.04		0.16	0.16	0.16				0.15	0.06	0.17
R3100	0	0.04		0.16	0.16	0.16				0.17	0.07	
R4100	0	0.04		0.16	0.16	0.16	0.16			0.21	0.11	
R6100	0	0.04					0.53	0.53	0.53	0.34	0.11	
R8100	0	0.04					0.53	0.53	0.53	0.36		

Code	Attachment					
	G45P	G49P	G59P	G40P	G52P	R2
R1100	0.074	0.086	0.12	0.085	0.15	0.04
R2100	0.074	0.086	0.12	0.085	0.15	0.04
R3100	0.074	0.086	0.12	0.085	0.15	0.04
R4100	0.074	0.086	0.12	0.085	0.15	0.04
R6100	0.074	0.086	0.12	0.085	0.15	0.04
R8100	0.074	0.086	0.12	0.085	0.15	0.04

Ozone-proof specs (Ending Page 13)

R*100 - …W… - P11

Clean-room specs (Catalog No. CB-033SA)

● Anti-dust generation structure for use in cleanrooms

R*100 - …… - P7*

Specs for rechargeable battery (Catalog No. CC-1226A)

● Structure compatible with rechargeable battery manufacturing process

R*100 - …… - P4*

How to order



* Refer to page 30 for the explanation of the option.

Code	Description	Model No. R1100	R2100	R3100	R4100	R6100	R8100
Ⓑ Port size							
6	1/8	●					
8	1/4	●	●	●	●		
10	3/8		●	●	●		
15	1/2				●		
20	3/4					●	●
25	1					●	●
Ⓒ Port thread							*1
Blank	Rc thread	●	●	●	●	●	●
N	NPT thread	●	●	●	●	●	●
G	G thread	●	●	●	●	●	●
Ⓓ Option							*2, *3
Pressure range **Blank**	0.05 to 0.85 MPa	●	●	●	●	●	●
Pressure range **L**	0.05 to 0.35 MPa *4	●	●	●	●	●	●
Pressure relief **Blank**	With relief mechanism	●	●	●	●	●	●
Pressure relief **N**	Non-relief	●	●	●	●	●	●
Pressure gauge **Blank**	With standard pressure gauge (G401-W)	●	●	●	●	●	●
Pressure gauge **T**	No pressure gauge (gauge port (1/4) is assembled sealed)	●	●	●	●	●	●
Pressure gauge **T8**	Pressure gauge ready (gauge port (1/4) is left open)	●	●	●	●	●	●
Pressure gauge **T6**	Digital pressure sensor PPX included option *5	●	●	●	●	●	●
Pressure gauge **RN**	Pressure switch with display PPR mounted (NPN output 1 point)	●	●	●	●	●	●
Pressure gauge **RP**	Pressure switch with display PPR mounted (PNP output 1 point)	●	●	●	●	●	●
Flow direction **Blank**	Standard flow (left → right), knob downward	●	●	●	●	●	●
Flow direction **X1**	Reverse flow (right → left), knob downward	●	●	●	●	●	●
Flow direction **X2**	Standard flow (left → right), knob upward	●	●	●	●	●	●
Flow direction **X3**	Reverse flow (right → left), knob upward	●	●	●	●	●	●
Ⓔ Display unit							
Blank	MPa display (Rc thread), psi display (NPT thread), bar display (G thread)	●	●	●	●	●	●
J1	MPa display (NPT, G thread)	●	●	●	●	●	●
Ⓕ Pipe adaptor set (included)							*6, *7 Page 350
Blank	Not included	●	●	●	●	●	●
A6*W	1/8 pipe adaptor set	●					
A8*W	1/4 pipe adaptor set	●	●	●	●		
A10*W	3/8 pipe adaptor set	●	●	●	●		
A15*W	1/2 pipe adaptor set		●	●	●		
A20*W	3/4 pipe adaptor set				●	●	●
A25*W	1 pipe adaptor set					●	●
A32*W	1 1/4 pipe adaptor set					●	●
*** Adaptor thread**							
Blank	Rc thread	●	●	●	●	●	●
N	NPT thread	●	●	●	●	●	●
G	G thread	●	●	●	●	●	●
Ⓖ Other attachments							*8 Pages 346, 363
Blank	Not included	●	●	●	●	●	●
BW	C-bracket	●	●	●	●	●	●
B3W	L-bracket *9	●	●	●	●	●	
B4W	B-bracket		●				
G45P	G45D-8-P10(L:G45D-8-P04)	●	●	●	●	●	●
G49P	G49D-8-P10(L:G49D-8-P04)	●	●	●	●	●	●
G59P	G59D-8-P10(L:G59D-8-P04)	●	●	●	●	●	●
G40P	G40D-8-P10(L:G40D-8-P04)	●	●	●	●	●	●
G52P	G52D-8-P10(L:G52D-8-P10)	●	●	●	●	●	●
R2 *5	Digital pressure sensor: PPX-R1ON-6M	●	●	●	●	●	●

⚠ Precautions for model No. selection

*1: G and NPT threads are available for IN, OUT and gauge ports.
*2: When selecting options for several items, list options in order from the top.
3: Positions of check valve and pressure gauge cannot be changed. If the IN and OUT directions must be reversed, indicate "X1" at the end of the option field.
*4: The pressure gauge's indication range is 0 to 0.4 MPa for the option "L".
*5: When the option "T6" is selected, only "Blank" or "R2" can be selected for Ⓖ Other attachments. The digital pressure sensor PPX mounting port (Rc1/8) is left open.
*6: The pipe adaptor set and C-bracket cannot be used together.
*7: The joiner set is enclosed with the pipe adaptor set.
*8: The pressure gauge and digital pressure sensor (included) can be selected only when Ⓒ Port thread is Rc thread.
*9: For details on mounting the L-bracket, refer to (2. Regulator) of "⚠ Cautions and Installation & Adjustment" (page 357).
*10: Display unit options when selecting NPT threads: If Blank is selected, the pressure unit is psi and the temperature display unit is °F.
When G thread and Blank display unit option are selected, the pressure unit will be bar and the temperature display unit will be °C.
When NPT/G thread and "J1" display unit option are selected, the pressure unit will be MPa and the temperature display unit will be °C.

Flow characteristics

● R1100-6-W

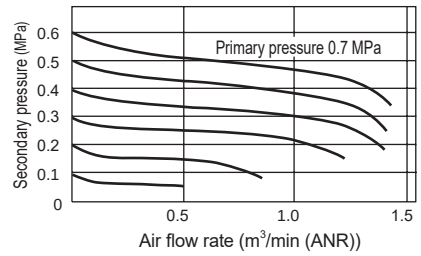

● R1100-8-W

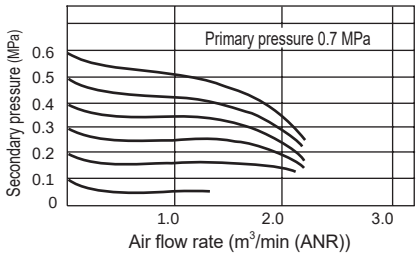

● R2100-8-W

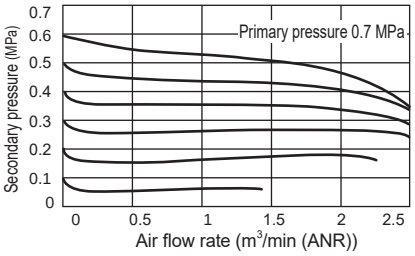

● R2100-10-W

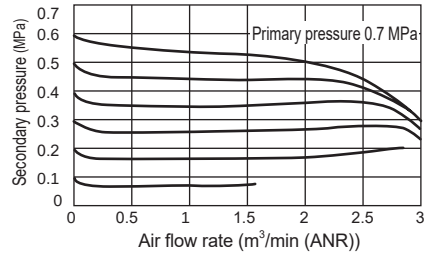

● R3100-8-W

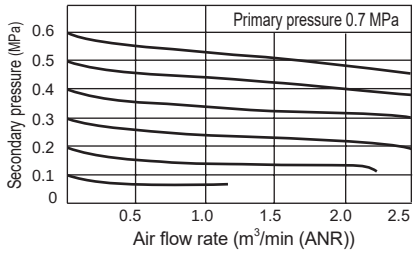

● R3100-10-W

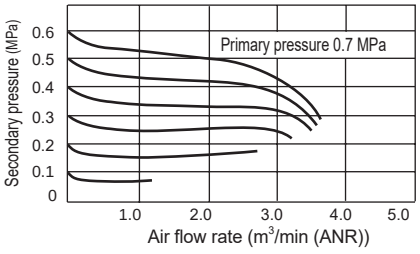

● R4100-8-W

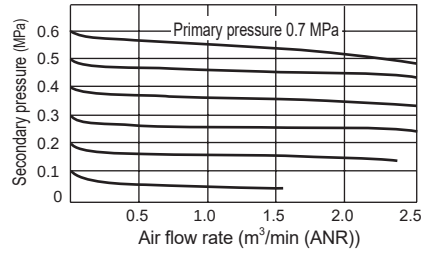

● R4100-10-W

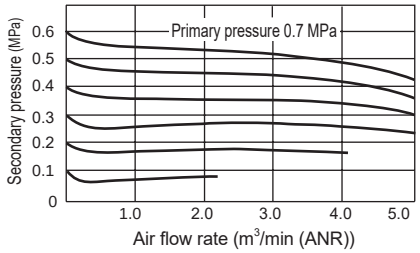

● R4100-15-W

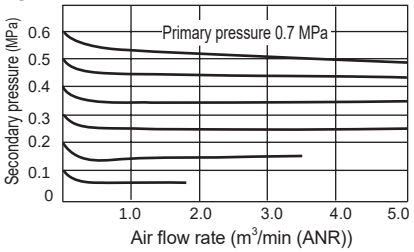

● R6100-20-W

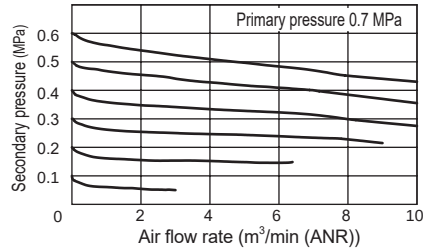

● R6100-25-W

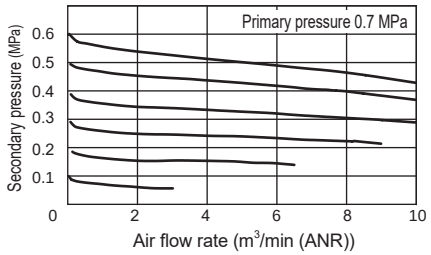

● R8100-20-W

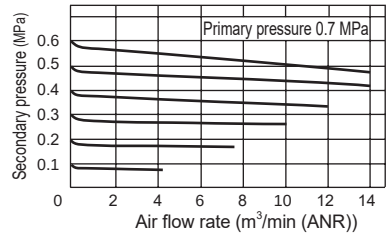

● R8100-25-W

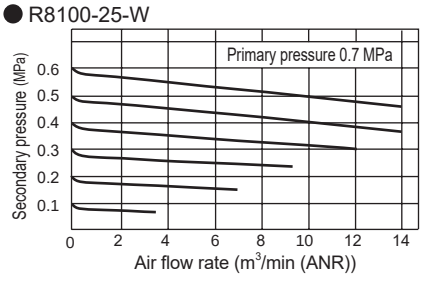

● Set pressure range to back pressure

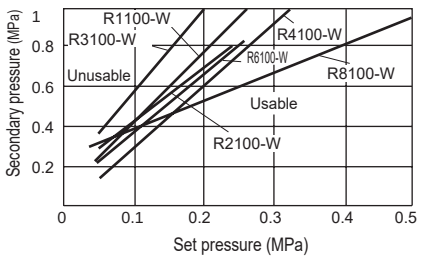

Note: The area above the graph line shows the unusable range and that below the graph line shows the usable range.

Example: If R4100-W is set to the set pressure 0.2 MPa and the secondary back pressure is 0.6 MPa and over, the secondary pressure will not be released to the primary side.

Pressure characteristics

● R1100-W

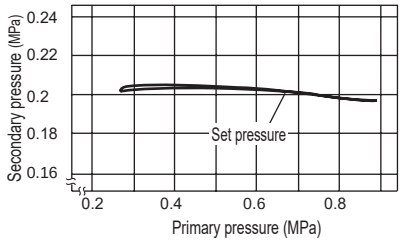

● R2100-W

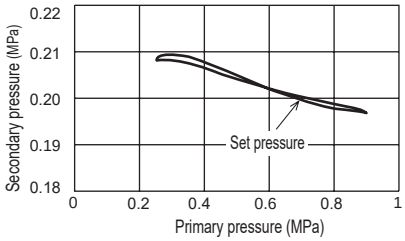

● R3100-W

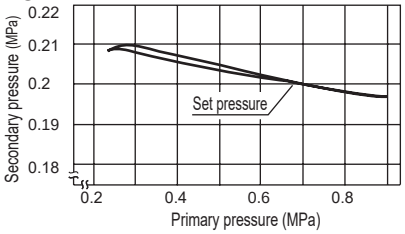

● R4100-W

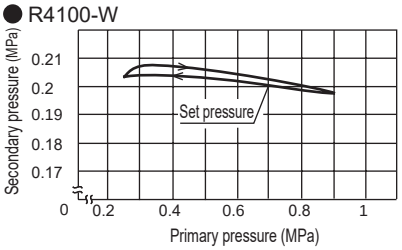

● R6100-W

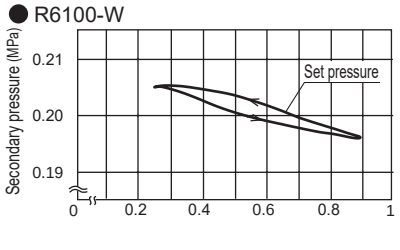

● R8100-W

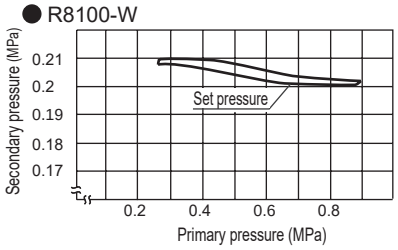

Internal structure and parts list

● R1100-W

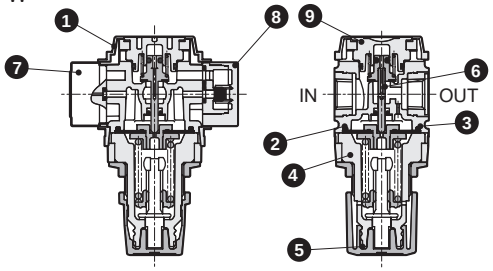

● R2100-W

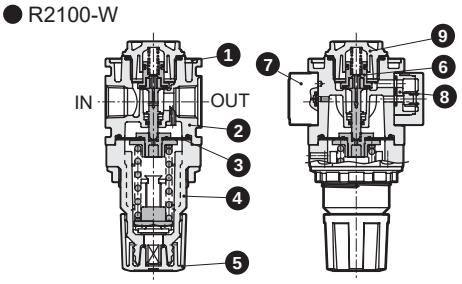

● R3100-W/R4100-W

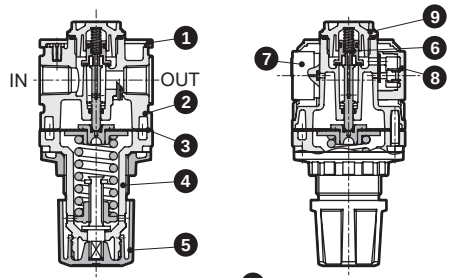

● R6100-W

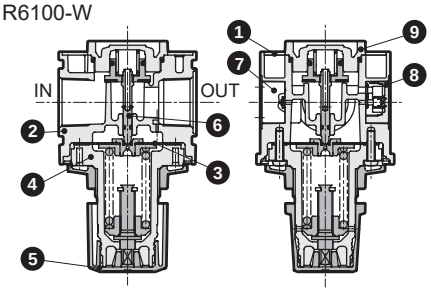

● R8100-W

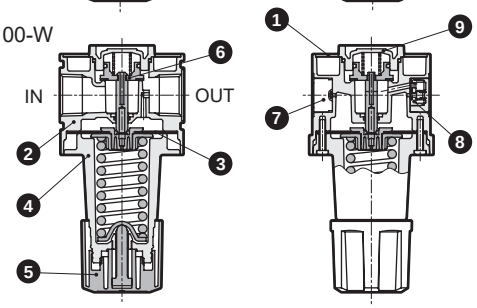

No.	Part name	Material					
		R1100-W	R2100-W	R3100-W	R4100-W	R6100-W	R8100-W
1	Plate cover	ABS resin					
2	Body	PA resin, steel	Aluminum alloy die-casting				
3	Diaphragm assembly	Polyacetal resin nitrile rubber	Zinc alloy die-casting, nitrile rubber *2				
4	Cover	Polyamide resin	PBT resin				Alum die-cast
5	Knob	Polyacetal resin					
6	Valve assembly	Copper alloy, hydrogenated nitrile rubber (polyacetal resin: R2100-W, R3100-W, 4100-W, 8100-W)					
7	Pressure gauge assembly	PBT resin, nitrile rubber, polyacetal resin, polycarbonate resin, copper alloy, copper					
8	Check valve total assembly	PBT resin, nitrile rubber, stainless steel wire, steel					
9	Bottom plug	Polyacetal resin				Aluminum alloy die-casting	

*1: Refer to page 151 for repair parts kits.
*2: Aluminum is added for the R6100-W low-pressure type.

Functions

When the primary pressure is introduced from the IN side, the check valve functions as a regular regulator because it closes with primary pressure and spring load. When primary pressure is released by a switching valve such as a residual pressure exhaust valve, the check valve opens with secondary pressure. Pressure in the diaphragm chamber is released and pressure drops. This causes the diaphragm to be pressed down by the pressure adjustment spring. The main valve (valve assembly) opens, and the air on the OUT side is discharged.

● Circuit diagram

When cylinder head side and rod side pressures differ

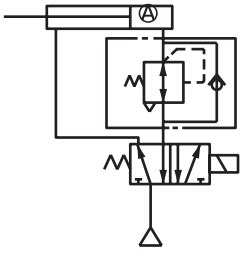

Note: When the primary side pressure is released, back pressure A must be equal to or less than the set pressure range of the regulator corresponding to the back pressure shown in the graph.

Dimensions CAD

● R1100-W

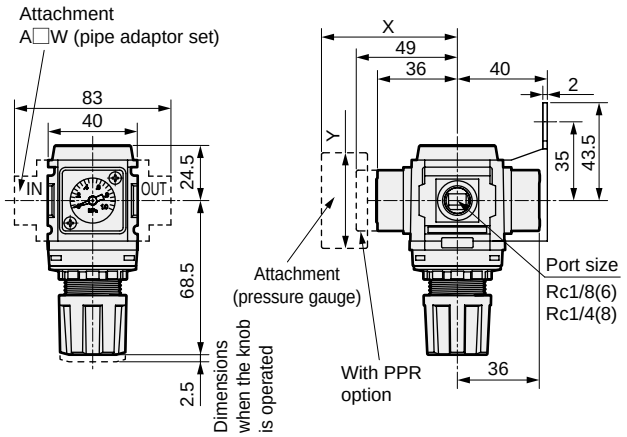

Panel cut dimension

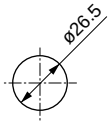

Panel plate thickness: max. 6 mm

· Attachment

C type bracket (-BW)
Part model No.: B120
· Material: Steel
Zinc plated

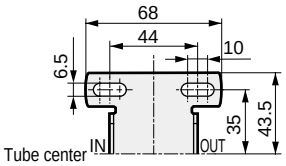

L type bracket (-B3W)
Part model No.: B130
· Material: Steel
Zinc plated

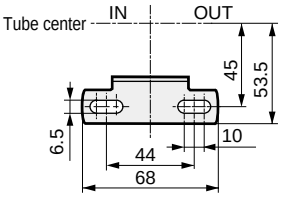

Pressure gauge attached optional dimensions table

Pressure gauge	X	Y
G45P	(74)	ø39
G49P	(73.5)	ø43.5
G59P	(76)	ø52
G40P	(75.5)	ø42.5
G52P	(86)	ø52.5
R2	(74)	□30

● R2100-W

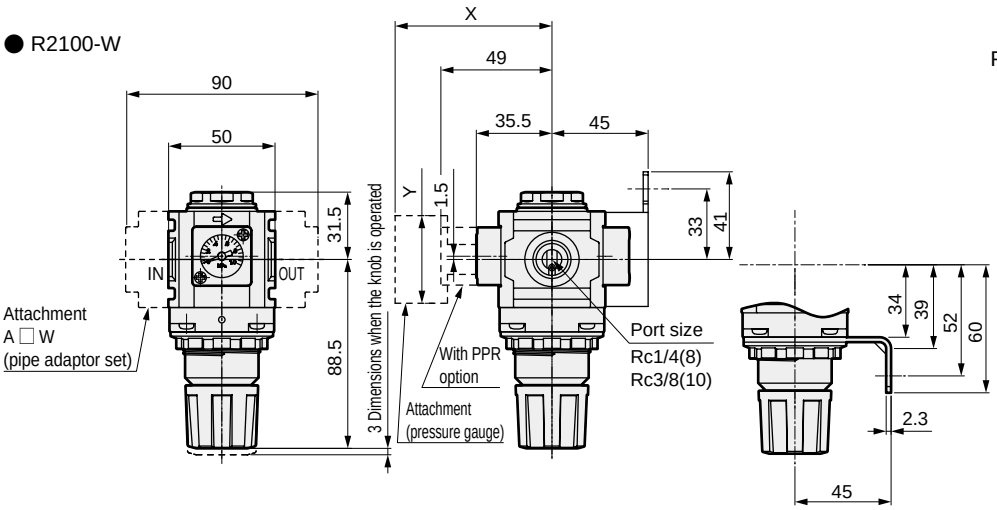

Panel cut dimension

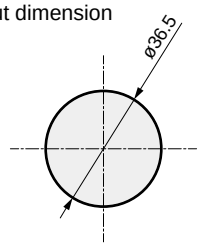

Panel plate thickness: max. 4 mm

Pressure gauge attached optional dimensions table

Pressure gauge	X	Y
G45P	(73.5)	ø39
G49P	(73)	ø43.5
G59P	(75.5)	ø52
G40P	(75)	ø42.5
G52P	(85.5)	ø52.5
R2	(73)	□30

● L type bracket (-B3W)
Part model No.: B230
· Material: Steel
Zinc plated

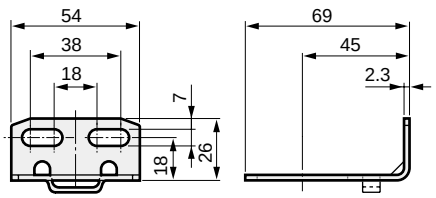

● C type bracket (-BW)
Part model No.: B220
· Material: Steel
Zinc plated

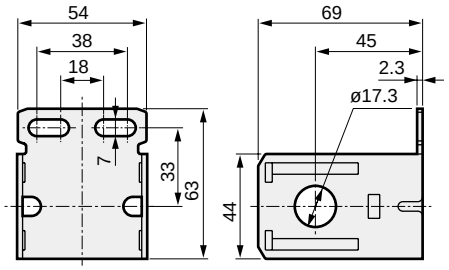

● B type bracket (-B4W)
Part model No.: B240
· Material: Steel
Zinc plated

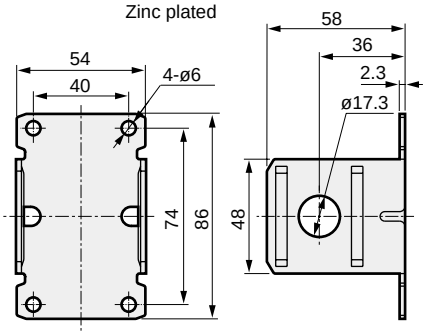

Dimensions CAD

● R3100-W

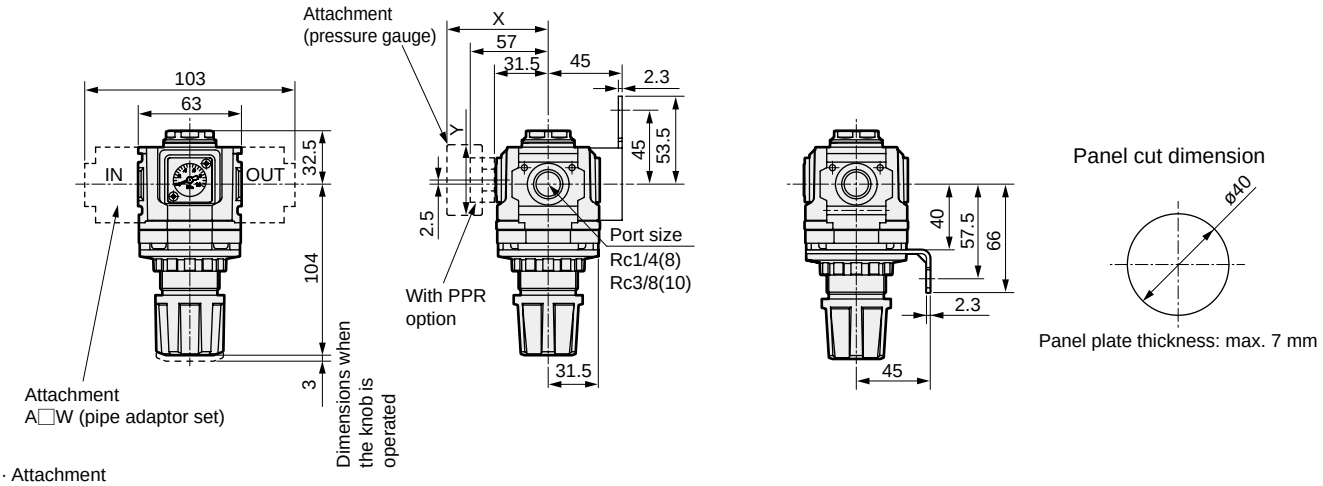

· Attachment
C type bracket (-BW)
Part model No.: B320
· Material: Steel
Zinc plated

L type bracket (-B3W)
Part model No.: B330
· Material: Steel
Zinc plated

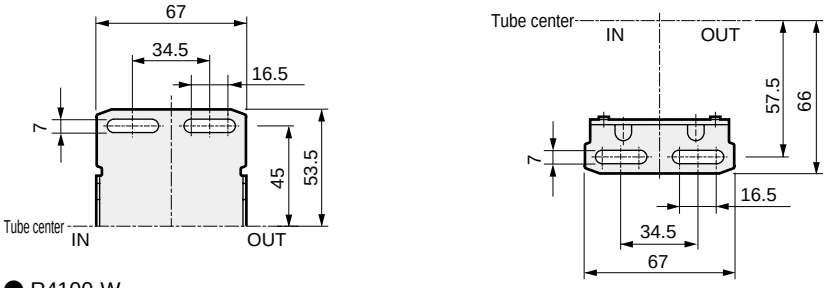

Pressure gauge attached optional dimensions table

Pressure gauge	X	Y
G45P	(70)	ø39
G49P	(69.5)	ø43.5
G59P	(72)	ø52
G40P	(71.5)	ø42.5
G52P	(82)	ø52.5
R2	(69.5)	□30

● R4100-W

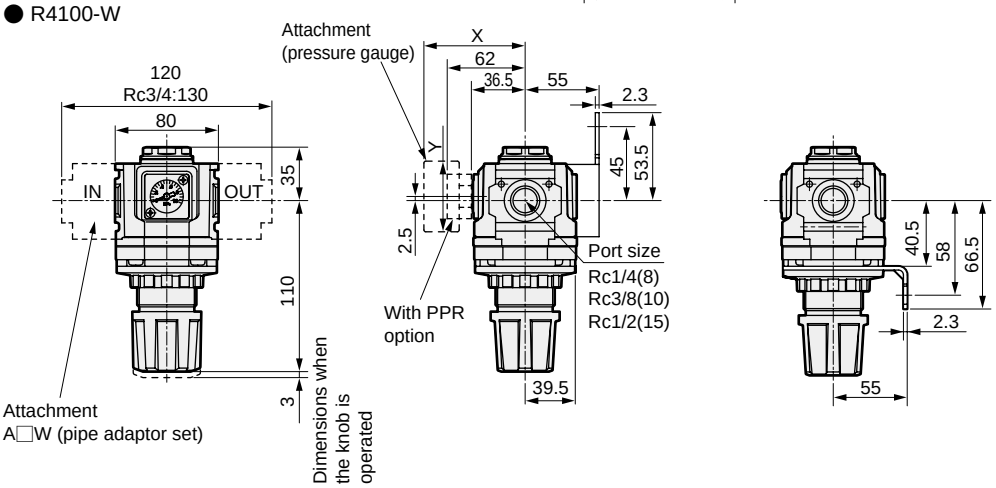

· Attachment
C type bracket (-BW)
Part model No.: B420
· Material: Steel
Zinc plated

L type bracket (-B3W)
Part model No.: B430
· Material: Steel
Zinc plated

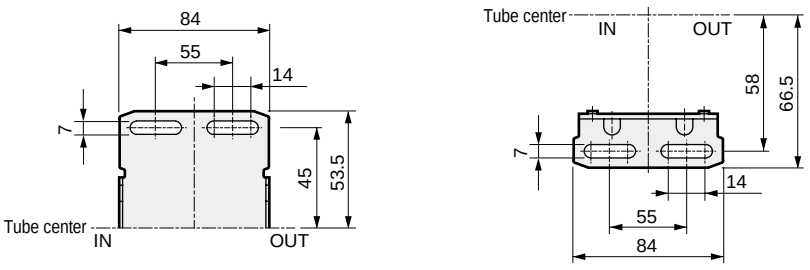

Pressure gauge attached optional dimensions table

Pressure gauge	X	Y
G45P	(75)	ø39
G49P	(74.5)	ø43.5
G59P	(77)	ø52
G40P	(76.5)	ø42.5
G52P	(86)	ø52.5
R2	(75)	□30

Dimensions CAD

● R6100-W

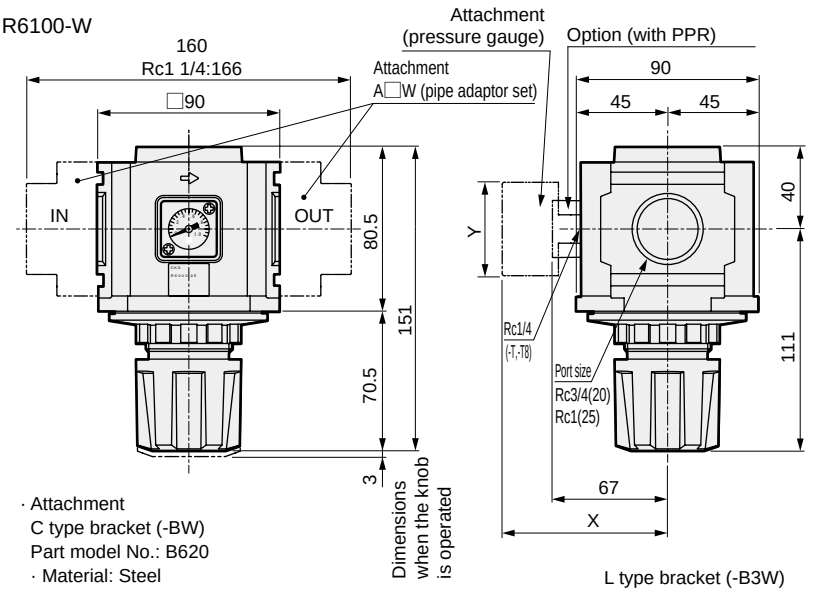

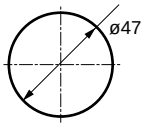

Panel cut dimension

(Panel plate thickness: max. 7 mm)

Pressure gauge optional dimensions table

Pressure gauge	X	Y
G45P	(80)	ø39
G49P	(79.5)	ø43.5
G59P	(82)	ø52
G40P	(81.5)	ø42.5
G52P	(93)	ø52.5
R2	(80)	□30

· Attachment
C type bracket (-BW)
Part model No.: B620
· Material: Steel
Zinc plated

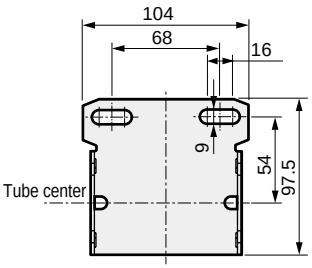

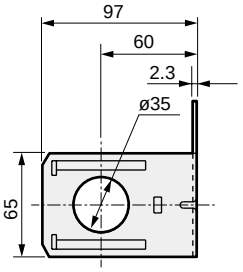

L type bracket (-B3W)
Part model No.: B430
· Material: Steel
Zinc plated

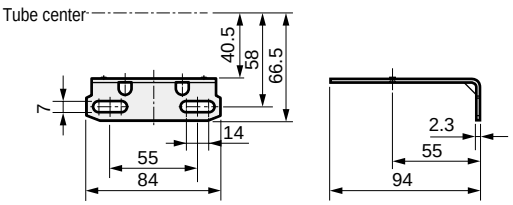

● R8100-W

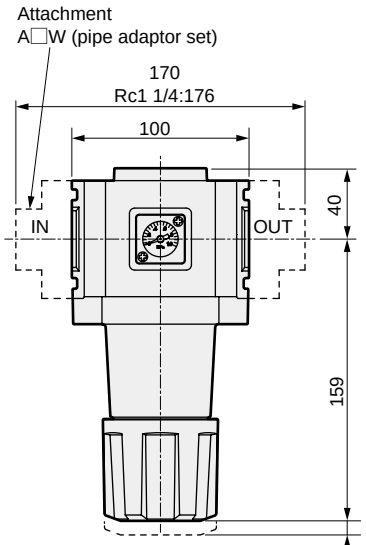

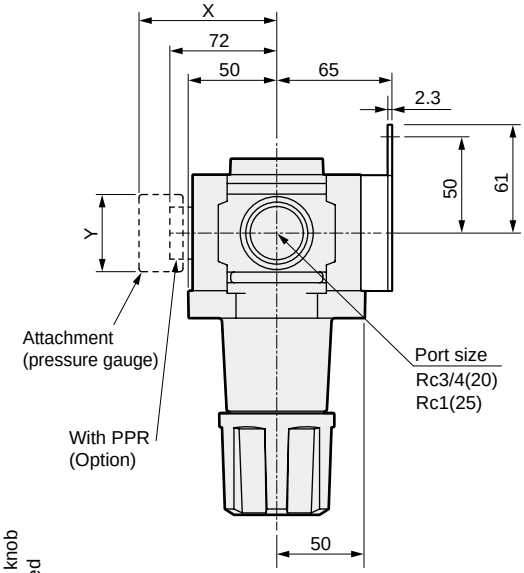

· Attachment
C type bracket (-BW)
Part model No.: B820
· Material: Steel
Zinc plated

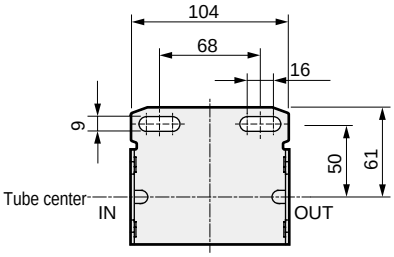

Pressure gauge attached optional dimensions table

Pressure gauge	X	Y
G45P	(85)	ø39
G49P	(84.5)	ø43.5
G59P	(87)	ø52
G40P	(86.5)	ø42.5
G52P	(98)	ø52.5
R2	(85)	□30

Optional parts diagram

Repair parts kit (set of diaphragm assembly, valve assembly, bottom spring, bottom O-ring)

Repair parts kits model No. / Model	Relief diaphragm	Non-relief diaphragm
R1000-W,R1100-W	R1000-KIT	R1000-KIT-N
R2000-W,R2100-W	R2000-W-KIT	R2000-W-KIT-N
R3000-W,R3100-W,RM3000-W	R3000-KIT	R3000-KIT-N
R4000-W,R4100-W,RM4000-W	R4000-KIT	R4000-KIT-N
R6000-W,R6100-W	R6000-KIT R6000-KIT-L (for low pressure range)	R6000-KIT-N R6000-KIT-LN (for low pressure range)
R8000-W,R8100-W	R8000-KIT	R8000-KIT-LN

Valve assembly (set of valve assembly, bottom spring, bottom O-ring)

Model	Valve assembly model No.
R1000-W,R1100-W	R1000-VALVE-ASSY
R2000-W,R2100-W	R2000-W-VALVE-ASSY
R3000-W,R3100-W,RM3000-W	R3000-VALVE-ASSY
R4000-W,R4100-W,RM4000-W	R4000-VALVE-ASSY
R6000-W,R6100-W	R6000-VALVE-ASSY
R8000-W,R8100-W	R8000-VALVE-ASSY

* Refer to page 377 for the gauge plug assembly.

Check valve assembly for reverse regulator

Model	Check valve assembly model No.
R1000-W,R1100-W	R1100-W-CHECK-VALVE-ASSY
R2100-W	R3100-W-CHECK-VALVE-ASSY
R3100-W,RM3000-W,W3100-W R4100-W,RM4000-W,W4100-W R6100-W,R8100-W W8100-W	R3100-W-CHECK-VALVE-ASSY

Adjusting spring

Adjusting spring model No. / Model	Standard spring (0.05 to 0.85MPa)	Low pressure spring (0.05 to 0.35 MPa)
R1000-W,R1100-W W1000-W,W1100-W	R1000-SPRING	R1000-SPRING-L
R2000-W,R2100-W	R2000-W-SPRING	R2000-W-SPRING-L
R3000-W,R3100-W,RM3000-W W3000-W,W3100-W	R3000-SPRING	R3000-SPRING-L
R4000-W,R4100-W,RM4000-W W4000-W,W4100-W	R4000-SPRING	R4000-SPRING-L
R8000-W,R8100-W	R8000-SPRING	R8000-SPRING-L
W8000-W,W8100-W	W8000-SPRING	W8000-SPRING-L

Diaphragm assembly (only diaphragm assembly)

Diaphragm assembly model No. / Model	Relief diaphragm	Non-relief diaphragm
R1000-W,R1100-W W1000-W,W1100-W	R1000-DIAPHRAGM-ASSY	R1000-DIAPHRAGM-ASSY-N
R2000-W,R2100-W	R2000-DIAPHRAGM-ASSY	R2000-DIAPHRAGM-ASSY-N
R3000-W,R3100-W,RM3000-W W3000-W,W3100-W	R3000-DIAPHRAGM-ASSY	R3000-DIAPHRAGM-ASSY-N
R4000-W,R4100-W,RM4000-W W4000-W,W4100-W	R4000-DIAPHRAGM-ASSY	R4000-DIAPHRAGM-ASSY-N
R6000-W,R6100-W	R6000-DIAPHRAGM-ASSY R6000-DIAPHRAGM-ASSY-L (for low pressure range)	R6000-DIAPHRAGM-ASSY-N R6000-DIAPHRAGM-ASSY-LN (for low pressure range)
R8000-W,R8100-W	R8000-DIAPHRAGM-ASSY	R8000-DIAPHRAGM-ASSY-N
W8000-W,W8100-W	W8000-DIAPHRAGM-ASSY	W8000-DIAPHRAGM-ASSY-N

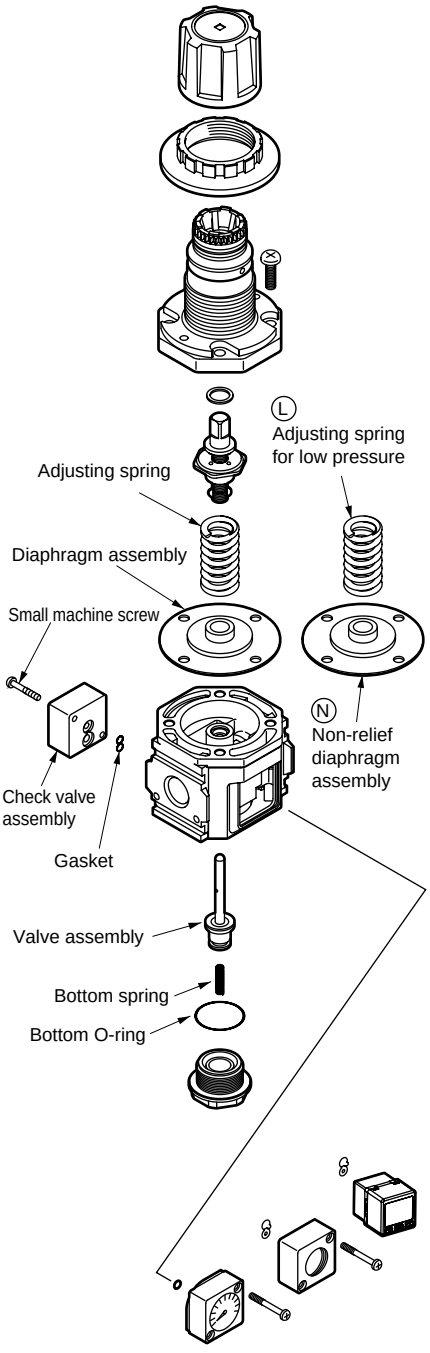



Lubricator Standard White Series

L1000/L3000/L4000/L8000-W Series

Supplies fine oil mist.

● Port size: 1/8 to 1

JIS symbol 

RoHS CAD

Specifications

Item	L1000-W	L3000-W	L4000-W	L8000-W
Appearance				
Working fluid	Compressed air			
Max. working pressure MPa	1.0 (≈150 psi, 10 bar)			
Proof pressure MPa	1.5 (≈220 psi, 15 bar)			
Ambient / fluid temperatures °C	5 (41°F) to 60 (140°F)			
Min. drip flow rate *1 m^3/min(ANR)	0.015	0.03	0.065	0.065
Oil storage capacity cm^3	20	85	170	170(MAX360)
Oil used	Turbine oil Class 1 ISO VG32 (spindle oil cannot be used)			
Port size Rc,NPT,G	1/8, 1/4 (3/8 uses an adaptor)	1/4, 3/8 (1/2 uses an adaptor)	1/4, 3/8, 1/2 (3/4 uses an adaptor)	3/4, 1 (1 1/4 uses an adaptor)
Weight kg	0.1	0.28	0.45	1.4
Standard accessories	Bowl guard			

*1: The min. drip flow is that at which five drops of turbine oil drip per minute at the primary pressure of 0.5 MPa and inlet air temperature of 20°C. (It cannot be used for dry fog.)

Float switch electric specification

Item	
Number of control points	1 points
Actuation	Switch turns OFF when float rises (oil level detected), and turns ON when float lowers (no oil level detected)
Max. working voltage	240 VAC, 200 VDC
Max. open and close capacity	50 VA or 50 W, whichever is smaller
Max. open and close current	0.5 A
Resistance voltage between contacts	400 VDC for one minute and leak current 1 mA or less
Contact resistance	220 mΩ or less (between terminal sections)
Insulation resistance	100 MΩ and over (between terminal section and case, 500 VDC megger)
Withstand voltage	1500 VAC for one minute (between terminal section and case)
Electrical life	10^6 times (at 200 VAC, 200 mA, depending on resistance load)

Option weight

* Add to the weight of the standard accessories.

Unit: kg

Code	Drain discharge		Bowl material		Pipe adaptor set							Bracket
	C	LL	M	M1	A6*W	A8*W	A10*W	A15*W	A20*W	A25*W	A32*W	BW
L1000	0				0.09	0.09	0.09					0.1
L3000	0	0.05	0.1	0.1		0.16	0.16	0.16				0.17
L4000	0	0.05	0.1	0.1		0.16	0.16	0.16	0.16			0.21
L8000	0	0.05	0.1	0.1					0.53	0.53	0.53	0.36

How to order

L1000 - 6 ◯ - W - C - ◯ - A6W ◯

* Refer to page 30 for the explanation of the option.

Ⓐ Model No.
Ⓑ Port size
Ⓒ Port thread
Ⓓ Option
Ⓔ Display unit
Ⓕ Pipe adaptor set (included)
Ⓖ Bracket (included)

Code		Description	Ⓐ Model No. L1000	L3000	L4000	L8000
Ⓑ Port size						
6		1/8	●			
8		1/4	●	●	●	
10		3/8		●	●	
15		1/2			●	
20		3/4				●
25		1				●
Ⓒ Port thread						*1
Blank		Rc thread	●	●	●	●
N		NPT thread	●	●	●	●
G		G thread	●	●	●	●
Ⓓ Option						*2
Drain discharge	**Blank**	Without manual cock	●	●	●	●
	C	With manual cock	●	●	●	●
	LL	With float switch		●	●	●
Bowl material *3	**Blank**	Polycarbonate bowl	●	●	●	●
	Z	Nylon bowl	●	●	●	●
	M	Metal bowl		●	●	●
	M1	Metal bowl with manual drain cock *4		●	●	●
Flow direction	**Blank**	Standard flow (left → right)	●	●	●	●
	X1	Reverse flow (right → left)	●	●	●	●
Ⓔ Display unit						
Blank		MPa display (Rc thread), psi display (NPT thread), bar display (G thread)	●	●	●	●
J1		MPa display (NPT, G thread)	●	●	●	●
Ⓕ Pipe adaptor set (included)						*5, *6 Page 350
Blank		Not included	●	●	●	●
A6*W		1/8 pipe adaptor set	●			
A8*W		1/4 pipe adaptor set	●	●	●	
A10*W		3/8 pipe adaptor set	●	●	●	
A15*W		1/2 pipe adaptor set		●	●	
A20*W		3/4 pipe adaptor set			●	●
A25*W		1 pipe adaptor set				●
A32*W		1 1/4 pipe adaptor set				●
*** Adaptor thread**						
Blank		RC thread	●	●	●	●
N		NPT thread	●	●	●	●
G		G thread	●	●	●	●
Ⓖ Bracket (included)						
Blank		Not included	●	●	●	●
BW		C type bracket	●	●	●	●

Precautions for model No. selection

*1: G and NPT threads are available for IN and OUT.
*2: When selecting options for several items, list options in order from the top.
*3: The adjusting dome material will change to nylon resin when the nylon bowl or metal bowl is selected.
*4: When selecting option "M1", select the drain discharge option "C".
*5: The pipe adaptor set and C type bracket cannot be used together.
*6: The joiner set is enclosed with the pipe adaptor set.

Drainage and bowl material combination (Item Ⓓ in How to order)

Option D With float switch

	3000/4000/8000 Series	
Shape	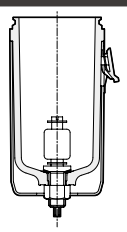	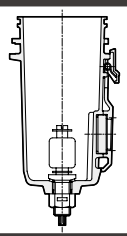
Material	**Plastic bowl**	**Metal bowl**
	Polycarbonate / **Nylon**	**Aluminum**
Lubricator L*000-W	LL / LLZ	LLM

Flow characteristics

● L1000-6-W

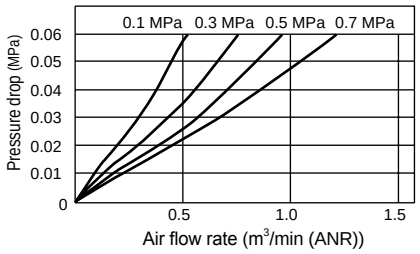

● L1000-8-W

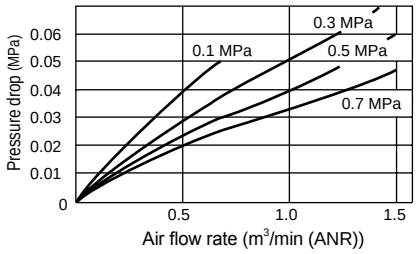

● L3000-8-W

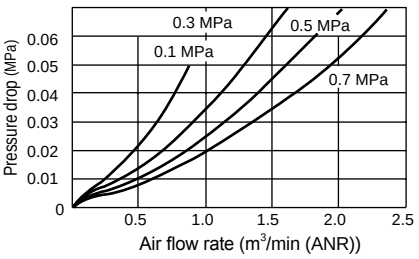

● L3000-10-W

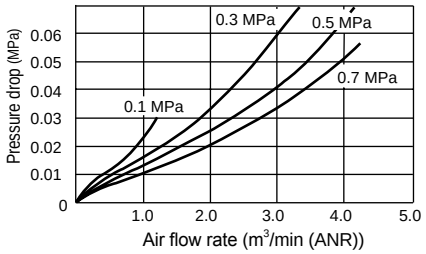

● L4000-8-W

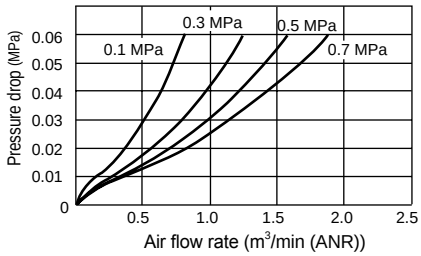

● L4000-10-W

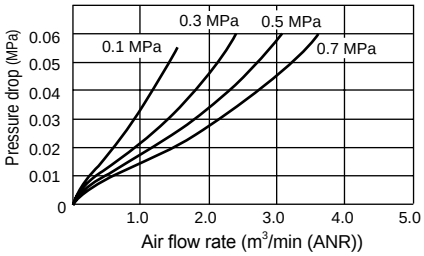

● L4000-15-W

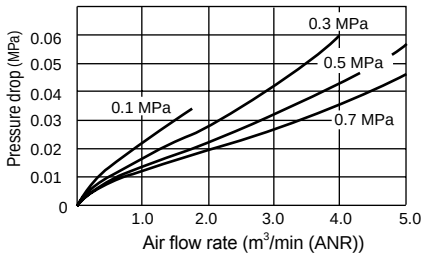

● L8000-20-W

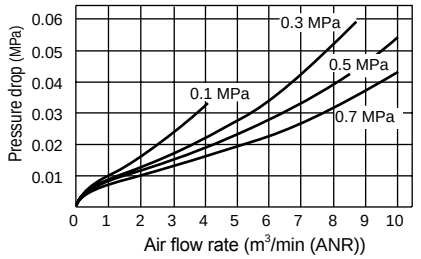

● L8000-25-W

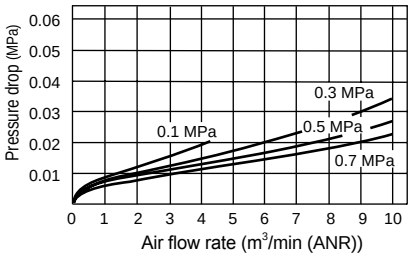

Oil drip rate

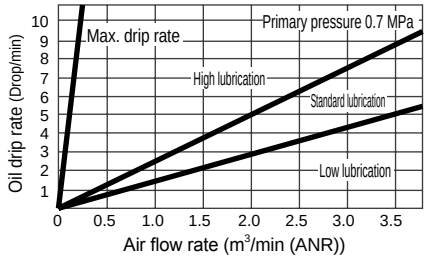

Internal structure and parts list

● L1000-W

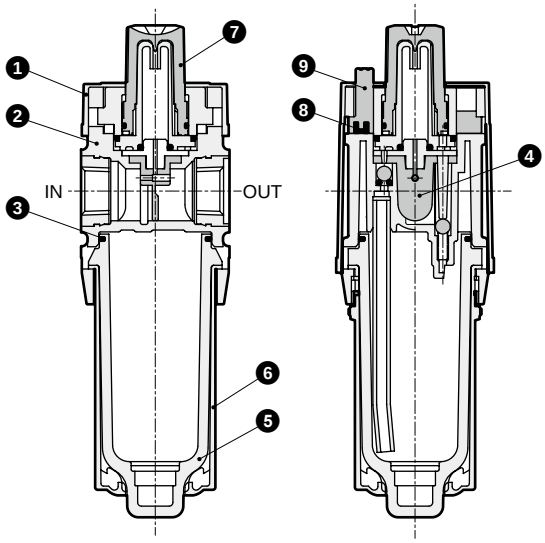

● L3000-W/L4000-W

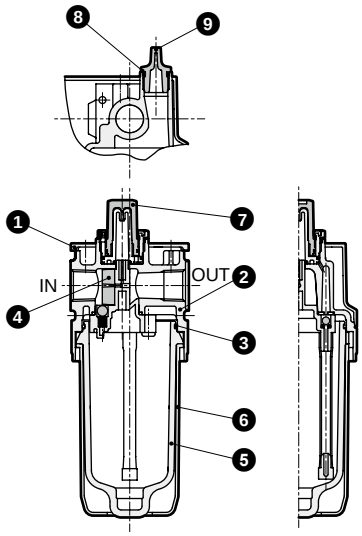

● L8000-W

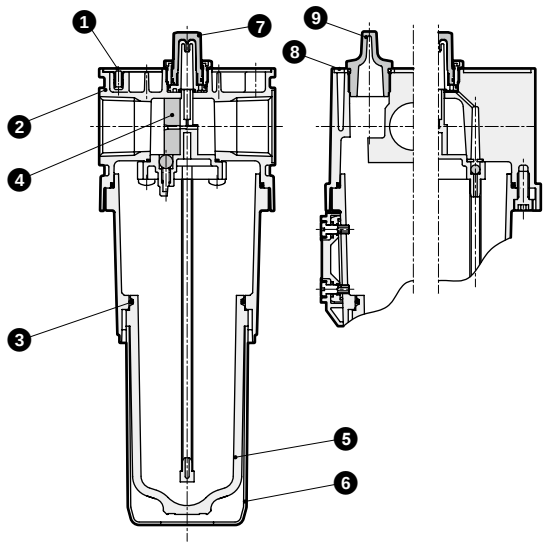

● Option float switch

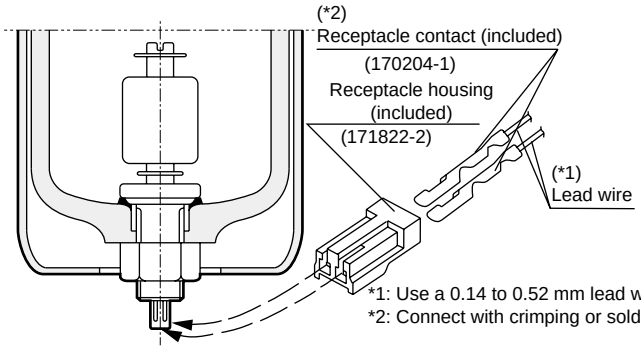

*1: Use a 0.14 to 0.52 mm lead wire.
*2: Connect with crimping or soldering.

A TE Connectivity Ltd. post header (part No. 171825-2) is used for the terminal.
Use an 171822-2 (standard) or 172142-2 (rope file) for the connector.

Note: The degree of protection of terminal sections is equivalent to IP40. Protect the product appropriately if it is exposed to water, salt, dust, and cutting chips. Contact CKD if the degree of protection is required.

No.	Part name	Material			
		L1000-W	L3000-W	L4000-W	L8000-W
1	Plate cover	ABS resin			
2	Body	Polyamide resin, steel	Aluminum alloy die-casting		
3	O-ring *1	Special nitrile rubber			
4	Flow guide	Urethane rubber resin		Nitrile rubber	
5	Bowl	Polycarbonate resin			
6	Bowl guard	Polyamide resin	Polyamide resin, steel		
7	Adjusting dome	Polycarbonate resin			
8	O-ring	Nitrile rubber			
9	Filling plug	Polyacetal resin			

*1: The O-ring of the L1000-W has a special shape.

Dimensions CAD

● L1000-W

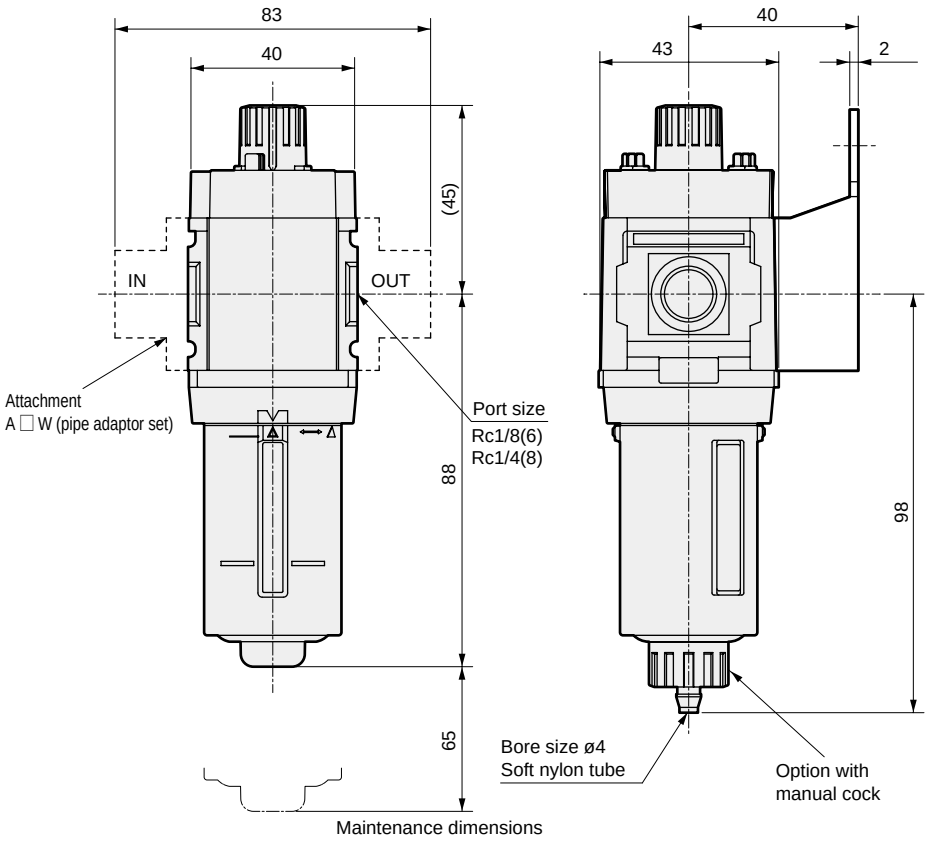

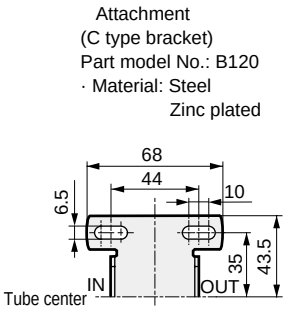

Note: The C type bracket and pipe adaptor set attachments cannot be used together.

● L3000-W

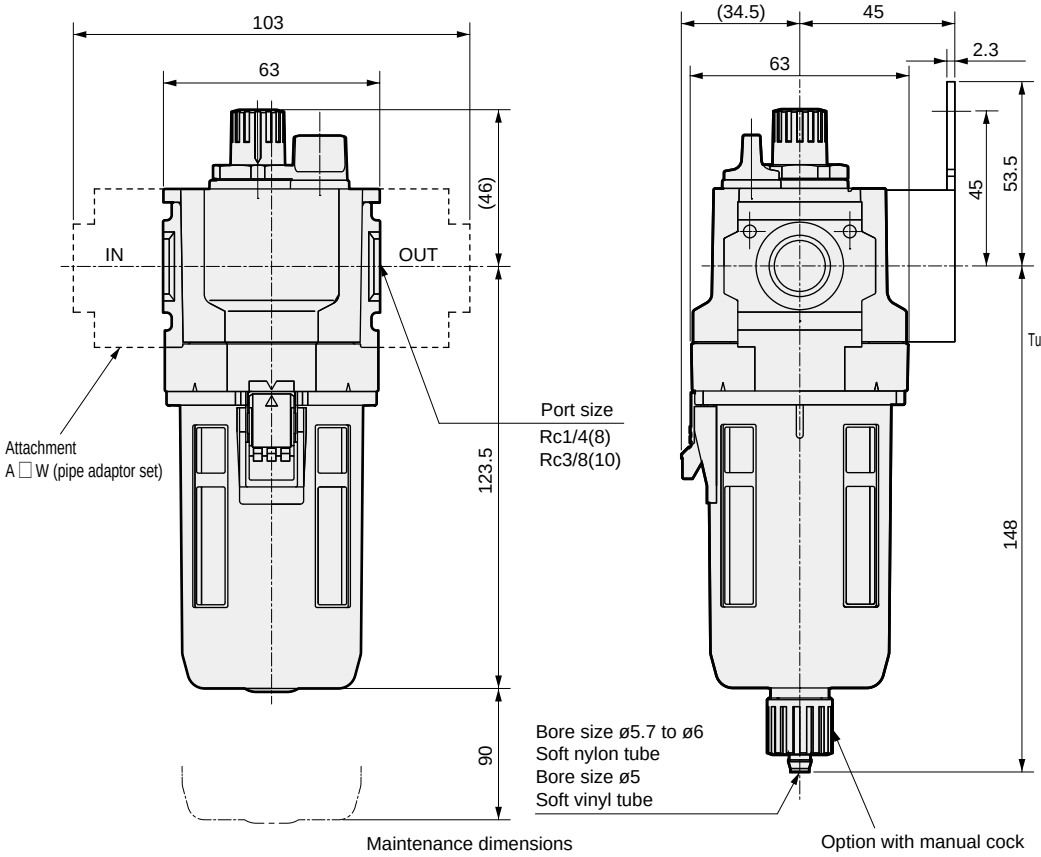

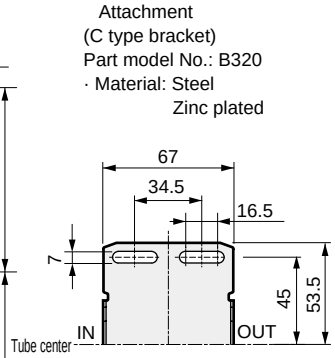

Note: The C type bracket and pipe adaptor set attachments cannot be used together.

Dimensions

● L4000-W

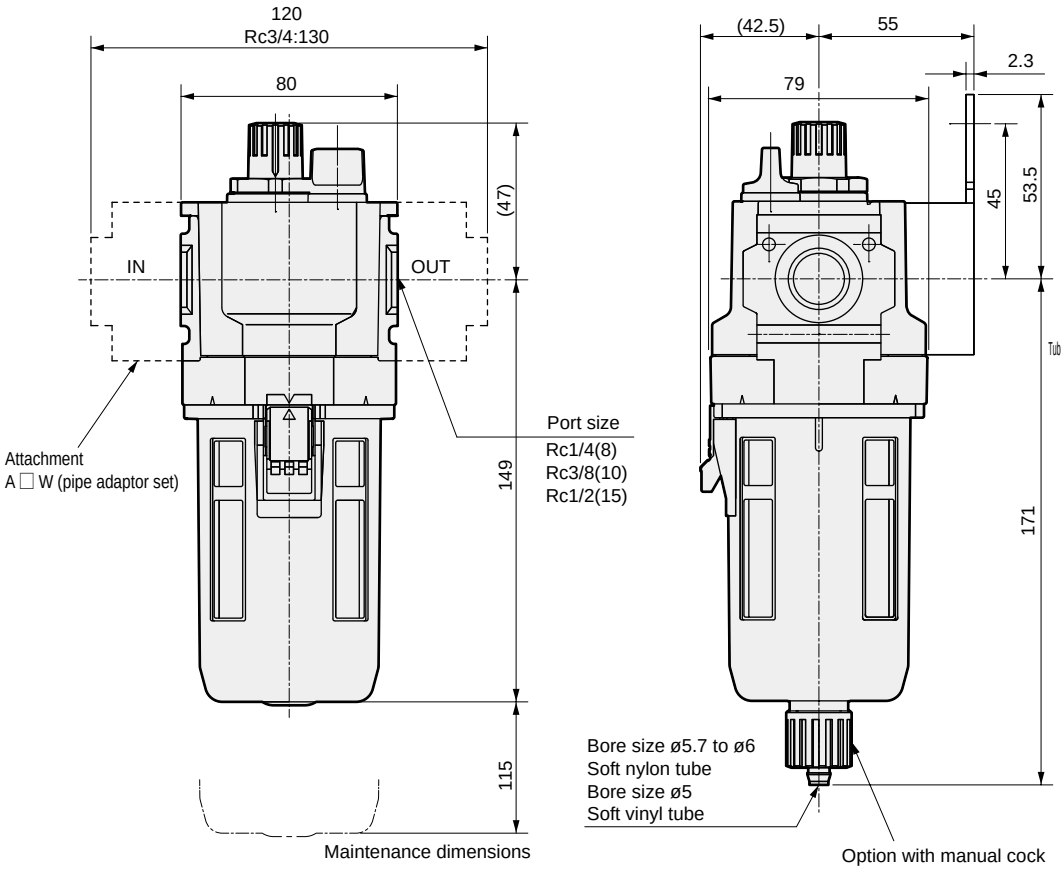

Note: The C type bracket and pipe adaptor set attachments cannot be used together.

● L8000-W

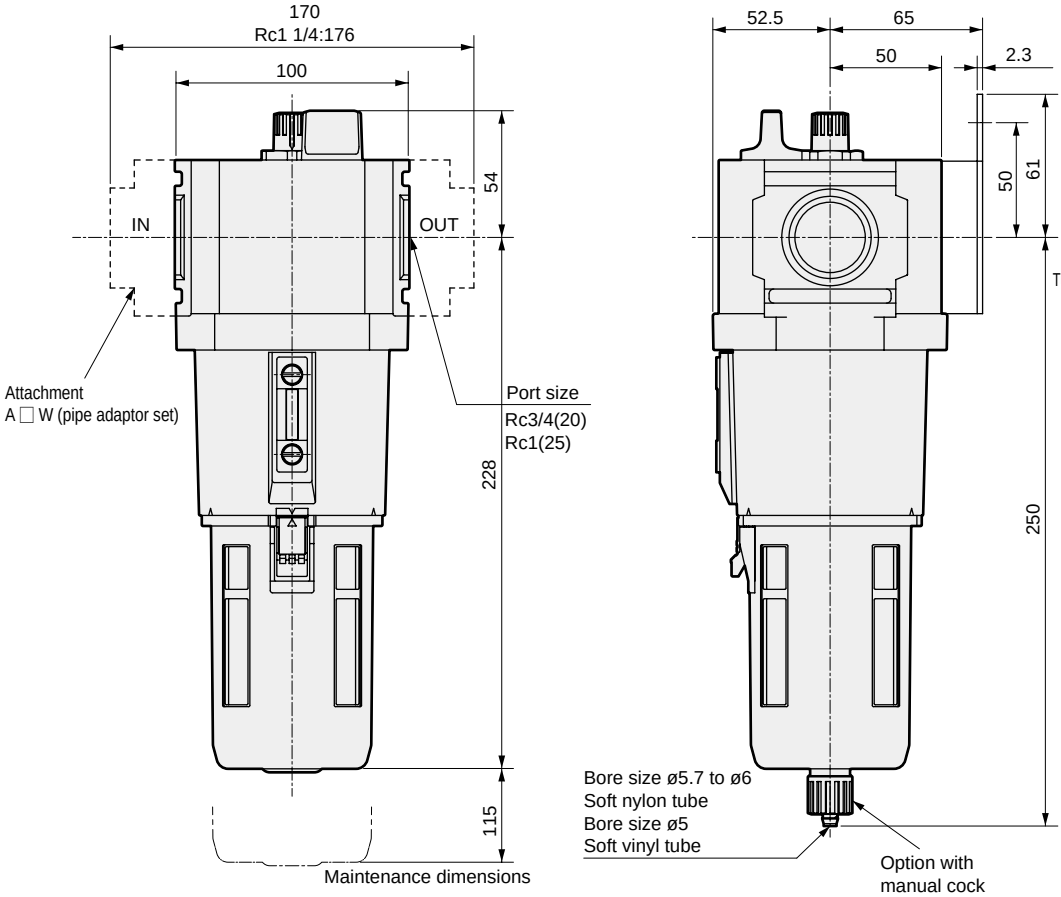

Optional dimensions

Other options [L3000-W, 4000-W, 8000-W]

● Plastic bowl (LL)
With float switch

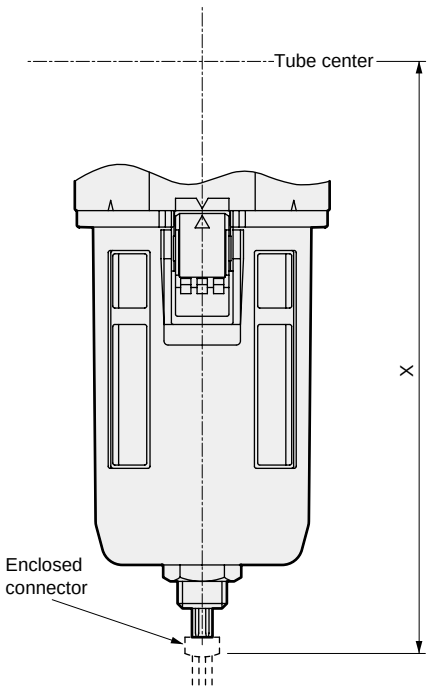

● Metal bowl without manual drain cock (M)

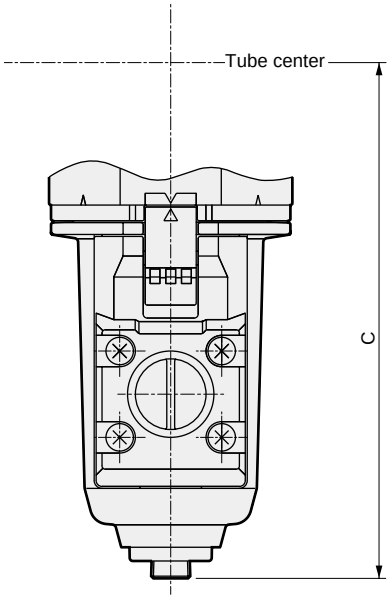

● Manual cock (CM)

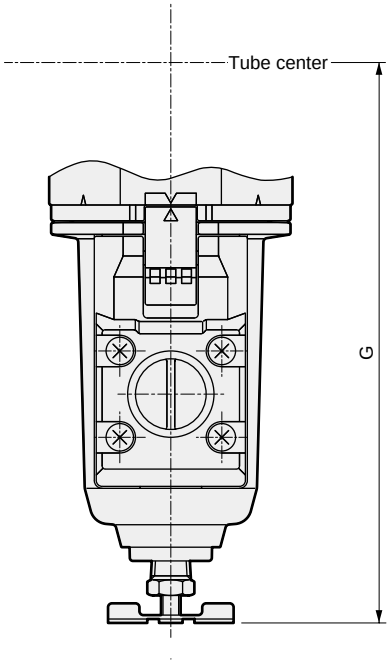

● Manual resin cock (CM1)

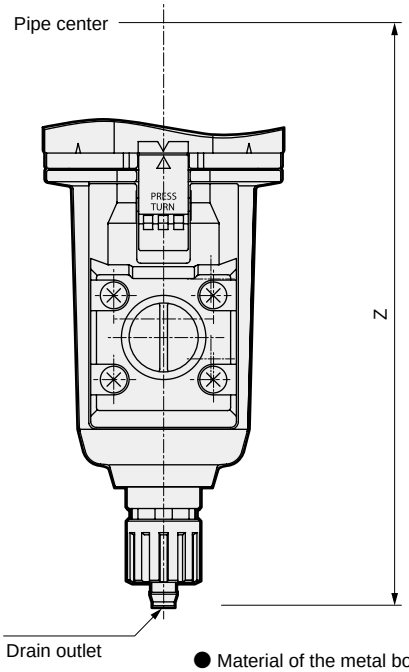

● Metal bowl with float switch (LLM)

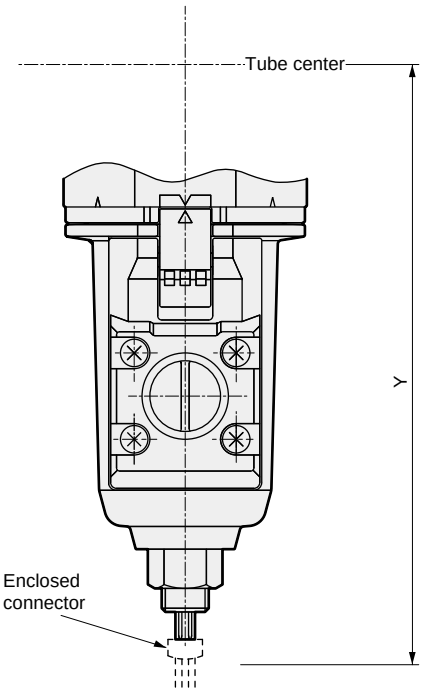

● Material of the metal bowl is aluminum die-casting.

Model No.	C	G	X	Y	Z
L3000-W	129	143.5	147	153.5	154
L4000-W	152	166.5	170	177	177
L8000-W	231.5	245.5	249	256	256

Optional dimensions

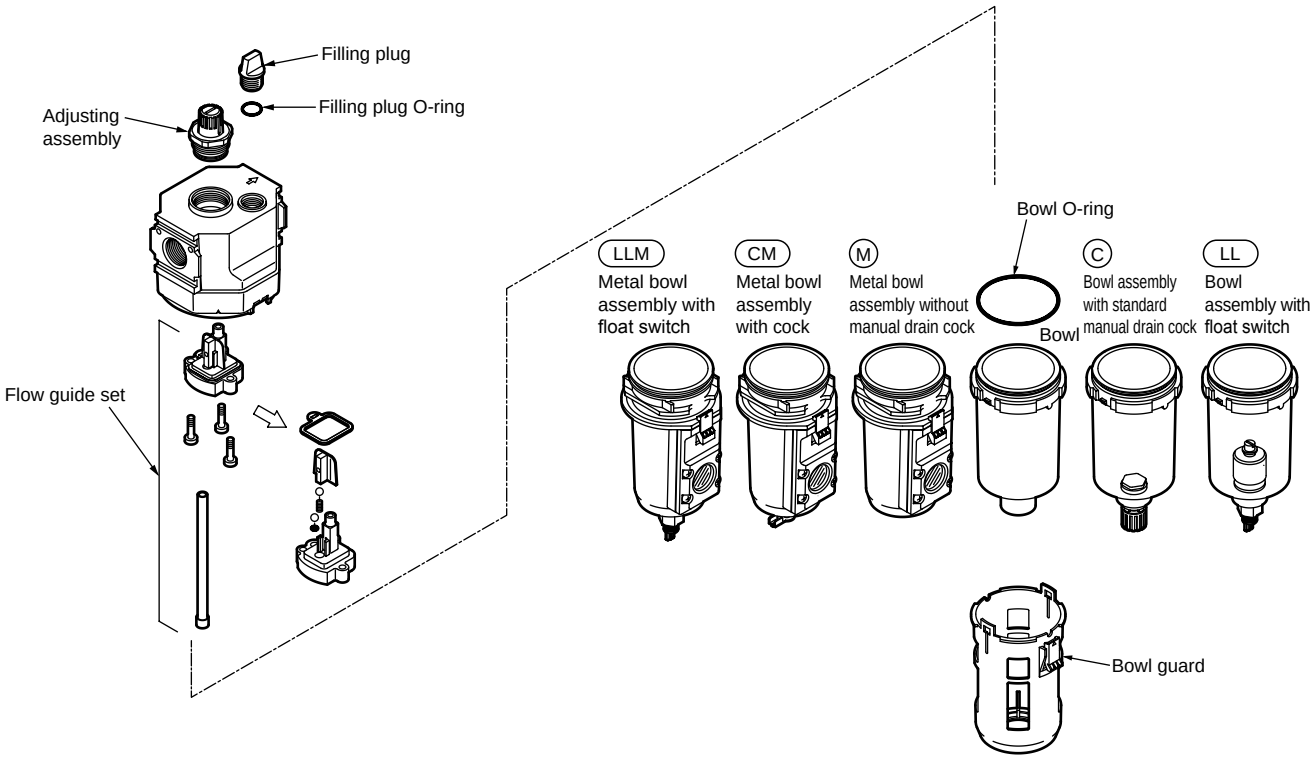

Repair parts kit (set of filling plug O-ring, adjusting assembly, flow guide set, bowl O-ring)

Model No.	Repair parts kits model No. (for polycarbonate bowl)	Repair parts kits model No. (for nylon bowl, metal bowl)
L3000-W	L3000-W-KIT	L3000-W-KIT-Z
L4000-W	L4000-W-KIT	L4000-W-KIT-Z
L8000-W	L8000-W-KIT	L8000-W-KIT-Z

Bowl assembly (set of bowl assembly and bowl O-ring)

Bowl assy model No. / Model No.	Polycarbonate bowl without manual drain cock (blank)	Nylon bowl without manual drain cock (Z)	Metal bowl without manual drain cock (M)	Polycarbonate bowl with standard manual drain cock (C)	Nylon bowl with standard manual drain cock (CZ)	Metal bowl with cock (CM)	Polycarbonate bowl with float switch (LL)	Nylon bowl with float switch (LLZ)	Metal bowl with float switch (LLM)
L1000-W	L1000-BOWL	L1000-BOWL-Z	-	F1000-W-BOWL	F1000-W-BOWL-Z	-	-	-	-
L3000-W	L3000-BOWL	L3000-BOWL-Z	L3000-W-BOWL-M	F3000-W-BOWL	F3000-W-BOWL-Z	F3000-W-BOWL-M	L3000-BOWL-LL	L3000-BOWL-LLZ	L3000-W-BOWL-LLM
L4000-W,L8000-W	L4000-BOWL	L4000-BOWL-Z	L4000-W-BOWL-M	F4000-W-BOWL	F4000-W-BOWL-Z	F4000-W-BOWL-M	L4000-BOWL-LL	L4000-BOWL-LLZ	L4000-W-BOWL-LLM

* Refer to the air filter options and parts table for details on the bowl guard.

Adjusting assembly

Model No.	Adjusting assembly model No. (for polycarbonate bowl)	Adjusting assembly model No. (for nylon bowl, metal bowl)
L3000-W,L4000-W,L8000-W	L3000-W-AJ-KIT	L3000-W-AJ-KIT-Z

Flow guide set

Model No.	Flow guide set model No.
L3000-W	L3000-FLOW-GUIDE
L4000-W	L4000-FLOW-GUIDE
L8000-W	L8000-FLOW-GUIDE

Filling plug set (set of filling plug, filling plug O-ring)

Model No.	Filling plug set model No.
L3000-W,L4000-W	L3000-W-PLUG
L8000-W	L8000-W-PLUG



Drain separator

FX Series

Lightweight compact drain separator Applicable compressors 0.75 kW to 37 kW

● Port size: 1/4 to 1

JIS symbol



RoHS CAD

Specifications

1 MPa ≈ 145.0 psi, 1 MPa = 10 bar

Item		FX1004	FX1011	FX1037
Working fluid		Compressed air		
Working pressure	MPa	0.1 (≈15 psi, 1 bar) to 1.0 (≈145 psi, 10 bar) *3		
Proof pressure	MPa	1.5 (≈217 psi, 15 bar)		
Ambient/fluid temperatures	°C	5 (41°F) to 60 (140°F)		
Water separation efficiency	%	99 *2		
Max. processing flow rate *1	L/min (ANR)	550	1800	6100
Port size	Rc, NPT, G	1/4, 3/8	1/4, 3/8, 1/2	3/4, 1
Product weight	kg	0.3	0.5	1.2

*1: At inlet pressure 0.7 MPa.
*2: Water separation efficiency during max. processing flow rate. (Evaporated water droplets (water vapor) cannot be separated)
*3: In the case of "F1" with auto-drain, the min. working pressure of auto-drain is 0.15 MPa.

Option weight

* Add to the weight of the standard accessories.

Unit: kg

Code	Drain discharge			Bowl material
	C	F	F1	M
FX1004	0	0.02	0.02	0.1
FX1011	0	0.02	0.02	0.1
FX1037	0	0.02	0.02	0.1

How to order

FX1004 - 8 ( ) - W - F - BW

- Ⓐ Model No.
- Ⓑ Port size
- Ⓒ Port thread
- Ⓓ Option
- Ⓔ Attachment

Code		Description	Ⓐ Model No. FX1004	FX1011	FX1037
Ⓑ Port size					
8		1/4	●	●	
10		3/8	●	●	
15		1/2		●	
20		3/4			●
25		1			●
Ⓒ Port thread					
Blank		Rc thread	●	●	●
N		NPT thread	●	●	●
G		G thread	●	●	●
Ⓓ Option *1, 2					
Drain discharge	**Blank**	With manual drain cock (1/8 internal thread only for metal bowl)	●	●	●
	C	With manual cock (can only be selected for metal bowl)	●	●	●
	F	Auto-drain with manual override (NO: Exhaust when not pressurized)	●	●	●
	F1	Auto-drain with manual override (NC: No exhaust when not pressurized)	●	●	●
Bowl material	**Blank**	Polycarbonate bowl	●	●	●
	Z	Nylon bowl	●	●	●
	M	Metal bowl	●	●	●
	M1	Metal bowl with manual drain cock	●	●	●
Flow direction	**Blank**	Standard flow (left → right)	●	●	●
	X1	Reverse flow (right → left)	●	●	●
Ⓔ Attachment *3, *4					
Blank		Not included	●	●	●
A8*W		1/4 pipe adaptor set	●	●	
A10*W		3/8 pipe adaptor set	●	●	
A15*W		1/2 pipe adaptor set	●	●	
A20*W		3/4 pipe adaptor set		●	●
A25*W		1 pipe adaptor set			●
A32*W		1 1/4 pipe adaptor set			●
BW		C-bracket	●	●	●
*** Adaptor thread**					
Blank		Rc thread	●	●	●
N		NPT thread	●	●	●
G		G thread	●	●	●

⚠ Precautions for model No. selection

*1: Select options for the drainage, bowl material, and flow direction.
When selecting options for several items, list options in order from the top.

***2: Refer to page 354 for the auto-drain usage conditions.**

*3: The pipe adaptor set and C type bracket cannot be used together.

*4: The joiner set is included with the pipe adaptor set.

Replacement parts list

Bowl guard

Bowl guard model No. / Model	For polycarbonate bowl	For nylon bowl
FX1004	F3000-W-BOWL-GUARD	F3000-W-BOWL-GUARD-Z
FX1011, FX1037	F4000-W-BOWL-GUARD	F4000-W-BOWL-GUARD-Z

Bowl assembly (set of bowl assembly and bowl O-ring)

Bowl assembly model No. / Model	PC bowl assembly with manual cock	PA bowl assembly with manual cock	Metal bowl assembly with manual cock	Metal bowl assembly with Rc1/8 female thread	Metal bowl assembly with manual cock
FX1004	F3000-W-BOWL	F3000-W-BOWL-Z	F3000-W-BOWL-M	FX1004-W-BOWL-M	F3000-W-BOWL-M1
FX1011, FX1037	F4000-W-BOWL	F4000-W-BOWL-Z	F4000-W-BOWL-M	FX1011-W-BOWL-M	F4000-W-BOWL-M1

Bowl assembly model No. / Model	PC bowl assembly with NO auto-drain	PA bowl assembly with NO auto-drain	Metal bowl assembly with NO auto-drain	Metal bowl assembly with NO auto-drain
FX1004	F3000-W-BOWL-F	F3000-W-BOWL-FZ	F3000-W-BOWL-FM	F3000-W-BOWL-FM1
FX1011	F4000-W-BOWL-F	F4000-W-BOWL-FZ	F4000-W-BOWL-FM	F4000-W-BOWL-FM1
FX1037	F8000-W-BOWL-FF	F8000-W-BOWL-FFZ	F8000-W-BOWL-FFM	F8000-W-BOWL-FFM1

Bowl assembly model No. / Model	PC bowl assembly with NC auto-drain	PA bowl assembly with NC auto-drain	Metal bowl assembly with NC auto-drain	Metal bowl assembly with NC auto-drain
FX1004	M3000-W-BOWL-F1	M3000-W-BOWL-F1Z	M3000-W-BOWL-F1M	M3000-W-BOWL-F1M1
FX1011	M4000-W-BOWL-F1	M4000-W-BOWL-F1Z	M4000-W-BOWL-F1M	M4000-W-BOWL-F1M1
FX1037	F8000-W-BOWL-FF1	F8000-W-BOWL-FF1Z	F8000-W-BOWL-FF1M	F8000-W-BOWL-FF1M1

Flow characteristics

● FX1004-8-W

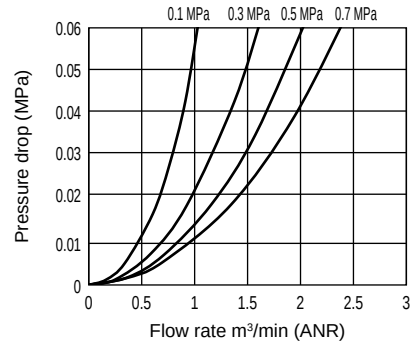

● FX1004-10-W

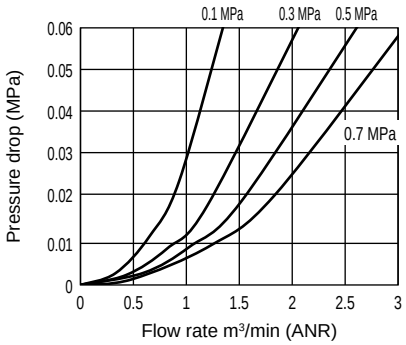

● FX1011-8-W

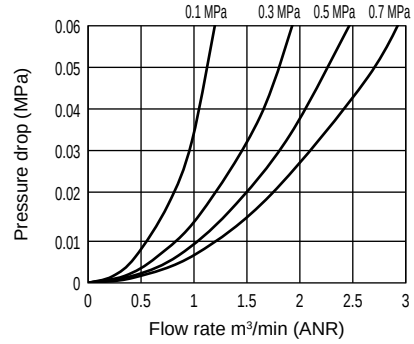

● FX1011-10-W

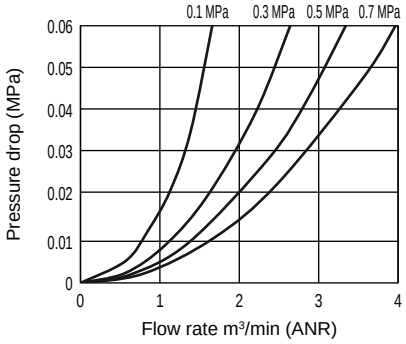

● FX1011-15-W

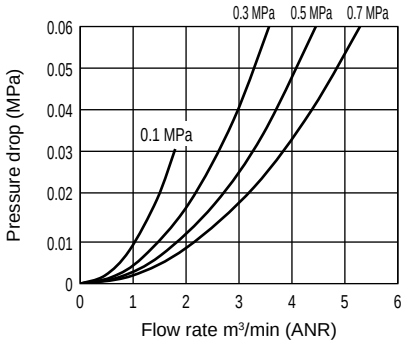

● FX1037-20-W

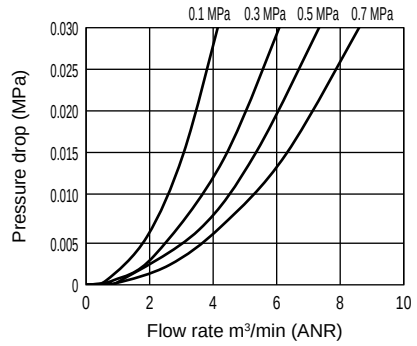

● FX1037-25-W

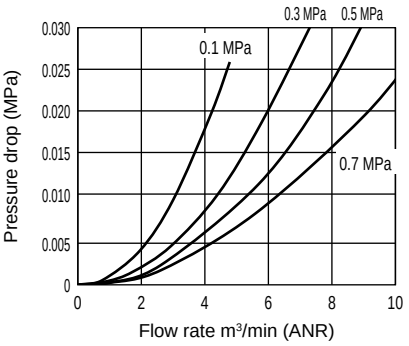

Max. processing flow rate

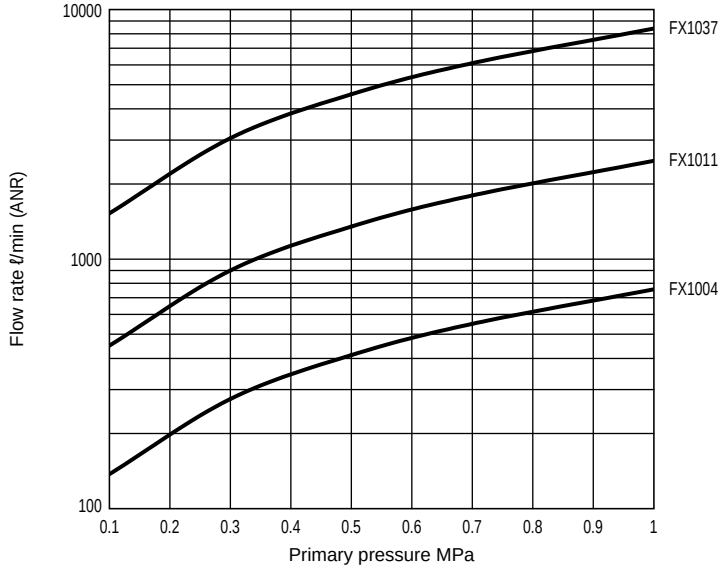

Dimensions

● FX1004-W

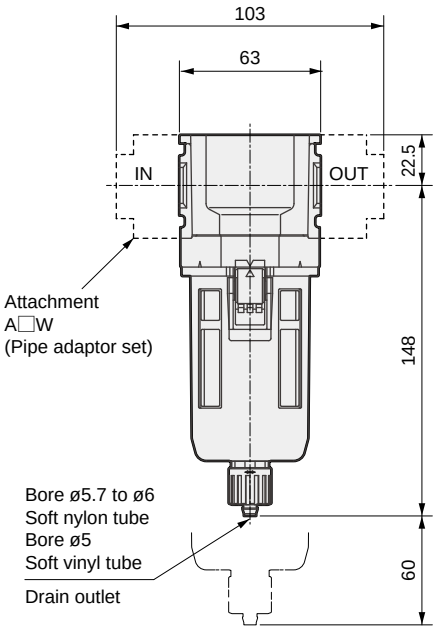

Maintenance dimensions

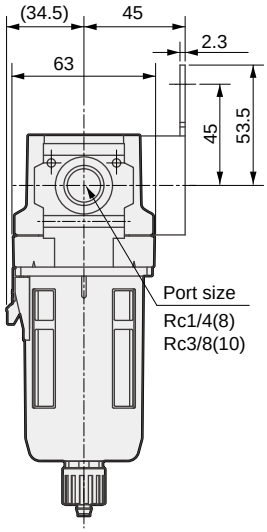

· Attachment
C-bracket (-BW)
Part model No.: B320
· Material: Steel
Zinc plated

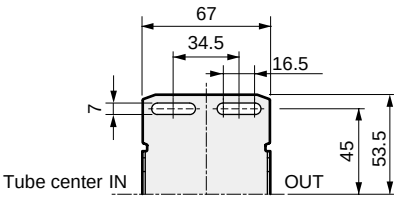

● For the plastic bowl, the dimensions of the manual cock and the auto-drain are the same.

Note: The C type bracket and pipe adaptor set attachments cannot be used together.

● FX1011-W

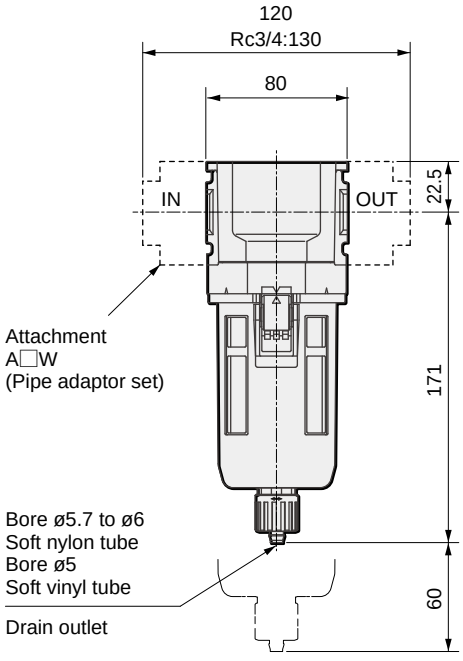

Maintenance dimensions

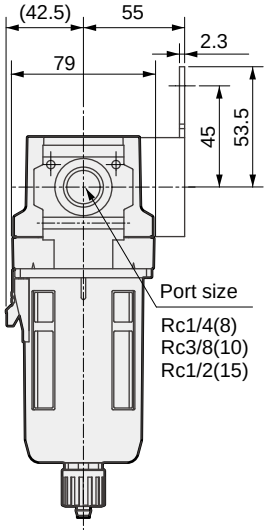

· Attachment
C-bracket (-BW)
Part model No.: B420
· Material: Steel
Zinc plated

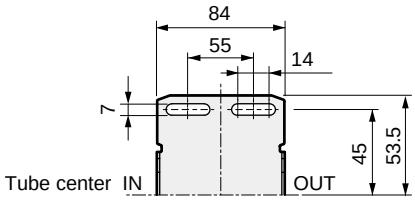

● For the plastic bowl, the dimensions of the manual cock and the auto-drain are the same.

Note: The C type bracket and pipe adaptor set attachments cannot be used together.

Dimensions

● FX1037-W

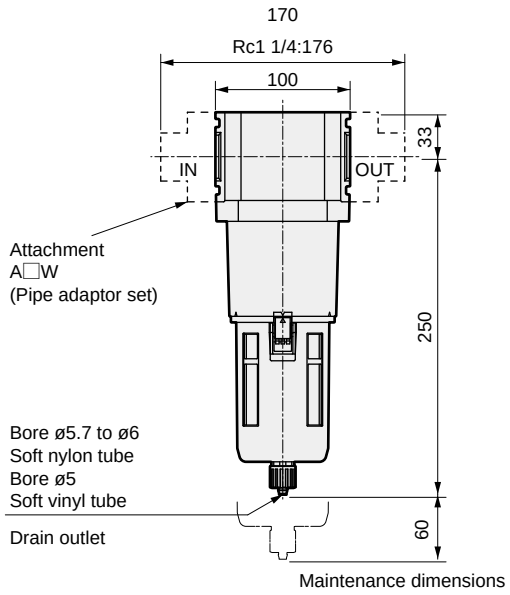

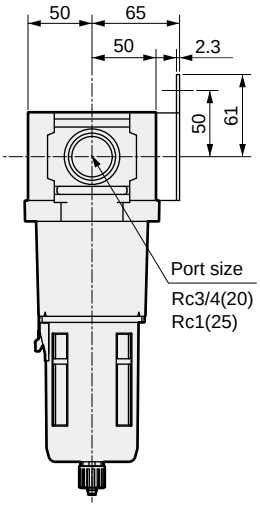

· Attachment
C-bracket (-BW)
Part model No.: B820
· Material: Steel
Zinc plated

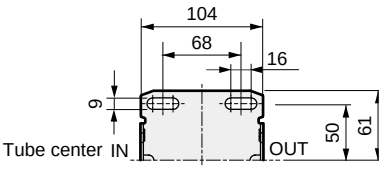

● For the plastic bowl, the dimensions of the manual cock and the auto-drain are the same.

Note: The C type bracket and pipe adaptor set attachments cannot be used together.

Optional dimensions

● Metal bowl FX1004-W/FX1011-W/FX1037-W (option)

Metal bowl with auto-drain (FM, F1M)

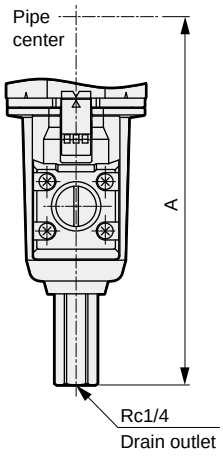

Metal bowl with manual cock (CM)

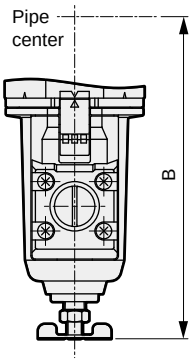

Metal bowl without cock (M)

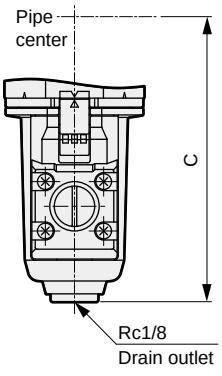

Metal bowl with manual cock (CM1, FM1, F1M1)

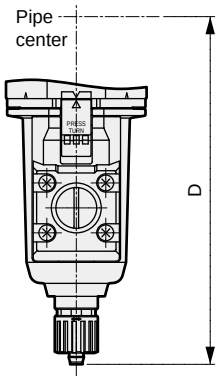

Dimensions table

Model No.	FM/F1M	CM	M	CM1/FM1/F1M1
	A	B	C	D
FX1004	164	143.5	127	154
FX1011	187	166.5	150	177
FX1037	266	245.5	229	256

Safety precautions

Be sure to read this section before use.

⚠ WARNING

■ Design/selection

- This product is for industrial use. Do not use for medical purposes, or in any equipment or circuit that concerns human life.
- The plastic bowl is made of polycarbonate or nylon. It cannot be used in environments containing synthetic oil, organic solvents, chemicals, coolant, screw locking agent, leak detection solutions, or hot water, etc., or where these substances may come in contact with the product.
  Refer to the following page for details on plastic bowl chemical resistance.
- Piping load torque
  Avoid applying piping load or torque to the body or pipes.

Series	FX1004	FX1011	FX1037
Max. torque N·m	50	50	100

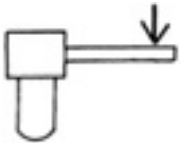

■ Use/maintenance

- Perform periodic inspection once every six months or less to check for any cracks, scratches, or other damage to the plastic bowl. Replace the bowl with a new plastic or metal one if you find any damage.
- Check the plastic bowl periodically for contamination.
  · If it is dirty or if transparency has decreased, replace with a new bowl.
  · Wash with diluted household detergent in order to avoid damage, and then rinse well with pure water.
- Removing the bowl
  Stop the compressed air supply. Release the pressure in the bowls completely and make sure that there is no residual pressure before removing the bowls.
- Drain so that the drain separator moisture does not accumulate beyond the upper limit.
  Components could malfunction if moisture flows into the secondary side.

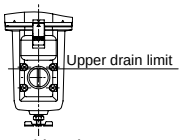

Metal bowl

· The resin bowl must not be filled above the points marked "Drain upper limit" or "MAX LEVEL" on the bowl guard.

⚠ CAUTION

■ Design/selection

- Water-lubricated compressor circuit
  Take measures to prevent chlorine-based substances from entering the compressed air.
- Use the auto-drain under the working conditions below. Otherwise, malfunction may occur.
  NO auto-drain (exhaust when not pressurized): For "F"
  · Use a compressor with a capacity of 0.75 kW {90 l/min [ANR]} or more.
  · Set the working pressure to 0.1 MPa or more. (Air is purged with initial drainage until pressure reaches 0.1 MPa.)
  NC auto-drain (no exhaust when not pressurized) For "F1"
  · A compressor with a capacity of 0.75 kW or less can also be used.
  · Set the working pressure to 0.15 MPa or more.
- The auto-drain may not work correctly if a large amount of drain enters. If there is a large amount of drain, select the bowl option "M" and perform regular drainage using a solenoid valve or the like from the drain pipe.

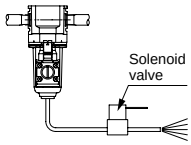

■ Mounting, installation and adjustment

- Avoid installing this product where it is subject to direct ultraviolet.
- Flush and clean the pipes.
  Dirt or foreign matter remaining in the piping will deteriorate product performance.
- Make sure that no foreign matter enters the pipes when connecting the pipes and fittings.
  When screwing in piping or fittings, check that swarf from port threads or sealant does not get inside. Dirt or foreign matter remaining in the piping will deteriorate product performance.
- Using the drain separator correctly
  1. Confirm the direction of the arrow indicating the flow direction before connecting, and make sure that the flow direction is correct when piping. If the flow direction is incorrect, the drain cannot be isolated. (It will cause the drain to flow out from the secondary side.)
  2. Install the case downward and vertically.Otherwise, drain discharge failure could result.
  3. Avoid use of the auto-drain where vibration is present, as this could cause faults and malfunctions.
- Pipe auto-drain piping as follows:
  Otherwise, malfunction may occur.
  Use an inner diameter of ø5.7 or more and piping of 5 m or more for the drain discharge section. Do not route it vertically.
  Do not route it vertically. Pipe so that no lateral load is applied on the bowl.
  When you tighten a fitting into an Rc1/4 female thread, hold the hexagon part of the cock.
- Piping screw-in torque
  Make sure that excessive torque is not applied on the body and piping when piping.

Series	FX1004	FX1011	FX1037
Max. torque N·m	30	30	70



- Drain piping
  · The drain piping for the plastic bowl has a barbed nipple, and can be directly installed; confirm that the drain cock is closed before inserting the tube. Do not route it vertically. Pipe so that no lateral load is applied on the bowl. Do not fix the tube connected to the drain outlet with a lateral load applied. If drainage is performed with a lateral load applied, external leakage may occur.
  Contact CKD when attaching a separate valve to the tube tip that is inserted to the drain outlet to control drainage.
- Drain cock tightening torque
  · The maximum tightening torque of the drain cock of the bowl is 0.5 N·m.
- Drain piping of metal bowl with auto-drain
  · When tightening a fitting into the drain outlet female thread, hold the hexagon part of the cock.When using the metal bowl with auto-drain, if the drain is piped with a tightening fitting, manual operation is not possible.

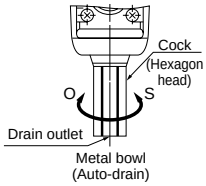

■ Use/maintenance

- Do not disassemble or modify the product.
- Read the instructions and precautions included with the product before use or maintenance.
  · Drainage starts when the cock is turned in the O direction, and the discharge stops when turned in the S direction.
  Tighten by hand in the S direction.
  · With auto-drain, drainage is discharged automatically when it accumulates. Drainage can also be discharged manually.

Drainage method

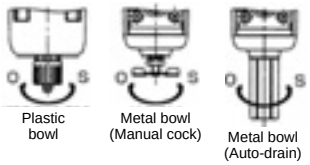

Removing the resin bowl

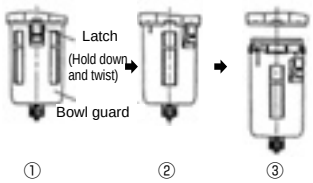

Removing the metal bowl

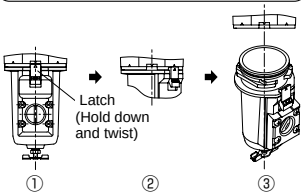

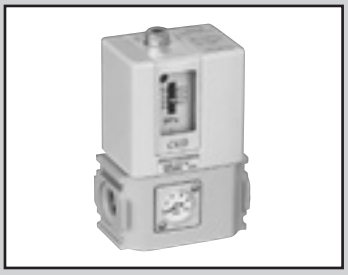

Mechanical pressure switch Standard White Series

P4000-W Series

Wide pressure setting range covers 0.1 to 0.8 MPa.

● Port size: 1/4 to 1/2

JIS symbol



RoHS CAD

Specifications

Item	P4000-8-W	P4000-10-W	P4000-15-W
Working fluid	Compressed air		
Max. working pressure MPa	1.0 (≈150 psi, 10 bar)		
Proof pressure MPa	1.5 (≈220 psi, 15 bar)		
Pressure adjusting range MPa	0.1 (≈15 psi, 1 bar) to 0.8 (≈120 psi, 8 bar)		
Ambient / fluid temperatures °C	5 (41°F) to 60 (140°F)		
Port size Rc	1/4	3/8	1/2
Micro switch	Z-15GD-B (OMRON)		
Contact array	1C		
Hysteresis MPa	0.1 (≈15 psi, 1 bar) to 0.49 (≈71 psi, 4.9 bar), hysteresis within 0.049 (≈7.1 psi, 0.49 bar)		
	0.5 (≈73 psi, 5 bar) to 0.8 (≈120 psi, 8 bar), hysteresis within 0.078 (≈11 psi, 0.78 bar)		
Repeatability MPa	±0.02 (≈2.9 psi, 0.2 bar) of set pressure		
Allowable operation frequency times/min.	20		
Insulation resistance MΩ	100 or more (with 500 VDC megger)		
Weight kg	0.5		
Mounting orientation	Install adjusting screw vertically		

Micro switch rated

Load	Non-inductive load (A)				Inductive load (A)			
Circuit	Resistance load		Lamp load		Inductive load		Electric motor load	
Voltage	N.C	N.O	N.C	N.O	N.C	N.O	N.C	N.O
125 VAC	15	15	3.0	1.5	15	15	5.0	2.5
250 VAC	15	15	2.5	1.25	15	15	3.0	1.5
30 VDC	6.0	6.0	3.0	1.5	5.0	5.0	5.0	2.5

Option weight

* Add to the weight of the standard accessories.

Unit: kg

Code	Attachment				Bracket
	A8*W	A10*W	A15*W	A20*W	BW
P4000	0.16	0.16	0.16	0.16	0.21

How to order

P4000 - 8 - W - 1N - BW

Ⓐ Port size

Ⓑ Option

Ⓒ Attachment

Code		Description
Ⓐ Port size		
8		Rc1/4
10		Rc3/8
15		Rc1/2
Ⓑ Option		
Light	Blank	Without indicator lamp
	1N	100/200 VAC with indicator lamp
	3N	24 VDC with indicator lamp
Pressure gauge	Blank	With standard pressure gauge (G401-W)
	T	No pressure gauge (gauge port (Rc 1/4) is assembled sealed)
	T8	Pressure gauge ready (gauge port (Rc 1/4) is left open)
Ⓒ Other attachments		***1, *3**
Blank		Not included
A8W		Rc1/4 pipe adaptor set
A10W		Rc3/8 pipe adaptor set
A15W		Rc1/2 pipe adaptor set
A20W		Rc3/4 pipe adaptor set
BW		C-bracket

⚠ Precautions for model No. selection

*1: C-bracket and pipe adaptor set cannot be used together.
*2: Due to the modular design, a gasket is attached.
*3: The joiner set is enclosed with the pipe adaptor set.

Internal structure and parts list

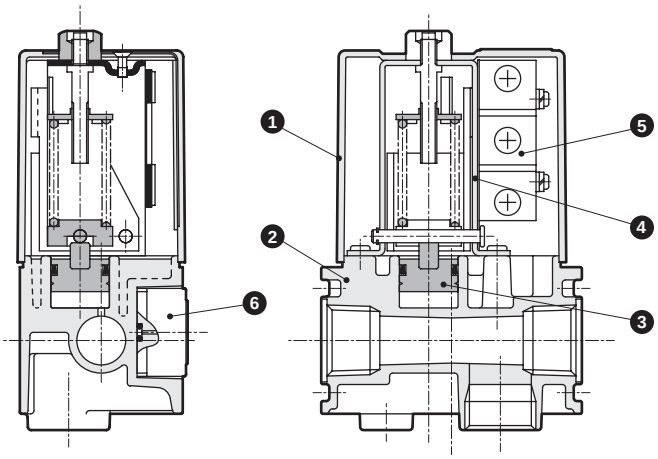

No.	Part name	Material	No.
1	Cover	Resin	-
2	Body	Aluminum alloy die-casting	-
3	Piston assembly	Polyacetal resin, nitrile rubber	-
4	Frame	Steel	-
5	Micro switch	-	Z-15GD-B [OMRON]
6	Pressure gauge assembly	PBT resin, copper alloy	G401-W

* To wire, remove cover (1), and connect directly to the micro switch (5).
* One gasket is enclosed.

Dimensions CAD

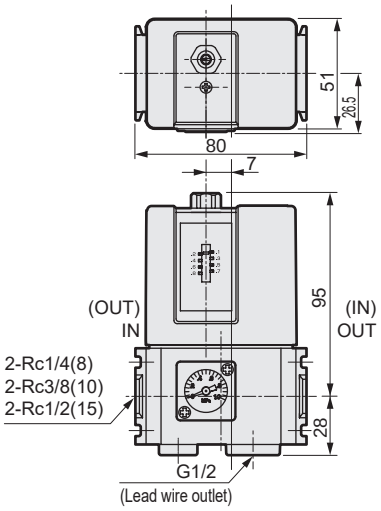

Reduction rate 0.24.
(Photocopy at 141% four times to see actual dimensions.)

How to assemble

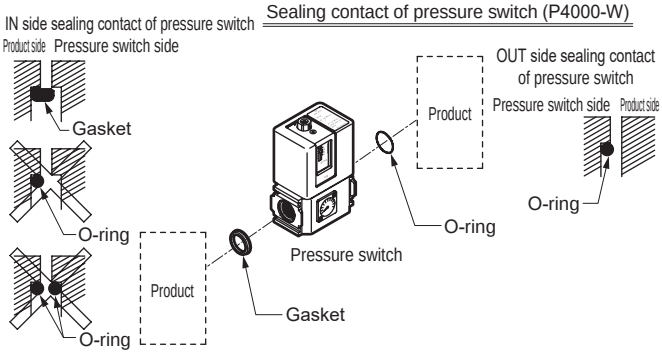

Safety precautions

■Design/selection

⚠ CAUTION

1 Micro switch contact specifications

Regular closed circuit max. 30 A Regular open circuit max. 15 A

Starting current should be measured beforehand.

■Mounting, installation and adjustment

⚠ CAUTION

1 When wiring, loosen cover fastening screws, remove the cover, then wire to the micro switch inside.

2 Wiring the sensor with lamp

- The lamp is connected to the micro switch's NC terminal and NO terminal. As a fine current flows even when the load (relay, etc.) is not energized, take care when selecting the load.
  100 VAC 1.5 mA 200 VAC 2.0 mA 24 VDC 4.5 mA
- To turn the lamp ON at the set pressure or more, and OFF at the set pressure or lower, wire to the micro switch COM terminal and NC terminal.
  Attach [Pressure Rise → Lamp ON] plate at a visible section on the cover.
- To turn the lamp ON at the set pressure or lower, and OFF at the set pressure and over, wire to the micro switch COM terminal and NO terminal.
  Attach [Pressure Rise → Lamp OFF] plate at a visible section on the cover.
- If there is a large amount of drainage, pipe so that the pressure adjustment screw is facing upward.

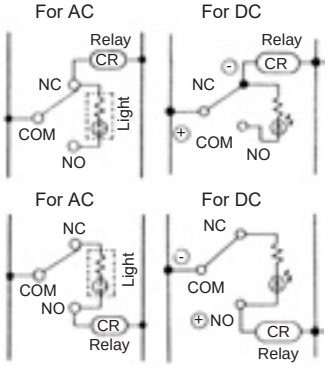

3 Avoid using in hot environments as the cover is made of resin.

4 Hold the body section when piping or installing.

5 Use with air that has been passed through an air filter.

6 Use the pressure absorbing nipple (6556) to detect sudden changes in pressure, such as when confirming air cylinder pressure.

7 Loosen the nut on the top of the cover, and adjust the pressure with the adjusting screw. The set pressure rises when the nut is turned to the plus (+) side and drops when turned to the minus (-) side. (Work tools: Wrench 13 mm, flat-tip screwdriver) Fix with the nut after setting.

8 The scale plate is for reference. (scale error: within ±0.05 MPa)

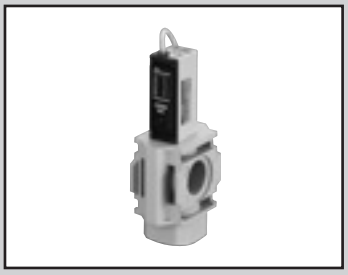

Reed switch compact mechanical pressure switch Standard White Series

P1100-W/P4100-W/P8100-W Series

· Compatible with module connection to SELEX F.R.L.

JIS symbol 

RoHS CAD

Specifications

Item	P1100-W	P4100-W	P8100-W
Working fluid	Compressed air		
Max. working pressure MPa	1.0 (≈150 psi, 10 bar)		
Set pressure MPa	0.1 (≈15 psi, 1 bar) to 0.6 (≈87 psi, 6 bar)		
Hysteresis MPa	0.08 (≈12 psi, 0.8 bar) or less		
Repeatability MPa	±0.02 (≈2.9 psi, 0.2 bar) or less		
Contact array	1a *1		
Wiring	Lead wire (oil resistant vinyl cabtyre cord 2-conductor 0.2 mm^2)		
Ambient / fluid temperatures	5 (41°F) to 60 (140°F)		
Degree of protection *2	IP20 or equivalent		
Product weight (excluding joiner) kg	0.13	0.19	0.41

*1: The contact turns ON if air pressure exceeding the scale set pressure is applied.
*2: Note that when connecting an option fitting into the atmospheric pressure inlet port and extend the tube until water does not enter, IP65 or equivalent is applied. Not for outdoor use.

Wiring section specifications		
Load voltage	12/24 VDC	100 VAC
Load current	5 to 50 mA	7 to 20 mA
Internal voltage drop	3 V or less	
Light	LED (Lit when ON)	
Max. shock resistance	294 m/S^2	
Insulation resistance	20 MΩ and over at 500 VDC megger	
Withstand voltage	No failure after 1 minute of 1,000 VAC application.	

Option weight

* Add to the weight of the standard accessories.

Unit: g

Code	Attachment						Lead wire length	
	Blank	B11W	B31W	B41W	B81W	4	3	5
P1100	11	24				2	30	60
P4100	36		86	94		2	30	60
P8100	94				170	2	30	60

Internal circuit diagram

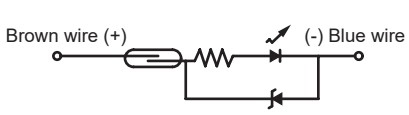

How to assemble (P1100-W, P4100-W, P8100-W)

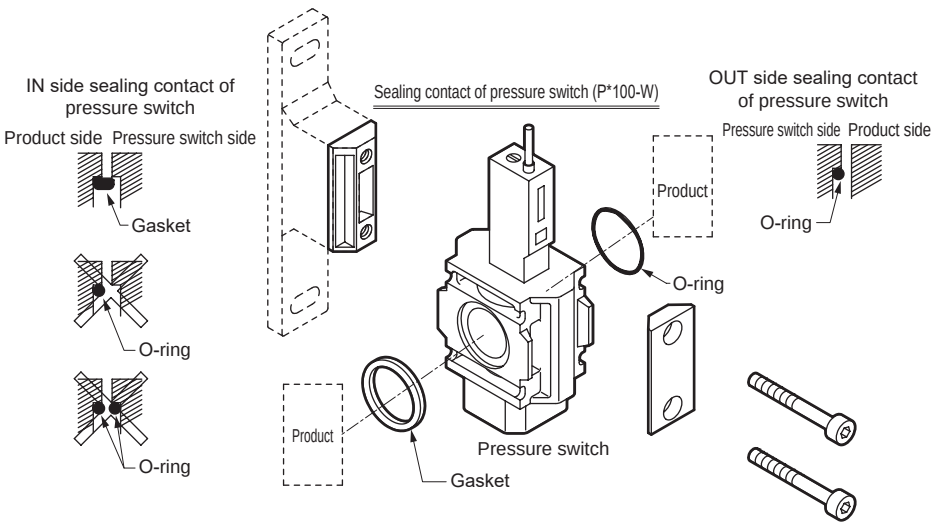

How to order (modular design)

P 1100 - 6 L - W - B11W - 3 - ( )
(White type)

Ⓐ Series model No.
Ⓑ Port size
Ⓒ Branch direction
Ⓓ Attachment
Ⓔ Length of lead wire
Ⓕ Option

Code	Description
Ⓐ Series model No.	
1100	1000-W Series modular design
4100	2000-W, 3000-W, 4000-W Series modular design
8100	6000-W, 8000-W Series modular design

Ⓑ Port size

		1100	4100	8100
6	Rc1/8	●		
8	Rc1/4	●	●	
10	Rc3/8		●	
15	Rc1/2		●	
20	Rc3/4			●
25	Rc1			●

Ⓒ Branch direction *1

Blank *2	L	R
		

Ⓓ Attachment

		1100	4100	8100
Blank	Joiner set, gasket	●	●	●
B11W	T-bracket, gasket	●		
B31W	T-bracket, gasket		●	
B41W	T-bracket, gasket		●	
B81W	T-bracket, gasket			●
4	Fitting for atmosphere inlet port attached (M3 elbow)	●	●	●

Ⓔ Length of lead wire

Blank	1 m
3	3 m
5	5 m

Ⓕ Option

Blank	None
P6	Copper and PTFE free specification (made-to-order product)

⚠ Precautions for model No. selection

*1 : This is used for intermediate connection of the module series so the module connection section is not threaded.
*2 : A plug matching the port size is included.
*3 : When piping the P□100-W single unit, use pipe adaptor A□00-W.
(The horizontal direction port does not have threads.)

Specifications for rechargeable battery (Catalog No. CC-1226A)

● Structure compatible with rechargeable battery manufacturing process

P4100 - …… - P4

Dimensions CAD

● P1100-W

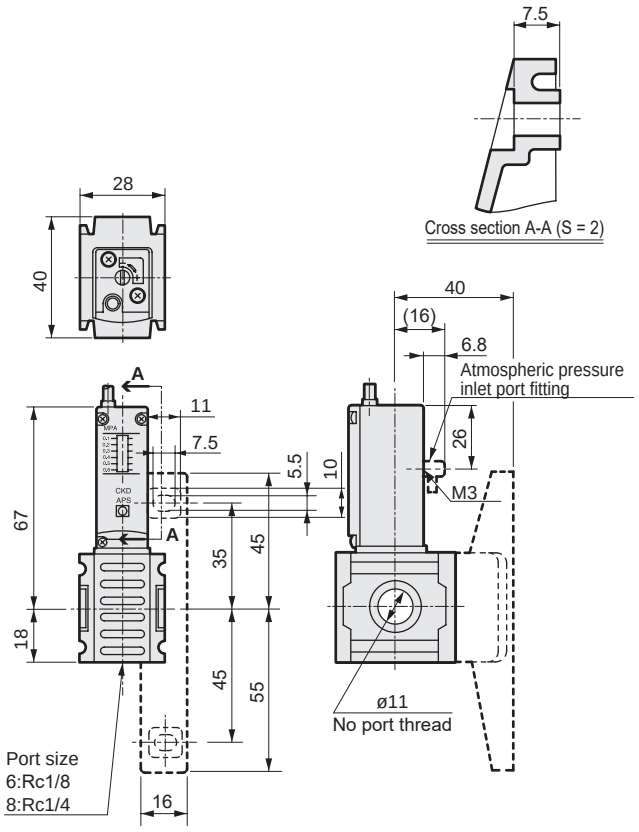

Weight 126 g

● P4100-W

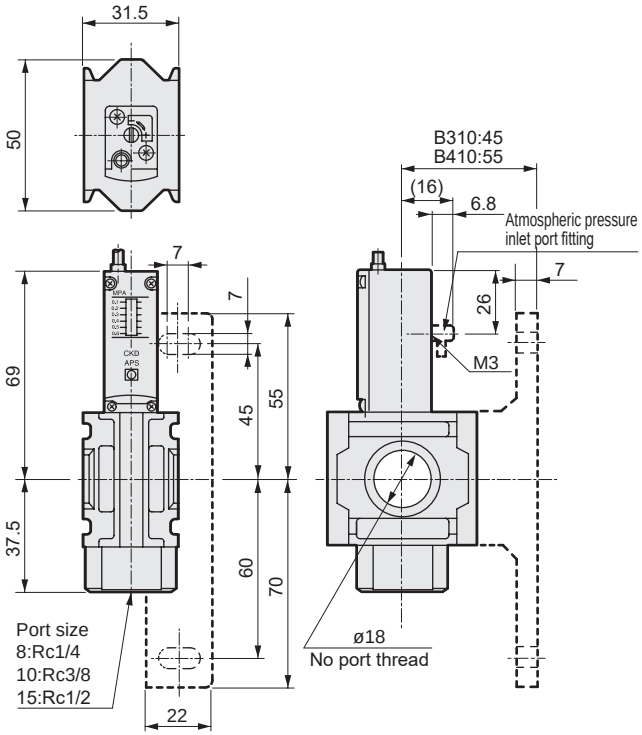

Weight 190 g

● P8100-W

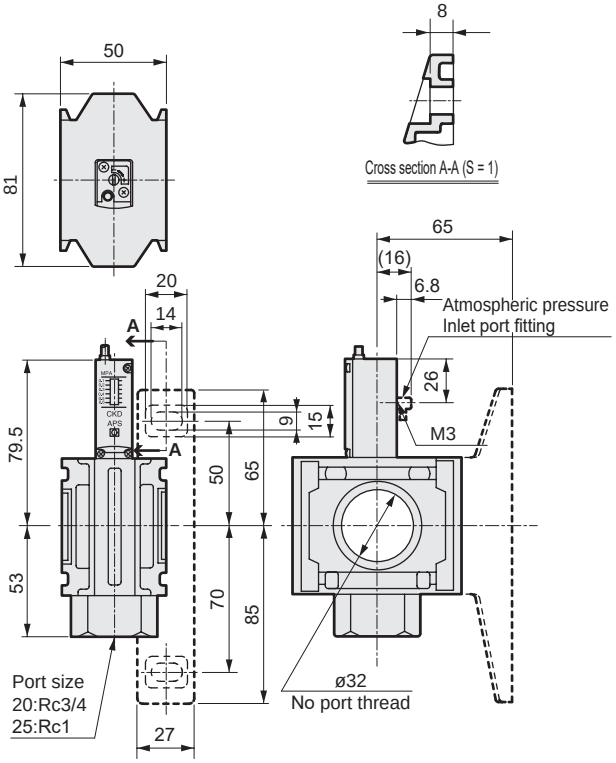

Weight 467 g

⚠ Precautions for use

■ Mounting, installation and adjustment

⚠ CAUTION

1 Setting pressure

- Pressure displayed on the scale plate is used as the reference. When setting pressure, refer to the separate pressure gauge.
- Pressure displayed on the scale plate is the value when the contact is OFF. To set the value when the contact is ON, set the pressure displayed on the scale plate to a value smaller than that from which hysteresis has been subtracted. If not set, operation may not take place at the set value (see the figure below). (Hysteresis refers to the pressure range from when the switch is turned on to the set pressure until the pressure drops and the switch turns OFF.)

Operation chart

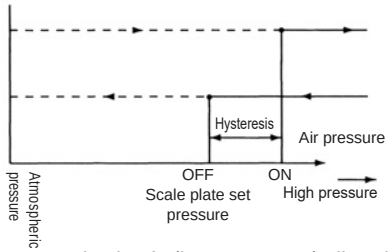

- Turning the adjusting screw in the L (low pressure) direction further from 0.1MPa setting activates the stopper and the adjusting screw does not turn. Note that if torque is forcibly applied in the L (low pressure) direction, the adjusting screw may lock and become inoperable.

2 Installation:

- Do not drop or bump the product when handling it.
- Wire such that repeated bending or tension are not applied to the lead wires. Otherwise, this could lead to disconnection.
- Do not use the product near a strong magnetic field or large current (large magnet or spot welding machine, etc.). This may cause malfunction.
- The pressure switch is equivalent to IP-20, but the installation direction is limited to upward vertical. If water enters the atmospheric pressure inlet port from below, pipe an M3 fitting and extend with tubing to where water does not enter. Do not plug the atmospheric pressure inlet port. Plugging could cause malfunctions to occur. Not for outdoor use.



- P*100 Series
  If there is drainage in pneumatic piping, install so that the pressure switch is higher than the drain.
- Do not pressurize the atmospheric release port or blow it with compressed air. Product performance could decrease or the product could be damaged.

3 Wiring

- Connecting the lead wire
  (1) Do not connect the lead directly to the power supply. Connect the load serially. Failure to do so may result in burning out the lamp or melting the contact.
  (2) When used for DC, connect the brown wire on the positive ⊕side and the blue wire on the negative ⊖ side. The lamp will not come on if wires are connected in reverse.
  (3) When connected to the AC relay or PC input, the switch lamp may not come on if the circuit is half-wave rectified. In this case, the lamp comes on if the switch lead wire polarity is reversed.
- Contact capacity
  Do not exceed the specified load voltage or load current range. Failure to do so may result in burning out the lamp or melting the contact. The lamp may not come on if the current is less than the rated current.
- Contact protection
  When using this sensor with an inductive load such as a relay, provide the contact protection circuit shown below. The contact could melt if this protection circuit is not provided.

● Diode

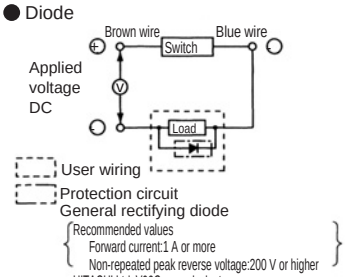

● Capacitor and resistance used

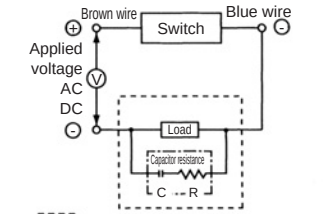

(2) If DC wiring exceeds 50m or AC wiring exceeds 10m, the wiring capacity will be reached, and a rush current will occur, damaging the switch or shortening the service life.Install a contact protection circuit if the wiring length is exceeded.

● Choke coil used

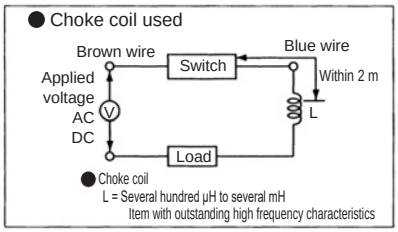

● Resistance used

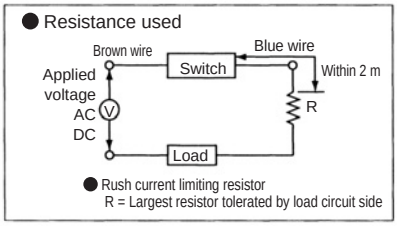

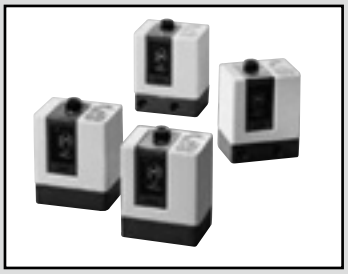

Mechanical pressure switch

APE Series

Repeatability: Within ±0.02 MPa, set pressure: 0.1 to 0.8 MPa.

● Port size: Rc1/4

JIS symbol 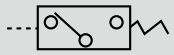

RoHS CAD

Specifications

1 MPa ≈ 145.0 psi, 1 MPa = 10 bar

Item		APE
Working fluid		Compressed air
Max. working pressure	MPa	1.0 (≈145 psi, 10 bar)
Proof pressure	MPa	1.5 (≈217 psi, 15 bar)
Set pressure	MPa	0.1 (≈15 psi, 1 bar) to 0.8 (≈116 psi, 8 bar)
Fluid temperature	°C	5 (41°F) to 60 (140°F)
Micro switch		Z-15GD-B (OMRON)
Contact array		1C
Hysteresis	MPa	0.1 (≈15 psi, 1 bar) to 0.49 (≈71 psi, 4 bar), hysteresis within 0.049 (≈7 psi, 0 bar)
		0.5 (≈73 psi, 5 bar) to 0.8 (≈116 psi, 8 bar), hysteresis within 0.078 (≈11 psi, 0 bar)
Repeatability	MPa	Within ±0.020 (≈2 psi, 0 bar) of set pressure
Ambient temperature	°C	-5 (23°F) to 60 (140°F) (no freezing)
Ambient humidity	%	90 or less
Max. working frequency	cycle/min.	20
Insulation resistance	MΩ	100 or more (with 500 VDC megger)
Mounting orientation		Arbitrary
Weight	kg	0.57

Micro switch rated

Load	Non-inductive load (A)				Inductive load (A)			
Circuit	Resistance load		Lamp load		Inductive load		Electric motor load	
Voltage	N.C.	N.O.	N.C.	N.O.	N.C.	N.O.	N.C.	N.O.
125 VAC	15	15	3.0	1.5	15	15	5.0	2.5
250 VAC	15	15	2.5	1.25	15	15	3.0	1.5
30 VDC	6.0	6.0	3.0	1.5	5.0	5.0	5.0	2.5

How to order

APE - 8T - 1N

Mechanical pressure switch

Ⓐ Wiring/piping method
*1
*2

Ⓑ Indicator lamp

Code		Description
Ⓐ Wiring/piping method		
8T	**Standard**	Air piping port Rc1/4, electric wire outlet port G1/2
8N	**Standard**	Air piping port Rc1/4, electric wire outlet port ø10
8F	**Option**	Air piping O-ring, electric wire outlet port ø10
Ⓑ Indicator lamp		
Blank		Without indicator lamp
1N		100/200 VAC with indicator lamp
3N		24 VDC with indicator lamp

⚠ Precautions for model No. selection

*1: When NPT port size is required, indicate N after 8.
(Example) APE-8NT APE-8NN

*2: An O-ring (JIS B2401P10) and two hexagon socket head cap screws (M5 x 55 ℓ) are included with APE-8F as accessories.

[Example of model No.]

APE-8T-1N

Model No.: Mechanical pressure switch
Ⓐ Wiring/piping method: Rc1/4
Ⓑ Indicator lamp: With lamp for 100/200 VAC

Internal structure and parts list

● APE-8T

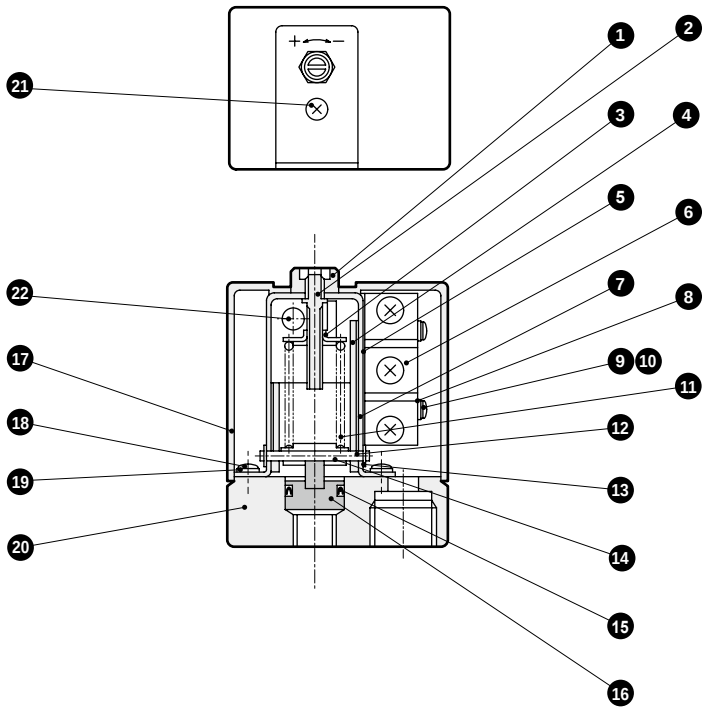

● APE-8N

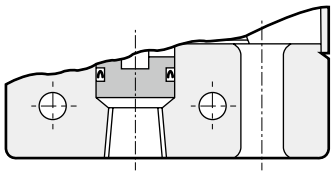

● APE-8F

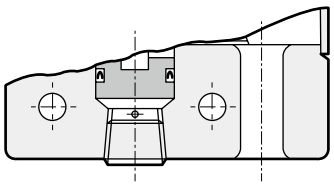

No.	Part name	Material	Remarks	No.	Part name	Material	Remarks
1	Nut	Steel		12	Pin	Steel	
2	Adjusting screw	Steel		13	E type snap ring	Steel	
3	Spring holder	Steel		14	Spring holder	Steel	
4	Lever	Steel		15	Y packing	Nitrile rubber	
5	Insulating plate			16	Piston	Polyacetal	
6	Micro switch		Z-15GD-B	17	Cover	ABS resin	
7	Frame	Steel		18	Cross-recessed pan head machine screw	Steel	M4 x 10
8	Flat washer	Steel	Nominal 3	19	Spring washer	Steel	Nominal 4
9	Cross-recessed pan head machine screw	Steel	M3 x 20	20	Body	Zinc die-cast	
10	Spring washer	Steel	Nominal 3	21	Cover securing screw	Steel	M3 flat head machine screw
11	Spring	Piano wire		22	Lamp		With indicator lamp (standard) only

Dimensions

● APE-8T

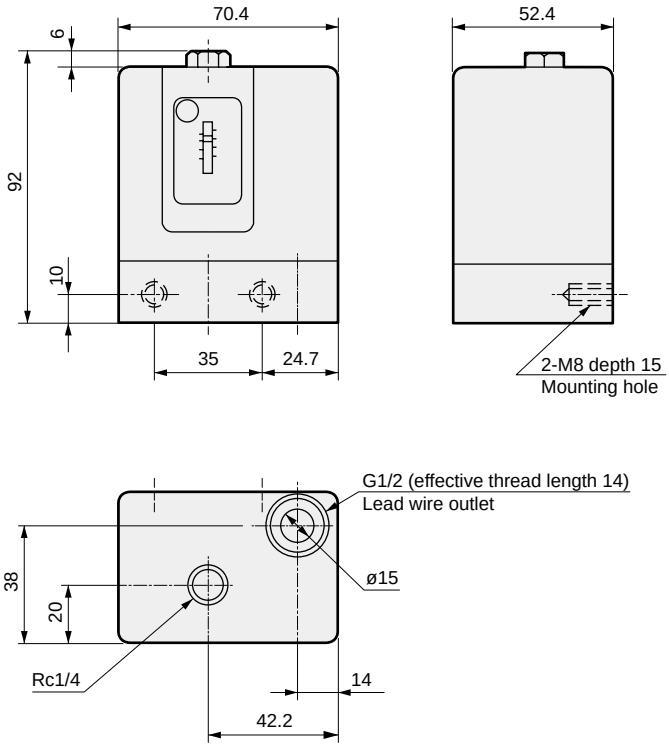

● APE-8N

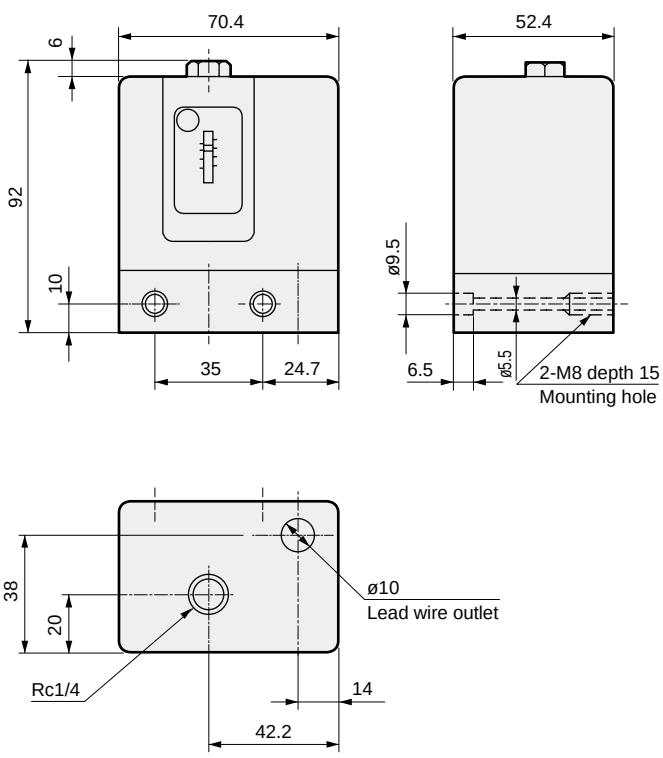

● APE-8F

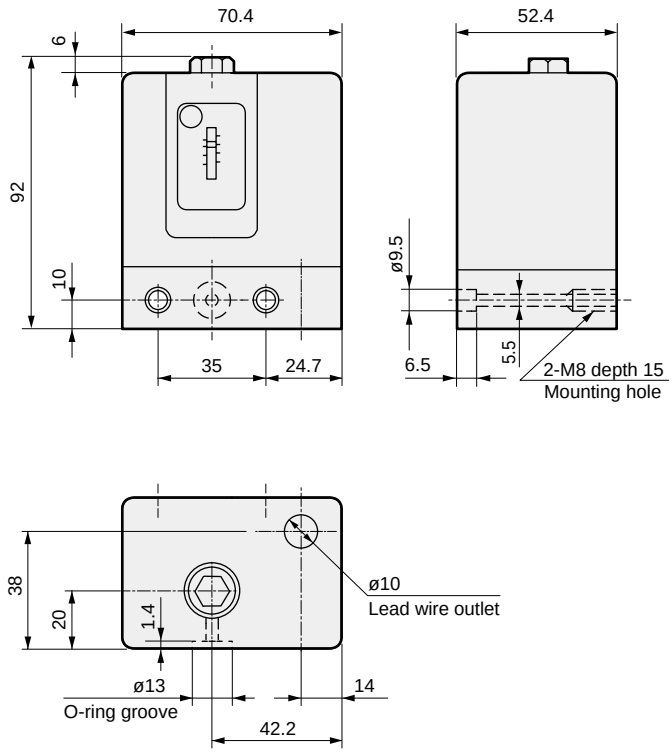

Related parts

● Pressure absorbing nipple part model No.: APE-6556

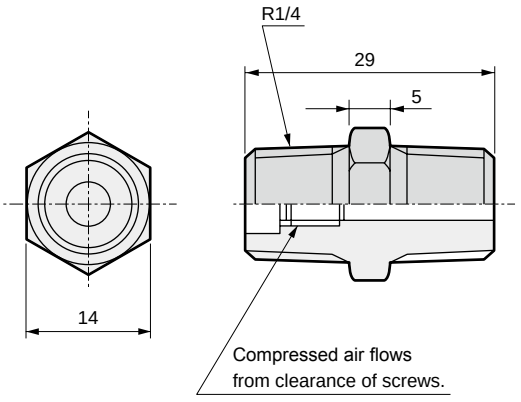

Weight: 27 g

Pressure absorbing nipple mounting dimensions

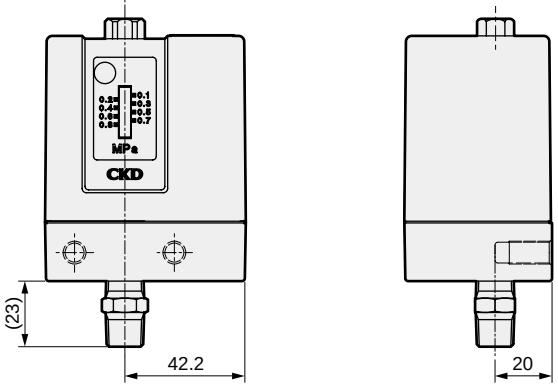

Product-specific cautions: Mechanical pressure switch APE Series

Design/selection

⚠ CAUTION

■ Select with consideration for rush current.
Micro switch contact specifications
Regular closed circuit max. 30 A
Regular open circuit max. 15 A
Starting current should be measured beforehand.

Mounting, installation and adjustment

⚠ CAUTION

■ When wiring, loosen cover fastening screws, remove the cover, then wire to the micro switch inside.

■ Wiring the sensor with lamp

- The lamp is connected to the micro switch's NC terminal and NO terminal. As a fine current flows even when the load (relay, etc.) is not energized, take care when selecting the load.
  100 VAC 1.5 mA
  200 VAC 2.0 mA
  24 VDC 4.5 mA
- To turn the lamp ON at the set pressure or more, and OFF at the set pressure or lower, wire to the micro switch COM terminal and NC terminal.Attach the included Pressure Rise → Lamp ON plate on a visible section of the cover.

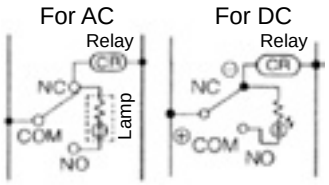

- To turn the lamp ON at the set pressure or lower, and OFF at the set pressure and over, wire to the micro switch COM terminal and NO terminal.at a visible section on the cover. Attach the Pressure Rise → Lamp OFF plate.

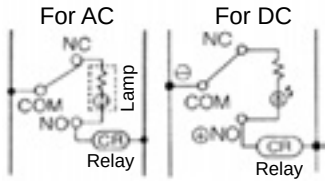

- If there is a large amount of drainage, pipe so that the pressure adjustment screw is facing upward.

■ Avoid using in hot environments, as the cover is made of resin.

■ Hold the body when piping or installing.

■ Use with air that has been passed through an air filter.

■ Use the pressure absorbing nipple (APE-6556) to detect sudden changes in pressure, such as when confirming air cylinder pressure.

■ When there are frequent rising and falling pressure pulsations, use the pressure absorbing nipple (APE-6556) in combination. When not using the pressure buffering nipple, service life may be reduced.

■ Loosen the nut on the top of the cover, and adjust the pressure with the adjustment screw. The set pressure rises when the set screw is turned to the plus (+) side and drops when tuned to the minus (-) side. (Work tools: Wrench 13 mm, flat-tip screwdriver) Fix with the nut after setting.

■ The scale plate is for reference.
(scale error: within ±0.05 MPa)



Compact mechanical pressure switch

APS-W Series

● General purpose discrete specifications (APS)

JIS symbol 

RoHS CAD

Specifications

Item	APS-W
Working fluid	Compressed air
Max. working pressure MPa	1.0
Set pressure MPa	0.1 to 0.6
Hysteresis MPa	0.08 or less
Repeatability MPa	±0.02 or less
Contact array	1a *1
Wiring	Lead wire (oil resistant vinyl cabtyre cable 2-conductor 0.2mm^2)
Ambient/fluid temperatures	5 to 60°C
Degree of protection *2	IP 65 or equiv.
Weight g	69

*1: The contact turns ON if air pressure exceeding the scale set pressure is applied.
*2: However, mounting direction is to be vertical. When water enters into the atmospheric release port from the bottom, connect an optional fitting and extend the tube until water does not enter. Not for outdoor use.

Wiring section specifications		
Load voltage	12/24 VDC	100 VAC
Load current	5 to 50 mA	7 to 20 mA
Internal voltage drop	3 V or less	
Lamp	LED (Lit when ON)	
Max. shock	294 m/S^2	
Insulation resistance	20 MΩ and over at 500 VDC megger	
Withstand voltage	No failure after 1 minute of 1,000 VAC application.	

Internal circuit diagram

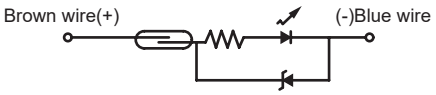

Option weight

* Add to the weight of the standard accessories.

Unit: g

	Lead wire length		Option		
Code	3	5	1	2	4
APS	30	60	6	7	1.5

How to order

APS - 6D 3 - W - 2
(White)

Model

Ⓐ Position of piping port/bore size/scale plate direction

Ⓑ Lead wire length

Ⓒ Option

Code	Description
Ⓐ Position of piping port/bore size/scale plate direction	
6B	Back surface Rc1/8, vertical *1
6D	Bottom surface Rc1/8, vertical
6F	Back surface flange, vertical
6L	Both side surfaces Rc1/8, vertical *1
6Y	Back surface flange, horizontal
Ⓑ Lead wire length	
Blank	1m
3	3m
5	5m
Ⓒ Option	
Blank	No
1	DIN rail bracket attached (6D) only
2	Nipple attached (6D) only
4	Fitting for atmospheric pressure inlet port (elbow for M3) attached

*1: When installing on the bottom, be careful not to block the atmospheric release port.

Specifications for rechargeable battery (CataroGNo.CC-1226)

● Design compatible with rechargeable battery manufacturing process

APS - ..... **-** **P4**

dimensions CAD

● APS-6B-W

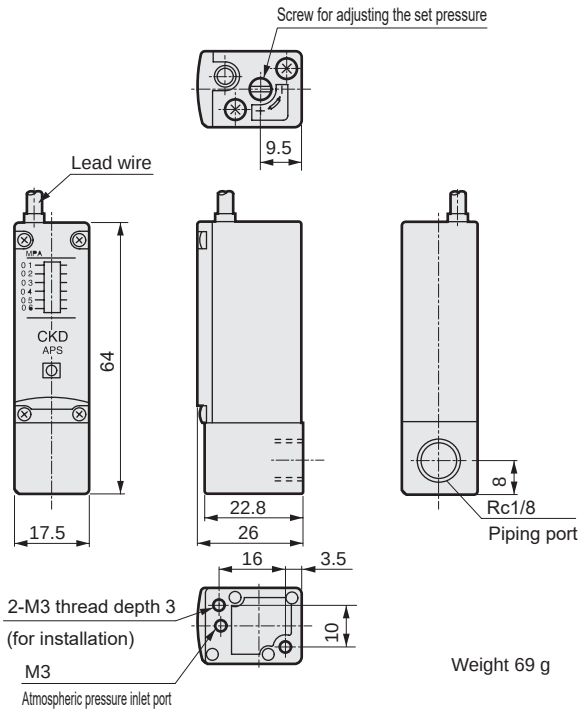

Weight 69 g

Note: When installing on the bottom, be careful not to block the atmospheric release port.

● APS-6D-W

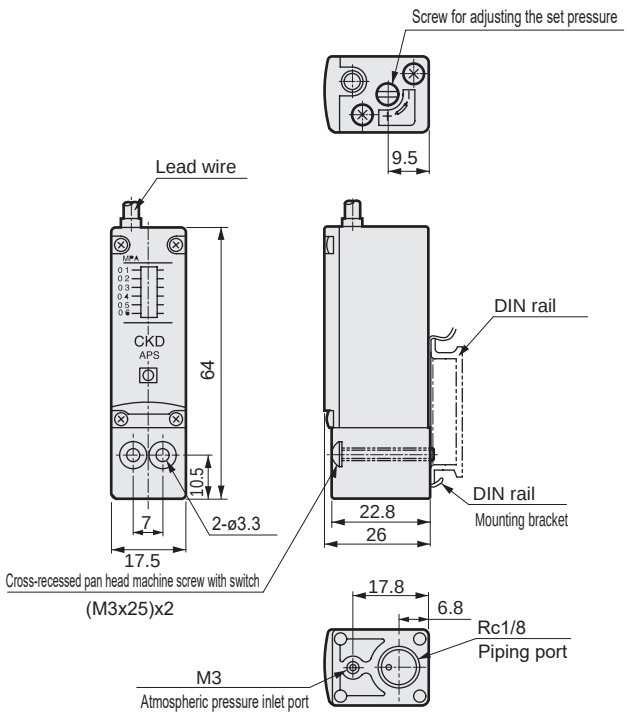

● APS-6F-W

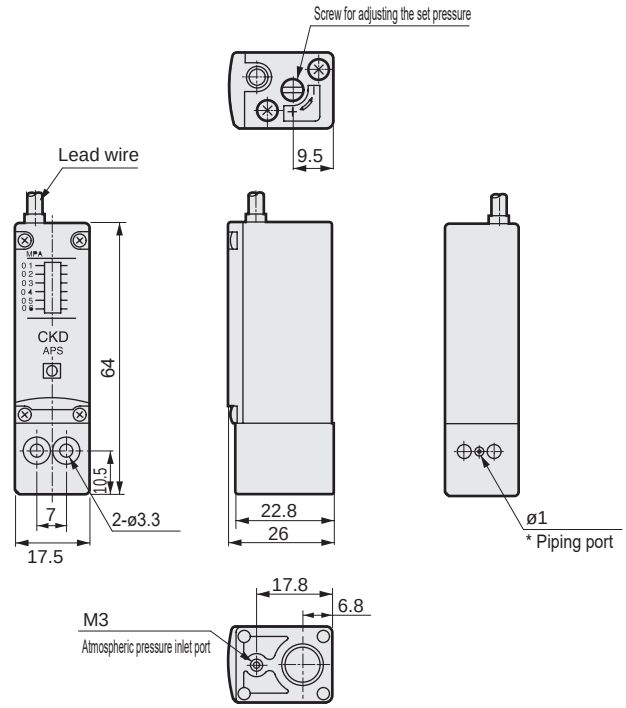

* CAUTION: The O-ring has a 1.2 inner diameter. Machine the pressure outlet hole on the installation surface to ø1 or less in diameter.

● APS-6L-W

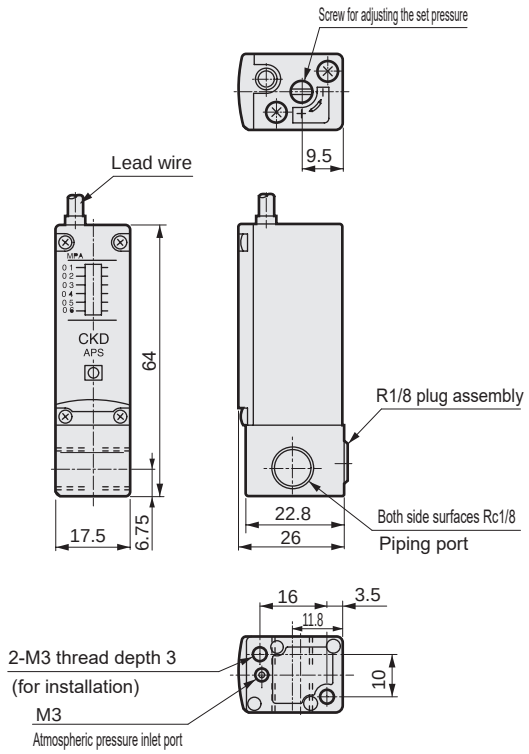

Note: When installing on the bottom, be careful not to block the atmospheric release port.

Dimensions

● APS-6Y-W

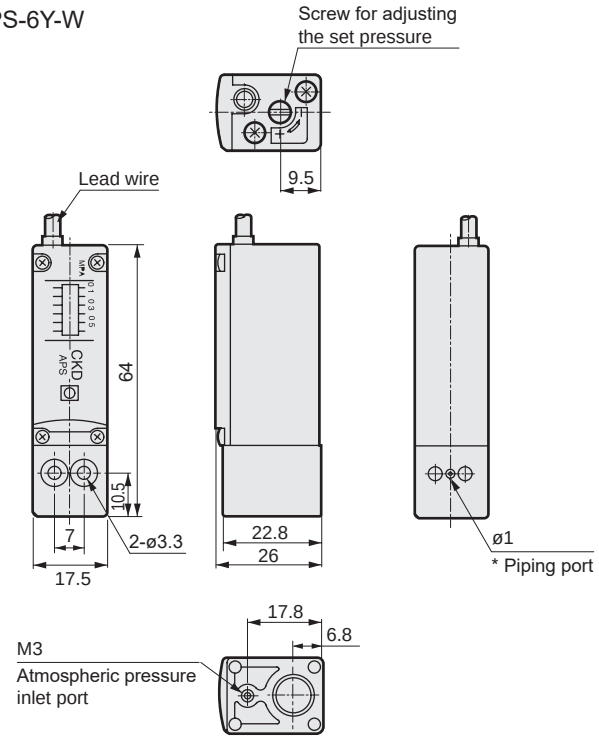

* CAUTION: The O-ring has a 1.2 inner diameter.
Machine the pressure outlet hole on the installation surface to ø1 or less in diameter.

Safety Precautions

Be sure to read this section before use.
For general precautions for pneumatic components, refer to Intro Page 63, and to "⚠ Safety precautions" for detailed precautions for individual series.

Product-specific cautions: Mechanical pressure switch APS Series

Mounting, installation and adjustment

⚠CAUTION

■Setting pressure

- The pressure displayed on the scale plate is used as a guideline. When setting pressure, refer to the separate pressure gauge.
- The pressure displayed on the scale plate is the value when the contact is OFF. To set the value when the contact is ON, set the pressure displayed on the scale plate to a value smaller than that from which hysteresis has been subtracted. (refer to the chart below) If not set as above, operation may not take place at the set value. (Hysteresis refers to the pressure range from when the switch is turned ON at the set pressure until the pressure drops and the switch turns OFF.)

Operation chart

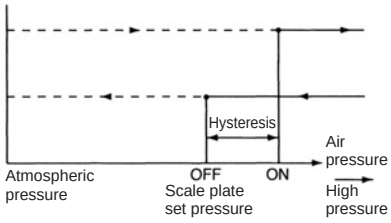

- Turning the adjusting screw in the L (low pressure) direction further from 0.1MPa setting activates the stopper and the adjusting screw does not turn. Note that if torque is forcibly applied in the L (low pressure) direction, the adjusting screw may lock and become inoperable.

■Installation:

- Do not drop or bump the product when handling it.
- Wire so that repeated bending or tension are not applied to the lead wires. Otherwise, this could lead to disconnection.
- Do not use the product near a strong magnetic field or large current (large magnet or spot welding machine, etc.). This may cause malfunction.
- Do not pressurize the atmospheric pressure inlet port or blow it with compressed air. Product performance could decrease or the product could be damaged.
- The APS Series is equivalent to IP-65, but the mounting direction is restricted to upward and vertical. If water enters the atmospheric pressure inlet port from below, pipe an M3 fitting and extend with tubing to where water does not enter. Do not plug the atmospheric pressure inlet port. Plugging could cause malfunctions to occur. Not for outdoor use.

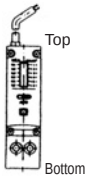

- When piping to the body Rc1/8 thread part, do not apply more than the recommended torque (3 to 5 Nm).

■Wiring

- Connecting the lead wire

(1) Do not connect the lead wire directly to the power supply. Be sure to connect the load serially. Failure to do so may result in burning out the lamp or melting the contact.
(2) When using for DC, connect the brown wire to the ⊕ side and the blue wire to the ⊖ side. The lamp will not come on if wires are connected in reverse.
(3) When connected to the AC relay or PC input, the switch lamp may not come on if the circuit is half-wave rectified. In this case, the lamp comes on if the switch lead wire polarity is reversed.

- Contact capacity

Do not exceed the specified load voltage or load current range. This may result in burning out the lamp or melting the contact. The lamp may not come on if the current is less than the rated current.

- Contact protection

(1) When using this sensor with an inductive load such as a relay, provide the contact protection circuit shown below. The contact could melt if this protection circuit is not provided.

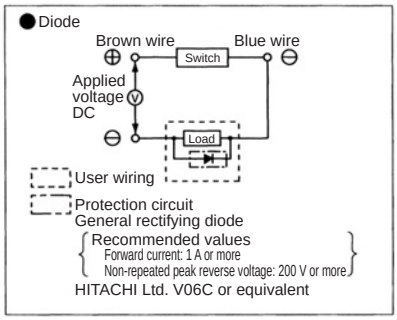

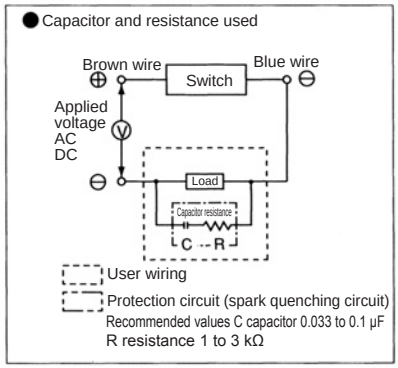

(2) If DC wiring exceeds 50 m or AC wiring exceeds 10 m, the wiring capacity will be reached and a rush current will occur, damaging the switch or shortening the service life. Install a contact protection circuit if the wiring length is exceeded.

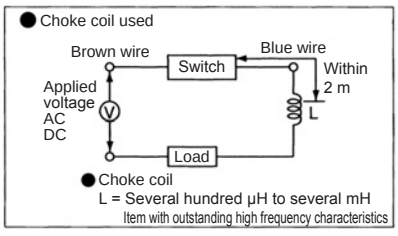

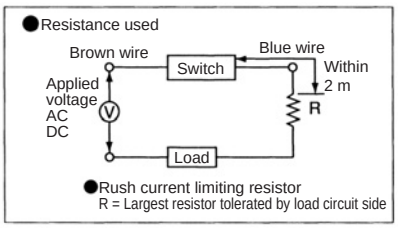

MEMO

Residual pressure exhaust valve

■ **F.R.L. unit**

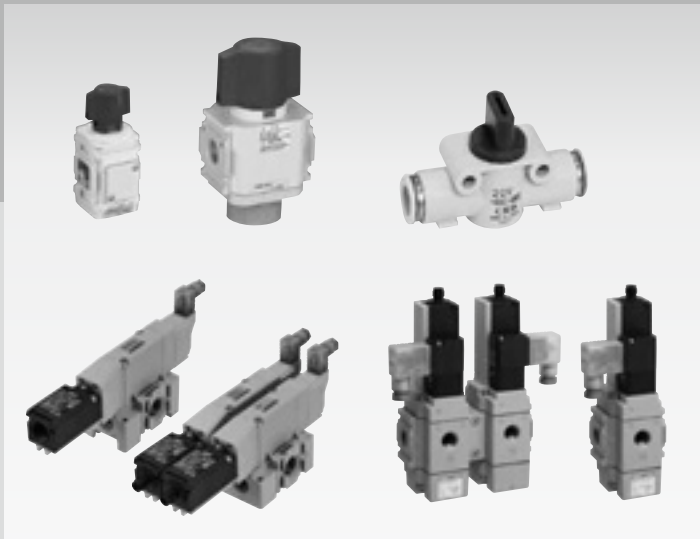

CONTENTS

- Residual pressure exhaust valve (V1000/V3000) 182
- Residual pressure exhaust valve with locking hole (V3010/V6010) 185
- Quick valve (with push-in fitting) (2QV/3QV) 188
- Residual pressure exhaust valve with spool position detection (SNS) 198
- 3-port solenoid valve with spool position detection (SNP) 206

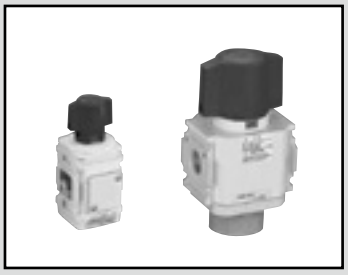

Residual pressure exhaust valve Standard White Series

V1000-W/V3000-W Series

One action exhaust operation. Ideal for preventing accidents due to residual pressure in pneumatic lines.

● Port size: 1/8 to 1/2

JIS symbol 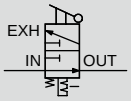

RoHS CAD

Specifications

Item	V1000-W	V3000-W
Appearance		

Item		V1000-6-W	V1000-8-W	V3000-8-W	V3000-10-W	V3000-15-W
Working fluid		Compressed air				
Max. working pressure	MPa	1.0 (≈150 psi, 10 bar)				
Proof pressure	MPa	1.5 (≈220 psi, 15 bar)				
Ambient / fluid temperatures	°C	5 (41°F) to 60 (140°F)				
Operation lever switching angle		90°				
Operating force	Pushing force N	18		80		
	Torque N·m	0.5		2		
Valve section leakage	cm^3/min(ANR)	10				
External leakage	cm^3/min(ANR)	10				
Port size	IN/OUT	1/8	1/4	1/4	3/8	1/2
(Rc,NPT,G)	EXH	1/8		3/8		
Weight	kg	0.17		0.25		
Effective cross-sectional area {mm^2}	IN/OUT	15	18	40	70	85
	OUT / EXH	5		40	50	50

Option weight

* Add to the weight of the standard accessories.

Unit: kg

Code	Attachment						
	A6*W	A8*W	A10*W	A15*W	A20*W	BW	S
V1000	0.09	0.09	0.09			0.1	0.004
V3000		0.16	0.16	0.16	0.16	0.17	0.015

Applications

Explanation: For safety, release compressed air in the pneumatic circuit from the residual pressure exhaust valve before repairing or adjusting the solenoid valve or air cylinder, etc.

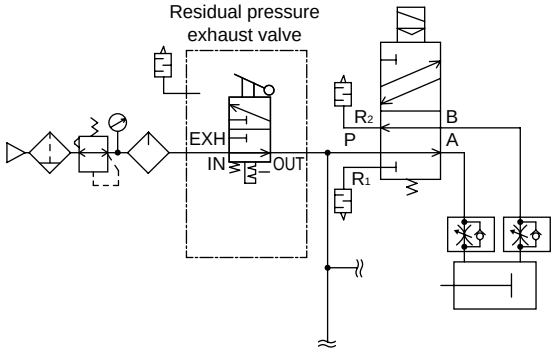

How to order

● F.R.L.1000 Series

V1000 - 6 ○ - W - ○ - ○ - A6W

● F.R.L.3000, 4000 series

V3000 - 8 ○ - W - ○ - ○ - A6W

Ⓐ Model No.
Ⓑ Port size
Ⓒ Port thread
Ⓓ Option
Ⓔ Display unit
Ⓕ Attachment

Code	Description	Ⓐ Model No. V1000	Ⓐ Model No. V3000
Ⓑ Port size			
6	Rc1/8	●	
8	Rc1/4	●	●
10	Rc3/8		●
15	Rc1/2		●
Ⓒ Port thread			
Blank	Rc thread	●	●
N	NPT thread	●	●
G	G thread	●	●
Ⓓ Option			
Blank	Standard flow (left → right)	●	●
X1	IN/OUT reverse flow (right → left)	●	●
Ⓔ Display unit			
Blank	MPa display, Rc thread	●	●
J1	MPa display, NPT, G thread	●	●
Ⓕ Other attachments			***1, *2**
Blank	None	●	●
A6*W	1/8 pipe adaptor set	●	
A8*W	1/4 pipe adaptor set	●	●
A10*W	3/8 pipe adaptor set	●	●
A15*W	1/2 pipe adaptor set		●
A20*W	3/4 pipe adaptor set		●
BW	C type bracket	●	●
S	Silencer	●	●
*** Adaptor thread**			
Blank	Rc thread	●	●
N	NPT thread	●	●
G	G thread	●	●

⚠ Precautions for model No. selection

*1: The pipe adaptor set and C type bracket cannot be used together.
*2: The joiner set is enclosed with the pipe adaptor set.

Specifications for rechargeable battery

(Catalog No. CC-1226A)

● Structure compatible with rechargeable battery manufacturing process

V3000 - ..... - P4*

⚠ Select the reverse regulator (R*100-W) or reverse filter regulator (W*100-W) when installing the V*000-W onto the primary side of the regulator or filter regulator.

Internal structure and parts list

● V1000-W

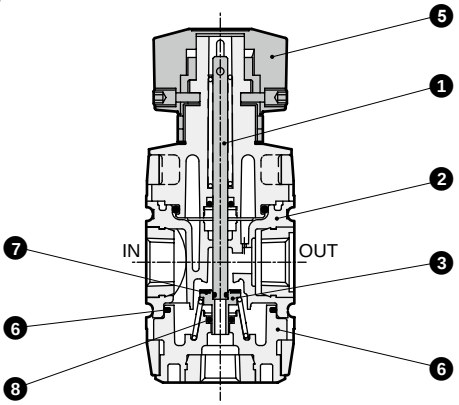

No.	Part name	Material
1	Spool	Steel
2	Body assembly	Polyamide resin, steel
3	Valve element	Copper alloy, nitrile rubber
4	Bottom plug	Polyamide resin, steel
5	Knob	Polyacetal resin
6	Packing	Nitrile rubber
7	O-ring	Nitrile rubber
8	O-ring	Nitrile rubber

● V3000-W

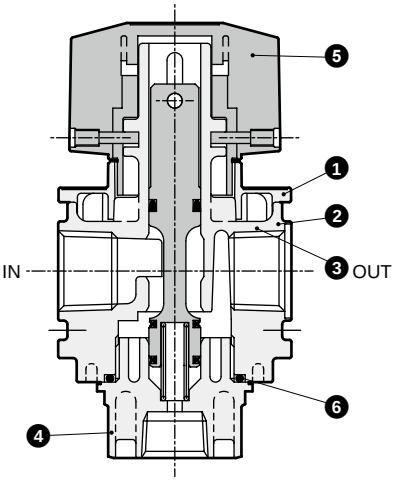

No.	Part name	Material
1	Plate cover	ABS resin
2	Body	Aluminum alloy die-casting
3	Spool assembly	Aluminum alloy urethane rubber resin
4	Bottom plug	PBT resin *1
5	Knob	Polyacetal resin
6	O-ring	Nitrile rubber

*1: The metal bottom plug is made to order.

Dimensions CAD

● V1000-W

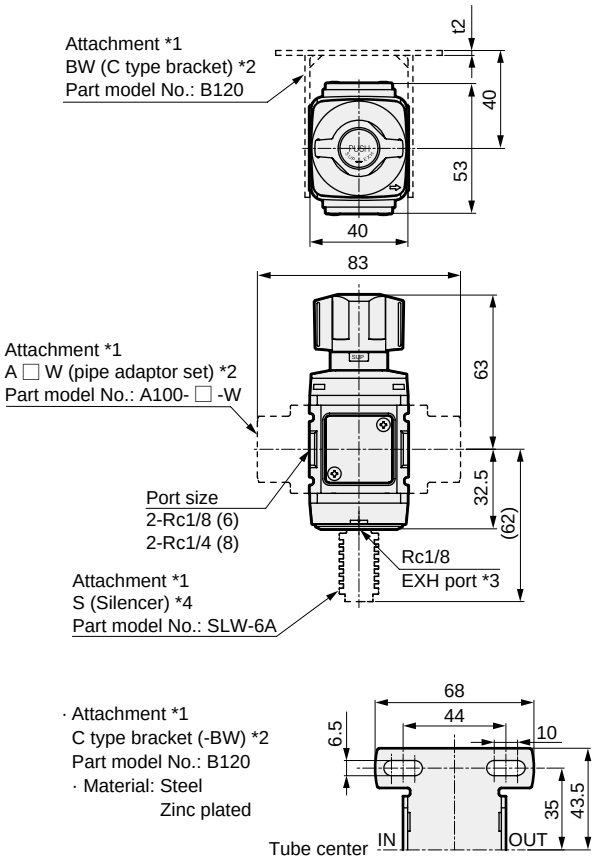

*1: The attachment is attached at delivery.
*2: The C type bracket and pipe adaptor set cannot be used together.
*3: The EXH port is dedicated for silencer mounting.
*4: The silencer is made of flame-resistant resin (UL94 Standard V-0 or equivalent). Note that the element is not made of flame-resistant resin.

● V3000-W

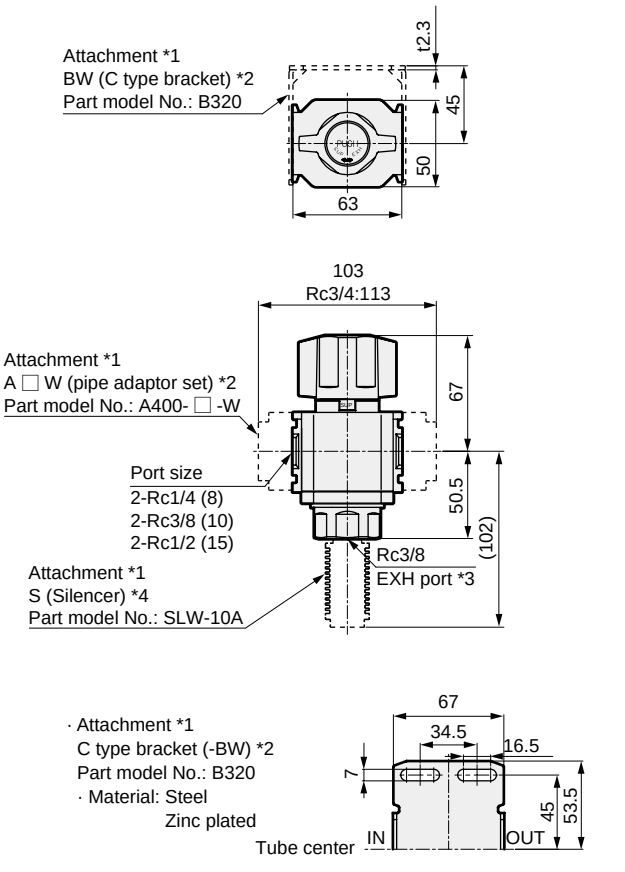

*1: The attachment is attached at delivery.
*2: The C type bracket and pipe adaptor set cannot be used together.
*3: The EXH port is dedicated for silencer mounting.
*4: The silencer is made of flame-resistant resin (UL94 Standard V-0 or equivalent). Note that the element is not made of flame-resistant resin.

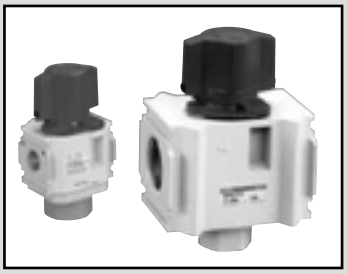

Residual pressure exhaust valve with keyhole (OSHA compliant) Standard White Series

V3010-W/V6010-W Series

Ideal for preventing accidents due to residual pressure in pneumatic lines.

● Port size: 1/4 to 1

JIS symbol 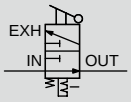

CAD RoHS

Specifications

Item		V3010-8-W	V3010-10-W	V3010-15-W	V6010-20-W	V6010-25-W
Working fluid		Compressed air				
Max. working pressure MPa		1.0 (≈150 psi, 10 bar)				
Proof pressure MPa		1.5 (≈220 psi, 15 bar)				
Ambient / fluid temperatures °C		5 (41°F) to 60 (140°F)				
Operation lever switching angle		90°				
Operating force	Pushing force N	80 or less				
	Torque N·m	2.5 or less				
Valve seat leakage cm^3/min(ANR)		10 or less				
External leakage cm^3/min(ANR)		10 or less				
Port size (Rc,NPT,G)	IN/OUT	1/4	3/8	1/2	Rc 3/4	Rc1
	EXH	3/8			Rc1/2	
Weight kg		0.3			0.8	
Eff. X-sectional area (mm^2)	IN→OUT	40	70	85	145	150
	OUT→EXH	40	50	50	105	110

Usage methods

● Regular use

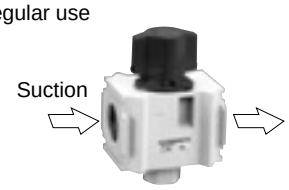

● During maintenance work
The component can be locked when residual pressure is released.

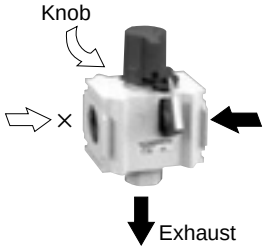

OSHA (Occupational Safety and Health Administration)

OSHA establishes the US safety standards for employees.

[Lockout/Tagout Regulation]
When conducting maintenance on machinery, close the air source with a shut-off valve and simultaneously discharge the residual pressure. (Residual pressure exhaust valve) If a third party inadvertently operates the valve during this operation and compressed air is applied, the cylinder, etc., could move suddenly and injure personnel. This standard states that, "All valves used for such purposes shall have a key or a structure which can be locked with a key."

How to order

● F.R.L.2000, 3000, 4000 series

V3010 - 8 ○ - W - ○ - ○ - A8W

● F.R.L.6000, 8000 series

V6010 - 20 ○ - W - ○ - ○ - A20W
(White type)

Ⓐ Model No.
Ⓑ Port size
Ⓒ Port thread
Ⓓ Option
Ⓔ Display unit
Ⓕ Attachment

Code	Description	Ⓐ Model No. V3010	Ⓐ Model No. V6010
Ⓑ Port size			
8	1/4	●	
10	3/8	●	
15	1/2	●	
20	3/4		●
25	1		●
Ⓒ Port thread			
Blank	Rc thread	●	●
N	NPT thread	●	●
G	G thread	●	●
Ⓓ Option			
Blank	None	●	●
X1	IN/OUT reverse flow (right → left)	●	●
Ⓔ Display unit			
Blank	MPa display, Rc thread	●	●
J1	MPa display, NPT, G thread	●	●
Ⓕ Other attachments		*1, *2	
Blank	None	●	●
A8W	1/4 pipe adaptor set	●	
A10W	3/8 pipe adaptor set	●	
A15W	1/2 pipe adaptor set	●	
A20W	3/4 pipe adaptor set	●	●
A25W	1 pipe adaptor set	●	●
A32W	1 1/4 pipe adaptor set		●
BW	C type bracket	●	●
S	Silencer	●	●
*** Adaptor thread**			
Blank	Rc thread	●	●
N	NPT thread	●	●
G	G thread	●	●

Precautions for model No. selection

*1: The pipe adaptor set and C type bracket cannot be used together.
*2: The joiner set is enclosed with the pipe adaptor set.

⚠ Select the reverse regulator (R*100-W) or reverse filter regulator (W*100-W) when installing the V*010-W onto the primary side of the regulator or filter regulator.

Option weight

* Add to the weight of the standard accessories. Unit: kg

Code	Attachment							
	A8*W	A10*W	A15*W	A20*W	A25*W	A32*W	BW	S
V3010	0.16	0.16	0.16	0.16	0.16		0.17	0.015
V6010				0.53	0.53	0.53	0.34	0.02

Specifications for rechargeable battery

(Catalog No. CC-1226A)

● Structure compatible with rechargeable battery manufacturing process

V3010
V6010 - ..... - P4*

Internal structure and parts list

● V3010-W

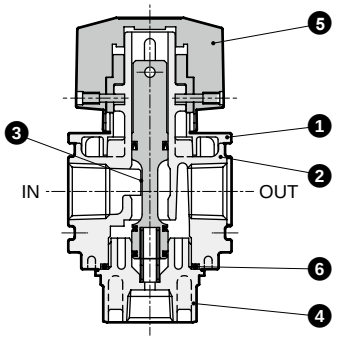

No.	Part name	Material
1	Plate cover	ABS resin (*2)
2	Body	Aluminum alloy die-casting
3	Spool assembly	Aluminum alloy urethane rubber resin
4	Bottom plug	PBT resin (*1) (*2)
5	Knob	Aluminum alloy die-casting
6	O-ring	Nitrile rubber

*1: The metal bottom plug is made to order.
*2: Flame-resistant resin equivalent to UL94 standard V-0

● V6010-W

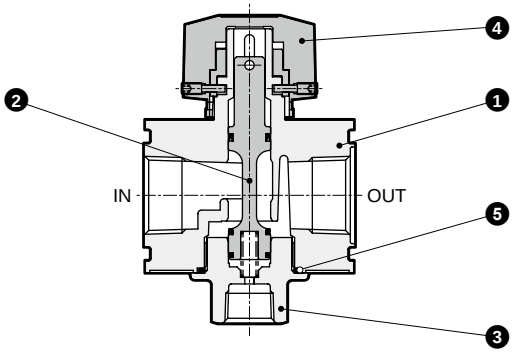

No.	Part name	Material
1	Body	Aluminum alloy die-casting
2	Spool assembly	Aluminum alloy, hydrogenated nitrile rubber
3	Bottom plug	Aluminum alloy die-casting
4	Knob	Aluminum alloy die-casting
5	O-ring	Nitrile rubber

Dimensions (V3010-W)

CAD

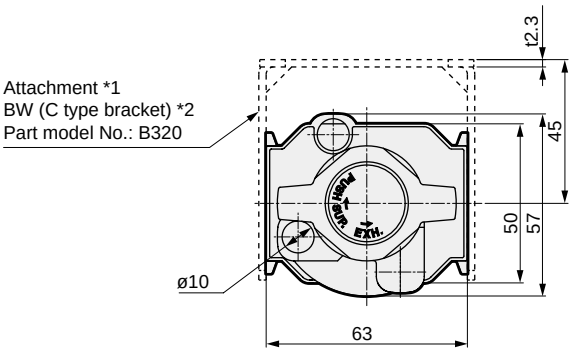

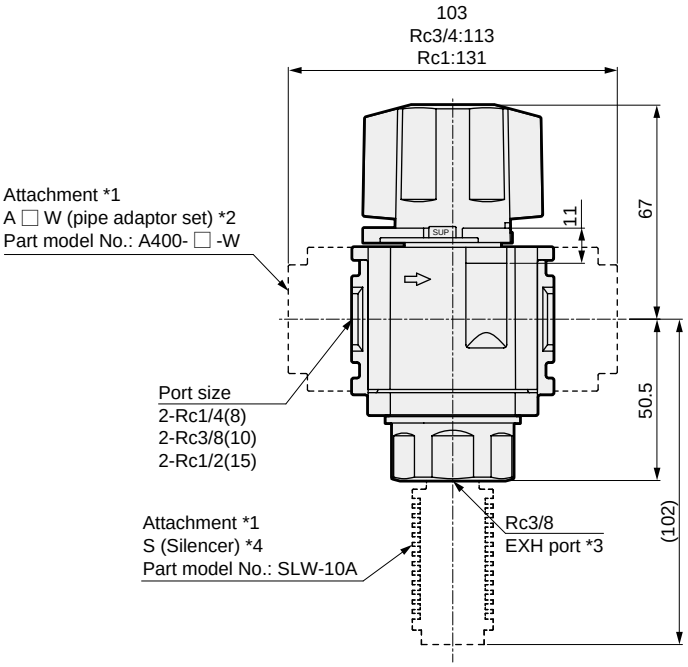

· Attachment *1
C type bracket (-BW) *2
Part model No.: B320
· Material: Steel
Zinc plated

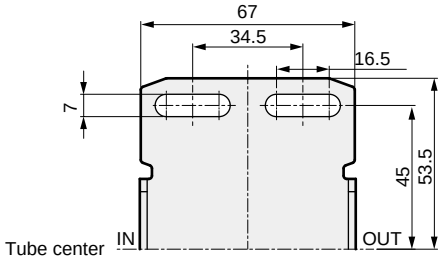

*1: The attachment is attached at delivery.
*2: The C type bracket and pipe adaptor set cannot be used together.
*3: The EXH port is dedicated for silencer mounting.
*4: The silencer is made of flame-resistant resin (UL94 Standard V-0 or equivalent).
Note that the element is not made of flame-resistant resin.

Dimensions (V6010-W)

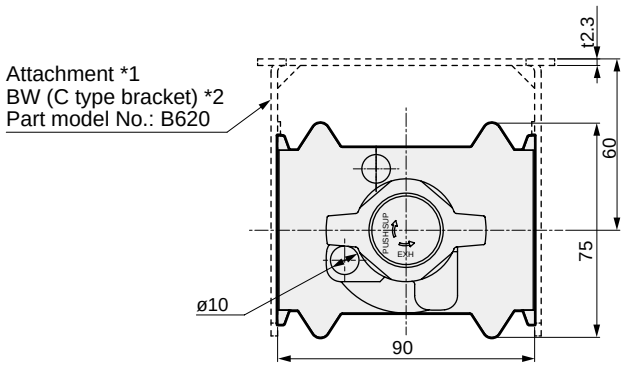

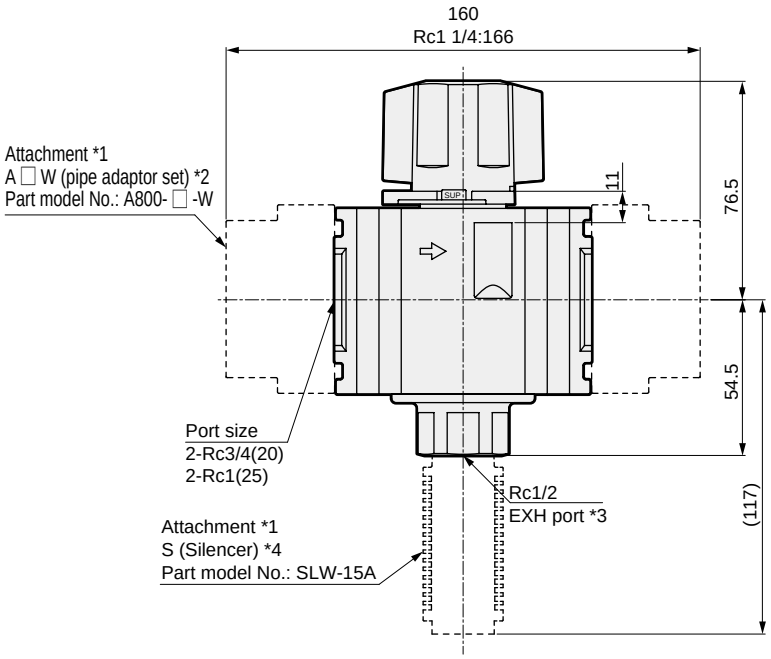

· Attachment *1
C type bracket (-BW) *2
Part model No.: B620
· Material: Steel
Zinc plated

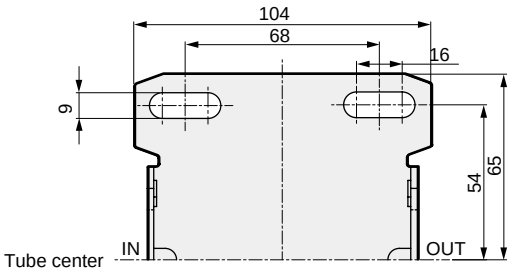

*1: The attachment is attached at delivery.
*2: The C type bracket and pipe adaptor set cannot be used together.
*3: The EXH port is dedicated for silencer mounting.
*4: The silencer is made of flame-resistant resin (UL94 Standard V-0 or equivalent).
Note that the element is not made of flame-resistant resin.

Residual pressure exhaust valve (V3000-W, V3010-W) optional parts diagram

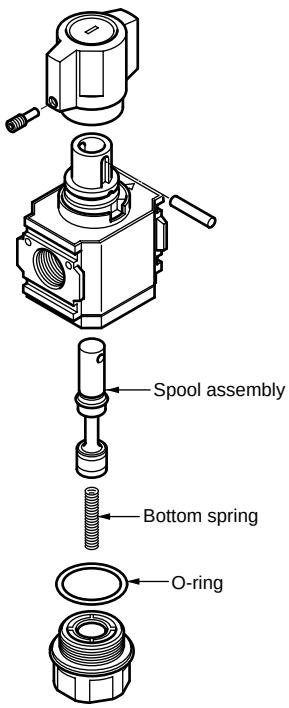

Spool assembly

(Set of spool assembly, bottom spring)

Model	Spool assembly model No.
V3000,V3010	V3000-SPOOL



Quick valve

2QV/3QV Series

● Port size: Push-in fitting ø4, ø6, ø8, ø10, ø12, R1/8 to R1/2

JIS symbol

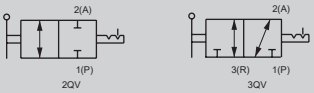

RoHS CAD

Features

● Straight flow path and large effective sectional area.
● Flame-resistant resin has been adopted as a standard material. (UL94 Standards V-0 equivalent)
● Manifold enabled by optional bracket.
● 2- and 3-port valves are available.

Specifications

Item	2QV/3QV
Working fluid	Air
Max. working pressure MPa	1.0 (≈150 psi, 10 bar)
Min. working pressure kPa	-100 (≈15 psi, 1 bar) (*1)
Proof pressure MPa	1.5 (≈220 psi, 15 bar)
Fluid temperature °C	0 (32°F) to 60 (140°F)
Ambient temperature °C	0 (32°F) to 60 (140°F)
Switching angle °	90
Tube used	Soft nylon tube (tube F-15**) Urethane tube (tube U-95**, NU-**)
Mounting orientation	Arbitrary

*1: When using urethane tube (U-95**, NU-**) at vacuum, use an insert ring.
*2: Lubricant is used, so oil-prohibited specification is not available.

Operational explanation

● 2-port valve (2QV Series)

[Closed state] [Open state]

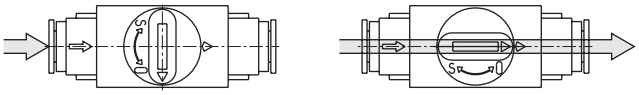

● 3-port valve (3QV Series)

[Exhaust status] [Air supplied status]

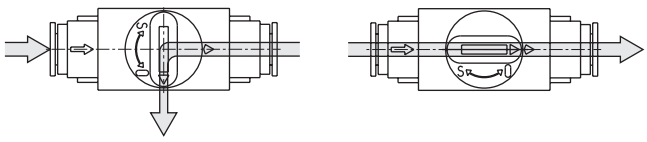

Applications

● Residual pressure exhaust valve in air cylinder circuit

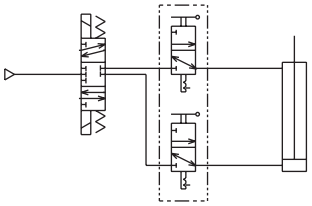

Quick valve (3QV)

● Stop valve in air blow circuit

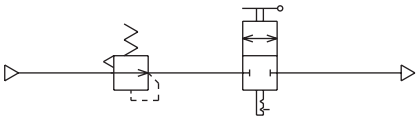

Quick valve (2QV)

Clean-room specifications

(Catalog No. CB-033SA)

● Anti-dust generation structure for use in cleanrooms

2QV- ..... **-P70**

Specifications for rechargeable battery

(Catalog No. CC-1226A)

● Structure compatible with rechargeable battery manufacturing process

2QV- ..... **-P4**

How to order

● Quick valve

2 QV - 04-04

Ⓐ Valve

Ⓑ Port size (PPo-)-(APo-)

	Code	Description	Bracket *
	Ⓐ Valve type		
	2	2-way valve	
	3	3-way valve	
	Ⓑ Port size (PPo-)-(APo-)		
		IN side - OUT side	
Standard	**04−04**	Push-in fitting ø4 - Push-in fitting ø4	**2QV-P1**
Standard	**06−06**	Push-in fitting ø6 - Push-in fitting ø6	
Standard	**08S-08S**	Push-in fitting ø8 - Push-in fitting ø8	
Standard	**08−08**	Push-in fitting ø8 - Push-in fitting ø8	**2QV-P2**
Standard	**10−10**	Push-in fitting ø10 - Push-in fitting ø10	
Standard	**12−12**	Push-in fitting ø12 - Push-in fitting ø12	
Option	**6A-04**	R1/8 - Push-in fitting φ4	**2QV-P1**
Option	**6A-06**	R1/8 - Push-in fitting φ6	
Option	**8A-06**	R1/4 - Push-in fitting φ6	
Option	**8A-08S**	R1/4 - Push-in fitting φ8	
Option	**10A-08**	R3/8 - Push-in fitting φ8	**2QV-P2**
Option	**10A-10**	R3/8 -Push-in fittingø10	
Option	**15A-10**	R1/2 -Push-in fitting ø10	
Option	**15A-12**	R1/2 -Push-in fitting ø12	
Option	**04-6A**	Push-in fitting φ4 - R1/8	**2QV-P1**
Option	**06-6A**	Push-in fitting φ6 - R1/8	
Option	**06-8A**	Push-in fitting φ6 - R1/4	
Option	**08S-8A**	Push-in fitting φ8 - R1/4	
Option	**08-10A**	Push-in fitting φ8 - R3/8	**2QV-P2**
Option	**10-10A**	Push-in fittingø10- R3/8	
Option	**10-15A**	Push-in fitting ø10- R1/2	
Option	**12-15A**	Push-in fittingø12- R1/2	
Option	**6A-6A**	R1/8 - R1/8	**2QV-P1**
Option	**8A-8A**	R1/4 - R1/4	
Option	**10A-10A**	R3/8 - R3/8	**2QV-P2**
Option	**15A-15A**	R1/2 - R1/2	

* For 2- and 3-port valves, the bracket is common.
* Note that this may differ according to the body size.

⚠ Select the reverse regulator (R*100) or reverse filter regulator (W*100) when installing the 3QV onto the primary side of the regulator or filter regulator.

Internal structure and parts list

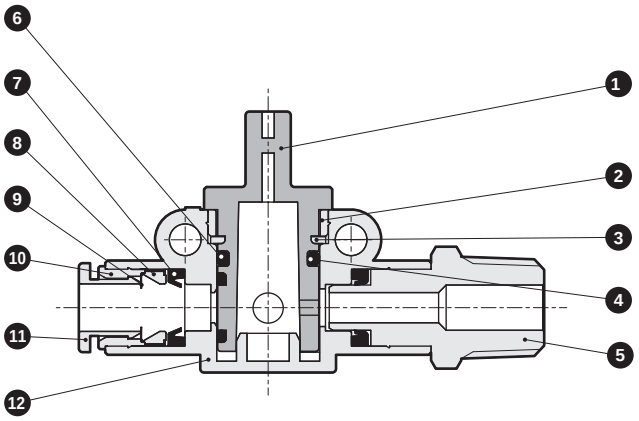

Parts list

Part No.	Part name	Material
1	Rotary shaft	PBT (UL94V-0 or equivalent)
2	Stopper	Brass (electroless nickeling treatment) *1
		Stainless steel *2
3	Ring	Steel
4	O-ring	Nitrile rubber
5	Nipple	Brass (electroless nickeling treatment)
6	O-ring	Nitrile rubber
7	Packing	Nitrile rubber
8	Chuck holder	polyether sulfone
9	Chuck	Stainless steel
10	Outer ring	Brass (electroless nickeling treatment)
11	Push ring	PBT (UL94V-0 or equivalent)
12	Body	PBT (UL94V-0 or equivalent)

*1: The "A" dimensions in the outline drawing apply to the "18" model material.
*2: The "A" dimensions in the outline drawing apply to the "22" model material.

Dimensions

● Port size
· P-port (push-in fitting)/A-port (push-in fitting)

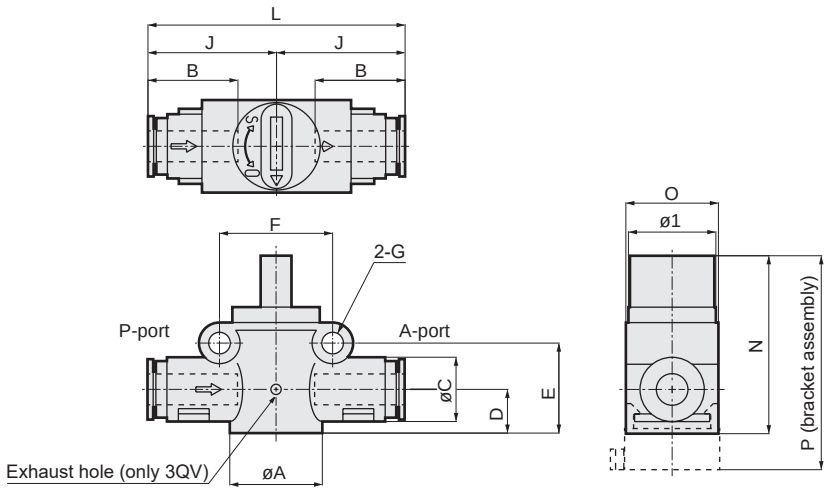

Compatible tube O.D. (mm)		Model No.	A	B	C	D	E	F	G	I	J	L	N	O	P	Weight	Eff. X-sectional area (mm²)	
P-port	A-port															(g)	P→A	A→R
ø4	ø4	2/3QV-04-04	18	16	12.5	8.5	17.5	22	4.2	17	25	50	34.5	18	41.5	20	4.2	1.8
ø6	ø6	2/3QV-06-06		17.5												21	9.3	
ø8	ø8	2/3QV-08S-08S		19	14.5						26.5	53				23	10.2	
ø8	ø8	2/3QV-08-08	22	19	17.5	10.7	22.8	26.5	4.2	17	31.5	63	39.8	22	46.8	34	17.5	4.0
ø10	ø10	2/3QV-10-10		21.5												35	22.5	
ø12	ø12	2/3QV-12-12		23	20						33	66				38	22.5	

* Tolerance of effective cross-sectional area is ±10%.

● Port size
P-port (male thread)/A-port (push-in fitting)

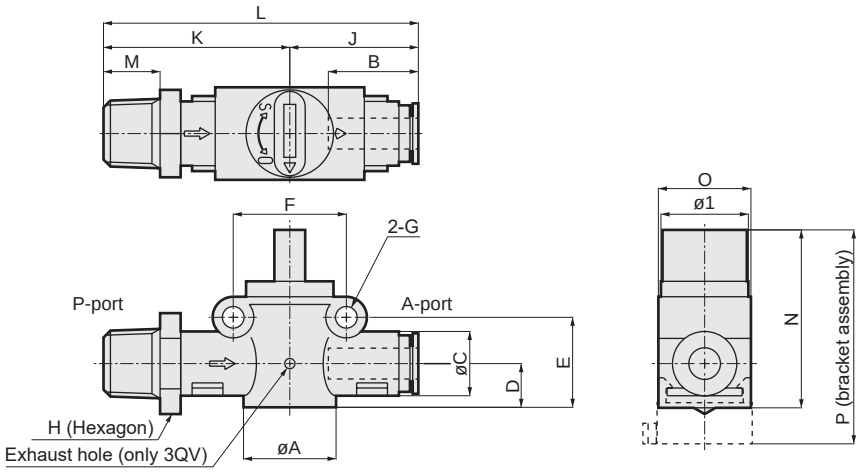

Port thread R	Compatible tube O.D. (mm)	Model No.	A	B	C	D	E	F	G	H	I	J	K	L	M	N	O	P	Weight	Eff. X-sectional area (mm²)	
P-port	A-port																		(g)	P→A	A→R
1/8	ø4	2/3QV-6A-04	18	16	12.5	8.5	17.5	22	4.2	14	17	25	33.5	58.5	8	34.5	18	41.5	26	4.2	1.8
1/8	ø6	2/3QV-6A-06		17.5															32	9.3	
1/4	ø6	2/3QV-8A-06								17			38	63	11				35	9.3	
1/4	ø8	2/3QV-8A-08S		19	14.5							26.5		64.5					40	10.2	
3/8	ø8	2/3QV-10A-08	22	19	17.5	10.7	22.8	26.5	4.2	17	17	31.5	44.5	76	12	39.8	22	46.8	57	16.3	4.0
3/8	ø10	2/3QV-10A-10		21.5						19									63	21.4	
1/2	ø10	2/3QV-15A-10								22			47.5	79	15				76	21.4	
1/2	ø12	2/3QV-15A-12		23	20.0							33	49	82					85	21.4	

* Tolerance of effective cross-sectional area is ±10%.

Dimensions

● Port size
· P-port (push-in fitting)/A-port (male thread)

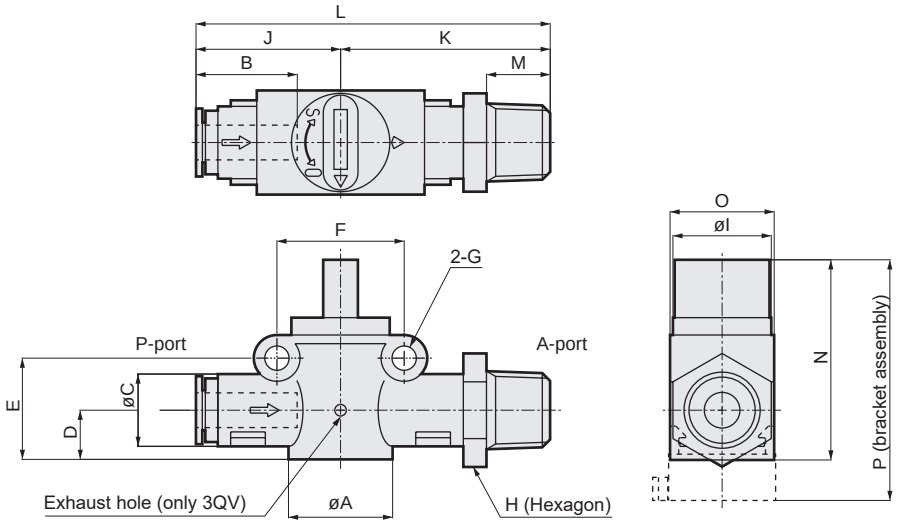

Compatible tube O.D. (mm)	Port thread R	Model No.	A	B	C	D	E	F	G	H	I	J	K	L	M	N	O	P	Weight	Eff. X-sectional area (mm²)	
P-port	A-port																		(g)	P→A	A→R
ø4	1/8	2/3 QV-04-6A	18	16	12.5	8.5	17.5	22	4.2	14	17	25	33.5	58.5	8	34.5	18	41.5	26	3.5	1.8
ø6	1/8	2/3 QV-06-6A		17.5															32	9.3	
ø6	1/4	2/3 QV-06-8A								17			38	63	11				35	9.3	
ø8	1/4	2/3 QV-08S-8A		19	14.5							26.5		64.5					40	10.2	
ø8	3/8	2/3 QV-08-10A	22	19	17.5	10.7	22.8	26.5	4.2	17	17	31.5	44.5	76	12	39.8	22	46.8	57	15.8	4.0
ø10	3/8	2/3 QV-10-10A		21.5						19									63	21.4	
ø10	1/2	2/3 QV-10-15A								22			47.5	79	15				76	21.4	
ø12	1/2	2/3 QV-12-15A		23	20.0							33	49	82					85	21.4	

* Tolerance of effective cross-sectional area is ±10%.

● Port size
· P-port (male thread)/A-port (male thread)

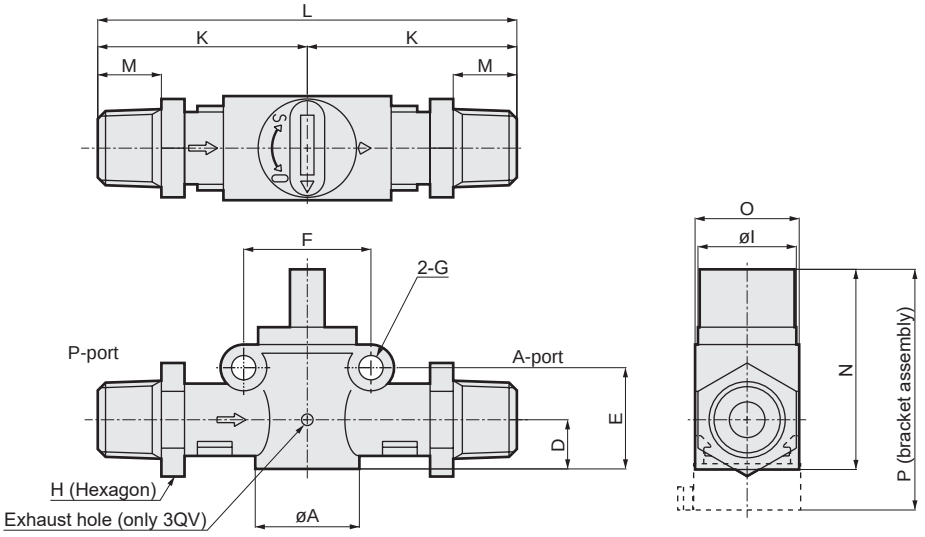

Port thread R		Model No.	A	D	E	F	G	H	I	K	L	M	N	O	P	Weight	Eff. X-sectional area (mm²)	
P-port	A-port															(g)	P→A	A→R
1/8	1/8	2/3 QV-6A-6A	18	8.5	17.5	22	4.2	14	17	33.5	67	8	34.5	18	41.5	42	9.5	1.8
1/4	1/4	2/3 QV-8A-8A						17		38	76	11				48	9.5	
3/8	3/8	2/3 QV-10A-10A	22	10.7	22.8	26.5	4.2	19	17	44.5	89	12	39.8	22	46.8	90	21.4	4.0
1/2	1/2	2/3 QV-15A-15A						22		47.5	95	15				116	21.4	

* Tolerance of effective cross-sectional area is ±10%.

Dimensions

● Dedicated bracket

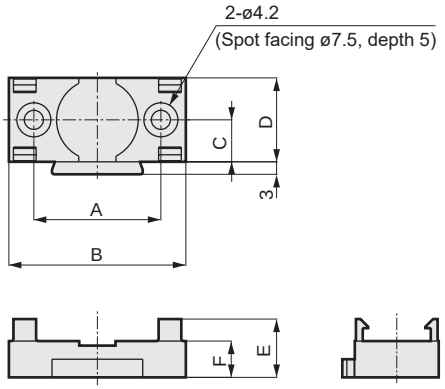

● Mounting pitch dimension for manifold

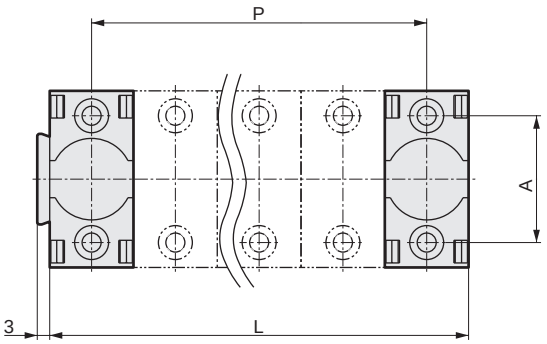

Model No.	A	B	C	D	E	F	P	L	Subject A dimension	Weight g
2QV-P1	28	39	9.25	18.5	13	8	Dx(n-1)	D x n	18	5.4
2QV-P2	32	44	11.25	22.5	12.5	8			22	7.2

n = Station No.

Introduction of made-to-order products

A quick valve with air lamp is available made to order. Contact CKD for details.
Note: Note that the ø12 diameter is not available.

Specifications

Item	Air lamp
Working fluid	Air
Working pressure MPa	0.05 to 0.8
Fluid temperature °C	0 to 60
Ambient temperature °C	0 to 60
Display color	Red, green

Applications
· Cylinder residual pressure exhaust

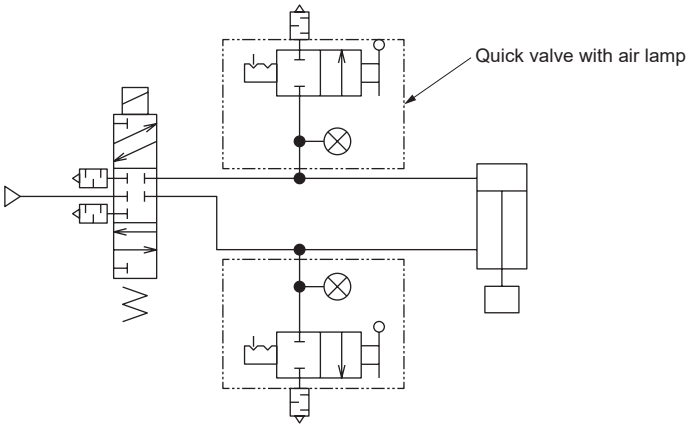

Example of assembly

● When using 2QV-06-06 with air lamp

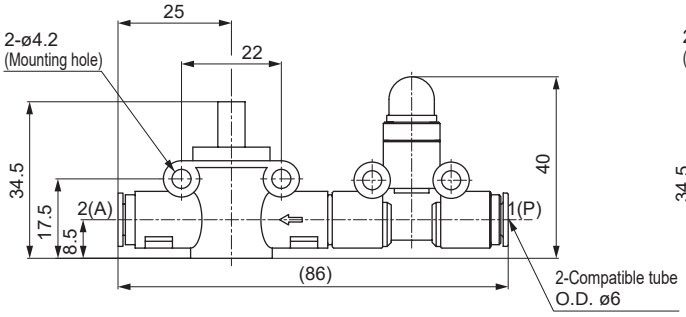

● When using 2QV-08S-08S with air lamp

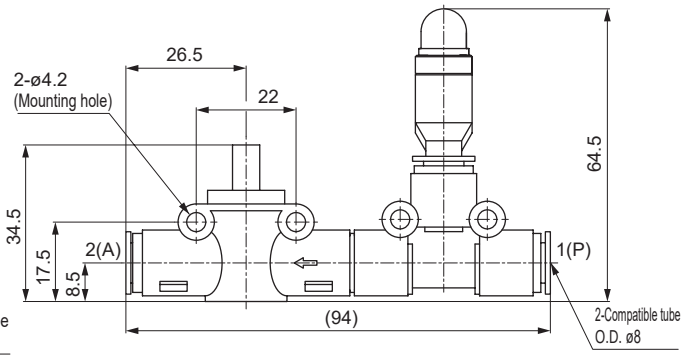

● Types 3QV-06 to 10 with air lamp are also available. Contact CKD for details.

Product-specific cautions: Quick valve 2QV/3QV Series

Design/selection

⚠WARNING

- Use the product within specifications.
  Use with fluid other than compressed air or at a pressure or temperature exceeding the specifications could result in rupture, tube dislocation, or leakage.

- Avoid installing this product outdoors or where it is exposed to direct sunlight.

⚠CAUTION

- Confirm before use that the product will withstand the working environment.
  - This product cannot be used in environments where functional obstacles could occur. Such environments include high temperatures, chemical atmospheres, or where chemical liquids, vibration, moisture, dripping water, or gases are present. Environments where ozone is generated. Outdoors or where the product could be subject to direct sunlight; or where coolant spatter could come in contact or where static electricity could pose a problem.
- Confirm whether PTFE can be used.
  - The sealant contains PTFE (tetrafluoroethylene resin) powder. Check that this poses no problem during use.

- Consult with CKD if ozone is generated in the supplied air. (Ozone-proof products are available.)

- Avoid using this product in a hot humid place, outdoors or where it is subject to direct sunlight.

Mounting, installation and adjustment

⚠WARNING

- Securely insert the tube until it contacts the fitting tube end, and check that it does not come off the fitting.

- Stop air flow and confirm that there is no residual pressure before replacing the tube.

Piping

⚠CAUTION

- Observe the following precautions when using nylon tubes or urethane tubes for piping material.
  - Use the designated tube and CKD plastic plug (GWP Series). Do not use a metal plug as doing so may cause problems.
    Tube outer diameter accuracy
    · Polyamide tube.....Within ±0.1 mm
    · Polyurethane tube
    (ø6 or less).....Within ±0.1 mm
    (ø8 up).....Within $^{+0.1}_{-0.15}$ mm
    Use a tube with hardness of 92° or more. If a tube that does not satisfy the diameter accuracy or hardness is used, the chucking force may decrease, the tube may come off or be difficult to insert.
    Contact CKD when using a non-designated tube or plug.
  - Cut the tube with a dedicated cutter and always at a right angle.
  - Use the tubing so that it does not become worn or damaged. Tubing could collapse or rupture.
  - A used tube could be deteriorated or deformed and so always use a new tube.
  - Do not let the tube directly contact other surfaces, as there is a risk of wear or damage.

- Do not use this product for applications involving constant rotation or oscillations, or in which tubes move violently.

- Use the tubing so that it is within the min. bending radius and long enough to avoid sharp bends.
  - Consider changes in tubing length caused by pressure when tubing is connected, and provide sufficient length within the min. tube bending radius.

- Always flush just before piping pneumatic components.
  - Any foreign matter that has entered during piping must not enter the pneumatic components. Remove all swarf and foreign debris generated during piping and tube insertion before use.

- When supplying compressed air after connecting pipes, do not suddenly apply high pressure.
  - The pipe connection could dislocate, causing the pipe tube to fly out, leading to accidents.

- After connecting pipings, always check all pipe connections for air leaks before supplying compressed air.
  - Apply a leakage detection agent on pipe connections with a brush, and check for air leaks.

- Handling push-in fittings and tubes
  - Refer to fitting and tube warnings and cautions (pages 910 to 913) for handling push-in fittings and tubes.

Mounting, installation and adjustment

⚠CAUTION

■ Use appropriate torque to tighten the pipes when connecting them.

- The purpose is to prevent air leakage and damage to bolts. First tighten the bolts by hand to ensure that the threads are not damaged, then use a tool.
  Check that the tool's hexagon face and wrench are the correct size.
  [Reference value]

Port thread	Tightening torque N·m
R1/8	3 to 5
R1/4	6 to 8
R3/8	13 to 15
R1/2	16 to 18

* The above values apply when partner threads are JIS B 0203 piping tapered female threads (material C3604BD).

■ Connect piping so that connections are not dislocated by equipment movement, vibration, tension, etc.

- Control of actuator speed will be disabled if piping on the exhaust side of the pneumatic circuit is disengaged.
- When using the chuck holding mechanism, the chuck may be released, creating a hazardous state.
- Confirm that the tube has been inserted properly, and make sure that there is no tension during use.
  The tube could be dislocated or damaged if there is any tension.

■ Make sure that there is no torsion, tension or moment load applied to the fitting or the tube.

■ Do not tighten while pressure is applied.

■ When using a urethane rubber tube (U-95□□, NU-□□) for vacuum, use an insert ring.

■ If the manifold is installed with a focus on space-saving, manual operation may be difficult.
Operate by inserting a screwdriver, etc., into the slot on the top of the knob.

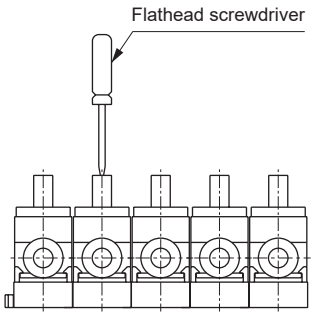

■ If manifolds are installed with a priority on manual operation, valves can be operated easily by installing them with spaces in between.

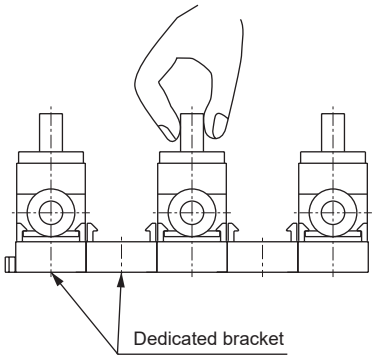

Use/maintenance

⚠CAUTION

■ Operating angle of this product is 90˚.
Do not turn the product more than 90˚.

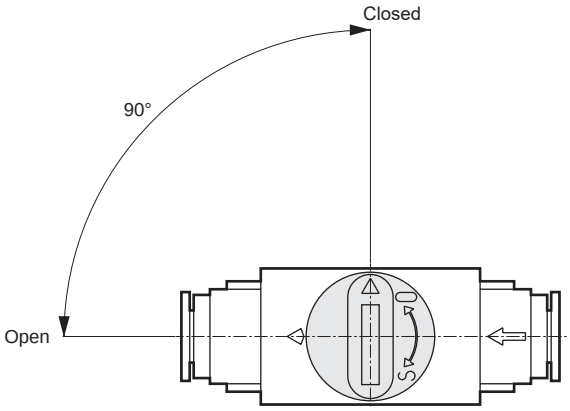

■ The dedicated bracket's hooks can be damaged by external force. Use with the proper means.

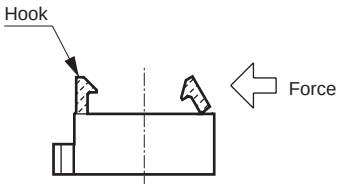

■ How to use bracket

(1) Fix the bracket before use. To mount, insert the product at a slant into the bracket, and then fit into hooks.

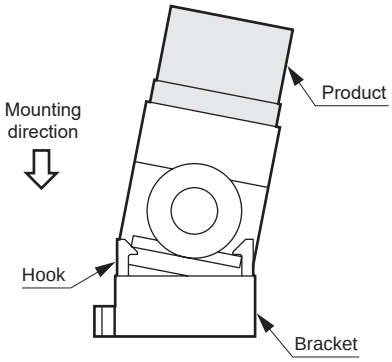

(2) To remove the product, tilt it slightly to the side, and release one hook.

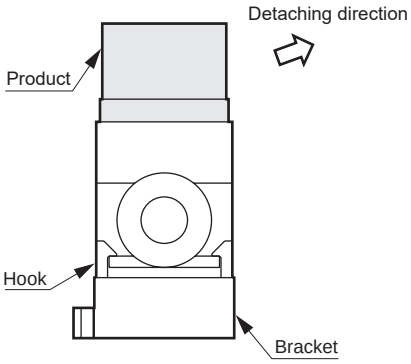

(3) When mounting the manifold, insert the bracket projection into the other bracket's groove.

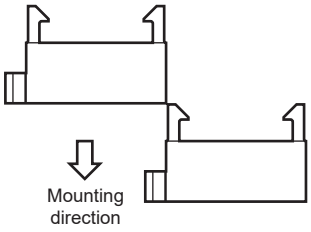

Industry's smallest class residual pressure exhaust

Uses a spool valve with main valve position monitoring function

- With a safety standard compliant limit switch, the consistency between the input signal and valve operation can be confirmed.
- With a spool valve, it remains compact while providing a large flow rate.

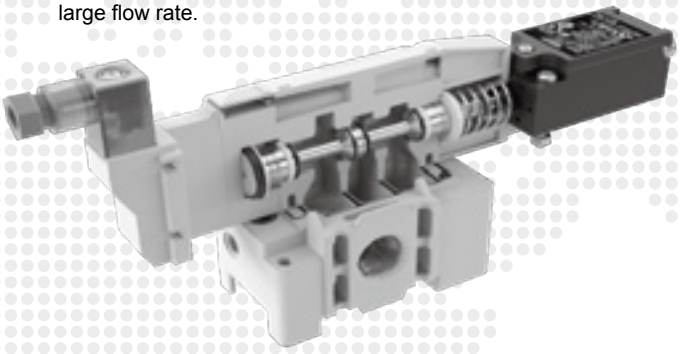

Sonic conductance

Large flow rate supported
(P→A)
C = 13 [dm³/(s·bar)] (1 station)
C = 10 [dm³/(s·bar)] (2 stations)

Interface dimensions are the industry's smallest class

34% smaller compared to conventional products (2 stations).

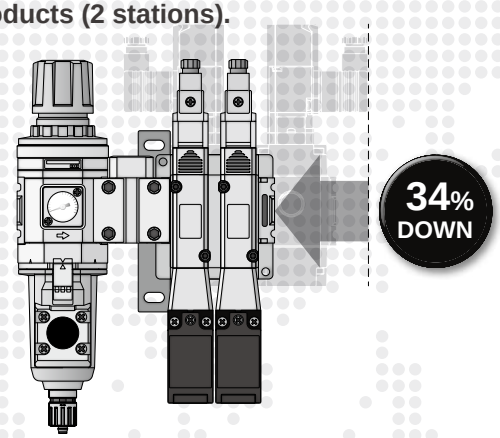

Piping space reduced

Modular connection with F.R.L. devices enables piping space reduction.

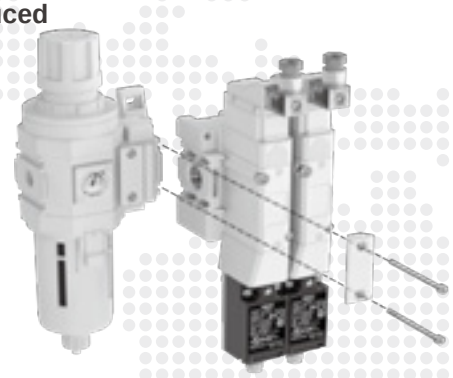

Easy installation

Bolt installation possible

Bolt installation is possible using the through holes in the base..

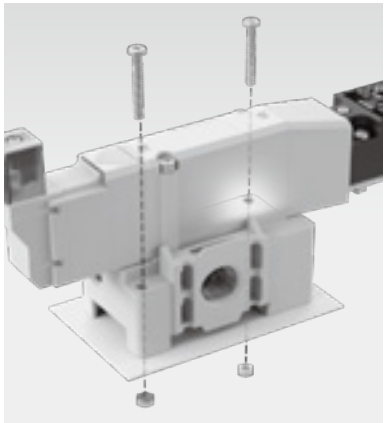

Prevents manual misoperation

Protective cover

The manual override is equipped with a protective cover. When locked for manual operation, the protective cover will not close. (Manual override of non-locking/locking common)

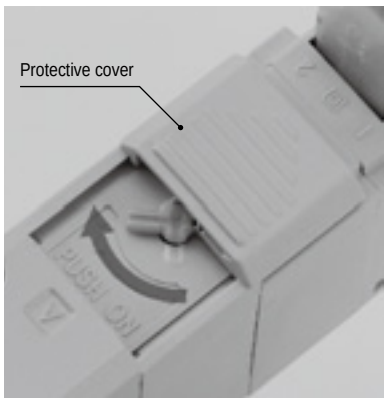

Prevents problems with foreign matter

Mesh filter equipped as standard

Mesh filter is equipped as standard on the P port.



Internal pilot filter equipped as standard

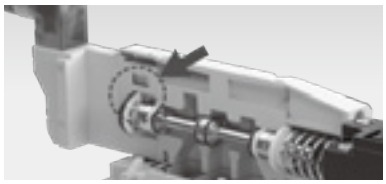

valve, certified for safety standard ISO 13849-1.

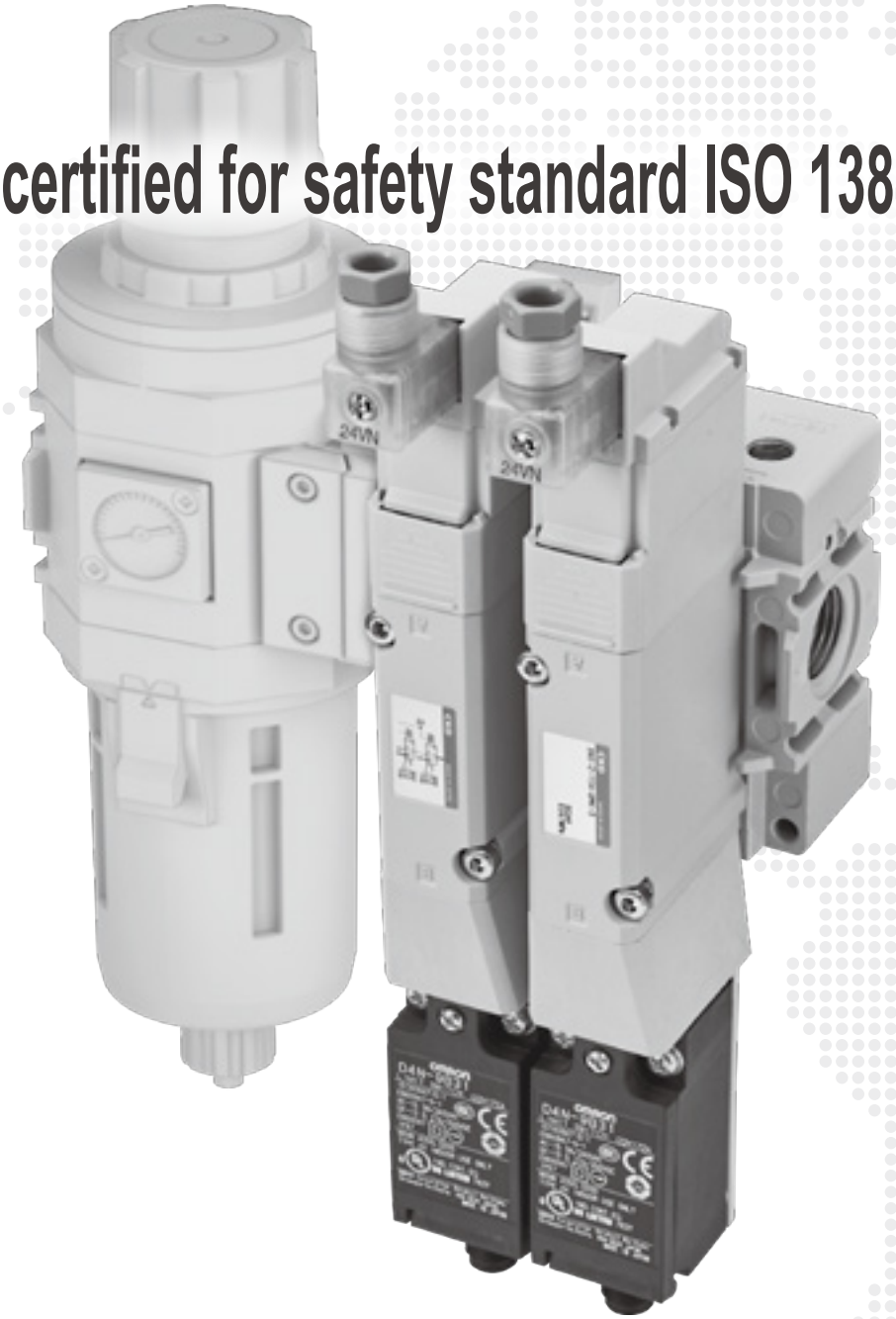

Certified for safety standard ISO 13849-1

Category 2 compliant

- Spool position detection enables safety function checking

Spool valve position can be detected with the safety limit switch.
Confirmation of the consistency of valve energization and open/closed states support safety function checks.

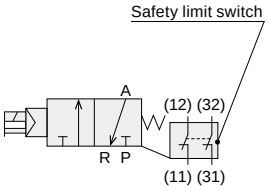

Category 3, 4 compliant

- Spool position detection enables safety function checking
- Residual pressure removal can be made redundant

With 2 residual pressure exhaust valves, even if one breaks down the other discharges residual pressure. Individual malfunctions will not lead to loss of the safety function.

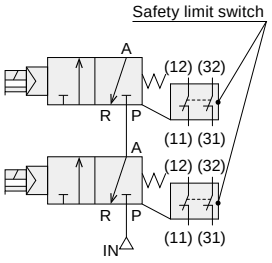

What is ISO 13849-1?

ISO 13849-1 is an international safety standard using objective judgment methods to promote risk reduction measures which protect people from risks regarding machinery (equipment).
This standard is applied to systems relating to machine safety, and is applied to hardware such as solenoid valves, cylinders, etc.

Note) The use of this ISO 13849-1-compliant product will ease your path to equipment certification.
However, this product alone does not constitute a safety control system. Be sure to carry out a risk assessment of your equipment and design a system compatible with safety standards.

* Contact CKD for details on reliability data (B10).

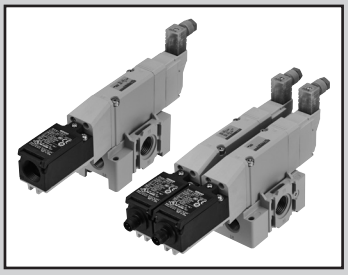

Residual pressure exhaust valve with spool position detection

SNS Series

● Port size: Rc3/8, Rc1/2, G1/2, NPT3/8, NPT1/2

Common specifications

1 MPa ≈ 145.0 psi, 1 MPa = 10 bar

Item	Description
Valve type and operation	Pilot operated soft spool valve
Working fluid	Compressed air
Max. working pressure MPa	0.7 (≈101 psi, 7 bar)
Min. working pressure	0.2 (≈29 psi, 2 bar) (For internal pilot specifications)
MPa	0 (≈0 psi, 0 bar) (For external pilot specifications)
External pilot pressure MPa	0.2 (≈29 psi, 2 bar) to 0.7 (≈101 psi, 7 bar)
Proof pressure MPa	1.05 (≈152 psi, 10 bar)
Ambient temperature °C	-5 (23°F) to 55 (131°F) (no freezing)
Fluid temperature °C	5 (41°F) to 55 (131°F)
Manual override	Non-locking/locking common (standard)
Lubrication *1	Not required
Degree of protection *2	Dust proof/jet proof (IP65)
Vibration resistance m/s^2	50 or less
Shock resistance m/s^2	300 or less
Atmosphere	Cannot be used in corrosive gas environments
Maximum operating frequency	30 cycles/min.
Minimum operating frequency	1 cycle/week

Electrical specifications

Item	Description
Rated voltage V	24 DC
Voltage fluctuation range	±10%
Holding current A	0.042
Power consumption W	1.0
Thermal class	B
Surge suppressor	Varistor
Indicator	LED

Individual specifications

Item		Description
Port size	Port P/A	Rc3/8, Rc1/2, G1/2, NPT3/8, NPT1/2
	Port R	Rc3/8, G3/8, NPT3/8

*1. Use turbine oil Class 1 ISO VG32 for lubrication. Excessive or intermittent lubrication results in unstable operation.
*2. Use the specified outer diameter of the cord and tightening torque for fixing. Do not use this product in environments where it will be constantly exposed to water or oil.
IP65 (IEC60529 [IEC529:1989-11]) standards are applied to the test.
*3. For the working pressure, refer to page 203 flow characteristics.
*4. Pilot exhaust is an atmospheric release type. Ports have not been machined.

JIS symbol

● 1 station

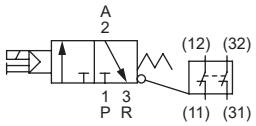

● 2 stations

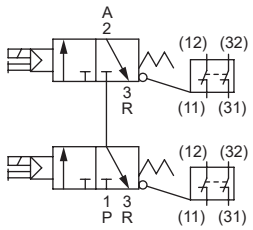

Weight

Unit: kg

Item			Weight
1 station	With safety limit switch	Pg13.5	0.7
		M12-4P connector	0.7
	Without switch		0.6
2 stations	With safety limit switch	Pg13.5	1.2
		M12-4P connector	1.2

Flow characteristics

Model No.	Station No.	P→A	A→R
		C[dm^3/(s·bar)]	
SNS	1 station	13	14
	2 stations	10	14

*1: Effective cross-sectional area S and sonic conductance C are converted as S ≈ 5.0 × C.
*2: Values of flow characteristics are for Rc1/2 port size.

Limit switch specifications

Item	Limit switch specifications	
Manufacturer model	D4N-1B31 (OMRON)	D4N-9B31 (OMRON)
Terminal	Pg13.5	M12-4P connector
Contact resistance	25 mΩ or less	
Minimum applicable load	5 VDC 1 mA resistance load	
Rated insulation voltage V	300	
Insulation resistance MΩ	100	
Electric shock protection class	Class II	
Pollution degree (working environment)	3 (EN60947-5-1)	
Conditional short-circuit current A	100	

* Refer to the manufacturer's catalog for details.

How to order

SNS - 2 - 15A - M B L K S - 3

Model No.

Code	Description
A Station No.	
1	1 station
2	2 stations
B Port size	
10A	Rc3/8
15A	Rc1/2
15G	G1/2
10N	NPT3/8
15N	NPT1/2
C Manual override	
Blank	Manual override of non-locking/locking common
M	Manual override of non-locking
D Electrical connections	
B	DIN terminal box (Pg7) with surge suppressor/lamp
BN	DIN terminal box (Pg7) (without terminal box) With surge suppressor
E Safety limit switch	
Blank	Without switch (*1)
L	Pg13.5 (D4N-1B31: OMRON)
M	M12-4P connector (D4N-9B31: OMRON)
F Pilot operated	
Blank	Internal pilot
K	External pilot
G Flow direction option	
Blank	Standard flow (left → right)
X1	Reverse flow (right → left) (*2)
H Silencer	
Blank	None
S	Silencer (SLW-10L) included (*3)
I Voltage	
3	24 VDC

Precautions for model No. selection

*1: Available only when A Station No. is "1".
* Not compliant with safety standards.
*2: Available only when A Station No. is "1".
*3: Available only when B Port size is 10A or 15A.

[Example of model No.]

SNS-2-15A-MBLKS-3

Model No.	: SNS
A Station No.	: 2 stations
B Port size	: Rc1/2
C Manual override	: Manual override of non-locking
D Electrical connections	: DIN terminal box (Pg7) with surge suppressor/lamp
E Safety limit switch	: Pg13.5 (D4N-1B31: OMRON)
F Pilot operated	: External pilot
G Flow direction option	: Standard flow (left → right)
H Silencer	: Silencer (SLW-10L) included
I Voltage	: 24 VDC

Internal structure diagram and parts list

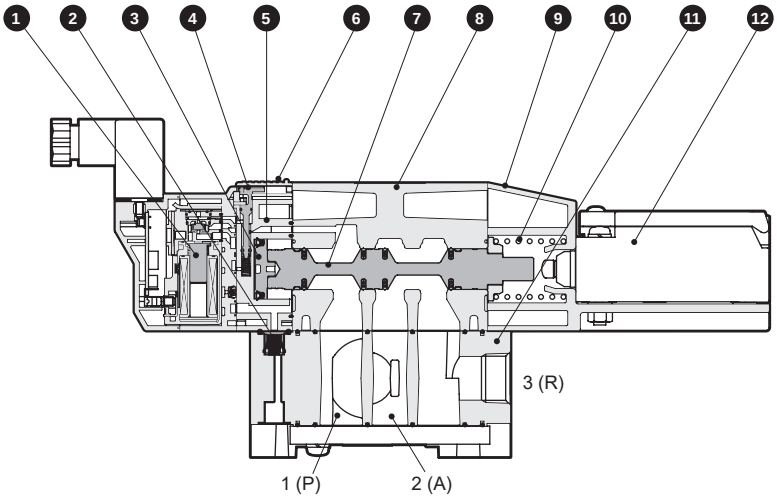

Parts list

No.	Part name	Material
1	Coil assembly	-
2	Check valve	Hydrogenated nitrile rubber
3	Piston assembly	-
4	Manual override	Resin
5	Piston chamber	Resin
6	Manual protection cover	Resin
7	Spool assembly	-
8	Body	Aluminum alloy die-casting
9	Cap	Resin
10	Spool spring	Stainless steel
11	Single base	Aluminum alloy die-casting
12	Safety limit switch	-

Dimensions

● 1 station (standard flow)

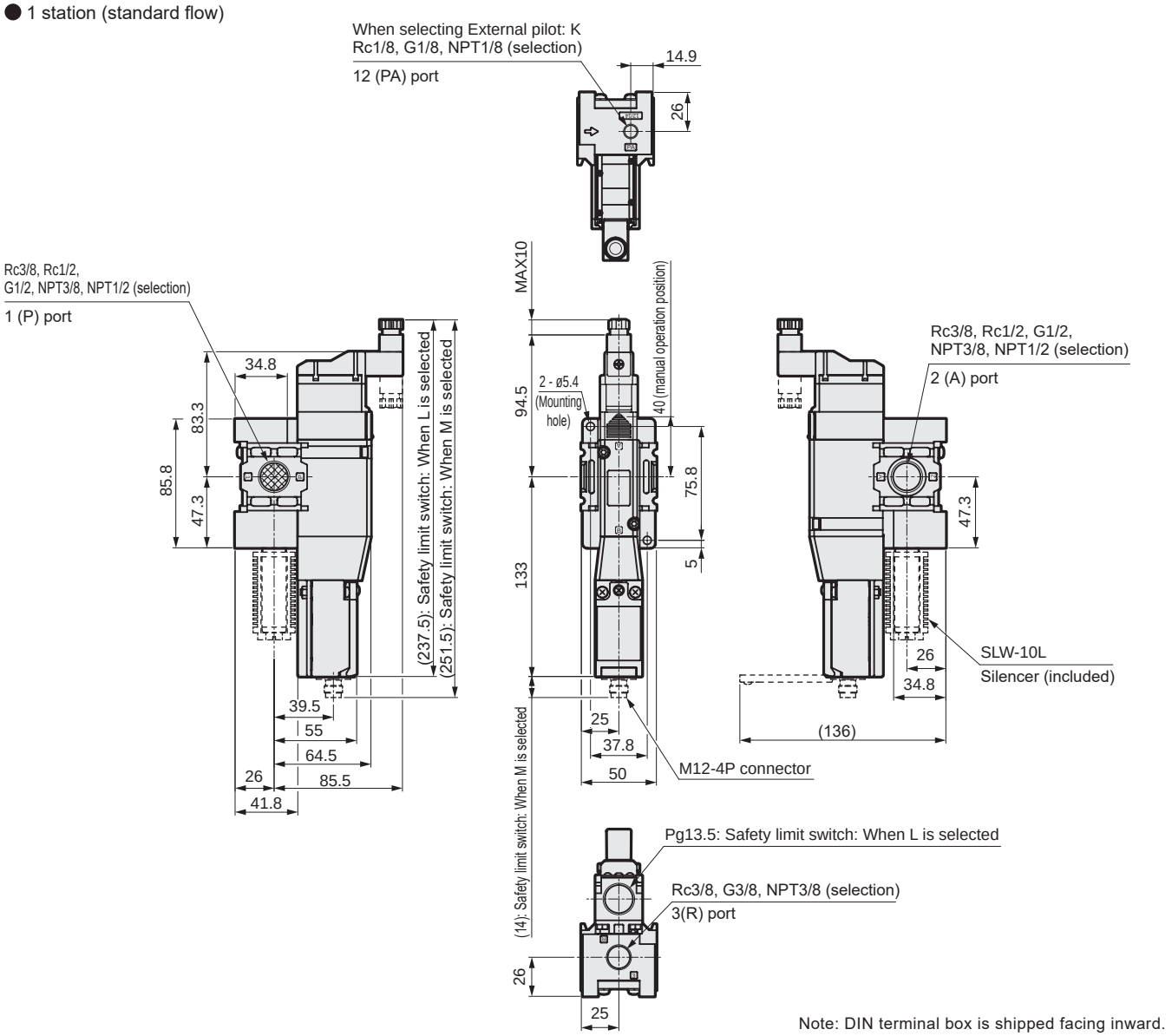

Note: DIN terminal box is shipped facing inward.

● Safety limit switch: Blank

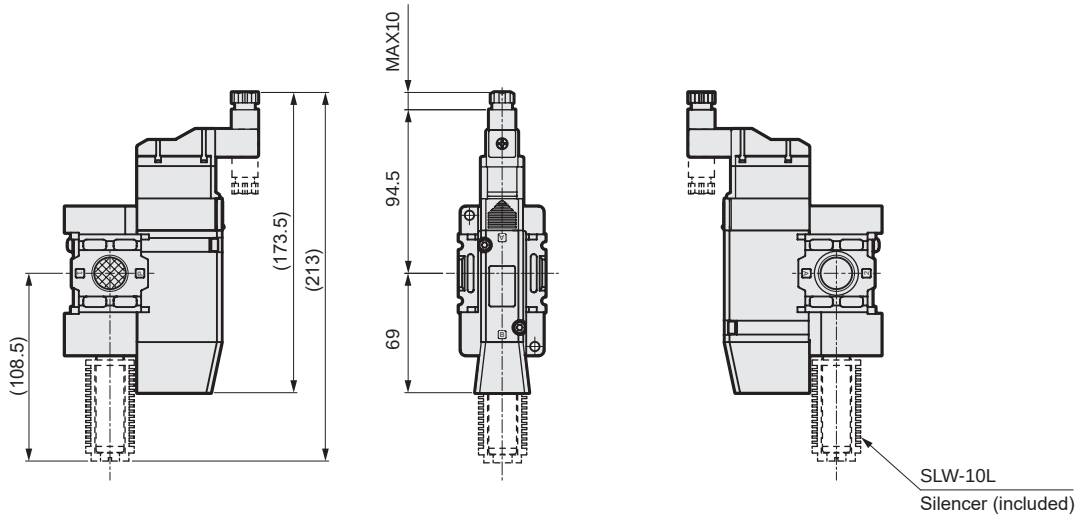

Dimensions

● 1 station (reverse flow)

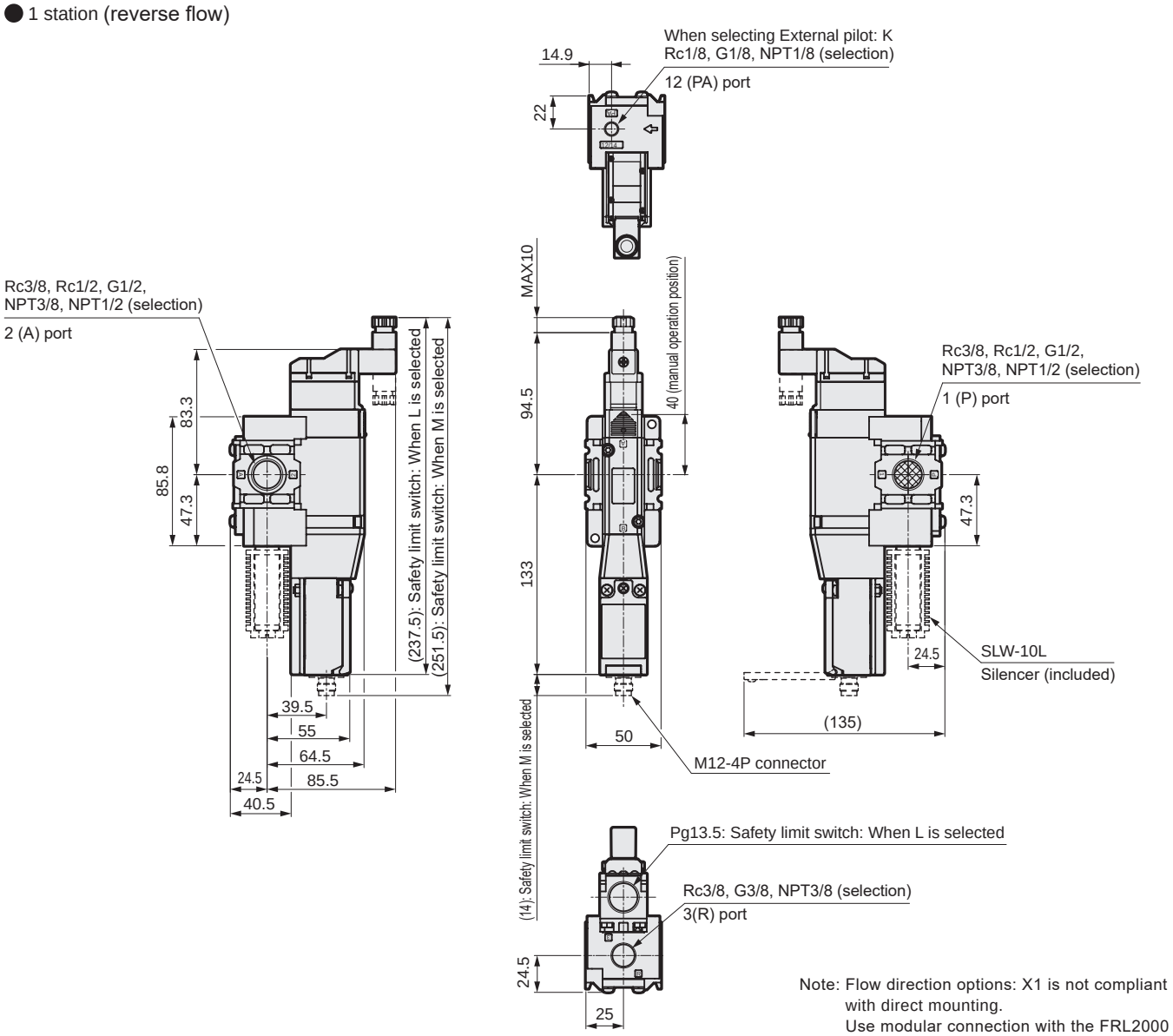

Note: Flow direction options: X1 is not compliant with direct mounting.
Use modular connection with the FRL2000 to 4000 Series.
Note: DIN terminal box is shipped facing inward.

● Safety limit switch: Blank

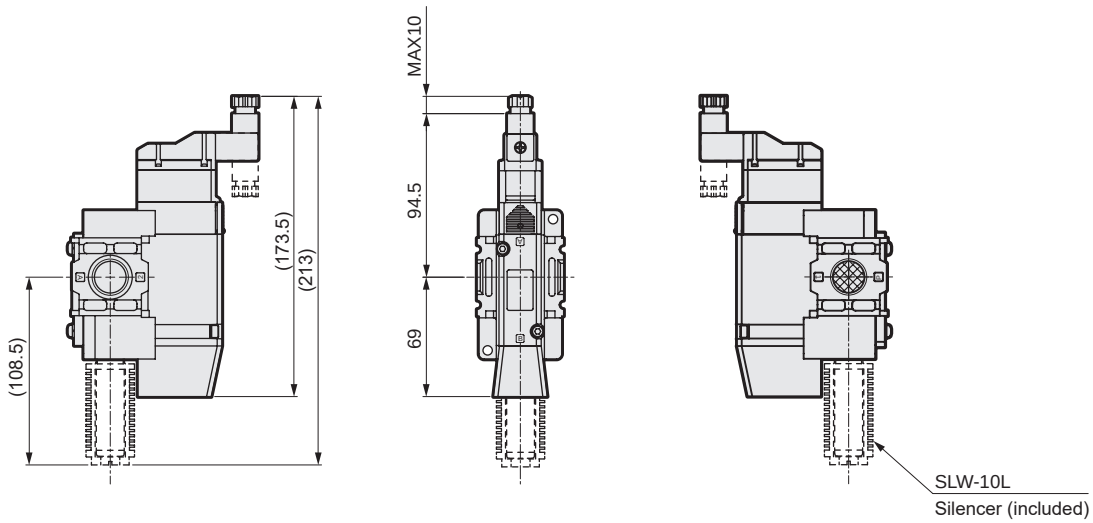

Dimensions

● 2 stations

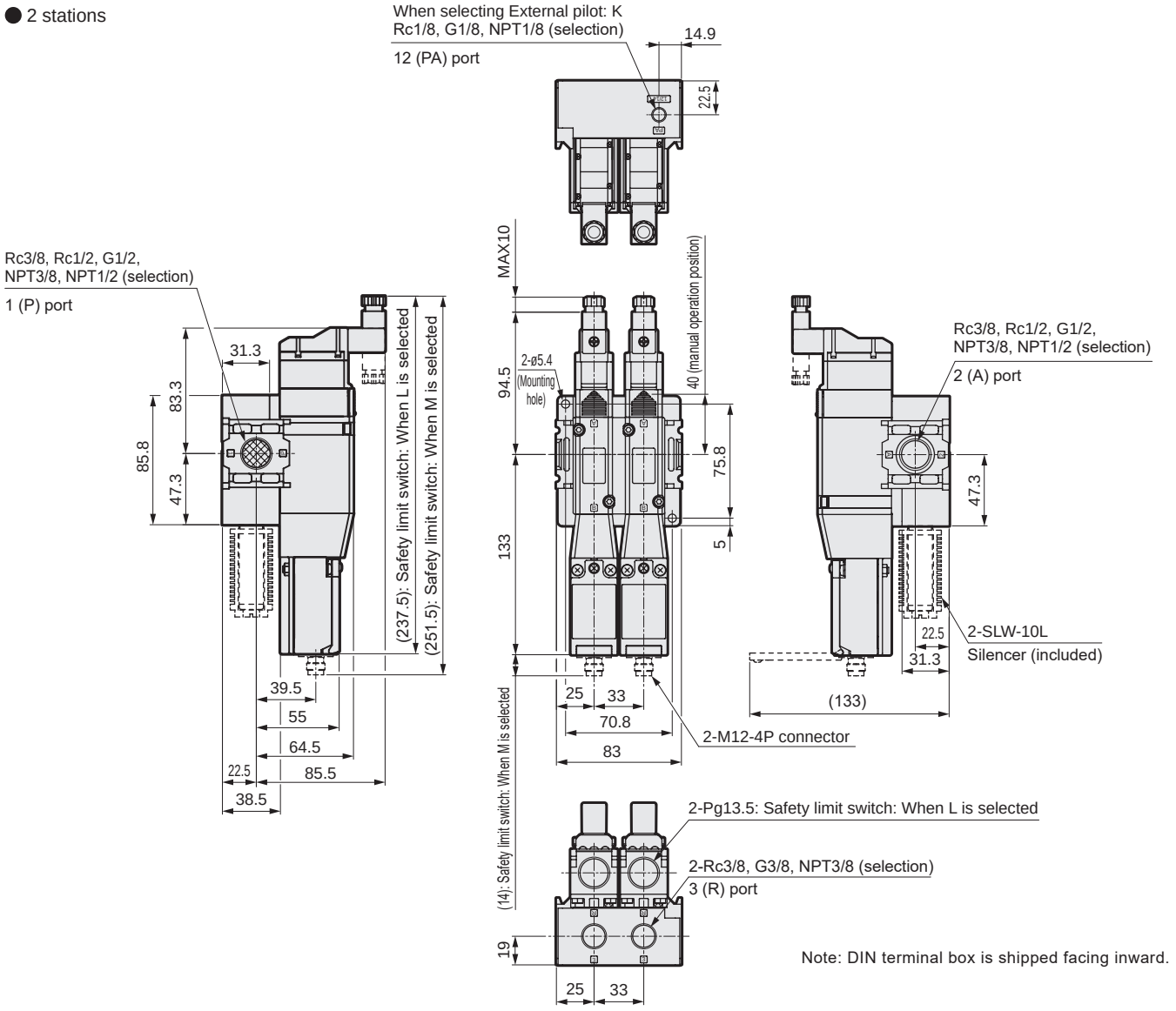

Note: DIN terminal box is shipped facing inward.

Parts list

● DIN terminal box

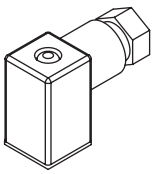

Part model No.

SNS-TERMINAL-BOX-3

Related products

● T-bracket set

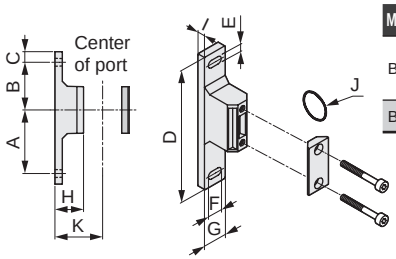

Model No.	Compatibility	A	B	C	D	E	F	G	H	I	J	K	Weight (kg)
B310-W	2000 Series 3000 Series	60	45	10	125	7	14	22	27	7	JISB2401-P21	45	0.086
B410-W	4000 Series	60	45	10	125	7	14	22	37	7	JISB2401-P21	55	0.094

• Material: Aluminum alloy die-casting (B310 to B410-W)
Painting (B310 to B410-W)

● Joiner set

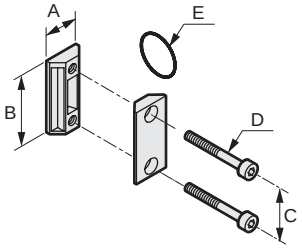

Model No.	Compatibility	A	B	C	D	E	Weight (kg)
C4000-J400-W	2000 Series 3000 Series 4000 Series	21	44	32	M5	JIS B2401-P21	0.036

• Material: Aluminum alloy die-casting (J400)
Painting (J400)

Safety Precautions

Be sure to read this section before use.
For general precautions, refer to Intro Page 63, and check "Pneumatic Valves No.CB-023SA."

Product-specific cautions: Residual pressure exhaust valve with spool position detection SNS Series

Design/selection

Continuous energizing

⚠CAUTION

■In the following cases, to prevent deterioration of valve performance, enable heat dissipation when installing, so that the ambient temperature remains within the specification range.

- When the energized time exceeds non-energized time in intermittent energizing
- When one energizing session exceeds 30 minutes in intermittent operation

Working pressure

The pressure must be 0.2 MPa and over to operate the SNS Series. If the piping cross-section area on the fluid inlet is reduced, the operation may become unstable due to a pressure drop during valve operation which causes the pressure inside the valve to drop.

Mounting, installation and adjustment

DIN terminal box

⚠WARNING

■As there is a risk of electric shock when assembling or disassembling the terminal box, perform the assembly and/or disassembly after turning OFF the power supply.

⚠CAUTION

■Disassembly

- Loosen screw ① and pull cover ② in the direction of screw ① to remove the connector from coil assembly ⑫.
- Remove screw ① from cover ②.
- Notch ⑨ (next to the GDSN mark) can be found at the bottom of terminal block ③. Insert a small flathead screwdriver in the gap between housing ② and terminal block ③ and pry to remove terminal block ③ from cover ② (refer to Fig. 1).Remove the terminal block without applying excessive force. There is a risk of damage.
- Remove cable gland ④ and take out washer ⑤ and rubber packing ⑥.

Fig.1 Exploded view

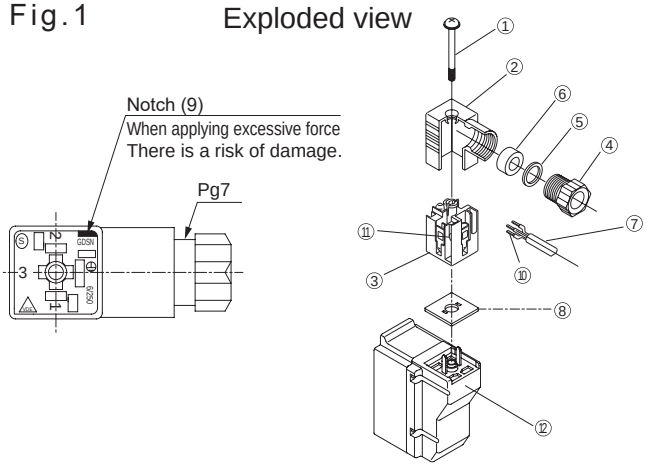

■Electrical connection circuit diagram

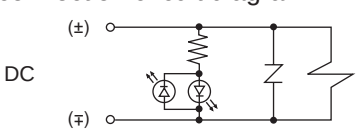

■Wiring

- Wiring preparation
  - The dimensions for cable ⑦ are the VCTF2 (3) core (ø3.5 to 7) defined in JIS C3306.
  - The length of the cable ⑦ lead wire sheath stripping is 10 mm.
  - Both stranded wires and solid wires can be used for wiring.
  - When using a stranded wire, avoid connecting a pre-soldered wire.
  - When using crimp sleeve ⑩ at the end of the stranded wire, select H0.5/6 (0.3 to 0.5 mm^2) or H0.75/6 (0.75 mm^2) made by Weidmüller Japan, or an equivalent product. Crimp sleeves are not included.
- Wiring
  - Pass cable ⑦ through cable gland ④, washer ⑤, and rubber packing ⑥ in this order, and insert it into cover ②.
  - Connect it to terminals 1 and 2. There is no polarity.
  - The recommended tightening torque is 0.2 to 0.25 N·m.

■Assembly

- Set wired terminal block ③ on cover ②. (Push in until it clicks.)

* The terminal block can be set in any of the four different directions (Fig.2).

- Insert rubber packing ⑥ and washer ⑤, in this order, into the cable through hole in cover ②, and securely tighten cable gland ④.
  Remarks: The recommended tightening torque for the cable gland is 1.0 to 1.5 N·m.
  Pull the cable to check that it does not become loose.
- Place gasket ⑧ between the bottom part of terminal block ③ and the plug of coil assembly ⑫, insert the connector, insert screw ① from over cover ② and tighten it.
  Remarks: The recommended tightening torque for screws is 0.4 to 0.45 N·m.

Fig.2

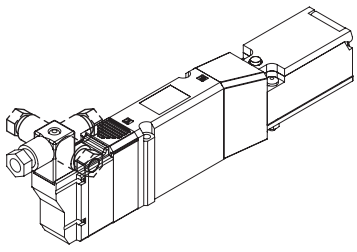

Port filter

The port filter prevents the entry of foreign matter, and prevents problems from occurring in the valve. This product does not improve compressed air quality. Do not detach or press down the port filter forcibly.
The filter could deform, causing problems. If contaminants and foreign matter are found on the filter surface, blow them off lightly with air, or remove them with tweezers, etc.

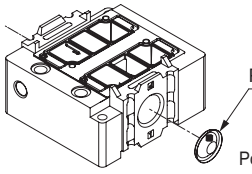

Port filter (Standard) example of embedding

How to connect limit switch

Applicable to products with the limit switch option code "L" and "M".

For the limit switch option code "L"

⚠CAUTION

- Do not push a crimp terminal or the like into the gap of the case, as it may cause the case to be damaged or deformed.
- Be sure to use a crimp terminal 0.5 mm thick or less to avoid interference with the inside of the switch case.

■ When connecting to the terminal via insulating tube and M3.5 crimp terminal, place the crimp terminals as shown in the figure below so as not to ride over the case or cover.

■ The applicable lead wire size is AWG 20 to 18 (0.5 to 0.75 mm^2). The lead wire should be processed in accordance with the length in the figure below. The excess lead wire may come into contact with the cover and cause it to be lifted.

■ When mounting a connector to the conduit port, be sure to use a connector with the thread length of 9 mm or less so as not to interfere with the built-in switch.
Recommended connector: ST-13.5 5301-5030 (LAPP)
Recommended seal packing: JPK-16, GP-13.5 or GPM20

Electrical connection circuit diagram

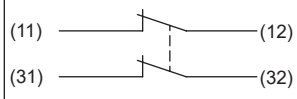

Lead wire processing drawing

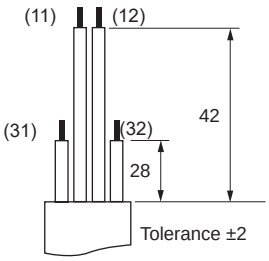

Crimp terminal layout drawing

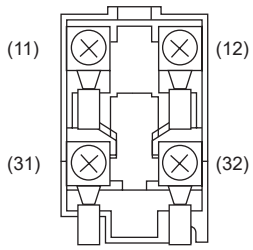

For the limit switch option code "M"

Electrical connection circuit diagram

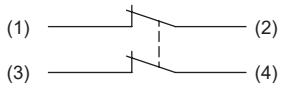

Connector pin No.

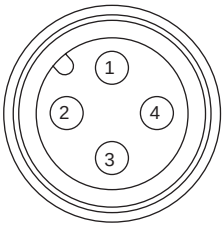

Limit switch

■ For the tightening torque of each part, refer to the table below.

Screw tightening point	Recommended tightening torque values
Terminal thread	0.6 to 0.8 [N·m]
Cover mounting screw	0.5 to 0.7 [N·m]
Connector	1.8 to 2.2 [N·m]

■ For switching at normal load (250 VAC, 3 A), do not use two or more circuits at once. There is a risk of decreased insulation function.

■ OMRON D4N-1B31 (option code L) or D4N-9B31 (option code M) limit switch is used. Refer to the manufacturer's catalog for details.

Operational explanation

Category 2 compliant product (SNS-1...)

To handle safety function checks, the residual pressure exhaust valve body is equipped with a limit switch which carries out spool valve position detection.

Category 3, 4 compliant product (SNS-2...)

In addition to the above, two residual pressure exhaust valves are connected serially, enabling redundancy. Even if one should malfunction, the switching operation of the other will discharge compressed air from the output port to the discharge port.

The limit switch used is a safety limit switch with direct open circuit operation. When compressed air is output from output port 2 (A), the limit switch electrical contact is OPEN; when the output port 2 (A) compressed air is discharged to the outside from discharge port 3 (R), the limit switch electrical contact is CLOSED.

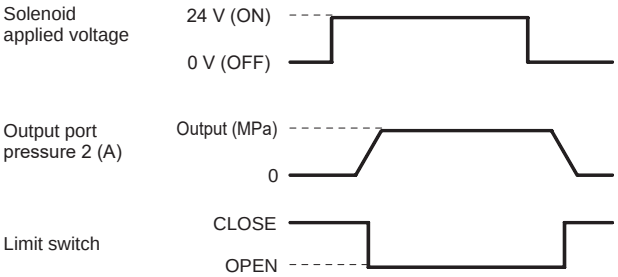

When not energized (Refer to the figure below)

Flow path: 2 (A) and 3 (R) are connected.
(Residual pressure removal status)

Limit switch: CLOSE

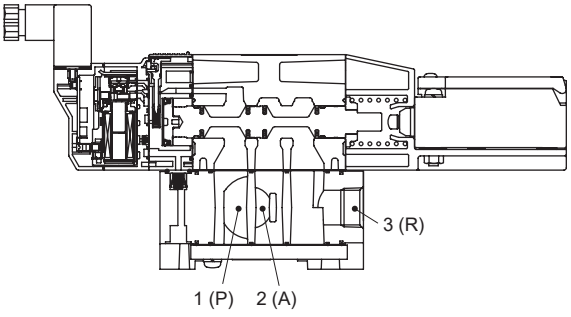

When energized (Refer to the figure below)

Flow path: 1 (P) and 2 (A) are connected.

Limit switch: OPEN

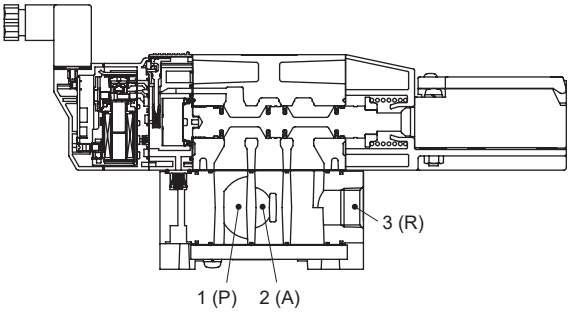

MEMO

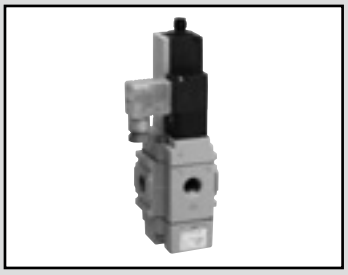

3-port solenoid valve with spool position detection

SNP Series

● Port size: Rc3/8 to Rc3/4

RoHS CAD

Specifications

Model		SNP		
Port size		Rc3/8	Rc1/2	Rc3/4
Actuation		NC (normally closed) type		
Fluid pressure supply port		P-port		
Working fluid		Compressed air		
Proof pressure	MPa	1.05 (≈150 psi, 10.5 bar)		
Working pressure range	MPa	0.2 (≈29 psi, 2 bar) to 0.7 (≈100 psi, 7 bar)		
Fluid temperature	°C	5 (41°F) to 60 (140°F)		
Ambient temperature	°C	-5 (23°F) to 60 (140°F)		
Weight	kg	0.8(1.7) *1		1.8(3.7) *1
Orifice size	mm	14.8 or equiv.		25.4 or equiv.
Valve seat leakage		1 or less (at pneumatic pressure 0.2 to 0.7 MPa)		
Valve structure		Internal pilot balance poppet structure		
Mounting orientation		Unrestricted		

*1: Values in ( ) are the weight for modules

Electrical specifications			
Rated voltage	(*2)	100 VAC (50/60 Hz) / 110 VAC (60 Hz), 200 VAC (50/60 Hz) / 220 V (60 Hz), 24 VDC	
Apparent power (VA)	When holding	3.6 (50 Hz),2.8 (60 Hz)	
	When starting	11 (50 Hz),9 (60 Hz)	
Power consumption (W)	AC	1.9 (50 Hz),1.5 (60 Hz)	
	DC	2.0	
Thermal class		B	
Degree of protection (IEC Standard 529)		DIN terminal box (Pg 9)	IPX5
		DIN terminal box (M12-4P connector)	

*2: The voltage range must be within ±10% of the rated voltage.
*3: Contact CKD for details on reliability data (B10).

Limit switch specifications

Limit switch specifications		
Manufacturer Model	D4N-1B31	D4N-9B31
Terminal	Pg13.5	M12-4P connector
Contact resistance	25 mΩ or less	
Minimum applicable load	5VDC 1 mA resistance load	
Rated insulation voltage V	300	
Insulation resistance MΩ	100	
Electric shock protection class	Class II	
Pollution degree (working environment)	3 (EN60947-5-1)	
Conditional short-circuit current A	100	

* Refer to the manufacturer's catalog for details.

Flow characteristics

Model No.		P→A		A→R	
		C[dm³/(s/bar)]	S(mm²)	C[dm³/(s/bar)]	S(mm²)
Single unit	SNP-10A	13	64	14	70
	SNP-15A	15	76	16	80
	SNP-20A	34	170	36	180
2 stations	SNP-10A	10	50	14	70
	SNP-15A	12	59	16	80
	SNP-20A	26	130	36	180

How to order

SNP - 1R - 15A - 0 2HS L B3 S1 - 1

- Ⓐ Station No.
- Ⓑ Port size
- Ⓒ Sealant
- Ⓓ Coil option
- Ⓔ Limit switch
- Ⓕ Bracket
- Ⓖ Silencer
- Ⓗ Voltage

Code	Description
Ⓐ Station No.	
1R	Single unit (terminal box right-facing)
1L	Single unit (terminal box left-facing)
2	2 (2 modules)
Ⓑ Port size	
10A	Rc3/8
15A	Rc1/2
20A	Rc3/4
Ⓒ Sealant	
0	NBR
Ⓓ Coil option	
2G	DIN terminal box
2HS	DIN terminal box with light/surge suppressor
2J	DIN terminal box (M12-4P connector)
2KS	DIN terminal box with light/surge suppressor (M12-4P connector)
Ⓔ Limit switch	
L	Pg13.5 (D4N-1B31: OMRON)
M	M12-4P connector (D4N-9B31: OMRON)

Ⓕ Bracket *1

		10A	15A	20A
Blank	No option	●	●	●
B3	With bracket (2000 Series, 3000 Series)	●	●	
B4	With bracket (4000 Series)	●	●	
B8	With bracket (8000 series)			●

Ⓖ Silencer *2	
Blank	No option
S1	Sintered metal
S2	Resin

Ⓗ Voltage	
1	100 VAC 50 Hz/60 Hz/110 VAC 60 Hz
2	200 VAC 50 Hz/60 Hz/220 VAC 60 Hz
3	24 VDC

Precautions for model No. selection

*1: The bracket can be selected when station No. Ⓐ is "2".
*2: Silencer is attached to the product

[Example of model No.]

SNP-1R-15A-02HSLB3S1-1

- Ⓐ Station No. : Single unit (terminal box right-facing)
- Ⓑ Port size : Rc1/2
- Ⓒ Sealant : NBR
- Ⓓ Coil option : DIN terminal box with light/surge suppressor
- Ⓔ Limit switch : Pg13.5
- Ⓕ Bracket : With bracket
- Ⓖ Silencer : Sintered metal
- Ⓗ Voltage : 100 VAC 50 Hz/60 Hz

Internal structure and parts list

● SNP-1*-10A/15A

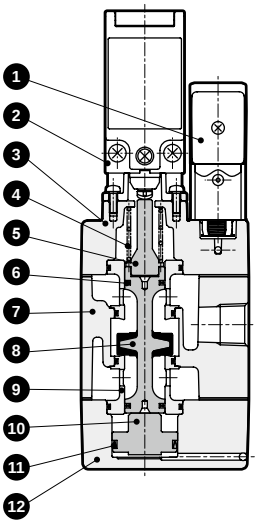

●SNP-1*-20A

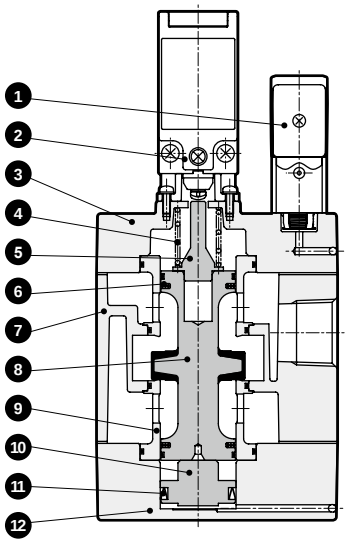

No.	Part name	Material	
1	Pilot solenoid valve	-	
2	Limit switch	-	
3	Body	ADC12	Aluminum die-casting
4	Spring	SWP	Piano wire
5	Indicator	A2017	Aluminum
6	PSD packing	NBR	Nitrile rubber
7	Body	ADC12	Aluminum die-casting
8	Valve stem	NBR,A2017	Nitrile rubber, aluminum
9	Valve seat	A5056	Aluminum
10	Piston	A2017	Aluminum
11	MY packing	NBR	Nitrile rubber
12	Cap	ADC12	Aluminum die-casting

Dimensions

● SNP-1L-10A/15A (single unit)

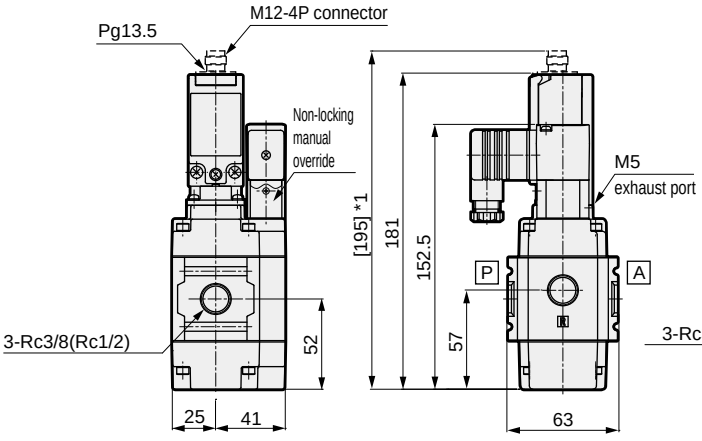

● SNP-1L-20A (single unit)

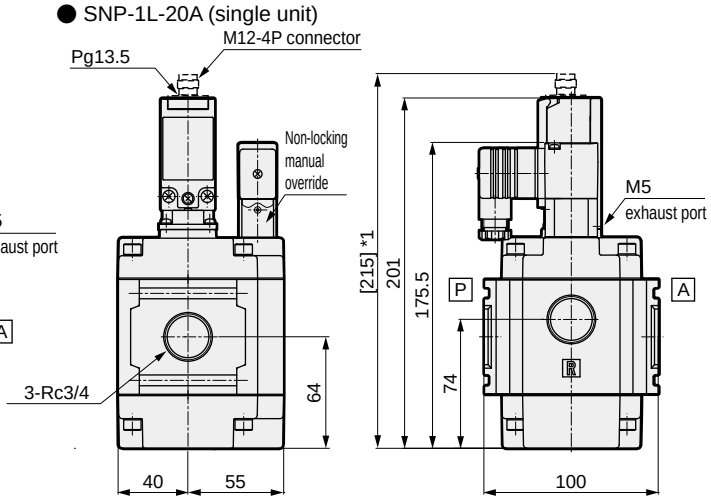

*1: [ ] shows dimensions when M12-4P connector (M) is selected
*2: For 1R, the wiring of the terminal box and limit switch is positioned to the right.

● SNP-2-10A/15A (2 stations)

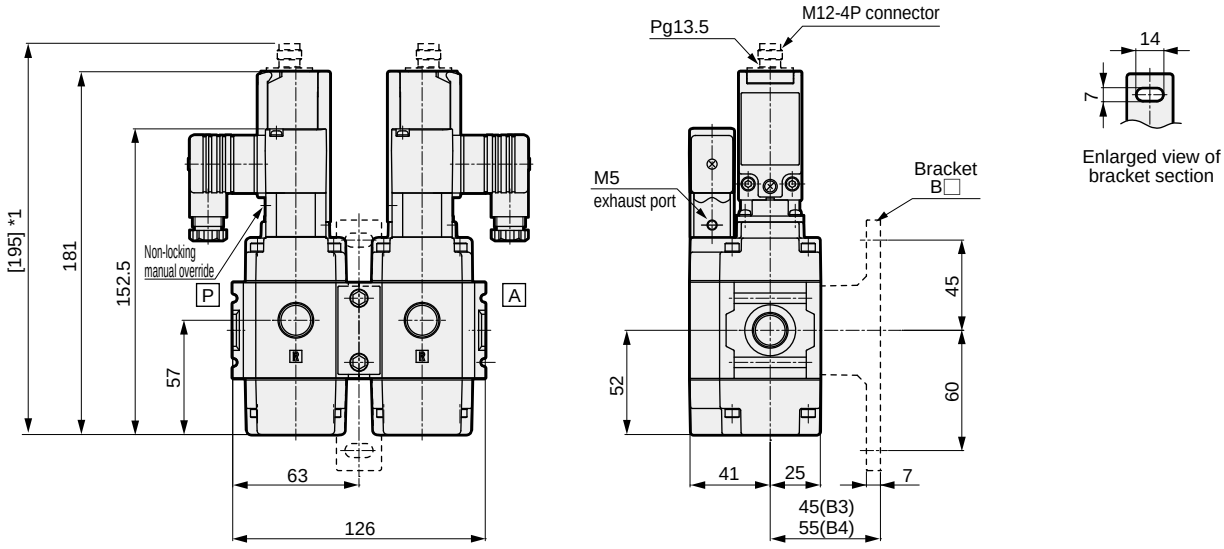

*1: [ ] shows dimensions when M12-4P connector (M) is selected

● SNP-2-20A (2 stations)

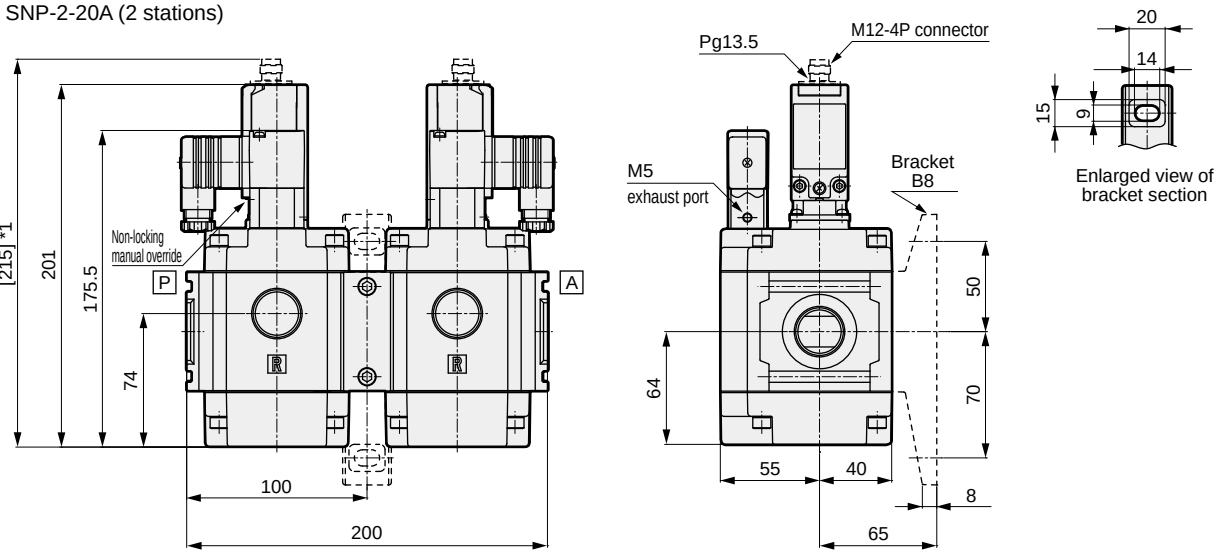

*1: [ ] shows dimensions when M12-4P connector (M) is selected

Option dimensions with silencer

* Silencer is provided with the product.

●SNP-1L-10A-*S1

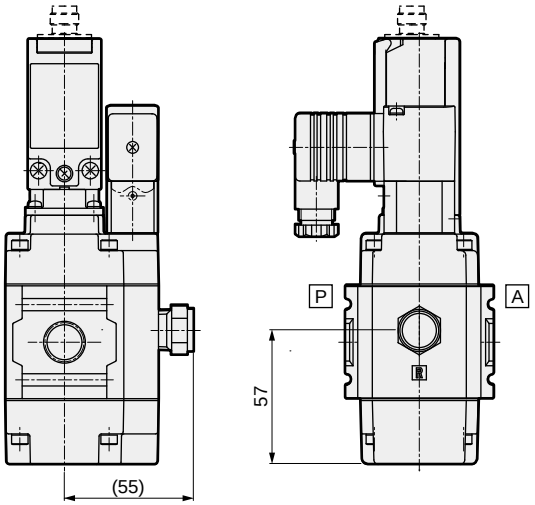

●SNP-1L-10A-*S2

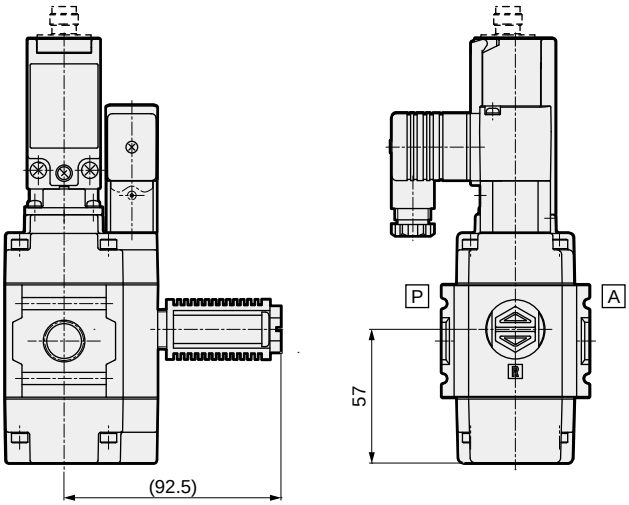

●SNP-1L-15A-*S1

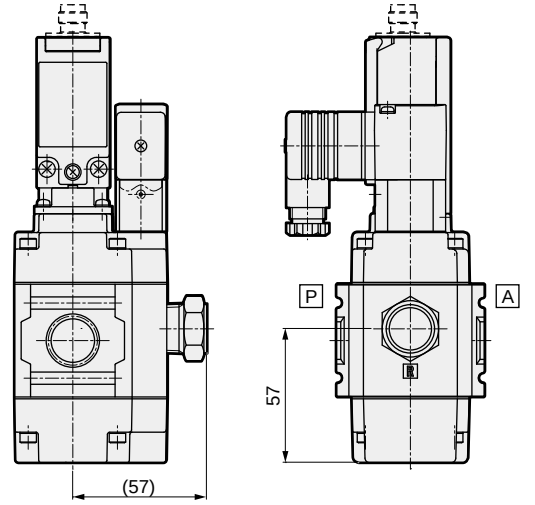

●SNP-1L-15A-*S2

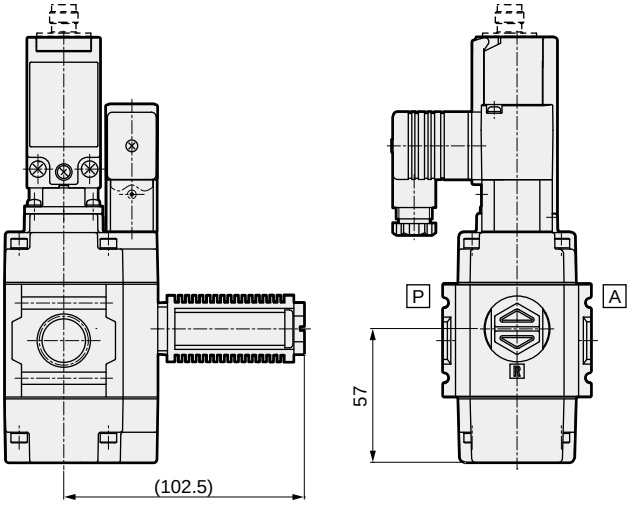

●SNP-1L-20A-*S1

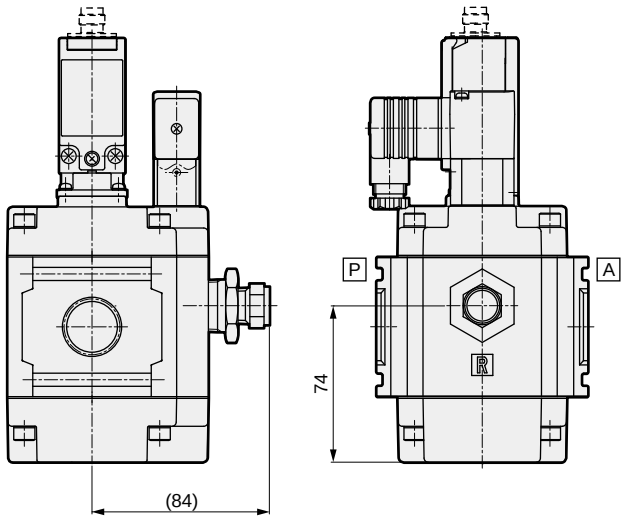

●SNP-1L-20A-*S2

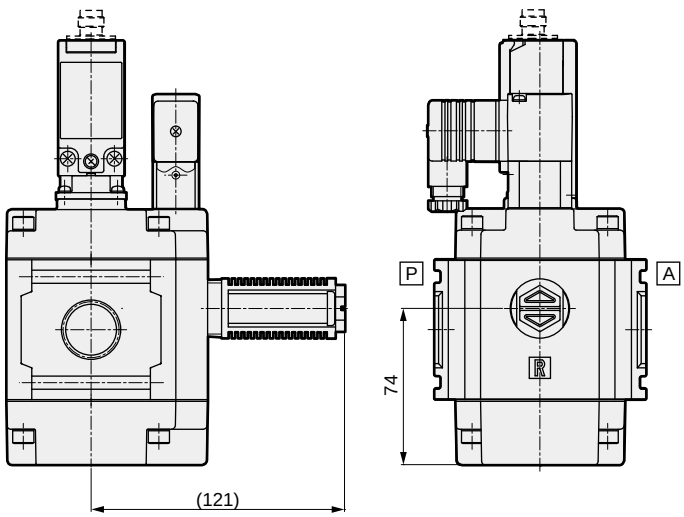

Coil option dimensions

● DIN terminal box (Pg9)
DIN terminal box with lamp/surge suppressor (Pg9)
SNP-* 2G / 2HS

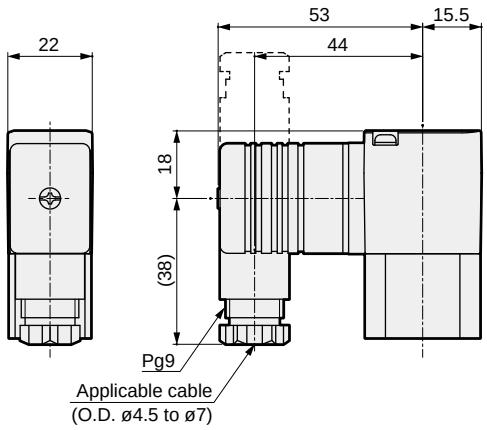

● DIN terminal box (M12-4P connector)
DIN terminal box with lamp/surge suppressor (M12-4P connector)
SNP-* 2J / 2KS

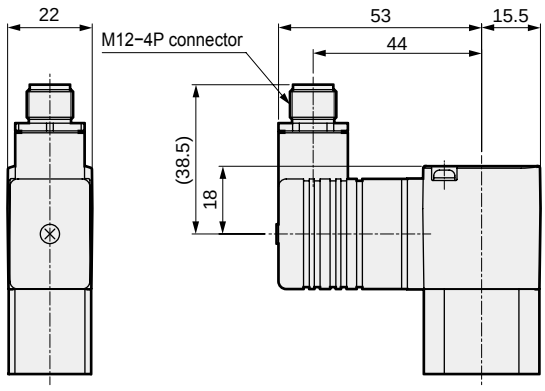

Connector pin array

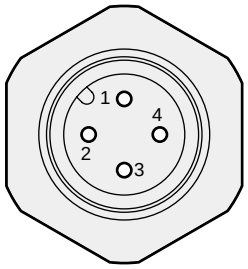

PIN No.	Applications
1PIN	Ground
2PIN	(Not used)
3PIN	Power supply -
4PIN	Power supply +

* As it is a screw-in, the connector pin positions may not be the same as those shown above.

How to connect limit switch

Applicable to products with the limit switch option code “L” and “M”.

(1) When connecting to the terminal via insulating tube and M3.5 crimp terminal, place the crimp terminals as shown in Figure 2-7 so as not to ride over the case or cover.

(2) The applicable lead wire size is AWG 20 to 18 (0.5 to 0.75 mm^2).
The lead wire should be processed in accordance with the length in Figure 2-7. The excess lead wire may come into contact with the cover and cause it to be lifted.

CAUTION	Do not push a crimp terminal or the like into the gap of the pipe case, as it may cause the case to be damaged or deformed. Be sure to use the crimp terminal with the thickness of 0.5 mm or less to avoid interference with the inside of the switch case.

· For the limit switch option code "L"

Circuit configuration	Crimp terminal layout drawing	Lead wire processing drawing
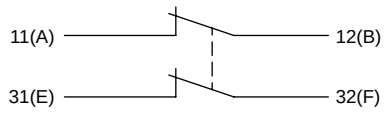	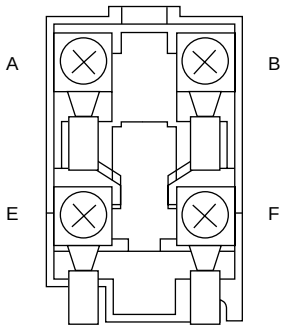	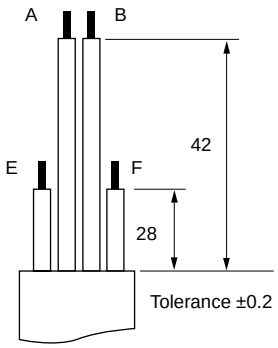

(Figure 2-7)

· For the limit switch option code "M"

Circuit configuration	Connector pin No.
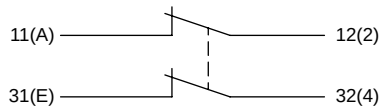	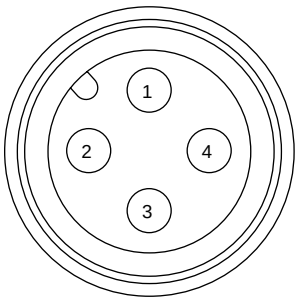

(Figure 2-8)

(3) When mounting a connector to the conduit port, be sure to use a connector with the thread length of 9 mm or less so as not to interfere with the built-in switch.
Recommended connector ST-13.5 5301-5030 (LAPP)
Recommended seal packing JPK-16, GP-13.5 or GPM20

(4) For the tightening torque of each part, please refer to Table 2-3.

Table 2-3 Applicable tightening torque

Screw tightening point	Recommended tightening torque values
Terminal thread	0.6 to 0.8 [N·m]
Cover mounting screw	0.5 to 0.7 [N·m]
Connector	1.8 to 2.2 [N·m]

Fluid Control Components: Warnings and Cautions

Be sure to read this section before use.

Precautions for each model series and for individual products

3-port solenoid valve with spool position detection (SNP)

Design/selection

⚠ WARNING

1 Ambient environment

(1) SNP Series cannot be used in an explosive gas atmosphere.

(2) If there are high levels of dust in the area, install a downward-facing silencer or elbow fitting on the exhaust port so that dust does not enter.

⚠ CAUTION

1 Ultra dry air

The inside of the valve is pre-lubricated with grease. This valve may not be appropriate if extra dry air quality is required at the end of the circuit.

2 Leakage current from other fluid control components

When operating the solenoid valve with a programmable controller, etc., check that the output leakage current from the programmable controller is within the following specifications. Failure to observe this could lead to malfunctions.

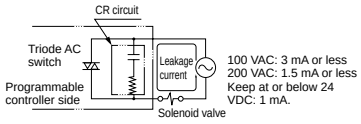

3 Min. working pressure

The pressure must be 0.2 MPa and over to operate the SNP Series. If the piping cross-section area on the fluid inlet is reduced, the operation may become unstable due to a pressure drop during valve operation which causes the pressure inside the valve to drop .

4 Fluid supply side piping

Ensure that the effective cross-sectional area of the fluid supply side (P port) pipe is twice the pipe composite effective cross-sectional area to be connected to the outlet side (A port) and exhaust side (R port). The min. working pressure may not be attainable due to insufficient flow during valve operation.

Mounting, installation and adjustment

⚠ CAUTION

1 Piping

Do not pipe using the solenoid valve and limit switch. There is a risk of damage.

2 Wiring

(1) For DIN terminal box connection, refer to “General Purpose Valves (No. CB-03-1SA).”

(2) When changing the nominal thread size from Pg9 to G1/2 for the DIN terminal box's junction box outlets, use the optional connector shown at the right.

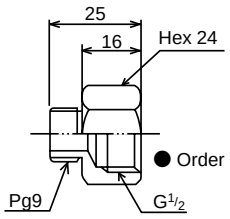

● Order Model No.: CVS2-CONNECTOR-F4-202936

(3) Coil direction can be changed 180°.

To reverse the electrical connection direction, rotate only the coil. The valve will not function if the pilot solenoid valve body is moved.

(4) When using a connector for the limit switch, be sure to use one with thread length of 9 mm or less.

Recommended connector: ST-13.5 5301-5030 (LAPP)

Recommended seal packing: JPK-16, GP-13.5 or GPM20

Use/maintenance

⚠ CAUTION

1 Transfer circuit

When using a vacuum absorbing pad (suction bowl) for the transfer circuit, install a filter between the suction pad and valve so that foreign matter does not enter the valve. Otherwise, leakage may result.

2 Leaving under elevated pressure

If the valve is left under elevated pressure for three days or longer, the starting response could be delayed.

3 Pilot solenoid valves

Pilot solenoid valve for CVSE2 (actuator assembly kit): Equipped with CVSE2-ACTUATOR-0 [*1] T- [Rated voltage].

After disassembly, assemble the manual override section (green) onto the port P side of the body.

Note: [*1] is the coil housing code.

[*2] is the rated voltage code.

MEMO

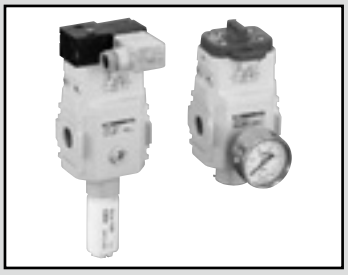

Slow start valve Standard White Series

V3301-W/V3321-W Series

Ensuring safety when starting and stopping.

● Port size: Rc1/4 to Rc1/2

JIS symbol

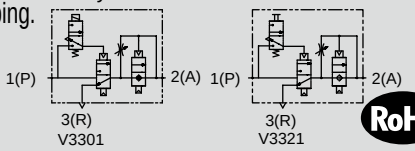

RoHS CAD

Specifications

Item		V3301-W/V3321-W		
Actuation		Pilot operated soft spool valve		
Working fluid		Compressed air (excluding ultra-dry compressed air) *1		
Working pressure MPa		0.2 (≈29 psi, 2 bar) to 1.0 (≈150 psi, 10 bar)		
Proof pressure MPa		1.5 (≈220 psi, 15 bar)		
Ambient / fluid temperatures °C		5 (41°F) to 60 (140°F)		
Port size	1(P)/2(A) port	Rc1/4	Rc3/8	Rc1/2
	3(R) port	Rc3/8		
	Gauge port	Rc1/4		
Effective cross-sectional area mm²	Lo speed air supply	6		
	Hi speed air supply	40	64	76
	Hi speed exhaust	50	74	78
Response time		0.2 sec or less		
Lubrication		No lubrication *2		
Weight g		V3301-W:635 V3321-W:515		
Solenoid valve specifications		**V3301-W**		
Rated voltage V		100 AC (50/60 Hz)	200 AC (50/60 Hz)	24 DC
Starting current A		0.076/0.058	0.038/0.030	0.092
Holding current A		0.038/0.029	0.019/0.015	
Power consumption W		2.2/1.7	2.2/1.7	2.2
Temperature rise K		40 or less		
Voltage fluctuation range		±10%		
Insulation class		Class B		
Electrical connections		Grommet lead wire/terminal box		

*1: Consult with CKD when using ultra dry compressed air.
*2: Use turbine oil Class 1 ISO VG32 for lubrication.

How to order

● Solenoid valve **V3301 - 08 - W** (White type) **- ○○ - 1 - BW**

● Manual type **V3321 - 08 - W - BW**

Ⓐ Port size
Ⓑ Manual operation
Ⓒ Electrical connections
Ⓓ Voltage
Ⓔ Other attachments

Option weight

* Add to the weight of the standard accessories. Unit: kg

Code	Attachment		
	BW	G49P	S
V3301	0.17	0.086	0.015
V3321	0.17	0.086	0.015

⚠ Select the reverse regulator (R*100-W) or reverse filter regulator (W*100-W) when installing the V3301-W, V3321-W onto the primary side of the regulator or filter regulator.

Specifications for rechargeable battery (Catalog No. CC-1226A)

● Structure compatible with rechargeable battery manufacturing process

V3301 - ..... - P4*

Code	Description	
Ⓐ Port size		
1(P)/2(A) port		
08	Rc1/4	
10	Rc3/8	
15	Rc1/2	
Ⓑ Manual operation		
Blank	Non-locking	
M1	Locking	
Ⓒ Electrical connections		
Blank	Grommet lead wire	
S	Grommet lead wire with surge suppressor	
B	Terminal box	
LS	Terminal box surge suppressor/light	
Ⓓ Voltage		
1	100 VAC 50/60 Hz	Standard
2	200 VAC 50/60 Hz	
3	24 VDC	Option
4	12 VDC	
5	110 VAC 50/60 Hz	
6	220 VAC 50/60 Hz	
Ⓔ Other attachments		
Blank	No included products	
BW	C type bracket	
G49P	Pressure gauge: G49D-8-P10	
S	Silencer	

Dimensions

● V3301-W

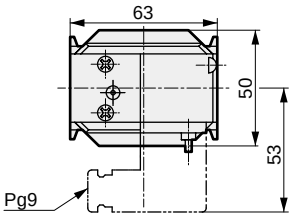

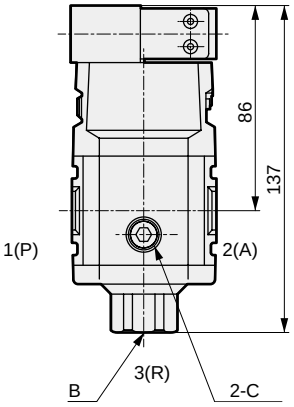

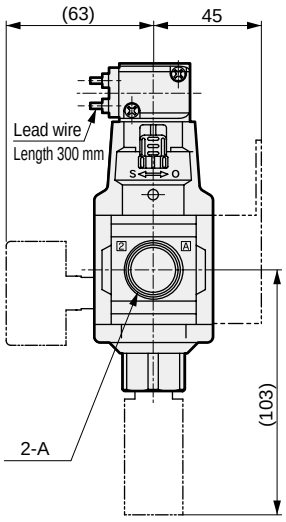

	A	B	C
V3301-08-W	Rc1/4	Rc3/8	Rc1/4
V3301-10-W	Rc3/8		
V3301-15-W	Rc1/2		

● Bracket: B320

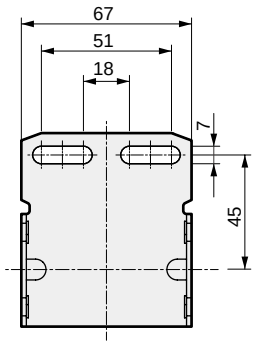

● Pressure gauge: G49D-8-P10

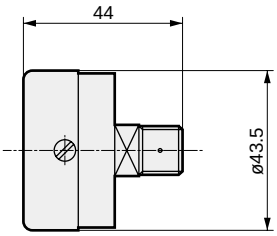

● V3321-W

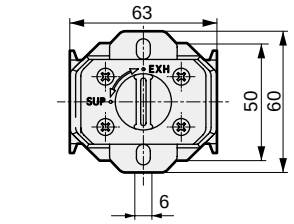

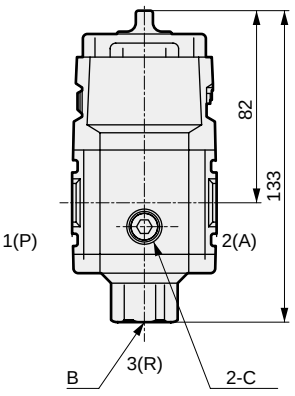

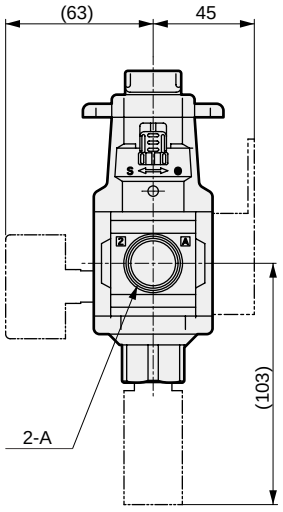

	A	B	C
V3321-08-W	Rc1/4	Rc3/8	Rc1/4
V3321-10-W	Rc3/8		
V3321-15-W	Rc1/2		

● Silencer: SLW-10A

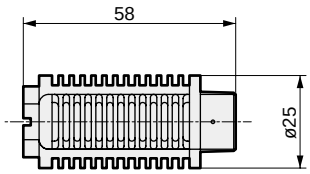

Operational explanation (refer to the operation characteristics)

The slow start valve turns ON when the solenoid valve is energized or the manual section is set to SUP. The valve turns OFF when the solenoid valve is deenergized or the manual section is set to EXH.

(1) First, when the body is turned ON, the low speed supply path opens and compressed air starts to flow to the secondary side, as secondary pressure gradually rises. Secondary pressure gradually starts to rise. Operable cylinders start moving at a low speed and do not pop out.

(2) Next, when secondary pressure exceeds 60% of primary pressure, the high speed supply path opens. Secondary pressure suddenly rises to the same pressure as primary pressure. (Fully open state)

(3) When the body is turned OFF, high speed exhaust starts and residual pressure in the unit is exhausted.

● Operation characteristics

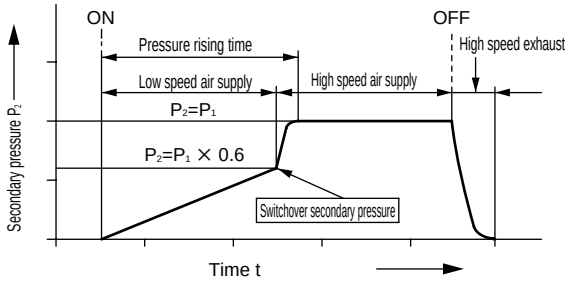

● Switchover secondary pressure

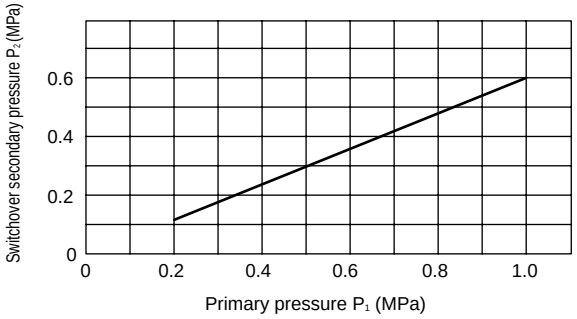

Adjustment method of slow start (refer to the side view)

(1) Press up the slide key and release the adjusting nut lock.

(2) Turn the body ON, and confirm cylinder operation speed and secondary pressure rise time. Turn the body OFF.

(3) Adjust by turning the adjusting nuts as indicated below. Cylinder pops out → Turn to the S side
Low speed operation time is too long → Turn to the O side
Repeat steps (2) and (3) as necessary, and adjust to the ideal state.

(4) Align the adjusting nut keyway to the projection on the slide key.

(5) Press down the slide key and lock the adjusting nut.

(6) Confirm that the body is OFF.

● Side view

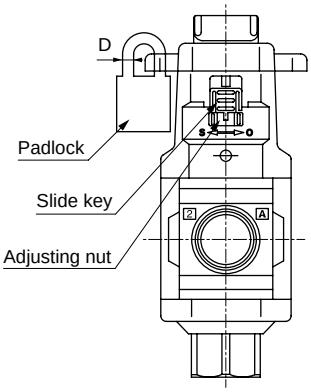

⚠ Safety precautions

*1: This valve is specifically designed to start and stop a device. This valve should not be used for cylinder repeat operation or as a normal 3-way valve.

*2: The min. working pressure of the cylinder must be less than 50% of working pressure in order to be effective in preventing the popping out.

*3: The manual override is locked with a manual valve. Select a padlock with a D dimension of 3.8 to 5.8 mm.

*4: Connect a silencer or exhaust filter, etc., on the exhaust port for safety and noise reduction.

*5: This valve may not switch to high speed supply if air is consumed or air leakage is found at the OUT side during slow speed supply.

*6: Make sure to work on the adjusting nut manually.

*7: Keep the working pressure (supply air pressure at 0.4 MPa or higher when the restricting component is near full opening during slow air supply. Otherwise, the supply air pressure may decline and the unit may not switch to the exhaust.

Modular design
F.R.L.

Anti-bacterial/bacteria-removing filter

■ Refining and pressure adjusting components/F.R.L. unit



CONTENTS

Product introduction 218
Series variation 222
Applications 224
⚠ Safety precautions 246

Combination

● Anti-bacterial/bacteria-removing (SFC307/SFC407) 226
● Anti-bacterial/bacteria-removing/odor removal (SFC309/SFC409) 228
● Anti-bacterial (SFC306/SFC406/SFC806) 230
● Anti-bacterial/odor removal (SFC308/SFC408/SFC808) 232

Filter

● Anti-bacterial pre-filter (SFC310/SFC410/SFC810) 234
● Anti-bacterial high performance filter (SFC320/SFC420/SFC820) 236
● Bacteria removing filter (SFC330/SFC430) 238
● Odor removal filter (SFC340/SFC440/SFC840) 240
● Bacteria removing filter/inline (SFS10) 242

T type bracket set 244
Joiner set (SFJ400/SFJ800) 244
Distributor (SFD401/SFD801) 244
Piping adapter set (SFA400/SFA800) 245

With anti-bacterial properties, removing bacteria from compressed air is important

Proprietary anti-bacterial filter

Silver-based anti-bacterial agent used in

non-woven fabric element

Anti-bacterial effect

Proprietary bacteria-removing filter

Removal rate 99.999999%

hollow fiber membrane

Bacteria removing effect

Antibacterial activity value 4 or more

Bacteria trapping performance LRV ≥ 10



FP Food Process

The background is an image.

Videos available here

F.R.L.
F.R.
F (Filtr)
R (Reg)
L (Lub)
Drain Separ
Mech Press SW
Res press exh valve
SlowStart
Anti-baci/Bac-remove Filt
Film Resist FR
Oil-ProhR
Med Press FR
No Cu/ PTFE FRL
Outdrs FRL
Adapter Joiner
Press Gauge
CompFRL
LgFRL
PrecsR
VacF/R
Clean FR
ElecPneuR
AirBoost
Speed Ctrl
Silncr
CheckV/ other
Fit/Tube
Nozzle
Air Unit
PrecsCompn
Electro Press SW
ContactSW
AirSens
PresSW Cool
Air Flo Sens/Ctrl
WaterRtSens
TotAirSys (Total Air)
TotAirSys (Gamma)
Gas generator
RefrDry
DesicDry
HiPolymDry
MainFiltr
Dischrg etc
Ending

A modularized triple block with reliable anti-bacterial and bacteria removing effects

Anti-bacterial pre-filter | Anti-bacterial high performance filter | Bacteria-removing filter



Fluid passage section resin/rubber **FDA** compliant materials

Antibacterial activity value **4** or more

Bacteria trapping performance **LRV10** or more

Material compatible with the Food Sanitation Act
Fluid passage section resin/rubber

NSF H1 grease for foodstuffs used

Exterior parts use **anti-bacterial** materials

Maintenance

Odor removal filter added

Uses fiber activated carbon. With a large activated carbon adsorption area, it realizes high suction performance and long life.



Push ring employed in SUS

Risk of contamination is reduced, and it can be installed safely near the point of use.



Elements are replaceable

Elements are easy to replace.

Maintenance label equipped as standard *Included with product.

Replacement period will be visible.



* The anti-bacterial activity value and bacteria trapping performance value are the actual values under CKD specified conditions.

Anti-bacterial

Proprietary anti-bacterial filter Thoroughly suppresses bacteria!

Non-woven fabric filter element that uses silver-based anti-bacterial agent

A silver-based anti-bacterial agent is used in the non-woven fabric element

The silver ion present in the antibacterial filter adsorbs into the cells of bacteria, the bacteria's enzyme actions are obstructed, and they die out.



Silver ions absorbed into bacteria cells | Inhibits enzyme actions | Die out

Anti-bacterial performance

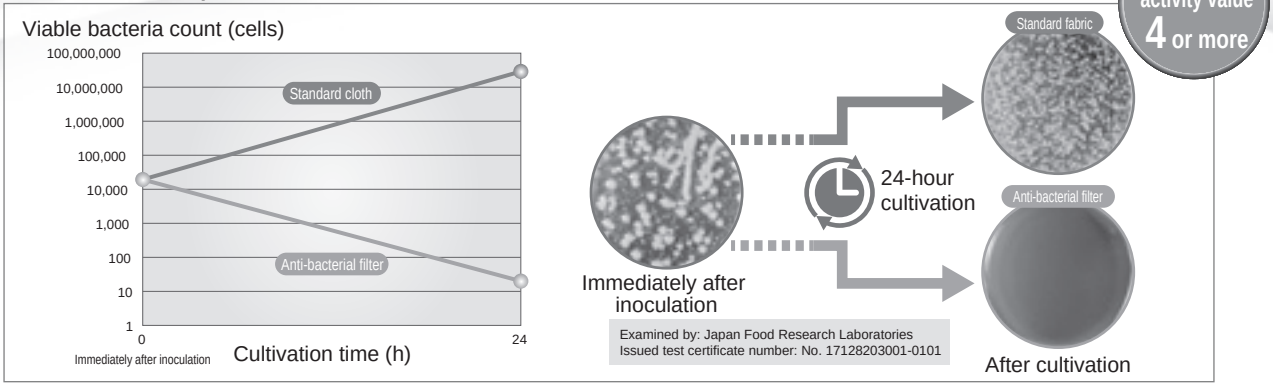

Verification data from testing based on JIS L 1902:2015

Bacteria removing

Proprietary bacteria-removing filter Removes bacteria!

Removal rate 99.999999% hollow fiber membrane

Hollow fiber bacterium

The straw-like fiber wall of the bacteria removing filter has numerous, special slit-like ultrafine pores.
When compressed air passes through these holes, they capture bacteria.

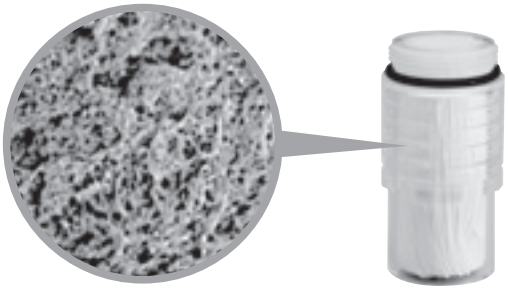

Bacteria removing performance

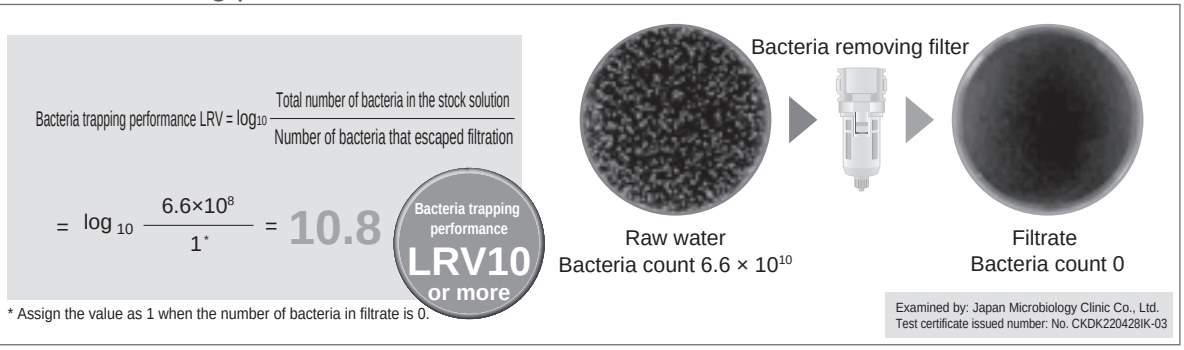

Verification data from test done based on JIS K 3835

Anti-bacterial/bacteria-removing filter

	Anti-bacterial/ Bacteria removing Combination		Anti-bacterial/bacteria-removing/odor removing Combination		Anti-bacterial Combination		
	 SFC307	SFC407	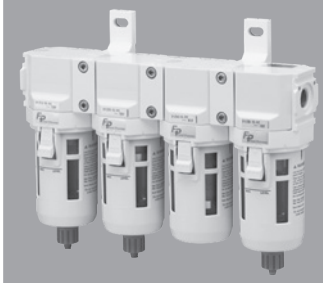 SFC309	SFC409	 SFC306	SFC406	SFC806
Selectable Flow rate Unit: L/min. (ANR) Primary pressure 0.7 MPa	300	500	300	500	360	700	2200
Bacteria-trapping Bacteria removing performance Bacteria trapping performance 99.999999% (≥LRV 10)	●		●		-		
Bacteria suppressing Anti-bacterial performance Antibacterial activity value 4 or more	●		●		●		
Uses suction to eliminate oil odors. Deodorization performance Secondary oil content 0.003 mg/m³ or less	-		●		-		
Use with peace-of-mind Materials compatible with the Food Sanitation Act FDA compliant materials Public Notice of the Ministry of Health, Labour and Welfare No. 370 fluid passage section resin and rubber FDA 21CFR §175 §177	●		●		●		
Wash away with peace-of-mind Lubricants for food processing machinery NSF H1 grease	●		●		●		
Easy expansion Modular connection	●		●		●		

Keyword descriptions

Antibacterial Activity Value

An evaluation of the growth suppression of attached bacteria.

F-G

F: Increase value on standard cloth
Common logarithm of the average number of living bacteria immediately after inoculation subtracted from the common logarithm of the average number of living bacteria 24 hours after culturing on standard cloth

G: Increase value on processed cloth
Common logarithm of the average number of living bacteria immediately after inoculation subtracted from the common logarithm dof the average number of living bacteria 24 hours after culturing on processed cloth

* Antibacterial Activity Value and bacteria trapping performance are actual values from CKD's prescribed conditions.

Bacteria trapping performance

Portrays filter's bacteria trapping performance using test bacteria as defined in JIS K 3835. Displayed using LRV (Log Reduction Value).

Deodorization performance

Evaluation conforms to JIS B 8392-5 "Compressed air - Test methods for oil vapour and organic solvent content". The quantity of oil vapor in the compressed air (hydrocarbons composed of 6 or more carbon atoms) is derived from quantitative analysis with a gas chromatograph.

Anti-bacterial/bacteria-removing filter

Anti-bacterial/odor removing Combination	Anti-bacterial Pre-filter	Anti-bacterial High-performance filter	Bacteria removing Single	Deodorizing Filter	Bacteria removing Inline
					
SFC308 SFC408 SFC808	SFC310 SFC410 SFC810	SFC320 SFC420 SFC820	SFC330 SFC430	SFC340 SFC440 SFC840	SFS10
360 700 2200	360 700 2200	360 700 2200	300 500	360 700 2200	300
–	–	–	●	–	●
●	●	●	–	–	–
●	–	–	–	●	–
●	●	●	●	●	●
●	●	●	●	●	–
●	●	●	●	●	–

Material compatible with the Food Sanitation Act

As specified in Article 18 of the Food Sanitation Act, the regulations on fluid passage section are for tools, containers and packaging.Standards and criteria for food and food additives, etc., based on(Public Notice of the Ministry of Health and Welfare No. 370 of 1965)Materials used are test-friendly.

FDA compliant materials

Materials compatible with dissolution tests from FDA (the U.S. Food and Drug Administration) ordinance 21CFR §175 (Adhesives and Components of Coatings) and §177 (Polymers) are used in fluid passage section.

FP mark

This logo is a representation of CKD's position toward making safe machinery that supports food processing.

FP Food Process

Anti-bacterial/Bacteria Removing Filter Applications

Cool — Cooling cooked rice

After cooking, rice is cooled over a short period using safe compressed air that has been filtrated with a bacteria removing filter to prevent bacteria growth.


For image purposes.

Large anti-bacterial/ odor removing filter



Bacteria removing filter/inline



Air nozzle flat type



Send — Bread processing

When removing freshly baked bread from the mold, safe compressed air that has been filtrated with a bacteria removing filter is inserted between the bread and the mold.

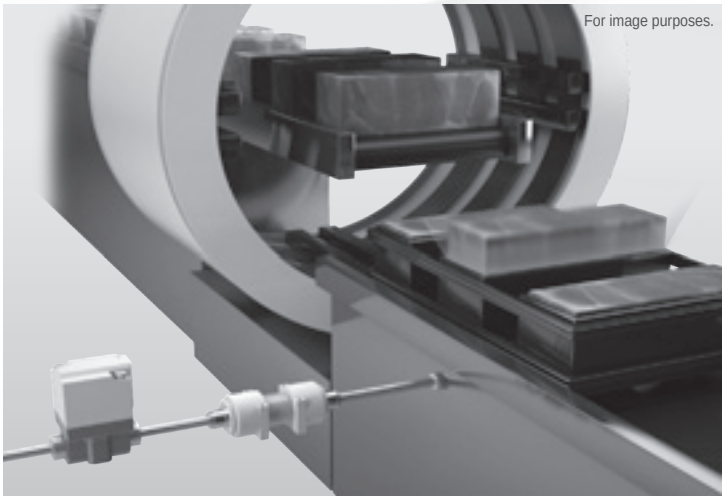
For image purposes.

Bacteria removing filter/inline



Diaphragm cylinder valve



Various FP components



Mix — Mixing while adding in air

In order to give food a smooth texture, safe compressed air that has been filtrated with an anti-bacterial/bacteria removing filter is mixed into the ingredients.


For image purposes.





Anti-bacterial, bacteria/ odor removing filter



2-port solenoid valve



Various FP components



Coat Spray coating food

In the process for keeping dough moist and coating it in oil, chocolate, or soy sauce, food products are liquid-coated with safe compressed air that has been filtrated with an anti-bacterial/bacteria removing filter.


For image purposes.

Anti-bacterial, bacteria/ odor removing filter



Diaphragm cylinder valve



Various FP components



Fill Nitrogen flushing in packaging machines

To prevent oxidization of food, packages are filled with safe nitrogen that has been filtrated with an anti-bacterial/bacteria removing filter in the nitrogen flushing line.

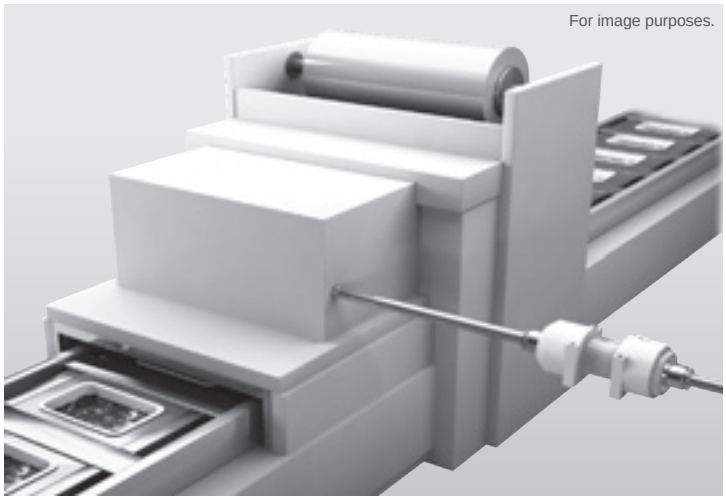
For image purposes.

Bacteria removing filter/inline



2-port solenoid valve for dry air



Compact flow rate sensor



Remove Cleaning food deposits

Compressed air that has been filtrated with an anti-bacterial/bacteria removing filter is used to remove food deposits, water drops, and crumbs.

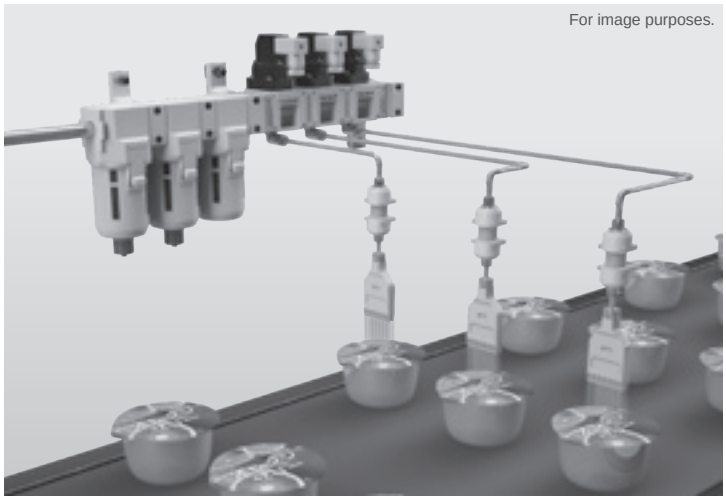
For image purposes.

Anti-bacterial/odor removing filter



2-port solenoid valve



Air nozzle flat type



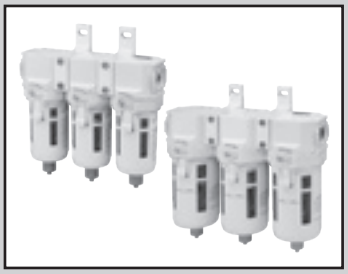

Material compatible with the Food Sanitation Act

FDA compliant materials

Anti-bacterial/bacteria-removing filter combination

SFC307/SFC407-FP2 Series

● Port size: 1/4 to 1/2

RoHS CAD

Specifications

1 MPa ≈ 145.0 psi, 1 MPa = 10 bar

Item			SFC307	SFC407
Components	(1)	Anti-bacterial pre-filter	SFC310	SFC410
	(2)	Anti-bacterial high performance filter	SFC320	SFC420
	(3)	Bacteria removing filter	SFC330	SFC430
Working fluid			Compressed air, nitrogen gas (N_2), and carbon dioxide (CO_2)	
Working pressure range		MPa	0.1 (≈15 psi, 1 bar) to 1.0 (≈145 psi, 10 bar)	
Proof pressure		MPa	1.5 (≈217 psi, 15 bar)	
Differential resistant pressure		MPa	0.5 (≈72 psi, 5 bar)	
Ambient/fluid temperatures		°C	5 (41°F) to 45 (113°F)	
Filtration		μm	0.01 (removal efficiency 99.99%)	
Max. processing flow rate *1		ℓ/min (ANR)	300	500
Port size		Rc, NPT, G	1/4 / 3/8	1/4 / 3/8 / 1/2
Weight		kg	0.96	1.61
Standard accessories			Maintenance label (included)	
Element replacement			1 year (6000 hours) or pressure drop 0.1 MPa	

*1: Use within the max. processing flow rate. This is the value when primary pressure is 0.7 MPa.

How to order

SFC307 - 10 ○ - X1 - FP2

- SFC307 → Ⓐ Model No.
- 10 → Ⓑ Port size
- ○ → Ⓒ Port thread
- X1 → Ⓓ Flow direction

Code	Description	Ⓐ Model No. SFC307	Ⓐ Model No. SFC407
Ⓑ Port size			
8	1/4	●	●
10	3/8	●	●
15	1/2		●
Ⓒ Port thread			
Blank	Rc thread	●	●
N	NPT thread	●	●
G	G thread	●	●
Ⓓ Flow direction			
Blank	Standard flow (left → right)	●	●
X1	Reverse flow (right → left)	●	●

● Replacement model No. for single element unit

Element model No. / Model	Anti-bacterial pre-filter element	Anti-bacterial high performance filter element	Bacteria removing filter element
SFC307	SFC310-ELEMENT	SFC320-ELEMENT	SFC330-ELEMENT
SFC407	SFC410-ELEMENT	SFC420-ELEMENT	SFC430-ELEMENT

Dimensions

● SFC307

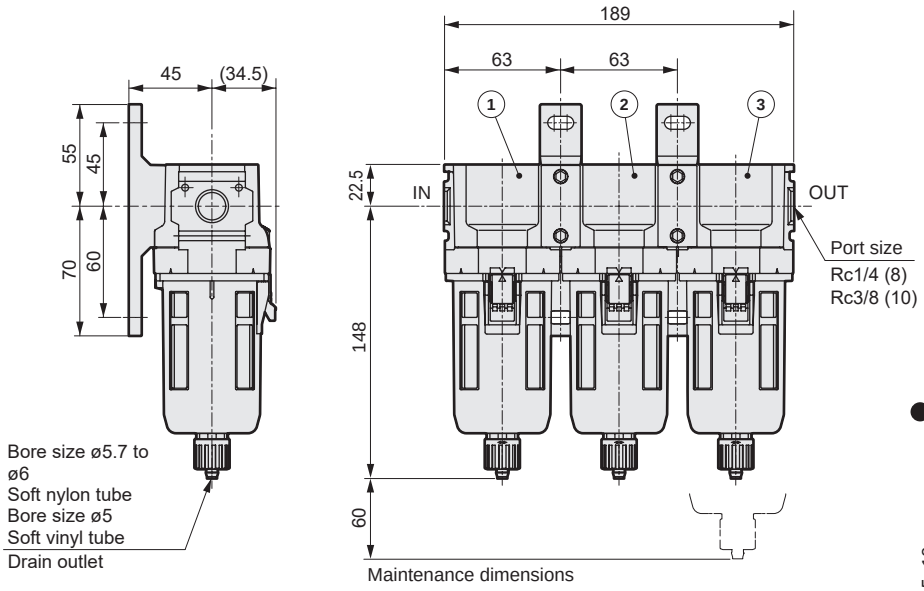

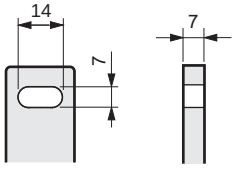

Enlarged view of bracket section

● Attachment
T-bracket
Model No.: SFB310-FP2

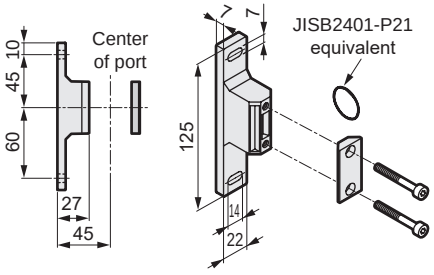

Material: Aluminum die-casting
Stainless steel mounting screws used

No.	Series
(1)	Anti-bacterial pre-filter
(2)	Anti-bacterial high performance filter
(3)	Bacteria removing filter

● SFC407

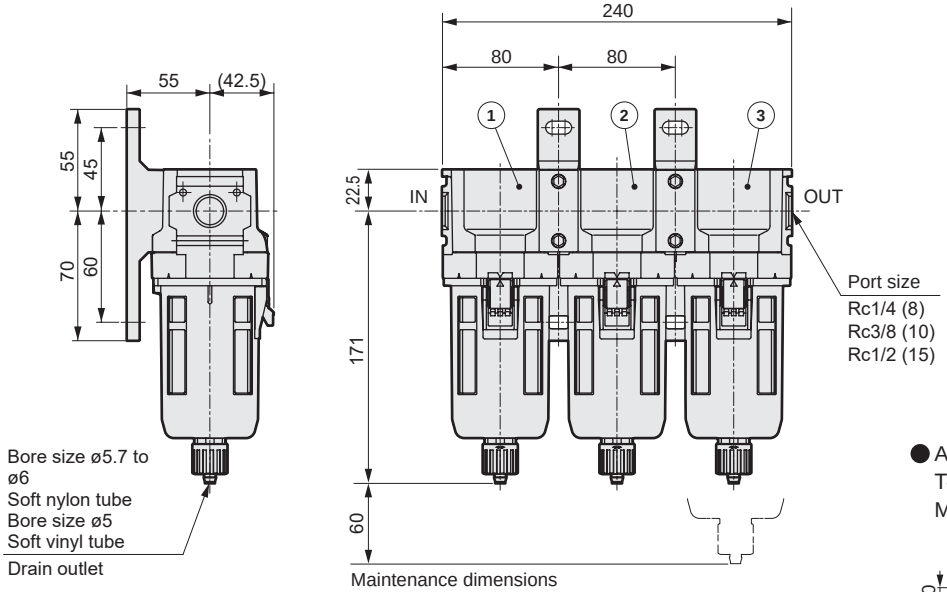

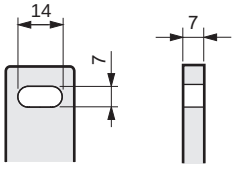

Enlarged view of bracket section

● Attachment
T-bracket
Model No.: SFB410-FP2

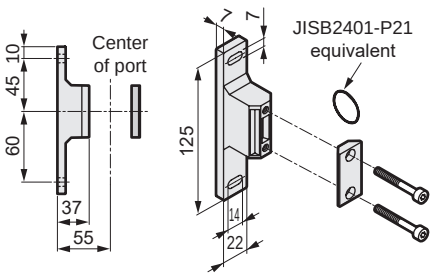

Material: Aluminum die-casting
Stainless steel mounting screws used

No.	Series
(1)	Anti-bacterial pre-filter
(2)	Anti-bacterial high performance filter
(3)	Bacteria removing filter



Material compatible with the Food Sanitation Act

FDA compliant materials

Anti-bacterial/bacteria-removing/odor removing filter combination

SFC309/SFC409-FP2 Series

● Port size: 1/4 to 1/2

RoHS CAD

Specifications

1 MPa ≈ 145.0 psi, 1 MPa = 10 bar

Item			SFC309	SFC409
Components	(1)	Anti-bacterial pre-filter	SFC310	SFC410
	(2)	Anti-bacterial high performance filter	SFC320	SFC420
	(3)	Odor removing filter	SFC340	SFC440
	(4)	Bacteria removing filter	SFC330	SFC430
Working fluid			Compressed air, nitrogen gas (N_2), and carbon dioxide (CO_2)	
Working pressure range		MPa	0.1 (≈15 psi, 1 bar) to 1.0 (≈145 psi, 10 bar)	
Proof pressure		MPa	1.5 (≈217 psi, 15 bar)	
Differential resistant pressure		MPa	0.5 (≈72 psi, 5 bar)	
Ambient/fluid temperatures		°C	5 (41°F) to 45 (113°F)	
Filtration		μm	0.01 (removal efficiency 99.99%)	
Secondary side oil concentration		mg/m³	0.003 or less *2	
Max. processing flow rate *1		ℓ/min (ANR)	300	500
Port size		Rc, NPT, G	1/4 / 3/8	1/4 / 3/8 / 1/2
Weight		kg	1.24	2.13
Standard accessories			Maintenance label (included)	
Element replacement			1 year (6000 hours) or pressure drop 0.1 MPa *3	

*1: Use within the max. processing flow rate. This is the value when primary pressure is 0.7 MPa.
*2: When an oil mist filter (M Series M type) is installed on the primary side. Be sure to install an air dryer and oil mist filter on the primary side.
*3: The replacement time is not a guaranteed value. The replacement time may be reduced depending on the product's working environment, usage conditions, etc.

How to order

SFC309 - 10 ( ) - X1 - FP2

- Ⓐ Model No.
- Ⓑ Port size
- Ⓒ Port thread
- Ⓓ Flow direction

Code	Description	Ⓐ Model No. SFC309	Ⓐ Model No. SFC409
Ⓑ Port size			
8	1/4	●	●
10	3/8	●	●
15	1/2		●
Ⓒ Port thread			
Blank	Rc thread	●	●
N	NPT thread	●	●
G	G thread	●	●
Ⓓ Flow direction			
Blank	Standard flow (left → right)	●	●
X1	Reverse flow (right → left)	●	●

● Replacement model No. for single element unit

Element model No. / Model	Anti-bacterial pre-filter element	Anti-bacterial high performance filter element	Bacteria removing filter element	Odor removing filter element
SFC309	SFC310-ELEMENT	SFC320-ELEMENT	SFC330-ELEMENT	SFC340-ELEMENT
SFC409	SFC410-ELEMENT	SFC420-ELEMENT	SFC430-ELEMENT	SFC440-ELEMENT

Dimensions

● SFC309

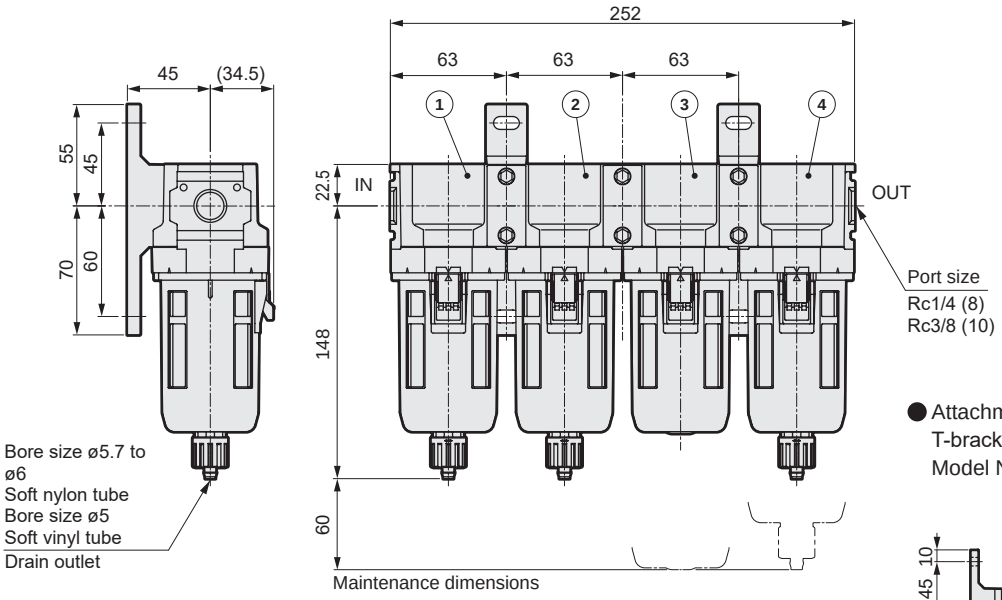

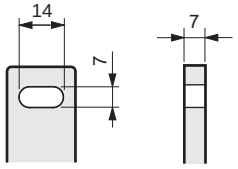

Enlarged view of bracket section

● Attachment
T-bracket
Model No.: SFB310-FP2

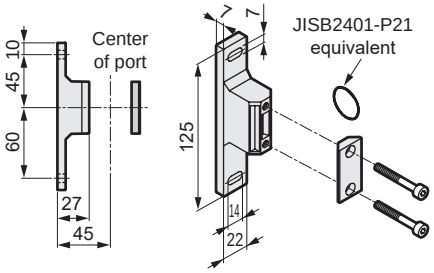

Material: Aluminum die-casting
Stainless steel mounting screws used

No.	Series
(1)	Anti-bacterial pre-filter
(2)	Anti-bacterial high performance filter
(3)	Odor removing filter
(4)	Bacteria removing filter

● SFC409

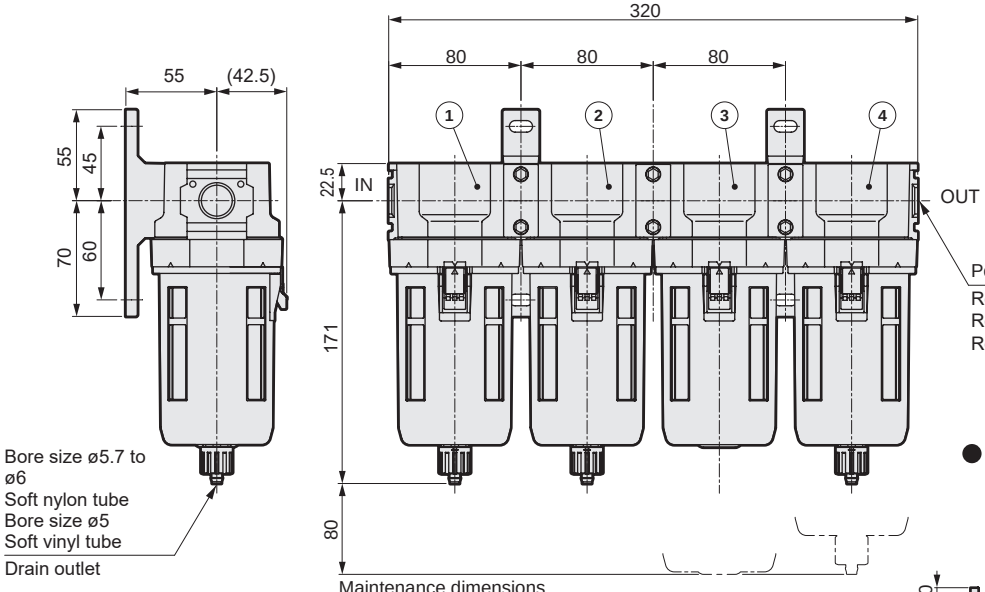

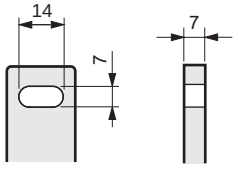

Enlarged view of bracket section

● Attachment
T-bracket
Model No.: SFB410-FP2

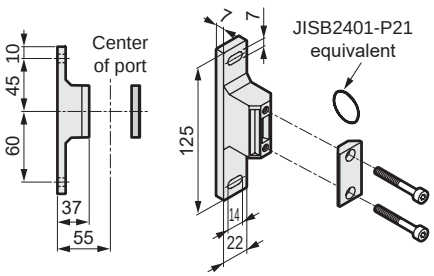

Material: Aluminum die-casting
Stainless steel mounting screws used

No.	Series
(1)	Anti-bacterial pre-filter
(2)	Anti-bacterial high performance filter
(3)	Odor removing filter
(4)	Bacteria removing filter



Material compatible with the Food Sanitation Act

FDA compliant materials

Anti-bacterial combination

SFC306/SFC406/SFC806-FP2 Series

● Port size: 1/4 to 1

RoHS CAD

Specifications

1 MPa ≈ 145.0 psi, 1 MPa = 10 bar

Item			SFC306	SFC406	SFC806
Components	(1)	Anti-bacterial pre-filter	SFC310	SFC410	SFC810
	(2)	Anti-bacterial high performance filter	SFC320	SFC420	SFC820
Working fluid			Compressed air, nitrogen gas (N_2), and carbon dioxide (CO_2)		
Working pressure range		MPa	0.1 (≈15 psi, 1 bar) to 1.0 (≈145 psi, 10 bar)		
Proof pressure		MPa	1.5 (≈217 psi, 15 bar)		
Ambient/fluid temperatures		°C	5 (41°F) to 45 (113°F)		
Filtration		μm	0.1 (removal efficiency 99% and over)		
Max. processing flow rate *1		ℓ/min (ANR)	360	700	2200
Port size		Rc, NPT, G	1/4 / 3/8	1/4 / 3/8 / 1/2	3/4 / 1
Weight		kg	0.62	1.06	2.7
Standard accessories			Maintenance label (included)		
Element replacement			1 year (6000 hours) or pressure drop 0.1 MPa		

*1: Use within the max. processing flow rate. This is the value when primary pressure is 0.7 MPa.

How to order

SFC306 - 10 ( ) - X1 - FP2

- SFC306 → Ⓐ Model No.
- 10 → Ⓑ Port size
- ( ) → Ⓒ Port thread
- X1 → Ⓓ Flow direction

Code	Description	Ⓐ Model No. SFC306	SFC406	SFC806
Ⓑ Port size				
8	1/4	●	●	
10	3/8	●	●	
15	1/2		●	
20	3/4			●
25	1			●
Ⓒ Port thread				
Blank	Rc thread	●	●	●
N	NPT thread	●	●	●
G	G thread	●	●	●
Ⓓ Flow direction				
Blank	Standard flow (left → right)	●	●	●
X1	Reverse flow (right → left)	●	●	●

● Replacement model No. for single element unit

Element model No. / Model	Anti-bacterial pre-filter element	Anti-bacterial high performance filter element
SFC306	SFC310-ELEMENT	SFC320-ELEMENT
SFC406	SFC410-ELEMENT	SFC420-ELEMENT
SFC806	SFC810-ELEMENT	SFC820-ELEMENT

Dimensions

● SFC306/SFC406

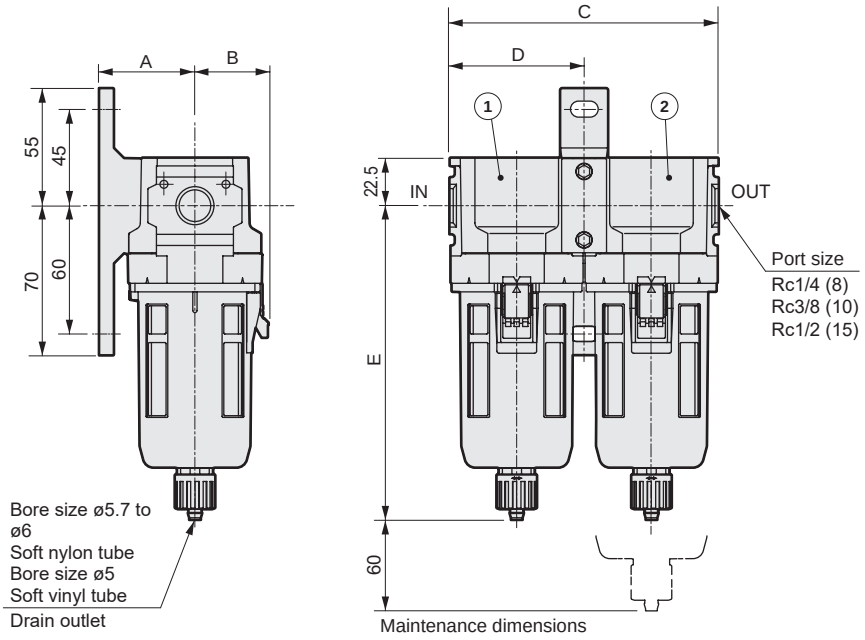

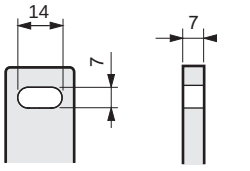

Enlarged view of bracket section

● Attachment
T-bracket
Model No.: SFB310-FP2
(Applicable model: SFC306)
SFB410-FP2
(Applicable model: SFC406)

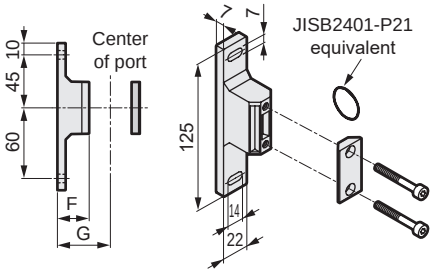

No.	Series
(1)	Anti-bacterial pre-filter
(2)	Anti-bacterial high performance filter

Model No.	A	B	C	D	E	F	G
SFC306	45	34.5	126	63	148	27	45
SFC406	55	42.5	160	80	171	37	55

Material: Aluminum die-casting
Stainless steel mounting screws used

● SFC806

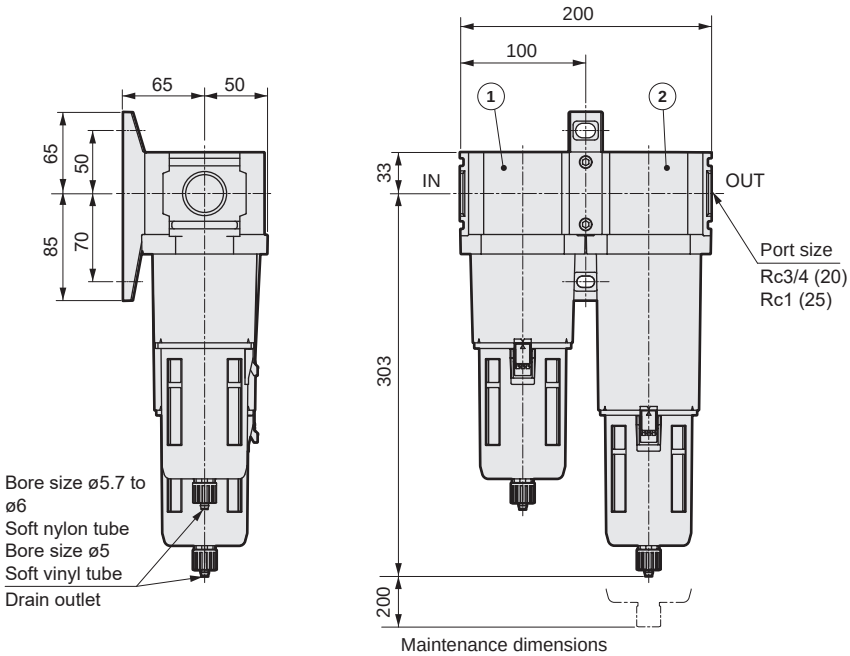

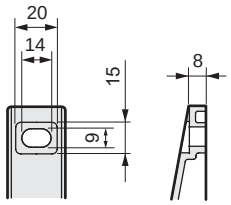

Enlarged view of bracket section

● Attachment
T-bracket
Model No.: SFB810-FP2

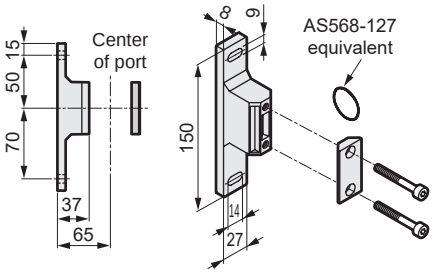

No.	Series
(1)	Anti-bacterial pre-filter
(2)	Anti-bacterial high performance filter

Material: Aluminum die-casting
Stainless steel mounting screws used



Material compatible with the Food Sanitation Act

FDA compliant materials

Anti-bacterial/odor removing filter combination

SFC308/SFC408/SFC808-FP2 Series

● Port size: 1/4 to 1

RoHS CAD

Specifications

1 MPa ≈ 145.0 psi, 1 MPa = 10 bar

Item			SFC308	SFC408	SFC808
Components	(1)	Anti-bacterial pre-filter	SFC310	SFC410	SFC810
	(2)	Anti-bacterial high performance filter	SFC320	SFC420	SFC820
	(3)	Odor removing filter	SFC340	SFC440	SFC840
Working fluid			Compressed air, nitrogen gas (N_2), and carbon dioxide (CO_2)		
Working pressure range		MPa	0.1 (≈15 psi, 1 bar) to 1.0 (≈145 psi, 10 bar)		
Proof pressure		MPa	1.5 (≈217 psi, 15 bar)		
Ambient/fluid temperatures		°C	5 (41°F) to 45 (113°F)		
Filtration		μm	0.1 (removal efficiency 99% and over)		
Secondary side oil concentration		mg/m^3	0.003 or less *2		
Max. processing flow rate *1		ℓ/min (ANR)	360	700	2200
Port size		Rc, NPT, G	1/4 / 3/8	1/4 / 3/8 / 1/2	3/4 / 1
Weight		kg	0.96	1.61	4.2
Standard accessories			Maintenance label (included)		
Element replacement			1 year (6000 hours) or pressure drop 0.1 MPa *3		

*1: Use within the max. processing flow rate. This is the value when primary pressure is 0.7 MPa.
*2: When an oil mist filter (M Series M type) is installed on the primary side. Be sure to install an air dryer and oil mist filter on the primary side.
*3: The replacement time is not a guaranteed value. The replacement time may be reduced depending on the product's working environment, usage conditions, etc.

How to order

SFC308 - **10** ( ) - **X1** - **FP2**

- **SFC308**: Ⓐ Model No.
- **10**: Ⓑ Port size
- ( ): Ⓒ Port thread
- **X1**: Ⓓ Flow direction
- **FP2**

Code	Description	Ⓐ Model No. SFC308	SFC408	SFC808
Ⓑ Port size				
8	1/4	●	●	
10	3/8	●	●	
15	1/2		●	
20	3/4			●
25	1			●
Ⓒ Port thread				
Blank	Rc thread	●	●	●
N	NPT thread	●	●	●
G	G thread	●	●	●
Ⓓ Flow direction				
Blank	Standard flow (left → right)	●	●	●
X1	Reverse flow (right → left)	●	●	●

● Replacement model No. for single element unit

Element model No. / Model	Anti-bacterial pre-filter element	Anti-bacterial high performance filter element	Odor removing filter element
SFC308	SFC310-ELEMENT	SFC320-ELEMENT	SFC340-ELEMENT
SFC408	SFC410-ELEMENT	SFC420-ELEMENT	SFC440-ELEMENT
SFC808	SFC810-ELEMENT	SFC820-ELEMENT	SFC840-ELEMENT

Dimensions

● SFC308/SFC408

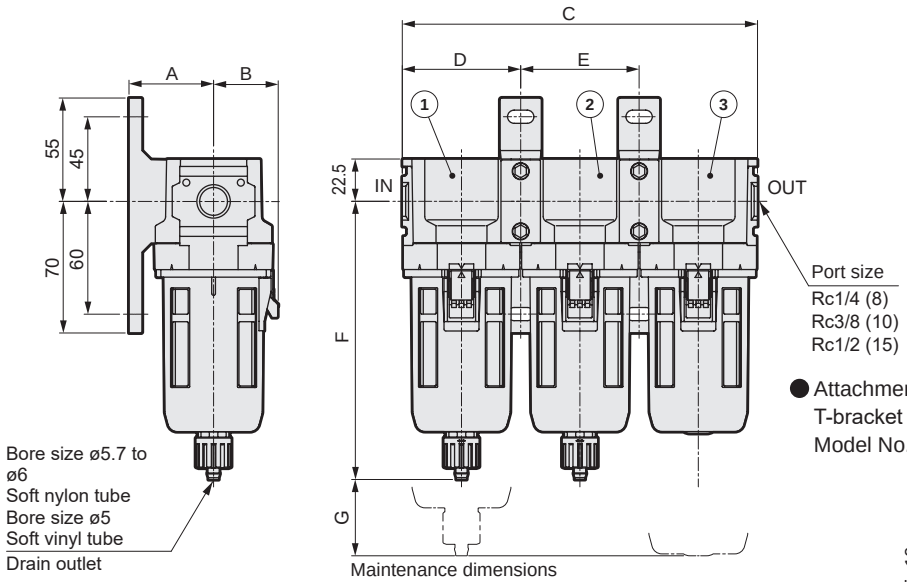

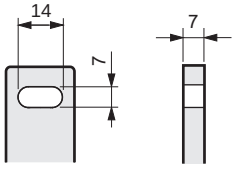

Enlarged view of bracket section

● Attachment
T-bracket
Model No.: SFB310-FP2 (Compatible model: SFC308)
SFB410-FP2 (Applicable model: SFC408)

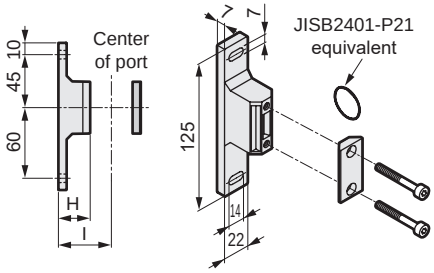

Material: Aluminum die-casting
Stainless steel mounting screws used

No.	Series
(1)	Anti-bacterial pre-filter
(2)	Anti-bacterial high performance filter
(3)	Odor removing filter

Model No.	A	B	C	D	E	F	G	H	I
SFC308	45	(34.5)	189	63	63	148	60	27	45
SFC408	55	(42.5)	240	80	80	171	80	37	55

● SFC808

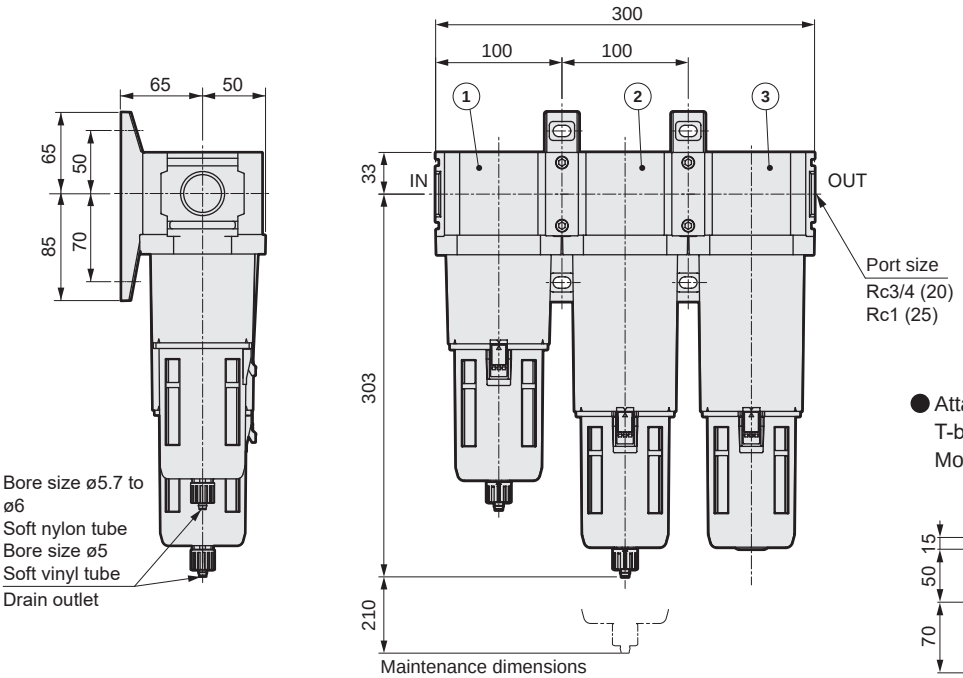

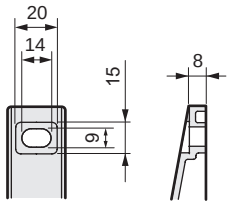

Enlarged view of bracket section

● Attachment
T-bracket
Model No.: SFB810-FP2

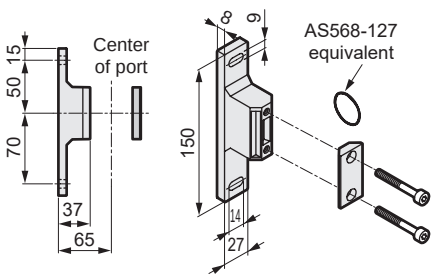

Material: Aluminum die-casting
Stainless steel mounting screws used

No.	Series
(1)	Anti-bacterial pre-filter
(2)	Anti-bacterial high performance filter
(3)	Odor removing filter



Material compatible with the Food Sanitation Act

FDA compliant materials

Anti-bacterial pre-filter

SFC310/SFC410/SFC810-FP2 Series

● Port size: 1/4 to 1

RoHS CAD

Specifications

1 MPa ≈ 145.0 psi, 1 MPa = 10 bar

Item		SFC310	SFC410	SFC810
Working fluid		Compressed air, nitrogen gas (N_2), and carbon dioxide (CO_2)		
Working pressure range	MPa	0.1 (≈15 psi, 1 bar) to 1.0 (≈145 psi, 10 bar)		
Proof pressure	MPa	1.5 (≈217 psi, 15 bar)		
Ambient/fluid temperatures	°C	5 (41°F) to 45 (113°F)		
Filtration	μm	5 (removal efficiency 90% and over)		
Max. processing flow rate *1	ℓ/min (ANR)	360	700	2200
Port size	Rc, NPT, G	1/4 / 3/8	1/4 / 3/8 / 1/2	3/4 / 1
Weight	kg	0.28	0.52	1.16
Standard accessories		Maintenance label (included)		
Element replacement		1 year (6000 hours) or pressure drop 0.1 MPa		

*1: Use within the max. processing flow rate. This is the value when primary pressure is 0.7 MPa.

How to order

SFC310 - 10 ( ) - X1 - FP2

- SFC310 — Ⓐ Model No.
- 10 — Ⓑ Port size
- ( ) — Ⓒ Port thread
- X1 — Ⓓ Flow direction

Code	Description	Ⓐ Model No. SFC310	SFC410	SFC810
Ⓑ Port size				
8	1/4	●	●	
10	3/8	●	●	
15	1/2		●	
20	3/4			●
25	1			●
Ⓒ Port thread				
Blank	Rc thread	●	●	●
N	NPT thread	●	●	●
G	G thread	●	●	●
Ⓓ Flow direction				
Blank	Standard flow (left → right)	●	●	●
X1	Reverse flow (right → left)	●	●	●

● Replacement model No. for single element unit

Element model No. / Model	Anti-bacterial pre-filter element
SFC310	SFC310-ELEMENT
SFC410	SFC410-ELEMENT
SFC810	SFC810-ELEMENT

Flow characteristics

● SFC310

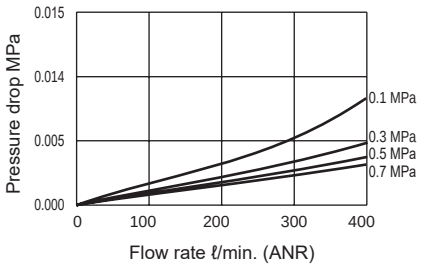

● SFC410

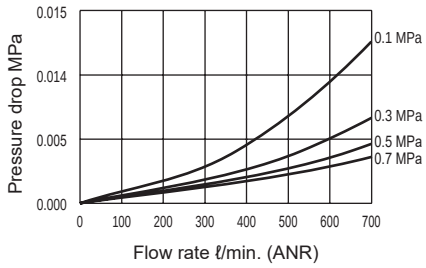

● SFC810

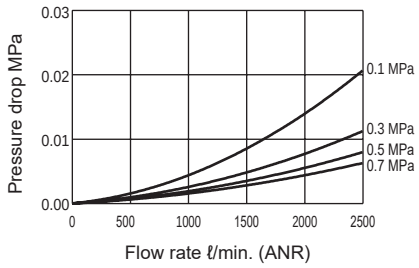

Internal structure and parts list

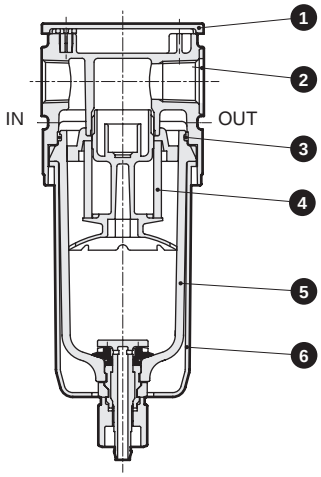

No.	Part name	Material		
		SFC310	SFC410	SFC810
1	Plate cover	ABS resin		
2	Body	Aluminum alloy die-casting		
3	O-ring	Fluoro rubber		
4	Element	Polyethylene, polypropylene, etc.		
5	Bowl	Polyamide resin		
6	Bowl guard	Polyamide resin		
7	Drain cock	Polyacetal resin		

Dimensions

● SFC310, SFC410

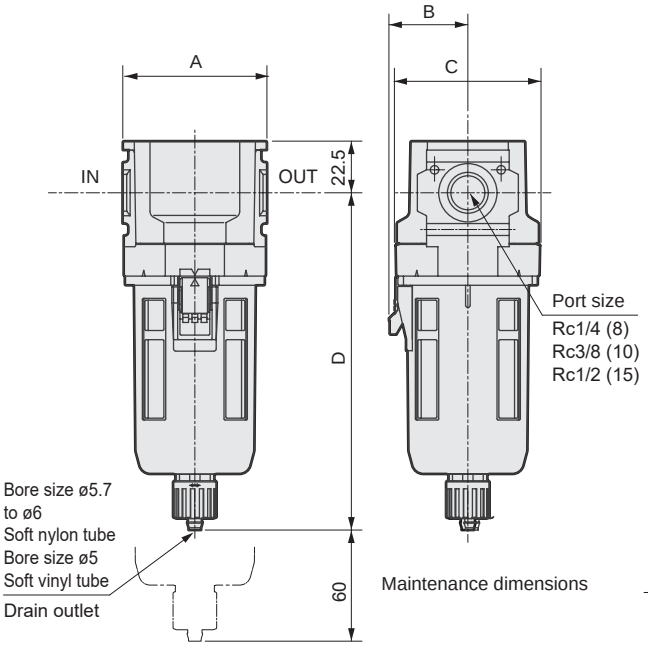

● SFC810

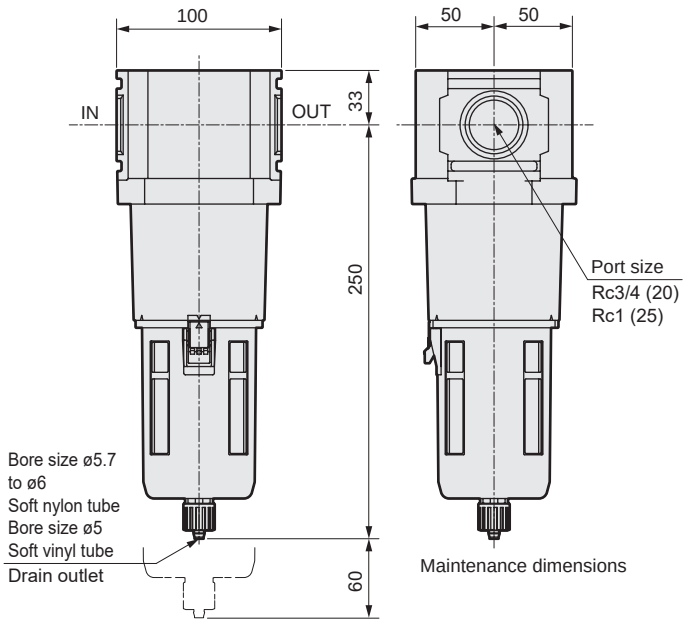

Model No.	A	B	C	D
SFC310	63	34.5	63	148
SFC410	80	42.5	79	171



Material compatible with the Food Sanitation Act

FDA compliant materials

Anti-bacterial high performance filter

SFC320/SFC420/SFC820-FP2 Series

● Port size: 1/4 to 1

RoHS CAD

Specifications

1 MPa ≈ 145.0 psi, 1 MPa = 10 bar

Item		SFC320	SFC420	SFC820
Working fluid		Compressed air, nitrogen gas (N_2), and carbon dioxide (CO_2)		
Working pressure range	MPa	0.1 (≈15 psi, 1 bar) to 1.0 (≈145 psi, 10 bar)		
Proof pressure	MPa	1.5 (≈217 psi, 15 bar)		
Ambient/fluid temperatures	°C	5 (41°F) to 45 (113°F)		
Filtration	μm	0.1 (removal efficiency 99% and over)		
Max. processing flow rate *1	ℓ/min (ANR)	360	700	2200
Port size	Rc, NPT, G	1/4 / 3/8	1/4 / 3/8 / 1/2	3/4 / 1
Weight	kg	0.28	0.52	1.35
Standard accessories		Maintenance label (included)		
Element replacement		1 year (6000 hours) or pressure drop 0.1 MPa		

*1: Use within the max. processing flow rate. This is the value when primary pressure is 0.7 MPa.

How to order

SFC320 - 10 ○ - X1 - FP2

- SFC320 — Ⓐ Model No.
- 10 — Ⓑ Port size
- ○ — Ⓒ Port thread
- X1 — Ⓓ Flow direction

Code	Description	Ⓐ Model No. SFC320	SFC420	SFC820
Ⓑ Port size				
8	1/4	●	●	
10	3/8	●	●	
15	1/2		●	
20	3/4			●
25	1			●
Ⓒ Port thread				
Blank	Rc thread	●	●	●
N	NPT thread	●	●	●
G	G thread	●	●	●
Ⓓ Flow direction				
Blank	Standard flow (left → right)	●	●	●
X1	Reverse flow (right → left)	●	●	●

● Replacement model No. for single element unit

Element model No. / Model	Anti-bacterial high performance filter element
SFC320	SFC320-ELEMENT
SFC420	SFC420-ELEMENT
SFC820	SFC820-ELEMENT

Flow characteristics

● SFC320

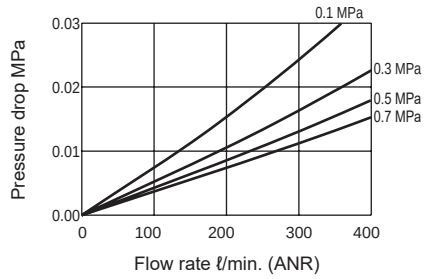

● SFC420

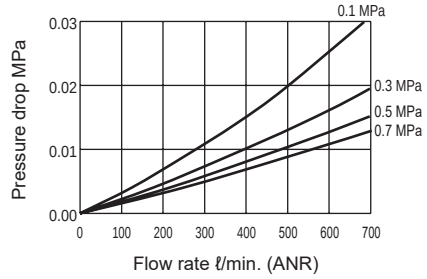

● SFC820

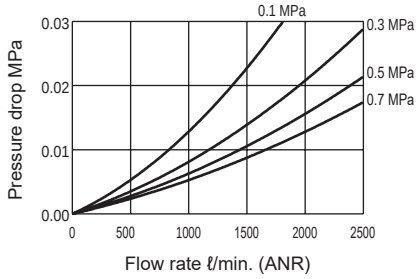

Internal structure and parts list

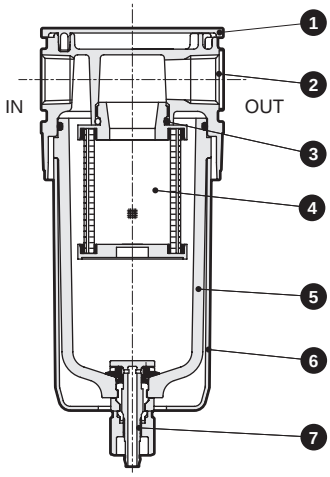

No.	Part name	Material		
		SFC320	SFC420	SFC820
1	Plate cover	ABS resin		
2	Body	Aluminum alloy die-casting		
3	O-ring	Fluoro rubber		
4	Element	Glass fiber, polypropylene		Glass fiber, PET, etc.
5	Bowl	Polyamide resin		
6	Bowl guard	Polyamide resin		
7	Drain cock	Polyacetal resin		

Dimensions

● SFC320, SFC420

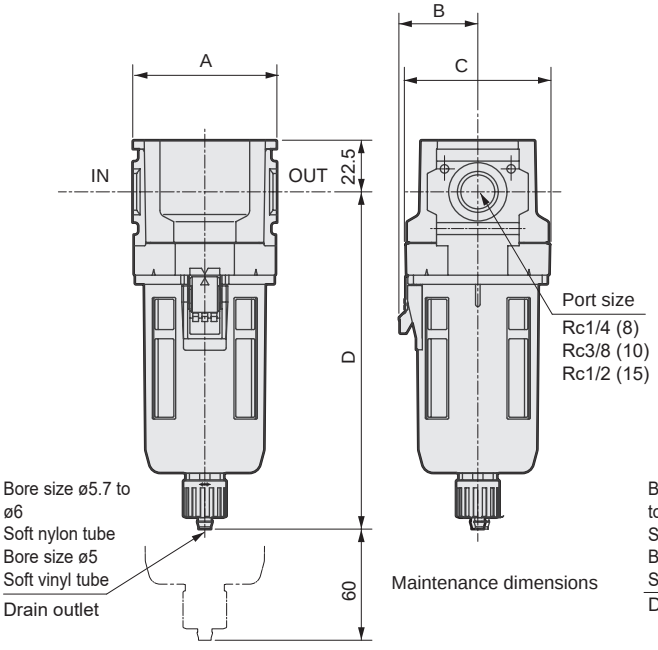

● SFC820

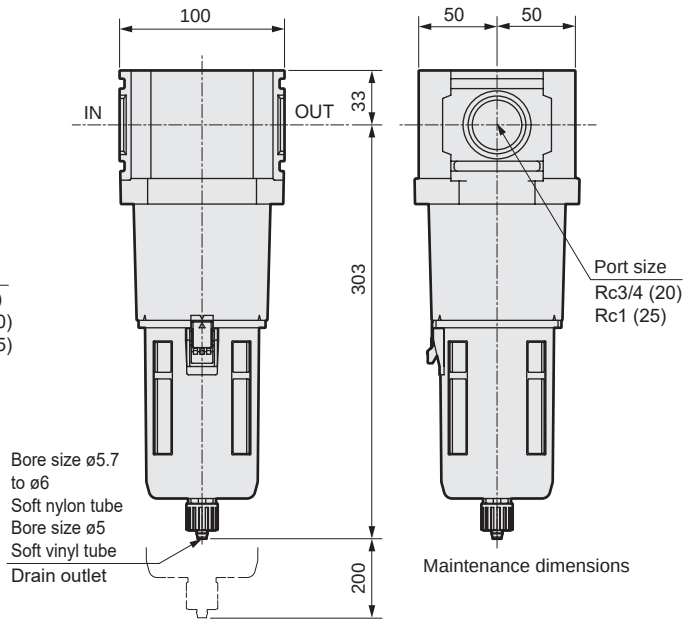

Model No.	A	B	C	D
SFC320	63	34.5	63	148
SFC420	80	42.5	79	171



Material compatible with the Food Sanitation Act

FDA compliant materials

Bacteria removing filter

SFC330/SFC430-FP2 Series

● Port size: 1/4 to 1/2

RoHS CAD

Specifications

1 MPa ≈ 145.0 psi, 1 MPa = 10 bar

Item		SFC330	SFC430
Working fluid		Compressed air, nitrogen gas (N_2), and carbon dioxide (CO_2)	
Working pressure range	MPa	0.1 (≈15 psi, 1 bar) to 1.0 (≈145 psi, 10 bar)	
Proof pressure	MPa	1.5 (≈217 psi, 15 bar)	
Differential resistant pressure	MPa	0.5 (≈72 psi, 5 bar)	
Ambient/fluid temperatures	°C	5 (41°F) to 45 (113°F)	
Filtration	μm	0.01 (removal efficiency 99.99%)	
Max. processing flow rate *1	ℓ/min (ANR)	300	500
Port size	Rc, NPT, G	1/4 / 3/8	1/4 / 3/8 / 1/2
Weight	kg	0.28	0.52
Standard accessories		Maintenance label (included)	
Element replacement		1 year (6000 hours) or pressure drop 0.1 MPa	

*1: Use within the max. processing flow rate. This is the value when primary pressure is 0.7 MPa.

How to order

SFC330 - **10** ( ) - **X1** - **FP2**

- Ⓐ Model No.
- Ⓑ Port size
- Ⓒ Port thread
- Ⓓ Flow direction

Code	Description	Ⓐ Model No. SFC330	Ⓐ Model No. SFC430
Ⓑ Port size			
8	Rc1/4	●	●
10	Rc3/8	●	●
15	Rc1/2		●
Ⓒ Port thread			
Blank	Rc thread	●	●
N	NPT thread	●	●
G	G thread	●	●
Ⓓ Flow direction			
Blank	Standard flow (left → right)	●	●
X1	Reverse flow (right → left)	●	●

● Replacement model No. for single element unit

Model \ Element model No.	Bacteria removing filter element
SFC330	SFC330-ELEMENT
SFC430	SFC430-ELEMENT

Flow characteristics

● SFC330

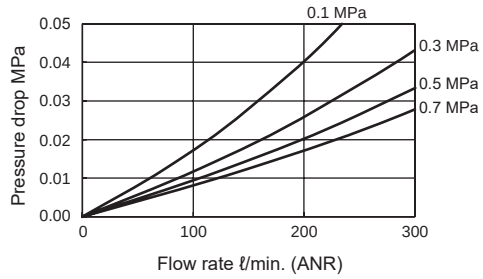

● SFC430

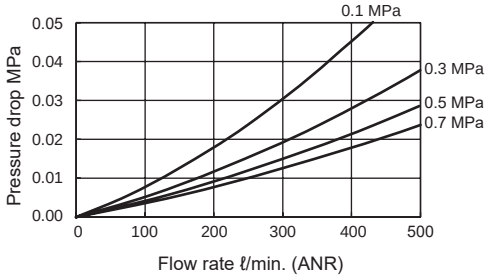

Internal structure and parts list

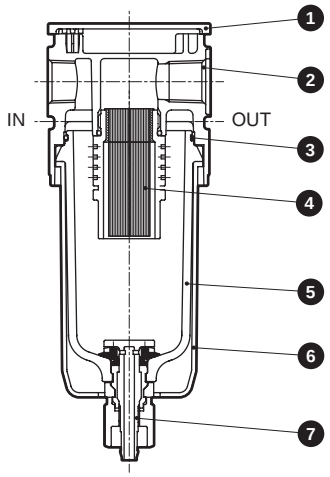

No.	Part name	Material	
		SFC330	SFC430
1	Plate cover	ABS resin	
2	Body	Aluminum alloy die-casting	
3	O-ring	Fluoro rubber	
4	Element	Polypropylene, urethane resin, clear polyamide resin	
5	Bowl	Polyamide resin	
6	Bowl guard	Polyamide resin	
7	Drain cock	Polyacetal resin	

Dimensions

● SFC330

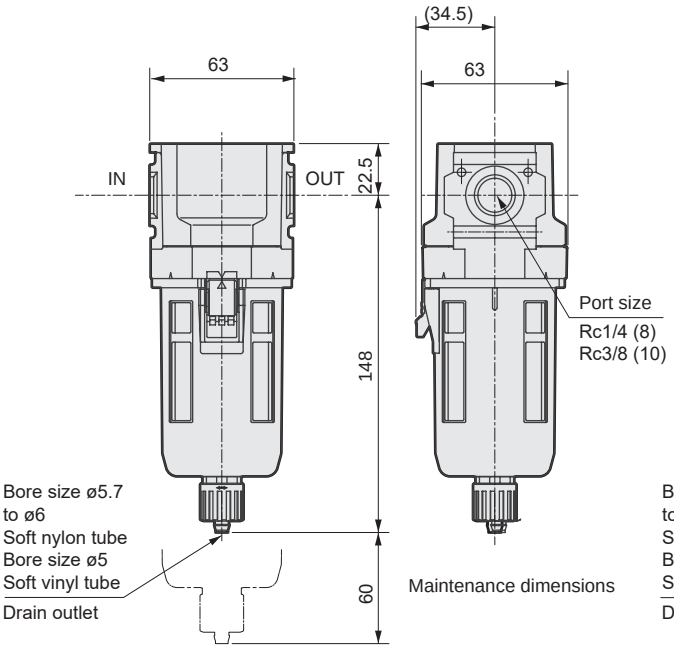

● SFC430

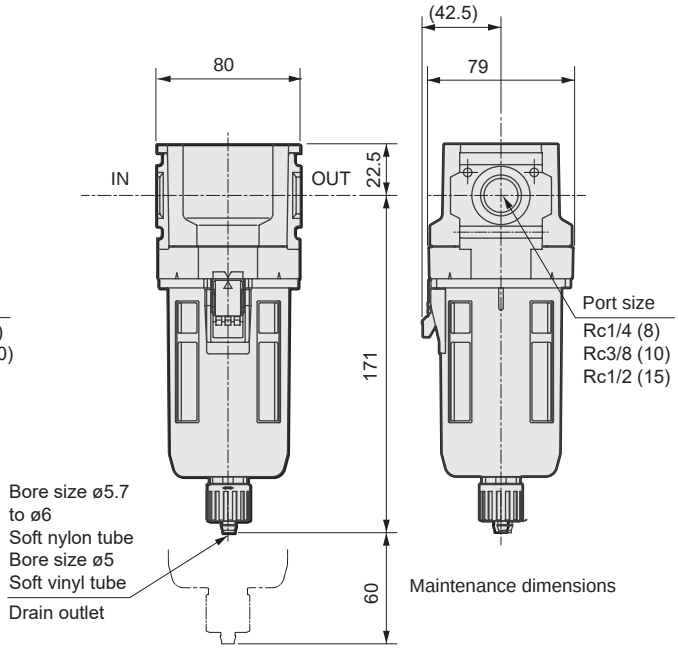



Material compatible with the Food Sanitation Act

FDA compliant materials

Odor removing filter

SFC340/SFC440/SFC840-FP2 Series

● Port size: 1/4 to 1

RoHS CAD

Specifications

1 MPa ≈ 145.0 psi, 1 MPa = 10 bar

Item		SFC340	SFC440	SFC840
Working fluid		Compressed air, nitrogen gas (N_2), and carbon dioxide (CO_2)		
Working pressure range	MPa	0.1 (≈15 psi, 1 bar) to 1.0 (≈145 psi, 10 bar)		
Proof pressure	MPa	1.5 (≈217 psi, 15 bar)		
Ambient/fluid temperatures	°C	5 (41°F) to 45 (113°F)		
Secondary side oil concentration	mg/m³	0.003 or less *2		
Max. processing flow rate *1	ℓ/min (ANR)	360	700	2200
Port size	Rc, NPT, G	1/4 / 3/8	1/4 / 3/8 / 1/2	3/4 / 1
Weight	kg	0.28	0.52	1.35
Standard accessories		Maintenance label (included)		
Element replacement		1 year (6000 hours) or pressure drop 0.1 MPa *3		

*1: Use within the max. processing flow rate. This is the value when primary pressure is 0.7 MPa.
*2: When an oil mist filter (M Series M type) is installed on the primary side. Be sure to install an air dryer and oil mist filter on the primary side.
*3: The replacement time is not a guaranteed value. The replacement time may be reduced depending on the product's working environment, usage conditions, etc.

How to order

SFC340 - 10 ( ) - X1 - FP2

- SFC340 → Ⓐ Model No.
- 10 → Ⓑ Port size
- ( ) → Ⓒ Port thread
- X1 → Ⓓ Flow direction

Code	Description	Ⓐ Model No. SFC340	SFC440	SFC840
Ⓑ Port size				
8	1/4	●	●	
10	3/8	●	●	
15	1/2		●	
20	3/4			●
25	1			●
Ⓒ Port thread				
Blank	Rc thread	●	●	●
N	NPT thread	●	●	●
G	G thread	●	●	●
Ⓓ Flow direction				
Blank	Standard flow (left → right)	●	●	●
X1	Reverse flow (right → left)	●	●	●

● Replacement model No. for single element unit

Element model No. / Model	Odor removing filter element
SFC340	SFC340-ELEMENT
SFC440	SFC440-ELEMENT
SFC840	SFC840-ELEMENT

Flow characteristics

● SFC340

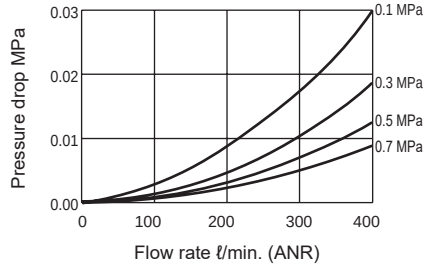

● SFC440

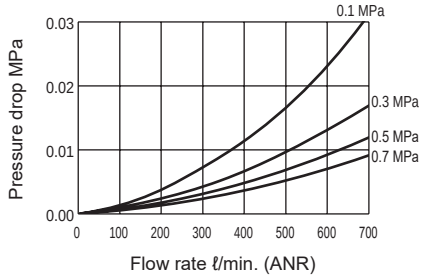

● SFC840

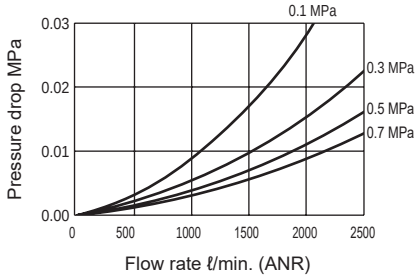

Internal structure and parts list

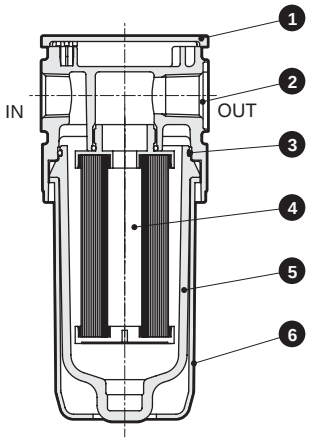

No.	Part name	Material		
		SFC340	SFC440	SFC840
1	Plate cover	ABS resin		
2	Body	Aluminum alloy die-casting		
3	O-ring	Fluoro rubber		
4	Element	Fiber activated carbon, PET		
5	Bowl	Polyamide resin		
6	Bowl guard	Polyamide resin		

Dimensions

● SFC340, SFC440

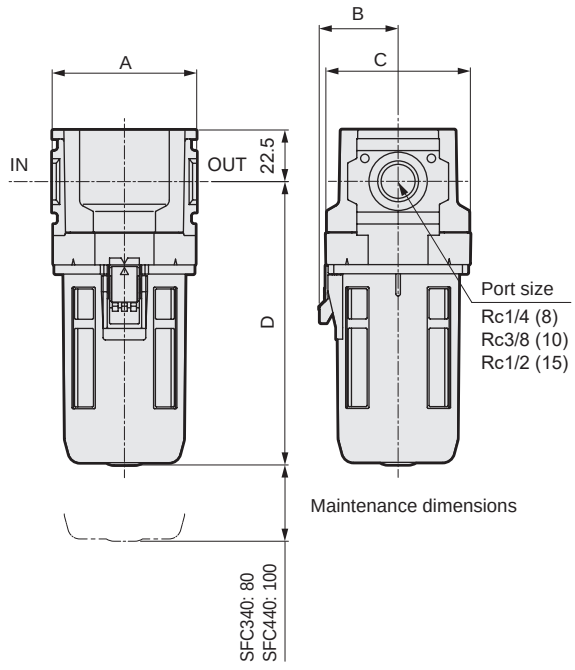

Model No.	A	B	C	D
SFC340	63	34.5	63	123.5
SFC440	80	42.5	79	149

● SFC840

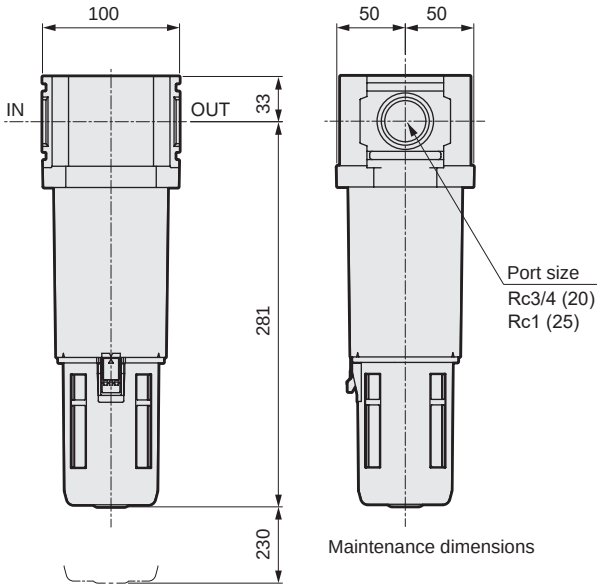

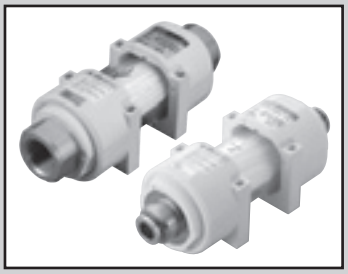

Bacteria removing filter/inline type

SFS10-FP2 Series

Material compatible with the Food Sanitation Act

FDA compliant materials

● Port size: Rc1/4, Rc3/8
Push-in fitting ø8, ø10, ø12

RoHS CAD

Specifications

1 MPa ≈ 145.0 psi, 1 MPa = 10 bar

Item	Resin		Stainless steel
	SFS10-(*1) (*2)		SFS10-(*1)(*2)-M
Working fluid	Compressed air, nitrogen gas (N_2), and carbon dioxide (CO_2)		
IN side bore size (*1) / OUT side bore size (*2)	Select from push-in fitting ø8, ø10, ø12, Rc1/4, Rc3/8		Select from Rc1/4 and Rc3/8
Proof pressure MPa	1.5 (≈217 psi, 15 bar)		2.25 (≈326 psi, 22 bar) (compressed air), 1.5 (≈217 psi, 15 bar) (N_2, CO_2)
Differential resistant pressure MPa	0.5 (≈72 psi, 5 bar)		
Working pressure MPa	-0.095 (≈-13 psi, 1 bar) to 0.99 (≈143 psi, 9 bar)		-0.095 (≈-13 psi, 1 bar) to 1.5 (≈217 psi, 15 bar) (compressed air), -0.095 (≈-13 psi, 1 bar) to 0.99 (≈143 psi, 9 bar) (N_2, CO_2)
Ambient/fluid temperatures °C	5 (41°F) to 45 (113°F)		
Filtration µm	0.01 (removal efficiency 99.99%)		
Processing flow rate ℓ/min (ANR)	300 to 400 *1		
Weight kg	Push-in fitting: 0.15	Thread: 0.11	0.5
Assembling/inspection/packaging	Integrated production in cleanroom		
Cleaning	Degreasing		
Element replacement	1 year (6000 hours) or pressure drop 0.1 MPa		

*1: Initial flow rate at primary pressure 0.7 MPa and pressure drop 0.03 MPa. (Differs according to port size.)

Flow characteristics

● SFS10-H8H8

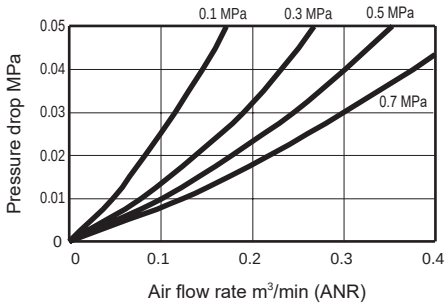

● SFS10-H10H10
● SFS10-88

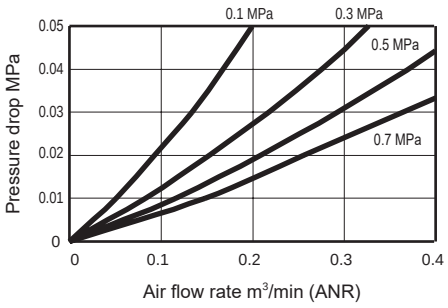

● SFS10-H12H12
● SFS10-1010

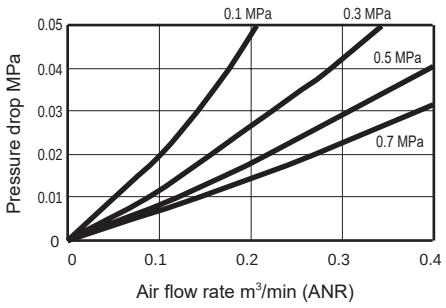

How to order

● Resin

SFS10 - H8 H8 - FP2

Model No.

Ⓐ IN side port size

Ⓐ IN side port size	
H8	ø8
H10	ø10
H12	ø12
8	Rc1/4
10	Rc3/8

Ⓑ OUT side port size

Ⓑ OUT side port size	
H8	ø8
H10	ø10
H12	ø12
8	Rc1/4
10	Rc3/8

● Stainless steel (made to order)

SFS10 - 8 8 - M - FP2

Model No.

Ⓐ IN side port size

Ⓐ IN side port size	
8	Rc1/4
10	Rc3/8

Ⓑ OUT side port size

Ⓑ OUT side port size	
8	Rc1/4
10	Rc3/8

*1: Two mounting screws (M3 x 40), two plain washers, and two spring washers are included with the product.

● Single unit model number for replacement element (1 element, 2 O-rings)

· For resin type: **SFS10-E** · Stainless steel type: **SFS10-E-M**

Internal structure and parts list

● Resin

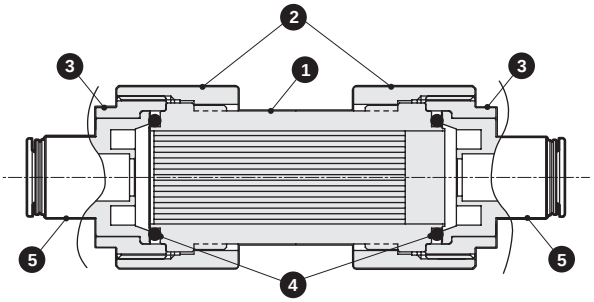

● Stainless steel

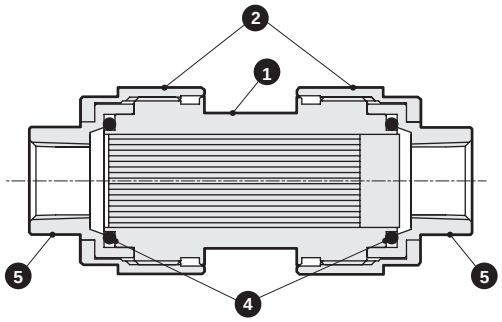

● Parts list

No.	Part name		Resin	Stainless steel
1	Element	Housing	Clear polyamide	Stainless steel
		Filter	Polypropylene	
		Filler material	Urethane rubber resin	
2	Body		Polyamide resin	Stainless steel
3	Plug		Polyamide resin	–
4	O-ring		Fluoro rubber	Fluoro rubber
5	Cartridge fitting (Port size ø8, ø10, ø12)		Copper alloy (nickel plating) Fluoro rubber Push ring: Stainless steel	–
	Adapter (Port size Rc1/4, Rc3/8)		Aluminum (Alumite treatment)	Stainless steel

Dimensions

CAD

● Resin

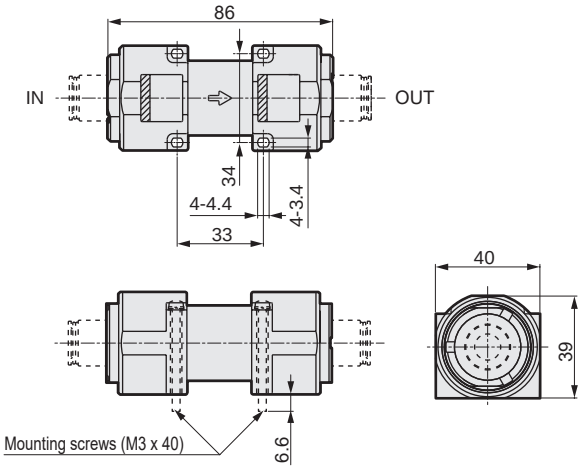

Connector No.	Port size	A	B
H8	ø8 push-in fitting	12	ø17.5
H10	ø10 push-in fitting	14.5	ø17.5
H12	ø12 push-in fitting	16	ø19.5
8	Rc1/4	11	–
10	Rc3/8	11	–

· Push-in fitting (ø8, ø10, ø12)

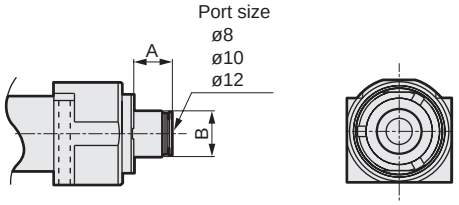

· Rc thread (Rc1/4, Rc3/8)

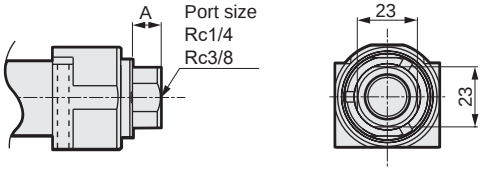

● Stainless steel

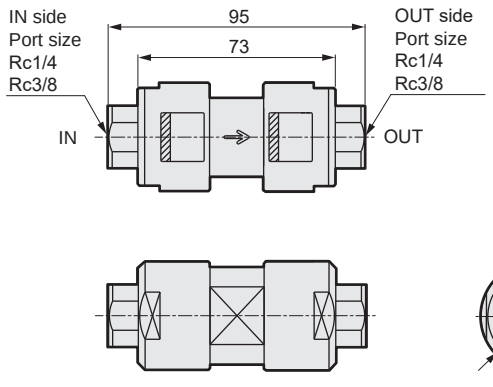

T-bracket set

● Model No.: SFB310-FP2 / SFB410-FP2 / SFB810-FP2

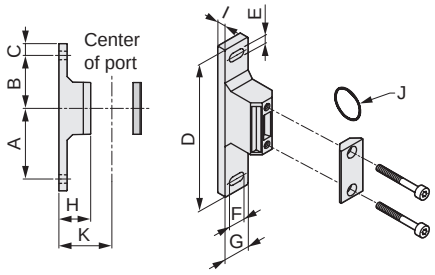

Model No.	Compatibility	A	B	C	D	E	F	G	H	I	J	K	Weight (kg)
SFB310-FP2	SFC3** Series	60	45	10	125	7	14	22	27	7	JISB2401-P21	45	0.086
SFB410-FP2	SFC4** Series	60	45	10	125	7	14	22	37	7	JISB2401-P21	55	0.094
SFB810-FP2	SFC8** Series	70	50	15	150	9	14	27	37	8	AS568-127	65	0.169

Material: Aluminum die-casting
Stainless steel mounting screws used

Joiner set

● Model No.: SFJ400-FP2
SFJ800-FP2

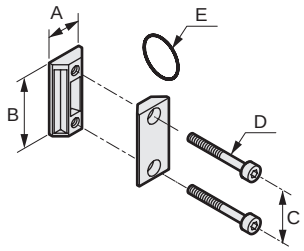

Model No.	Compatibility	A	B	C	D	E	Weight (kg)
SFJ400-FP2	SFC3** Series SFC4** Series	21	44	32	M5	JIS B2401-P21 equivalent	0.036
SFJ800-FP2	SFC8** Series	26	65	50	M6	AS568-127 equivalent	0.094

Material: Aluminum die-casting
Stainless steel mounting screws used

Distributor

How to order

SFD401 - 00 - 8 ○ - B31 - FP2

Ⓐ Model No.
Ⓑ Port size
Ⓒ Port thread
Ⓓ T-bracket

Code	Description
Ⓐ Model No.	
SFD401	For SFC3** Series For SFC4** Series
SFD801	For SFC8** Series

Ⓑ Port size	SFD401	SFD801
8	●	
10	●	
15	●	
20		●
25		●

Ⓒ Port thread	
Blank	Rc thread
N	NPT thread
G	G thread

Ⓓ T-bracket	
Blank	None
B31	SFC3** Series
B41	SFC4** Series
B81	SFC8** Series

Precautions for model No. selection

*1: The joiner set (joiner, bolt, O-ring) and one gasket is included as standard. *2: Contact CKD regarding 2-way branching.

Assembly method

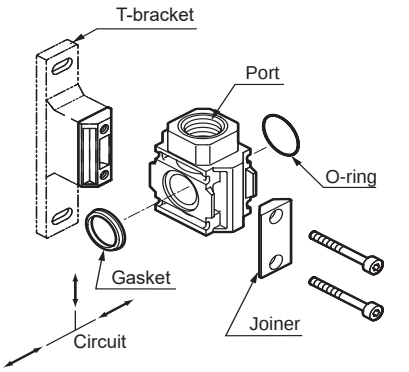

*1: Insert the O-ring when mounting on the primary side, and the gasket when mounting on the secondary side for the air flow.
*2: When inserting the O-ring and gasket during assembly, the O-ring and gasket must not be bent.

Material: Aluminum die-casting
Stainless steel mounting screws used

Dimensions

● SFD401-00-*-*-FP2

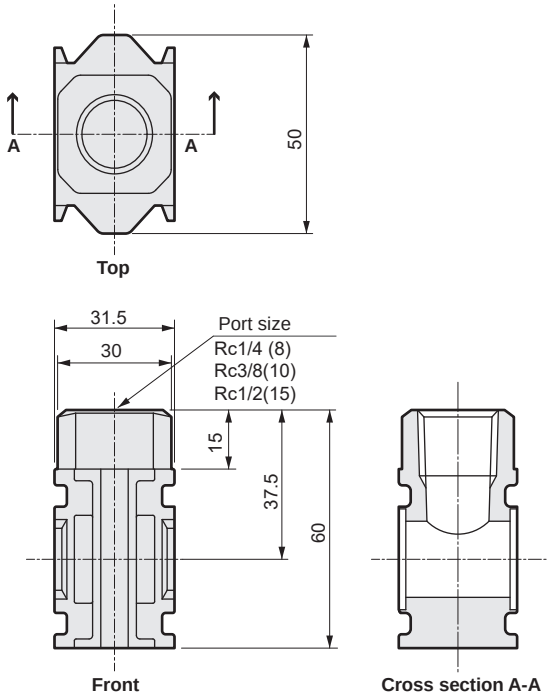

● SFD801-00-*-*-FP2

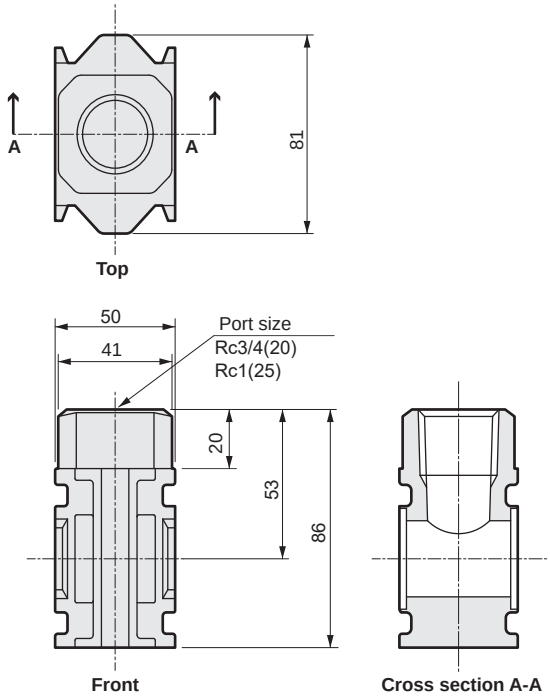

Dimensions and applicationsapplications

Pipe adaptor set

● Model No.:SFA400-*-FP2
SFA800-*-FP2

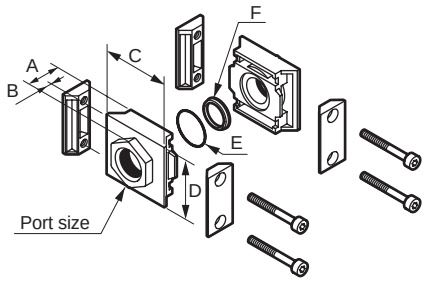

Material:Aluminum die-casting
Stainless steel mounting screws used

Model No.	Port size	A	B	C	D	E (O-ring)	F (gasket)	Weight (kg)
SFA400-8*-FP2	1/4	20	6	50	45	JISB2401 P21 or equiv. 1 pc.	1 pc.	0.16
SFA400-10*-FP2	3/8							
SFA400-15*-FP2	1/2							
SFA800-20*-FP2	3/4	35 (38)	15 (18)	81	66	AS568-127 or equiv. 1 pc.	1 pc.	0.53
SFA800-25*-FP2	1							
SFA800-32*-FP2	1 1/4							

* Blank: Rc thread, N:NPT thread, G: G thread

Note: Numbers in ( ) are for $1^1/_4$

Anti-bacterial/bacteria-removing/odor removing filter

Safety Precautions

Be sure to read this section before use.
For general precautions for pneumatic components, refer to Intro Page 63.
Although the above general catalog states that products are not applicable for equipment or applications with direct contact with beverages/foodstuffs, the FP2 Series products can be used in such applications as long as they are within the range of the product specifications.

Design/selection

⚠WARNING

■ The anti-bacterial filter has an anti-bacterial effect on bacteria attached to internal filter elements, suppressing bacteria growth. The working fluid has no bacteria-reducing effects.
*Anti-bacterial activity value, which represents the anti-bacterial effect, is an actual value from CKD's prescribed conditions.

■ The sterilizing filter removes and reduces the bacteria in the working fluid, but it does not kill all bacteria. It also does not remove viruses. LRV, which represents bacteria-removing effect, is an actual value from CKD's prescribed conditions.

■ This product is designed for industrial use. Do not use in any equipment or circuit that concerns human life.

■ This product tolerates a small amount of leakage which does not affect performance.

■ For use with nitrogen gas (N_2) or carbon dioxide (CO_2), provide sufficient ventilation.

■ This filter traps waste and bacteria in the working fluid and provides clean working fluid to the secondary side. Anti-bacterial and bacteria removing functions are not added to the working fluid itself.

■ It cannot be used in environments containing sodium hypochlorite, synthetic oil, organic solvents, chemicals, coolant, screw locking agent, leak detection solutions, hot water, etc., or where these substances may come in contact with the product. Refer to page 249 for details on plastic bowl and transparent case chemical resistance.

■ Piping load torque
Avoid piping fixed with a single support, as this can result in excessive force and lead to damage.
[Combination, module type]
Avoid applying piping load or torque to the body or pipes.

Series	SFC3**	SFC4**	SFC8**
Max. torque N·m	50	50	100

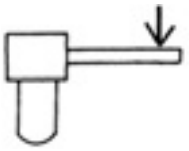

■ Before using this product, carefully check compatibility of the material with its use conditions and environment.

⚠CAUTION

■ Check the working circuit and working fluid.
To prevent drop in filter performance, install the dryer, air filter and oil mist filter on the primary side, and remove water or oil.

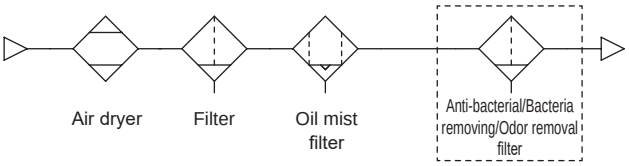

■ Installation order for anti-bacterial/bacteria-removing/odor removing filter
We recommend the use of the bacteria-removing unit as the final filter before the compressed air/gas contact foodstuffs.



■ Do not exceed maximum working or differential pressure.
Otherwise, the product and element may be damaged.

■ Do not create flow in excess of the max. processing flow rate.
Doing so may degrade the filtration accuracy and damage the element.

■ This device cannot be used as an absolute filter.

■ Do not use where the IN/OUT pressure difference exceeds 0.1 MPa.
A sudden supply of fluid to the filter (such as air blow by releasing the secondary side to the atmosphere, etc.) may reduce the removal efficiency. In this case, install a restriction valve on the filter's IN side to keep the pressure difference to 0.1 MPa or less. Consult with CKD about attaching differential pressure gauge GA400.

■ High drain levels
Install the air dryer and drain separator before the anti-bacterial/bacteria removing filter.
If there is a lot of moisture from the compressor, hot and highly humid air could shorten the device's life or result in corrosion.

■ Water-lubricated compressor circuit
Take measures to prevent chlorine-based substances from entering the compressed air.

■ The odor removing filter uses activated carbon to apply suction to oil vapor.
Be sure to install an oil mist filter (M Series M type) on the primary side, and remove oil mist in advance.

■ The odor removing filter uses suction to remove the oil vapor in compressed air (nitrogen gas, carbon dioxide). Activated carbon suction is not equally effective with all substances, so that it will not completely eliminate all odors.

■ The odor removing filter does not have anti-bacterial or bacteria-removing functions.

Mounting, installation and adjustment

⚠ WARNING

■ Prevent the generated ozone from passing through the filter.
Otherwise, the filter element may be degraded. Take especial care when using an ozone generator (e.g., ionizer) in combination.
(1) Do not install in the upstream portion of the filter.
(2) When installing downstream of the filter, stop air while static electricity is neutralized since generated ozone may flow back.

■ Avoid installing this product where it is subject to direct ultraviolet.

■ If the hollow fiber membrane in the bacteria removing filter suffers oxidative degradation from ozone or ultraviolet in the fluid, it may be damaged and allow flow over to the secondary side. Implement periodic inspections and exchange.
Consult the graph below for standard replacement times.

Relation between ozone concentration and integration quantity
Filter element replacement period

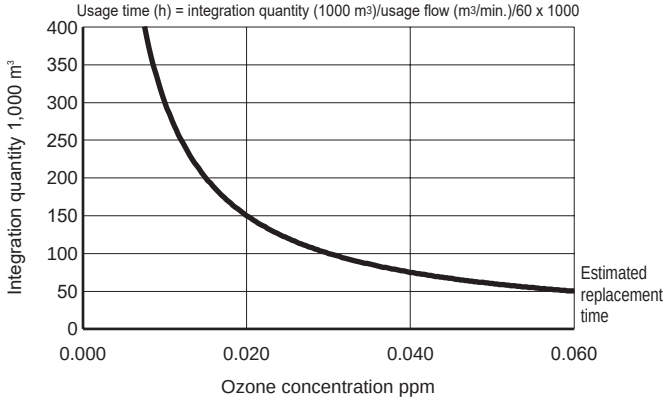

⚠ CAUTION

■ Match the flow direction and the direction of the arrow on the product for correct connection.

■ Securing maintenance space
Secure sufficient space for maintenance and inspection.

■ After attaching the pipes, flush and clean them before use.
Dirt or foreign matter remaining in the piping will deteriorate product performance.

■ Make sure that no foreign matter enters the pipes when connecting the pipes and fittings.
When screwing in piping or fittings, check that swarf from port threads or sealant does not get inside. Trash or foreign matter remaining in the piping will cause product performance to deteriorate.
In particular, if swarf from the OUT side port thread on the last-installed unit is produced, that swarf will be blown through too.
During piping, tighten at or below the torque determined in the catalog, and then flush thoroughly before use.

■ Install the drain cock downward and vertically.

■ Piping screw-in torque
[Combination, module type]
Make sure that excessive torque is not applied on the body and piping when piping.

Series	SFC3**	SFC4**	SFC8**
Max. torque N·m	30	30	70

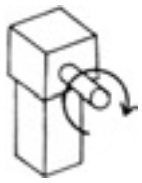

[Inline]

Port thread	Tightening torque N·m
Rc1/4	6 to 8
Rc3/8	13 to 15

■ Drain piping
● The drain piping for the plastic bowl has a barbed nipple, and can be directly installed. However, confirm that the drain cock is closed before inserting the tube.
Do not route it vertically. Pipe so that no lateral load is applied on the bowl.
Do not fix the tube connected to the drain outlet with a lateral load applied. If drainage is performed with a lateral load applied, external leakage may occur.

■ Tightening torque of drain cock
● The maximum tightening torque of the drain cock of the plastic bowl is 0.5 N·m.

■ Perform piping so no excessive force is applied to the product.
When piping or installing, do not apply tension, compression, bending or external force from tubes, etc.

■ When supplying working fluid after connecting pipes, do not suddenly apply high pressure.
Connected piping could be dislocated and tubing could fly off.

■ Select the appropriate piping tube.

■ Securely insert a tube into the push-in fitting before use.

■ Use the width across flats of the connection part when piping.
[Inline]
For Rc thread piping, apply the wrench to the width across flats of the connection part. Do not apply it to any other part when tightening.

■ Attach the maintenance label to this product to make maintenance periods clear.

■ Storage
Do not store this product in a hot, humid atmosphere or atmospheric conditions outside of the specified range for a prolonged period of time. Resin or rubber parts could deteriorate, and the resin element housing could become discolored.
Contact CKD when storing products exceeding specifications.

Use/maintenance

⚠WARNING

■Perform periodic inspection at least once every six months to check for any cracks, scratches, or other damage to the plastic bowl and transparent housing.
If cracks, scratches or other deterioration are found, they may cause damage. Please replace the bowl or the product with a new one.

■Check the plastic bowl periodically for contamination.
- ●If parts are heavily contaminated or if transparency has decreased, replace with a new bowl.
- ●Use water and household detergent to wash parts. Rinse them out well with clean water afterward.

■Removing the bowl
Stop the working fluid supply. Release the pressure in the bowls completely and make sure that there is no residual pressure before removing the bowls.

■Remove air filter drain.
Components could malfunction if moisture flows into the secondary side.

■Do not disinfect or clean using alcohol. It may deteriorate or damage the plastic part.

⚠CAUTION

■Anti-bacterial and bacteria removing effects lessen when there are dirt or oil deposits in the filter element.
Periodically implement inspections and replacements.
Contact CKD for maintenance details.

■Do not modify the product.

■Read the instructions and precautions included with the product before use or maintenance.Wash your hands before attaching new elements.

Drainage method

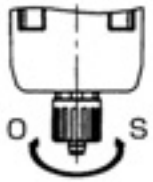

Plastic bowl

- ●Drainage starts when the cock is turned in the O direction, and stops when the cock is turned in the S direction.
Tighten by hand in the S direction.

Removing the resin bowl

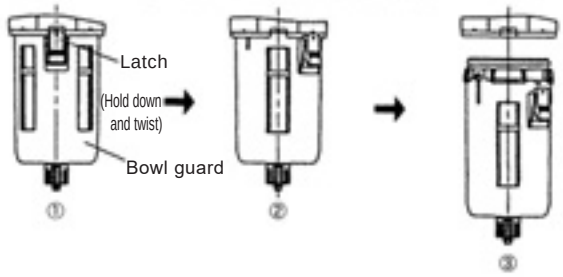

■This filter cannot be flushed with air, water, etc., and reused.When 1 year (6,000 hours) has passed or the pressure drops to 0.1 MPa, replace the element with a new one.
- ●We ask that customers perform element replacement maintenance by themselves.
- ●During element replacement, take consideration that bacteria, waste, or foreign matter deposits in the primary side do not flow into the secondary side.

■During use, do not apply vibration, impact, tube shaking, or other external force.

Chemical resistance of plastic

⚠ WARNING

- The chemical resistance of plastic parts is shown below.
- Avoid using products where the working fluid or atmosphere contains chemicals, or where they could adhere to parts.
- Use in the above state could lead to bowl damage and accidents.

Chemical resistance of plastic bowl and transparent housing

Consult CKD when using in environments filled with the following chemicals.
Check whether the testing solutions, sealants and adhesives contain the following chemicals.

Types of chemicals	Categories of chemicals	Main products of chemicals	General applications	Nylon
Inorganic chemicals	Acids	Sodium hypochlorite, hydrochloric acid, sulfuric acid, hydrofluoric acid, phosphoric acid, chromic acid, etc.	Sterilization, acid washing of metals, acidic degreasing solutions, coating treatment solutions, etc.	x
	Alkalines	Caustic soda, caustic potash, calcium hydroxide, aqueous ammonia, alkalis such as sodium carbonate	Alkaline degreasing solution for metals Soluble coolant, leakage detection agent	○
	Inorganic salts	Sodium sulfide, sodium nitrate, potassium bichromate, sulfate of soda, etc.		○
Organic chemicals	Aromatic Hydrocarbons	Benzene, toluene, xylene, ethyl benzene, styrene, etc.	Contained in paint thinner (benzene, toluene, and xylene)	x
	Chlorinated aliphatic hydrocarbons	Methyl chloride, ethylene chloride, methylene chloride, acetylene chloride, chloroform, trichlene, perchlene, carbon tetrachloride	Organic solvent-based washing solution for metals (trichlene, perchlene, carbon tetrachloride, etc.)	○
	Chlorinated aromatic hydrocarbons	Chlorobenzene, dichlorobenzene, benzene hexachloride (B/H/C), etc.	Agricultural chemicals	○
	Petroleum components	Solvent naphtha, gasoline, kerosene		○
	Alcohols	Methyl alcohol, ethyl alcohol, cyclohexanol, benzyl alcohol	Used as antifreezing agent Leakage detection agent	x
	Phenol	Carbolic acid, cresol, naphthol, etc.	Disinfectant solution	x
	Ethers	Methyl ether, methyl ethyl ether, ethyl ether	Additive of brake oil	○
	Ketones	Acetone, methyl ethyl ketone, cyclohexanone, acetophenone, etc.		x
	Carboxylic acids	Formic acid, acetic acid, butyl acid, acrylic acid, oxalic acid, phthalic acid, etc.	Dyes/oxalic acid for aluminum processing, phthalic acid for paint base and leakage detection agents	x
	Esters	Dimethyl phthalate (DMP), diethyl phthalate (DEP), dibutyl phthalate (DBP), dioctyl phthalate (DOP)	Lubricant, synthetic oil, rust preventing agent additive plasticizer for synthetic resin	○
	Oxyacids	Glycol acid, lactic acid, malic acid, citric acid, tartaric acid		x
	Nitro compounds	Nitromethane, nitroethane, nitroethylene, nitrobenzene, etc.		○
	Amines	Methylamine, dimethylamine, ethylamine, aniline, acetanilide, etc.	Additive of brake oil	x
	Nitriles	Acetonitrile, acrylonitrile, benzonitrile, acetoisonitrile, etc.	Raw material for nitrile rubber	○

MEMO

Modular design
F.R.L.

Flame-resistant Series

■ **Refining and pressure adjusting components/F.R.L. units**



CONTENTS

Product introduction 24
Series variation 4 to 19

Filter/regulator

● Filter/regulator (W*000-G4) 252
● Reverse filter/regulator (W*100-G4) 258

Air filter

● Air filter (F*000-G4) 266

Regulator

● Regulator (R*000-G4) 274
● Reverse regulator (R*100-G4) 280

Bracket/joiner (B/J) 346
Distributor (D*01-00) 348
Pipe adaptor (A***) 350
⚠ Safety precautions 354

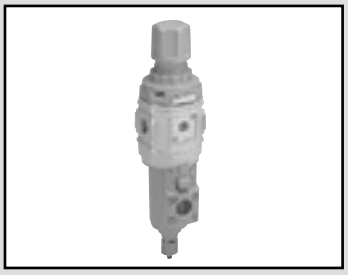

Filter and regulator Flame-resistant series

W3000/W4000/W8000-G4 Series

New Series of 5 µm element for dust removal, and 0.3 µm element for tar removal.

● Port size: 1/4 to 1

JIS symbol 

RoHS CAD

Specifications

Item		W3000-G4	W4000-G4	W8000-G4
Working fluid		Compressed air		
Max. working pressure	MPa	1.0 (≈150 psi, 10 bar) (*1, *2)		
Proof pressure	MPa	1.5 (≈220 psi, 15 bar)		
Ambient / fluid temperatures	°C	5 (41°F) to 60 (140°F)		
Filtration rating	µm	5 or 0.3		
Set pressure	MPa	0.05 (≈7.3 psi, 0.5 bar) to 0.85 (≈120 psi, 8.5 bar)		
Pressure relief		With relief mechanism		
Drain capacity	cm^3	45	80	80 (*3)
Port size	Rc,NPT,G	1/4, 3/8 (1/2 uses an adaptor)	1/4, 3/8, 1/2 (3/4 uses an adaptor)	3/4, 1 (1 1/4 uses an adaptor)
Weight	kg	0.72	1.08	2.16
Standard specifications		Exterior: Flame-resistant material, metal bowl		

*1: In the case of "F" with auto-drain, the min. working pressure of auto-drain is 0.1 MPa.
Air is purged with initial drainage until pressure reaches 0.1 MPa.
*2: In the case of "F1" with auto-drain, the min. working pressure of auto-drain is 0.15 MPa.
*3: Up to 170 cm^3 is stored with the manual drain cock only.

Option weight

* Add to the weight of the standard accessories.

Unit: kg

Code	Drain discharge				Bowl material	Press.gauge	Pipe adaptor set					
	F	F1	FF	FF1	M	T*	A8*W	A10*W	A15*W	A20*W	A25*W	A32*W
W3000-G4	0.02	0.02			0	0	0.16	0.16	0.16			
W4000-G4	0.02	0.02			0	0	0.16	0.16	0.16	0.16		
W8000-G4	0.02	0.02	0.02	0.02	0	0				0.53	0.53	0.53

Code	Attachment			
	BW	B3W	G49P	G59P
W3000-G4	0.17	0.07	0.086	0.115
W4000-G4	0.21	0.11	0.086	0.115
W8000-G4	0.36		0.086	0.115

How to order

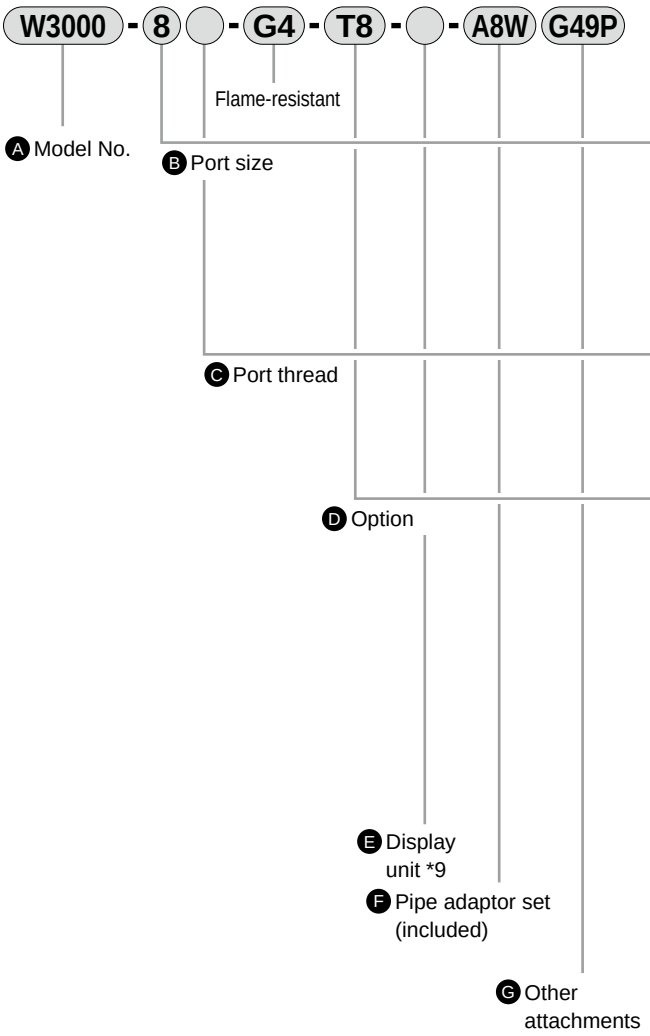

* Refer to page 30 for the explanation of the option.

Code	Description	A Model No. W3000	W4000	W8000
B Port size				
8	1/4	●	●	
10	3/8	●	●	
15	1/2		●	
20	3/4			●
25	1			●
C Port thread				*1
Blank	Rc thread	●	●	●
N	NPT thread	●	●	●
G	G thread	●	●	●
D Option				*2
Drain discharge *3 — **Blank**	Manual drain cock	●	●	●
Drain discharge *3 — **F**	Auto-drain, man OVRD (NO: no press→Exhaust)	●	●	●
Drain discharge *3 — **F1**	Auto-drain, man OVRD (NC: no press→no exhaust)	●	●	●
Drain discharge *3 — **FF**	Large auto-drain, man OVRD (NO: no press→Exhaust)			●
Drain discharge *3 — **FF1**	Large auto-drain, man OVRD (NC: no press→no exhaust)			●
Bowl material — **Blank**	Metal bowl (resin cock)	●	●	●
Bowl material — **M**	Metal bowl (metal cock)	●	●	●
Element — **Blank**	5 µm	●	●	●
Element — **Y**	0.3 µm (submicron) *4	●	●	●
Pressure range — **Blank**	0.05 to 0.85 MPa	●	●	●
Pressure range — **L**	0.05 to 0.35 MPa *5	●	●	●
Pressure relief — **Blank**	With relief mechanism	●	●	●
Pressure relief — **N**	Non-relief	●	●	●
Pressure gauge — **T**	No pressure gauge (gauge port (1/4) is assembled sealed)	●	●	●
Pressure gauge — **T8**	Pressure gauge ready (gauge port (1/4) is left open)	●	●	●
Flow direction — **Blank**	Standard flow (left → right)	●	●	●
Flow direction — **X1**	Reverse flow (right → left)	●	●	●
E Display unit				
Blank	MPa display (Rc thread), psi display (NPT thread), bar display (G thread)	●	●	●
J1	MPa display (NPT, G thread)	●	●	●
F Pipe adaptor set (included)				*6 Page 350
Blank	Not included	●	●	●
A8*W	1/4 pipe adaptor set (white)	●	●	
A10*W	3/8 pipe adaptor set (white)	●	●	
A15*W	1/2 pipe adaptor set (white)	●	●	
A20*W	3/4 pipe adaptor set (white)		●	●
A25*W	1 pipe adaptor set (white)			●
A32*W	1 1/4 pipe adaptor set (white)			●
*** Adaptor thread**				
Blank	Rc thread	●	●	●
N	NPT thread	●	●	●
G	G thread	●	●	●
G Other attachments				*8 Pages 346, 363
Blank	Not included	●	●	●
BW	C type bracket (silver)	●	●	●
B3W *7	L type bracket (silver)	●	●	
G49P	G49D-8-P10(L:G49D-8-P04)	●	●	●
G59P	G59D-8-P10(L:G59D-8-P10)	●	●	●

⚠ Precautions for model No. selection

*1: G threads and NPT threads are available for IN, OUT, gauge port and drain outlet (metal bowl (metal cock) with auto-drain).
*2: Select options for the drainage, bowl material, element, and regulator.
When selecting options for several items, list options in order from the top.
*3: Refer to page 354 for the auto-drain usage conditions.
*4: Refer to page 268 for max. processing flow rate when option "Y" is selected.
*5: The pressure gauge's indication range is 0 to 0.4 MPa for the option "L".
*6: The pipe adaptor set and C type bracket cannot be used together.
*7: For details on mounting the L type bracket, refer to (2. Regulator) of "⚠ Cautions and Installation & Adjustment" (page 357).
*8: The pressure gauge (included) can be selected only when C Port thread is Rc thread.
*9: Display unit options when selecting NPT threads: If Blank is selected, the pressure unit is psi and the temperature display unit is °F.
When G thread and Blank display unit option are selected, the pressure unit will be bar and the temperature display unit will be °C.
When NPT/G thread and "J1" display unit option are selected, the pressure unit will be MPa and the temperature display unit will be °C.

Flow characteristics

● W3000-8-G4

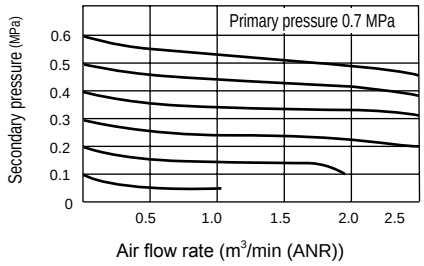

● W3000-10-G4

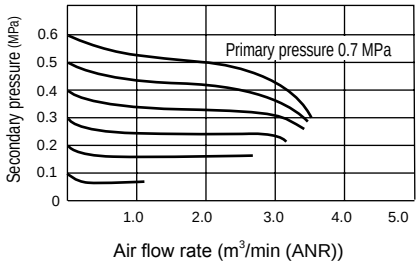

● W4000-8-G4

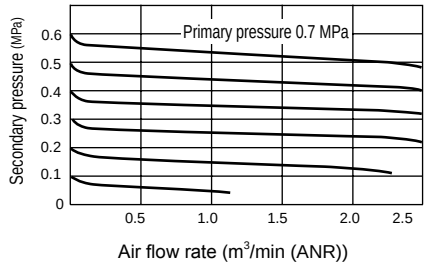

● W4000-10-G4

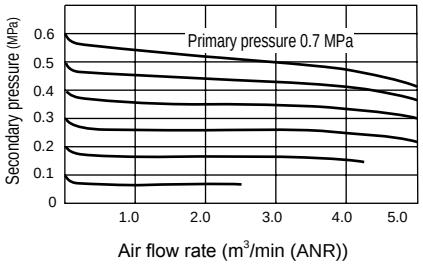

● W4000-15-G4

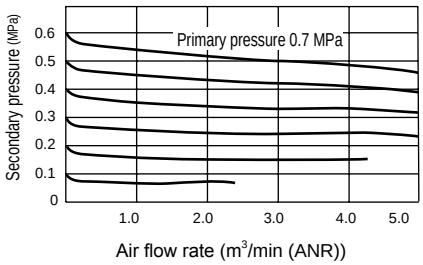

● W8000-20-G4

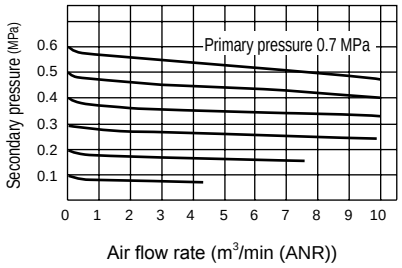

● W8000-25-G4

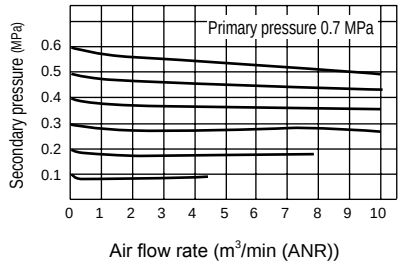

Pressure characteristics

● W3000-G4

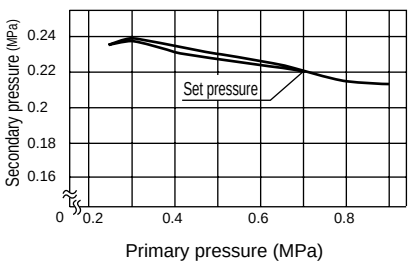

● W4000-G4

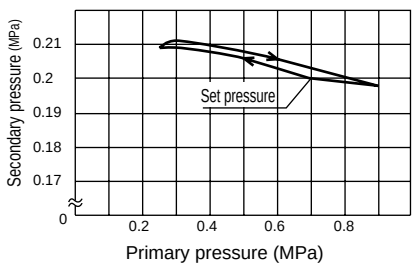

● W8000-G4

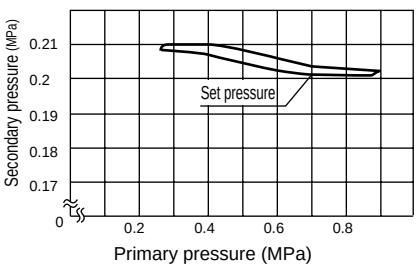

Internal structure and parts list

● W3000-G4

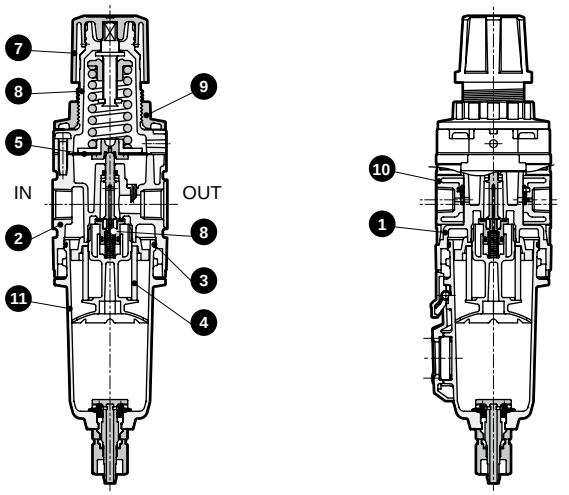

● W4000-G4

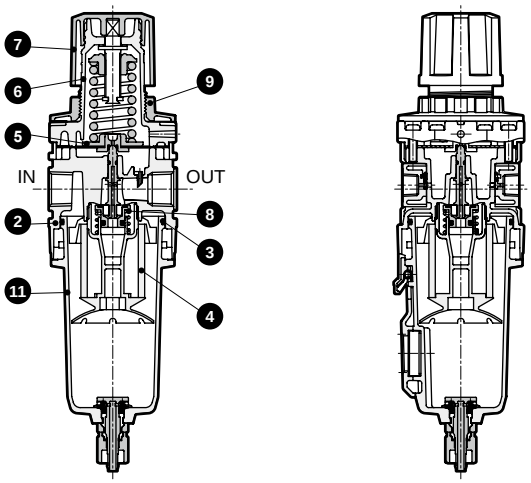

● W8000-G4

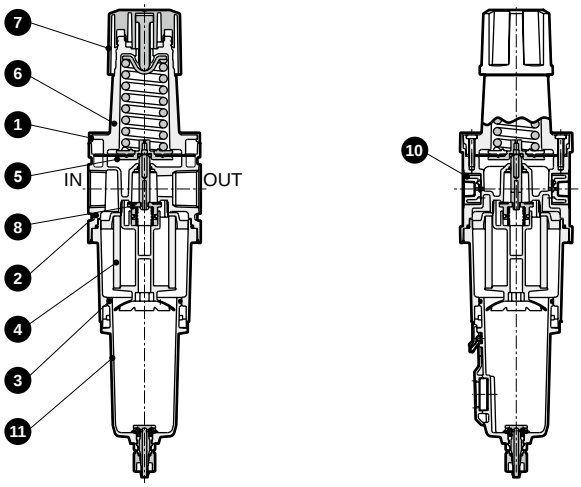

No.	Part name	Material		
		W3000-G4	W4000-G4	W8000-G4
1	Plate cover	ABS resin (*1)		
2	Body	Aluminum alloy die-casting		
3	O-ring	Special nitrile rubber		
4	Element	Polypropylene		
5	Diaphragm assembly	Zinc alloy die-casting/nitrile rubber		
6	Cover	Aluminum alloy die-casting		
7	Knob	PBT resin (*1)		
8	Valve assembly	Copper alloy, hydrogenated nitrile rubber (polyacetal resin: W3000, 4000)		
9	Mounting nut	PBT resin (*1)		-
10	Gauge plug assembly	Polyamide resin (*1), nitrile rubber, steel		
11	Bowl assembly	Aluminum alloy die-casting, PBT resin (*1), glass, nitrile rubber, steel, polyacetal resin, urethane resin		

*1: Flame-resistant resin, UL94 Standards V-0 or equivalent

Dimensions CAD

● W3000-G4

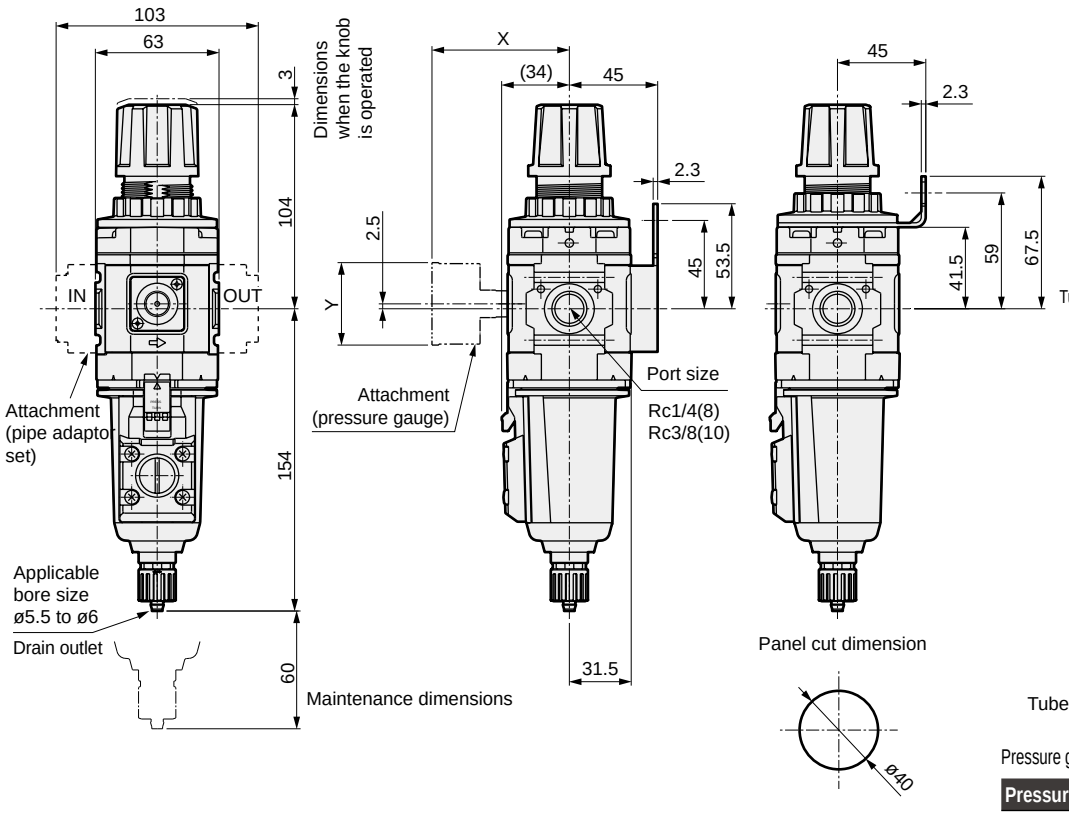

· Attachment
C type bracket (-BW)
Part model No.: B320
· Material: Steel
Zinc plated

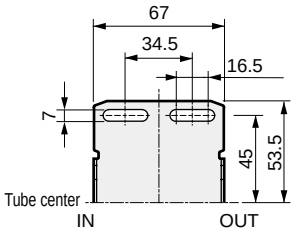

L type bracket (-B3W)
Part model No.: B330
· Material: Steel
Zinc plated

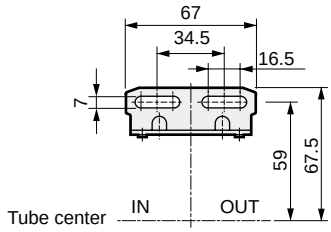

Pressure gauge attached optional dimensions table

Pressure gauge	X	Y
G49P	(69.5)	ø43.5
G59P	(72)	ø52

· For the metal bowl (resin cock), the dimensions of the manual drain cock and the auto-drain manual override are the same.
Note: The C type bracket and pipe adaptor set attachments cannot be used together.

● W4000-G4

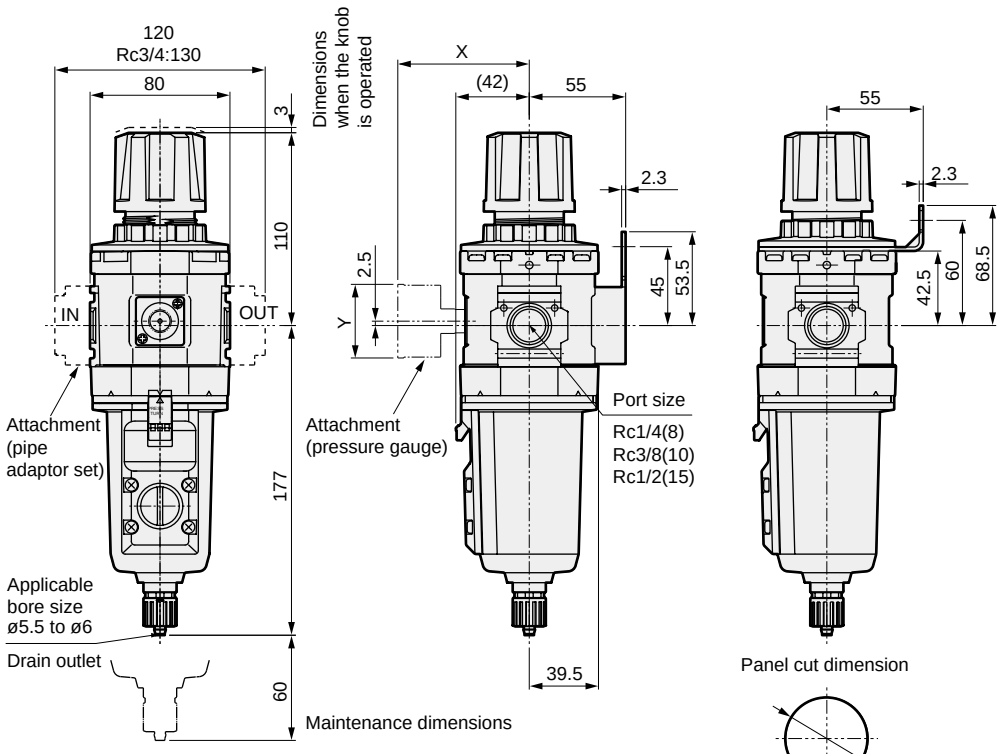

· Attachment
C type bracket (-BW)
Part model No.: B420
· Material: Steel
Zinc plated

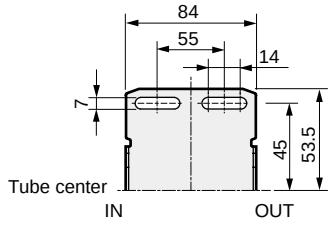

L type bracket (-B3W)
Part model No.: B430
· Material: Steel
Zinc plated

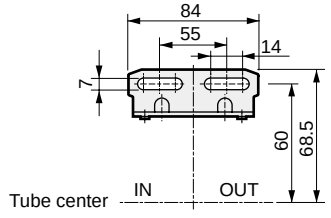

Pressure gauge attached optional dimensions table

Pressure gauge	X	Y
G49P	(74.5)	ø43.5
G59P	(77)	ø52

· For the metal bowl (resin cock), the dimensions of the manual drain cock and the auto-drain manual override are the same.
Note: The C type bracket and pipe adaptor set attachments cannot be used together.

Dimensions

● W8000-G4

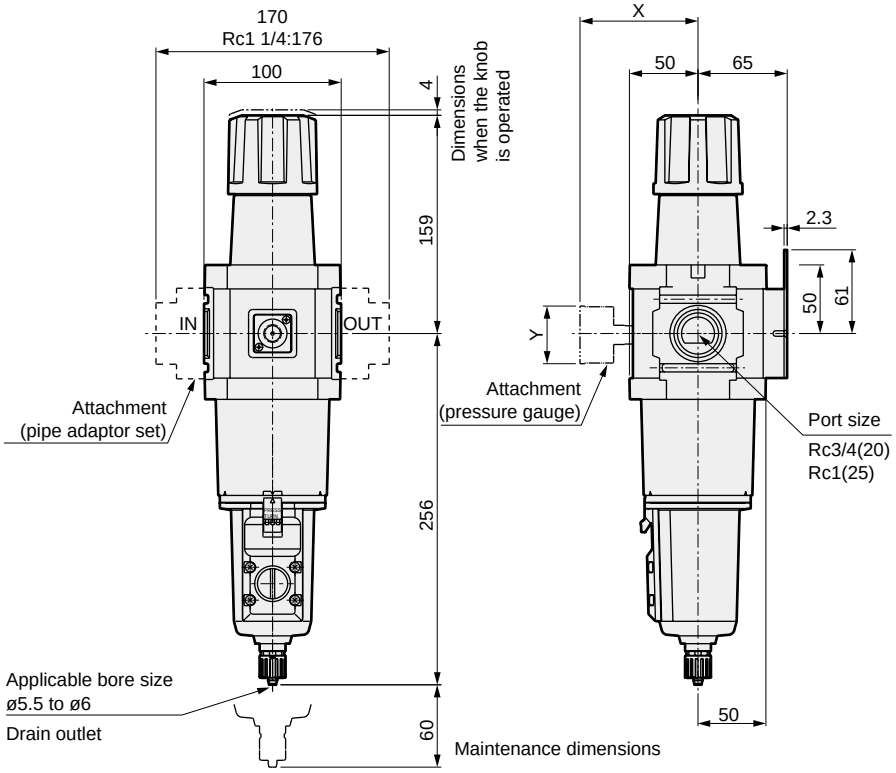

· Attachment
C type bracket (-BW)
Part model No.: B820
· Material: Steel
Zinc plated

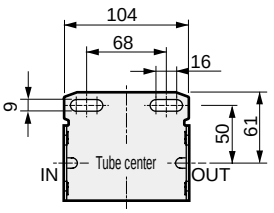

· For the metal bowl (resin cock), the dimensions of the manual drain cock and the auto-drain manual override are the same.

Note: The C type bracket and pipe adaptor set attachments cannot be used together.

Pressure gauge attached optional dimensions table

Pressure gauge	X	Y
G49P	(84.5)	ø43.5
G59P	(87)	ø52

Optional dimensions

● Metal bowl (metal cock) W3000/4000/8000-G4

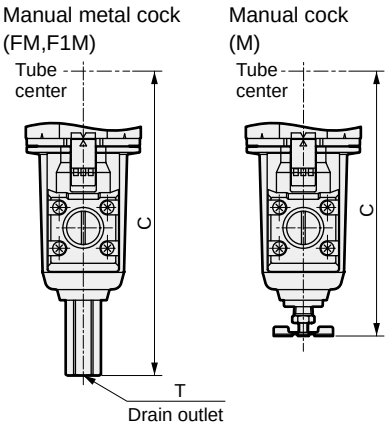

Dimensions table

Model No.	With auto-drain		Manual cock
	C	T	C
W3000-G4	164	Rc1/4	143.5
W4000-G4	187	Rc1/4	166.5
W8000-G4	266	Rc1/4	245.5



Reverse filter and regulator Flame-resistant series

W3100/W4100/W8100-G4 Series

Introducing the 5 μm dust removing element and 0.3 μm tar removing element with reverse flow function to the lineup.

● Port size: 1/4 to 1

JIS symbol

Specifications

Item		W3100-G4	W4100-G4	W8100-G4
Working fluid		Compressed air		
Max. working pressure	MPa	1.0 (≈150 psi, 10 bar) (*2, *3)		
Proof pressure	MPa	1.5 (≈220 psi, 15 bar)		
Ambient / fluid temperatures	°C	5 (41°F) to 60 (140°F)		
Filtration rating	μm	5 or 0.3		
Set pressure (*1)	MPa	0.05 (≈7.3 psi, 0.5 bar) to 0.85 (≈120 psi, 8.5 bar)		
Pressure relief		With relief mechanism		
Drain capacity	cm^3	45	80	80 (*4)
Port size	Rc,NPT,G	1/4, 3/8 (1/2 uses an adaptor)	1/4, 3/8, 1/2 (3/4 uses an adaptor)	3/4, 1 (1 1/4 uses an adaptor)
Weight	kg	0.72	1.08	2.16
Standard specifications		Exterior: Flame-resistant material, metal bowl		

*1: Refer to the set pressure range for the back pressure given on page 260 when selecting the model.
*2: In the case of "F" with auto-drain, the min. working pressure of auto-drain is 0.1 MPa.
Air is purged with initial drain until pressure reaches 0.1 MPa.
*3: In the case of "F1" with auto-drain, the min. working pressure of auto-drain is 0.15 MPa.
*4: Up to 170m^3 is stored with the manual drain cock only.
*5: Check that the primary pressure is at least 0.05 MPa more than the secondary pressure.

Option weight

* Add to the weight of the standard accessories.

Unit: kg

Code	Drain discharge				Bowl material	Press.gauge	Pipe adaptor set					
	F	F1	FF	FF1	M	T*	A8*W	A10*W	A15*W	A20*W	A25*W	A32*W
W3100-G4	0.02	0.02			0	0	0.16	0.16	0.16			
W4100-G4	0.02	0.02			0	0	0.16	0.16	0.16	0.16		
W8100-G4	0.02	0.02	0.02	0.02	0	0				0.53	0.53	0.53

Code	Attachment			
	BW	B3W	G49P	G59P
W3100-G4	0.17	0.07	0.086	0.115
W4100-G4	0.21	0.11	0.086	0.115
W8100-G4	0.36		0.086	0.115

How to order

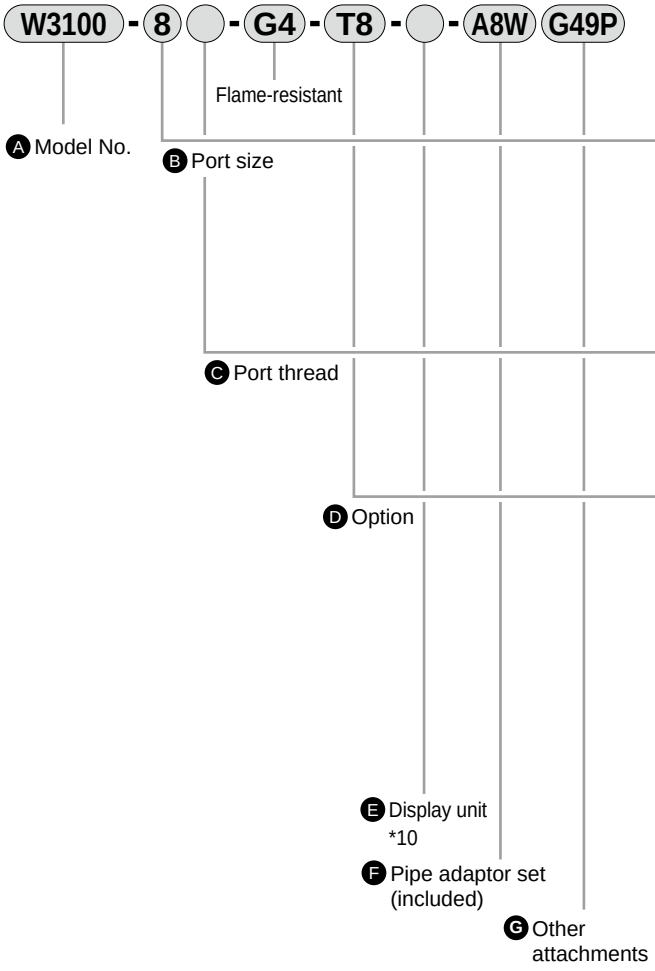

* Refer to page 30 for the explanation of the option.

Code		Description	A Model No. W3100	W4100	W8100
B Port size					
8		1/4	●	●	
10		3/8	●	●	
15		1/2		●	
20		3/4			●
25		1			●
C Port thread					*1
Blank		Rc thread	●	●	●
N		NPT thread	●	●	●
G		G thread	●	●	●
D Option					*2, *3
Drain discharge *4	**Blank**	Manual drain cock	●	●	●
	F	Auto-drain, man OVRD (NO: no press→Exhaust)	●	●	●
	F1	Auto-drain, man OVRD (NC: no press→no exhaust)	●	●	●
	FF	Large auto-drain, man OVRD (NO: no press→Exhaust)			●
	FF1	Large auto-drain, man OVRD (NC: no press→no exhaust)			●
Bowl material	**Blank**	Metal bowl (resin cock)	●	●	●
	M	Metal bowl (metal cock)	●	●	●
Element	**Blank**	5 µm	●	●	●
	Y	0.3 µm (submicron) *5	●	●	●
Pressure range	**Blank**	0.05 to 0.85 MPa	●	●	●
	L	0.05 to 0.35 MPa *6	●	●	●
Pressure relief	**Blank**	With relief mechanism	●	●	●
	N	Non-relief	●	●	●
Pressure gauge	**T**	No pressure gauge (gauge port (1/4) is assembled sealed)	●	●	●
	T8	Pressure gauge ready (gauge port (1/4) is left open)	●	●	●
Flow direction	**Blank**	Standard flow (left → right)	●	●	●
	X1	Reverse flow (right → left)	●	●	●
E Display unit					
Blank		MPa display (Rc thread), psi display (NPT thread), bar display (G thread)	●	●	●
J1		MPa display (NPT, G thread)	●	●	●
F Pipe adaptor set (included)					Page 350 *7
Blank		Not included	●	●	●
A8*W		1/4 pipe adaptor set (white)	●	●	
A10*W		3/8 pipe adaptor set (white)	●	●	
A15*W		1/2 pipe adaptor set (white)	●	●	
A20*W		3/4 pipe adaptor set (white)		●	●
A25*W		1 pipe adaptor set (white)			●
A32*W		1 1/4 pipe adaptor set (white)			●
*** Adaptor thread**					
Blank		Rc thread	●	●	●
N		NPT thread	●	●	●
G		G thread	●	●	●
G Other attachments					Pages 346, 363 *9
Blank		Not included	●	●	●
BW		C type bracket (silver)	●	●	●
B3W	*8	L type bracket (silver)	●	●	
G49P		G49D-8-P10(L:G49D-8-P04)	●	●	●
G59P		G59D-8-P10(L:G59D-8-P04)	●	●	●

⚠Precautions for model No. selection

*1: G threads and NPT threads are available for IN, OUT, gauge port and drain outlet (metal bowl (metal cock) with auto-drain).

*2: Select options for the drainage, bowl material, element, and regulator.
When selecting options for several items, list options in order from the top.

***3: Positions of check valve and pressure gauge cannot be changed.**
If the IN and OUT direction must be reversed, indicate "X1" at the end of the option field.

*4: Refer to page 354 for the auto-drain usage conditions.

*5: Refer to page 268 for max. processing flow rate when option "Y" is selected.

*6: The pressure gauge's indication range is 0 to 0.4 MPa for the option "L".

*7: The pipe adaptor set and C type bracket cannot be used together.

*8: For details on mounting the L type bracket, refer to 2. Regulator of "⚠ Cautions and Installation & Adjustment" (page 357).

*9: The pressure gauge (included) can be selected only when C Port thread is Rc thread.

*10: Display unit options when selecting NPT threads: If Blank is selected, the pressure unit is psi and the temperature display unit is °F.
When G thread and Blank display unit option are selected, the pressure unit will be bar and the temperature display unit will be °C.
When NPT/G thread and "J1" display unit option are selected, the pressure unit will be MPa and the temperature display unit will be °C.

Flow characteristics

● W3100-8-G4

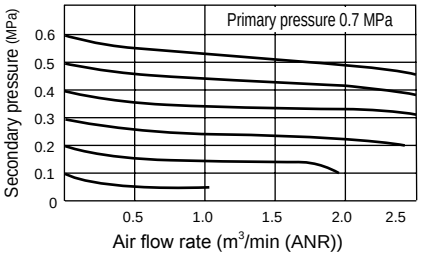

● W3100-10-G4

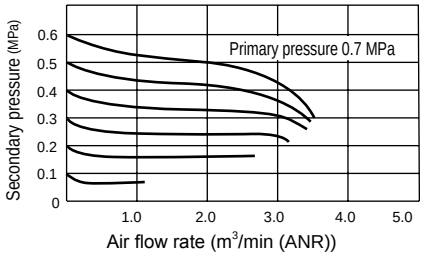

● W4100-8-G4

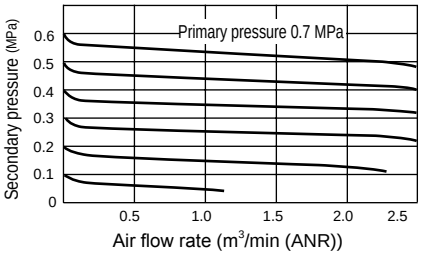

● W4100-10-G4

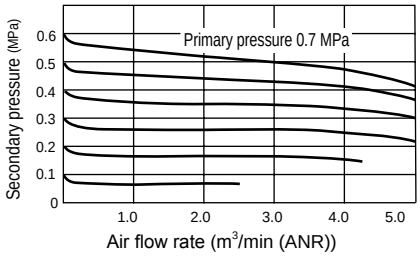

● W4100-15-G4

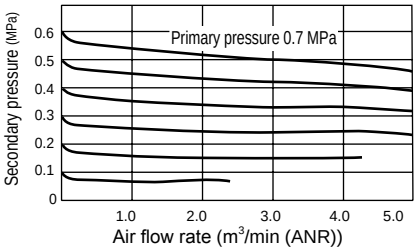

● W8100-20-G4

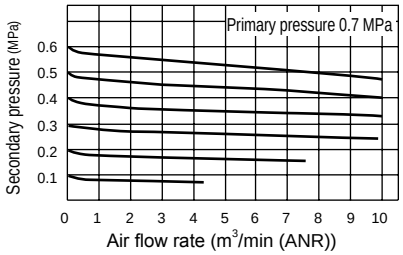

● W8100-25-G4

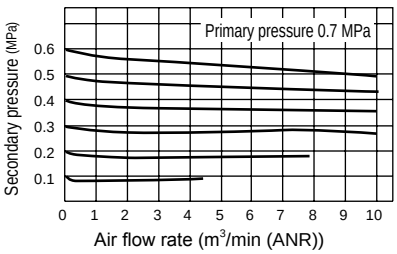

● Set pressure range to back pressure

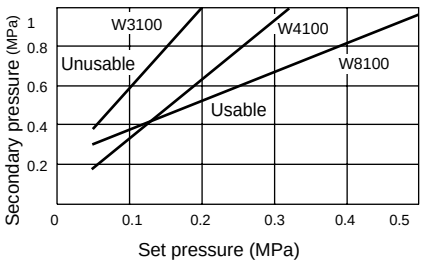

Note: The area above the graph line shows the unusable range and that below the graph line shows the usable range.
Example: If W4100 is set to set pressure 0.2 MPa and the secondary back pressure is 0.6 MPa or more, the secondary pressure will not be released to the primary side.

Pressure characteristics

● W3100-G4

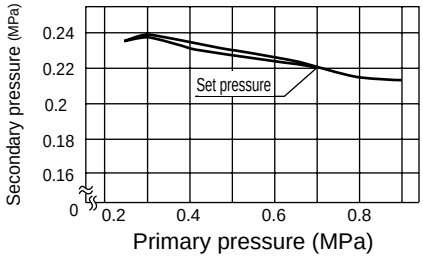

● W4100-G4

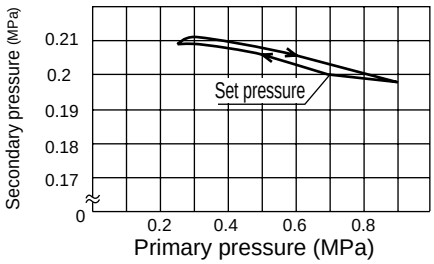

● W8100-G4

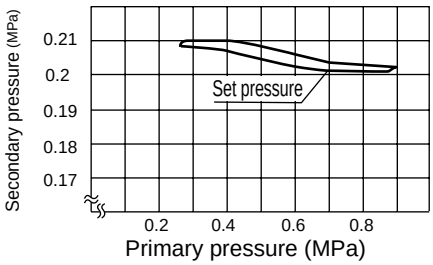

Internal structure and parts list

● W3100-G4

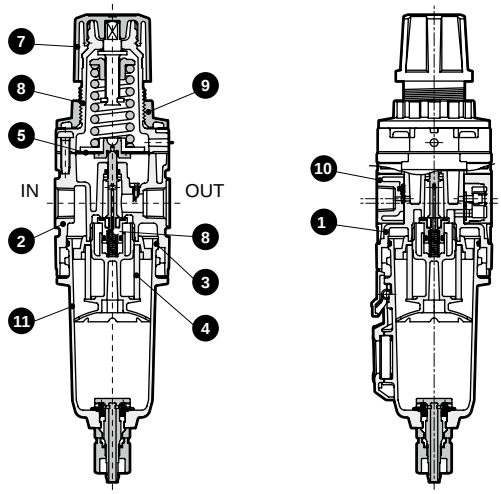

● W4100-G4

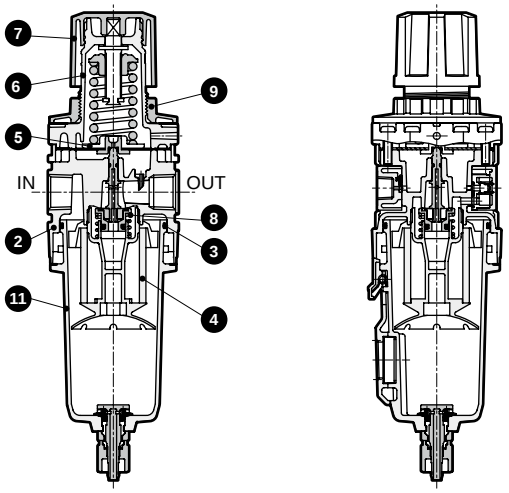

● W8100-G4

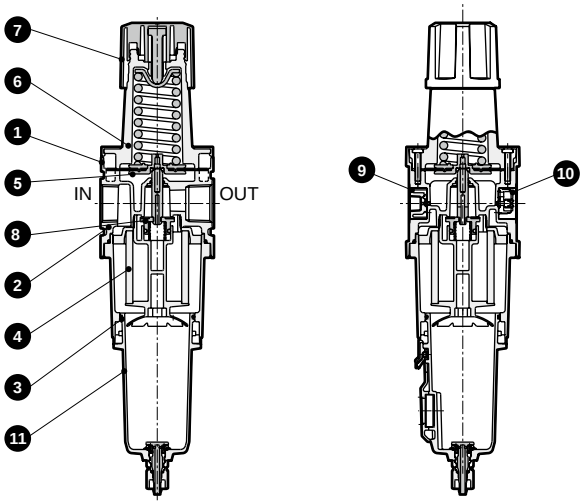

No.	Part name	Material		
		W3100-G4	W4100-G4	W8100-G4
1	Plate cover	ABS resin (*1)		
2	Body	Aluminum alloy die-casting		
3	O-ring	Special nitrile rubber		
4	Element	Polypropylene		
5	Diaphragm assembly	Zinc alloy die-casting, nitrile rubber		
6	Cover	Aluminum alloy die-casting		
7	Knob	PBT resin (*1)		
8	Valve assembly	Copper alloy, hydrogenated nitrile rubber (polyacetal resin: W3100, 4100)		
9	Gauge plug assembly	Polyamide resin (*1), nitrile rubber, steel		
10	Check valve total assembly	PBT resin, nitrile rubber, stainless steel wire, steel, aluminum		
11	Bowl assembly	Al alloy die-cast, PBT resin (*1), glass, nitrile rubber, steel, POM resin, URE resin		
12	Mounting nut	PBT resin (*1)		-

*1 : Flame-resistant resin, UL94 Standards V-0 or equivalent
*2 : Refer to page 264 for repair parts kit model No.

Functions

When the primary pressure is introduced from the IN side, the check valve functions as a regular regulator because it closes with primary pressure and spring load. When primary pressure is released by a switching valve such as a residual pressure exhaust valve, the check valve opens with secondary pressure. Pressure in the diaphragm chamber is released and pressure drops. This causes the diaphragm to be pressed down by the pressure adjustment spring. The main valve (valve assembly) opens, and the air on the OUT side is discharged.

Note: When the primary side pressure is released, back pressure A must be equal to or less than the set pressure range of the regulator corresponding to the back pressure shown in the graph. (Refer to page 260 for the graph)

● Circuit diagram

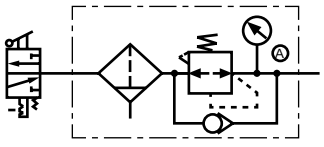

When using residual pressure exhaust valve in front of reverse filter and regulator.

Dimensions

● W3100-G4

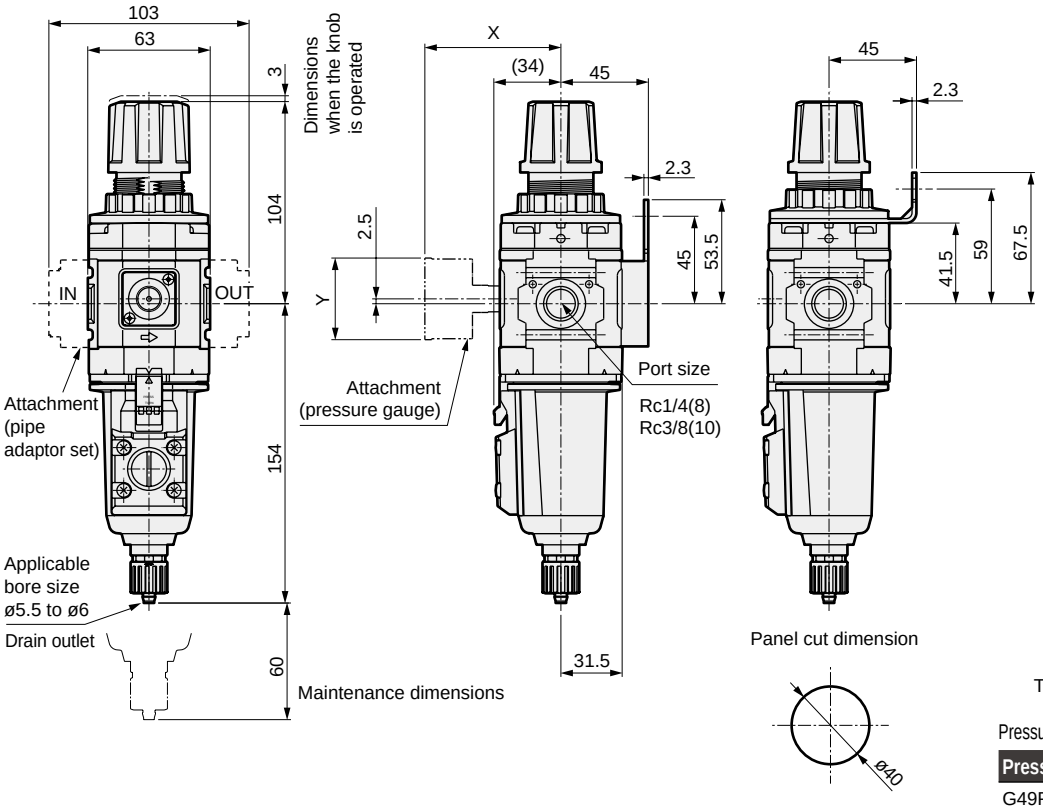

· Attachment
C type bracket (-BW)
Part model No.: B320
· Material: Steel
Zinc plated

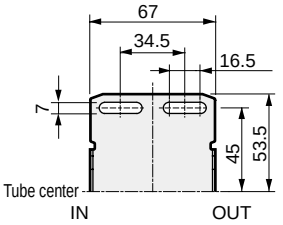

L type bracket (-B3W)
Part model No.: B330
· Material: Steel
Zinc plated

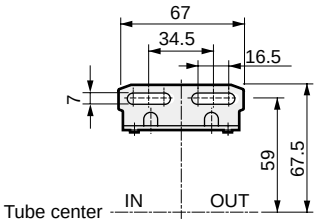

Pressure gauge attached optional dimensions table

Pressure gauge	X	Y
G49P	(69.5)	ø43.5
G59P	(72)	ø52

· For the metal bowl (resin cock), the dimensions of the manual drain cock and the auto-drain manual override are the same.
Note: The C type bracket and pipe adaptor set attachments cannot be used together.

● W4100-G4

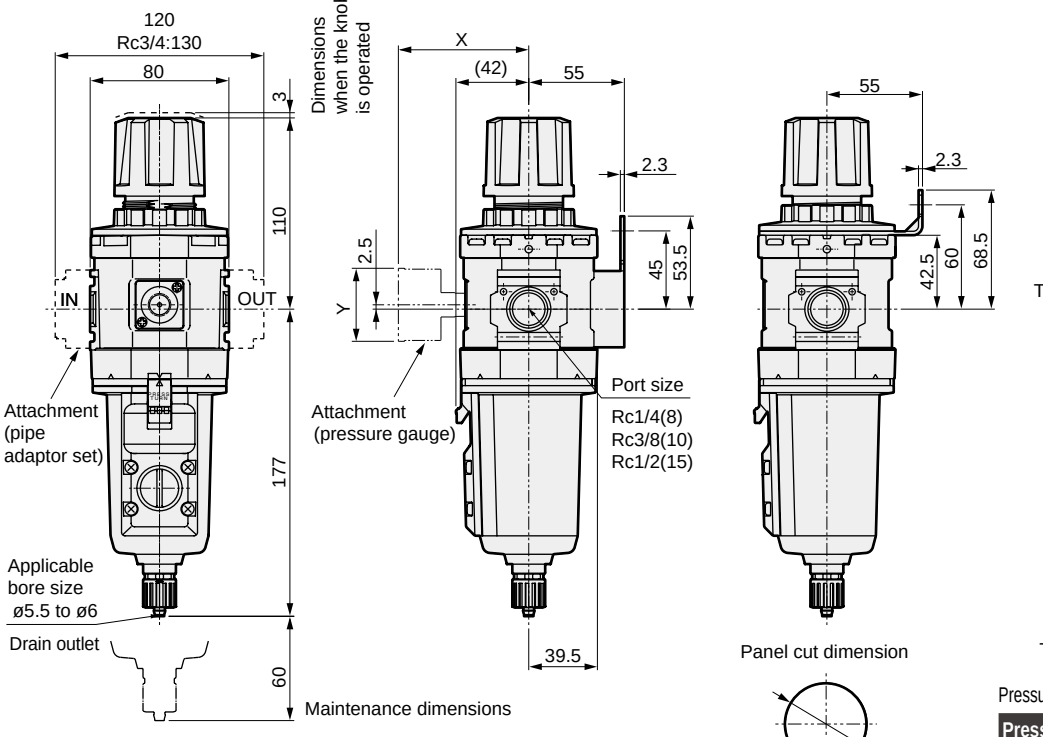

· Attachment
C type bracket (-BW)
Part model No.: B420
· Material: Steel
Zinc plated

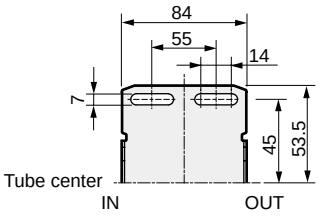

L type bracket (-B3W)
Part model No.: B430
· Material: Steel
Zinc plated

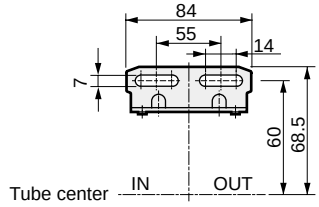

Pressure gauge attached optional dimensions table

Pressure gauge	X	Y
G49P	(74.5)	ø43.5
G59P	(77)	ø52

· For the metal bowl (resin cock), the dimensions of the manual drain cock and the auto-drain manual override are the same.
Note: The C type bracket and pipe adaptor set attachments cannot be used together.

Dimensions

● W8100-G4

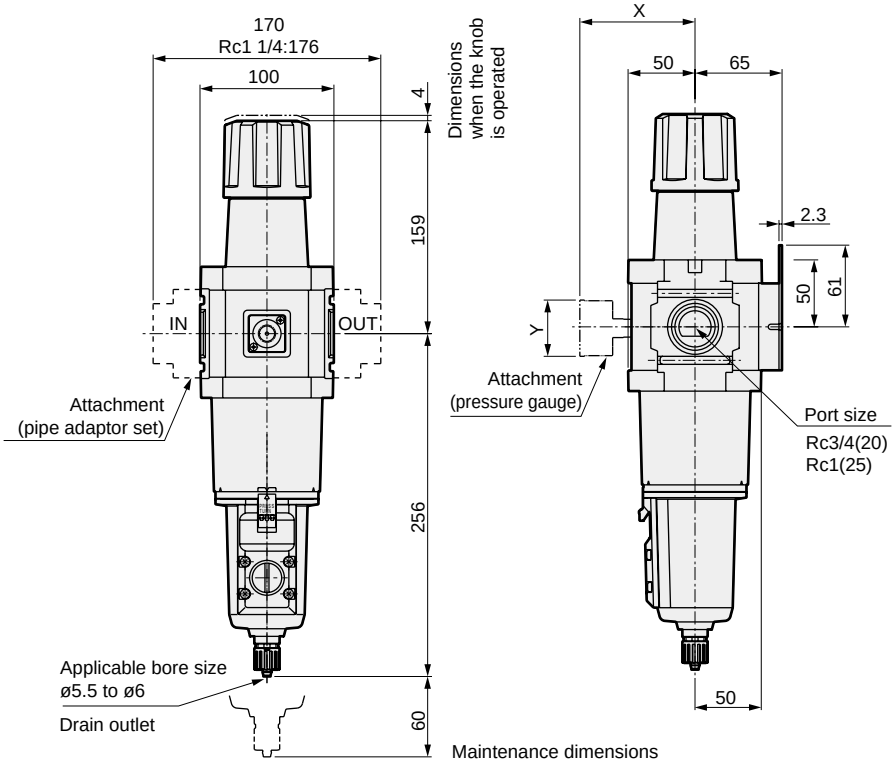

Maintenance dimensions

· Attachment
C type bracket (-BW)
Part model No.: B820
· Material: Steel
Zinc plated

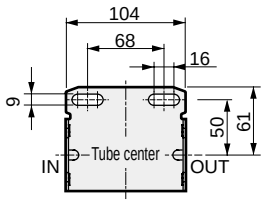

· For the metal bowl (resin cock), the dimensions of the manual drain cock and the auto-drain manual override are the same.

Note: The C type bracket and pipe adaptor set attachments cannot be used together.

Pressure gauge attached optional dimensions table

Pressure gauge	X	Y
G49P	(84.5)	ø43.5
G59P	(87)	ø52

Optional dimensions

● Metal bowl (metal cock) W3100-G4/W4100-G4/W8100-G4

Manual metal cock (FM, F1M)

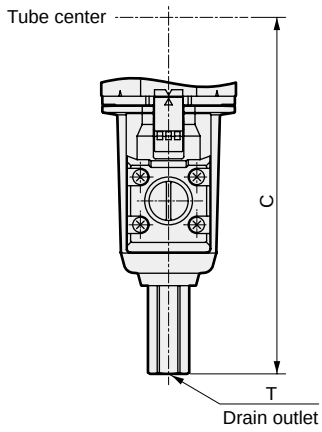

Manual cock (M)

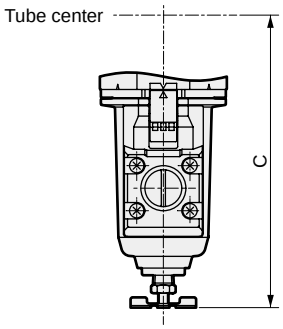

Dimensions table

Model No.	With auto-drain		Manual cock
	C	T	C
W3100-G4	164	Rc1/4	143.5
W4100-G4	187	Rc1/4	166.5
W8100-G4	266	Rc1/4	245.5

Optional parts diagram

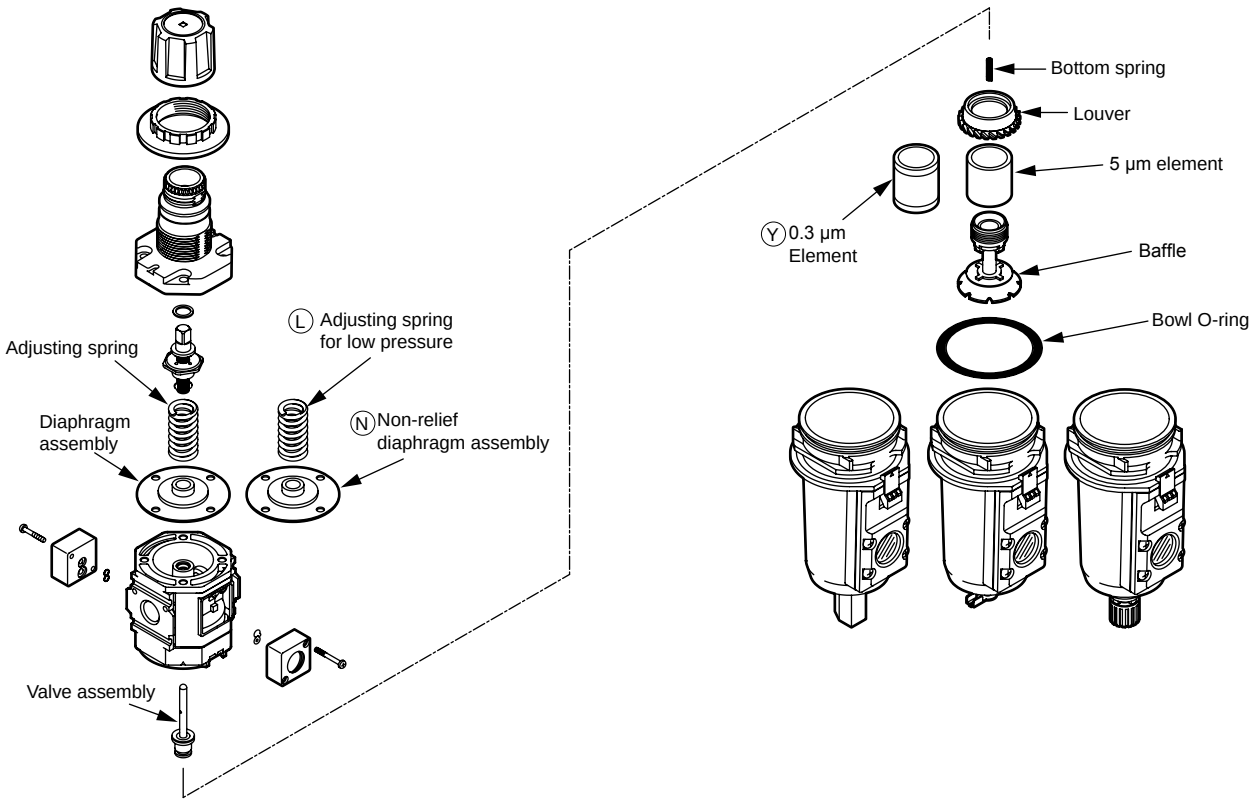

Repair parts kit (set of diaphragm assembly, valve assembly, bottom spring, louver, element, baffle, bowl O-ring)

Repair parts kits model No. / Model	Relief diaphragm 5 µm element (blank)	Non-relief diaphragm 5 µm element (N)	Relief diaphragm 0.3 µm element (Y)	Non-relief diaphragm 0.3 µm element (NY)
W3000-G4,W3100-G4	W3000-KIT	W3000-KIT-N	W3000-KIT-Y	W3000-KIT-NY
W4000-G4,W4100-G4	W4000-KIT	W4000-KIT-N	W4000-KIT-Y	W4000-KIT-NY
W8000-G4,W8100-G4	W8000-KIT	W8000-KIT-N	W8000-KIT-Y	W8000-KIT-NY

Valve assembly (set of valve assembly and bottom spring)

Model	Valve assembly model No.
W3000-G4,W3100-G4	W3000-VALVE-ASSY
W4000-G4,W4100-G4	W4000-VALVE-ASSY
W8000-G4,W8100-G4	W8000-VALVE-ASSY

* Refer to the regulator options and parts table (page 286) for details on the adjusting spring, diaphragm, check valve assembly for reverse regulator, and gauge plug assembly. Refer to the air filter options and parts table (page 272) for details on the element and bowl assembly.

MEMO

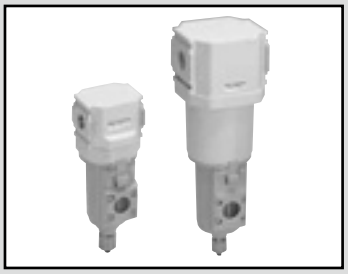

Air filter Flame-resistant series

F3000/F4000/F8000-G4 Series

New Series of 5 µm element for dust removal, and 0.3 µm element for tar removal.

● Port size: 1/4 to 1

JIS symbol 

RoHS CAD

Specifications

Item		F3000-G4	F4000-G4	F8000-G4
Working fluid		Compressed air		
Max. working pressure	MPa	1.0 (≈150 psi, 10 bar) (*1, *2)		
Proof pressure	MPa	1.5 (≈220 psi, 15 bar)		
Ambient / fluid temperatures	°C	5 (41°F) to 60 (140°F)		
Filtration rating	µm	5 or 0.3		
Drain capacity	cm^3	45	80	80 (*3)
Port size	Rc,NPT,G	1/4,3/8 (1/2 uses an adaptor)	1/4,3/8,1/2 (3/4 uses an adaptor)	3/4,1 (1 1/4 uses an adaptor)
Weight	kg	0.35	0.55	1.26
Standard specifications		Exterior: Flame-resistant material, metal bowl		

*1: In the case of “F” with auto-drain, the min. working pressure of auto-drain is 0.1 MPa.
Air is purged with initial drainage until pressure reaches 0.1 MPa.
*2: In the case of “F1” with auto-drain, the min. working pressure of auto-drain is 0.15 MPa.
*3: Up to 170 cm^3 is stored with the manual drain type only.

Option weight

* Add to the weight of the standard accessories.

Unit: kg

Code	Drain discharge				Bowl material	Pipe adaptor set						Bracket
	F	F1	FF	FF1	M	A8*W	A10*W	A15*W	A20*W	A25*W	A32*W	BW
F3000-G4	0.02	0.02			0	0.16	0.16	0.16				0.17
F4000-G4	0.02	0.02			0	0.16	0.16	0.16	0.16			0.21
F8000-G4	0.02	0.02	0.02	0.02	0				0.53	0.53	0.53	0.36

How to order

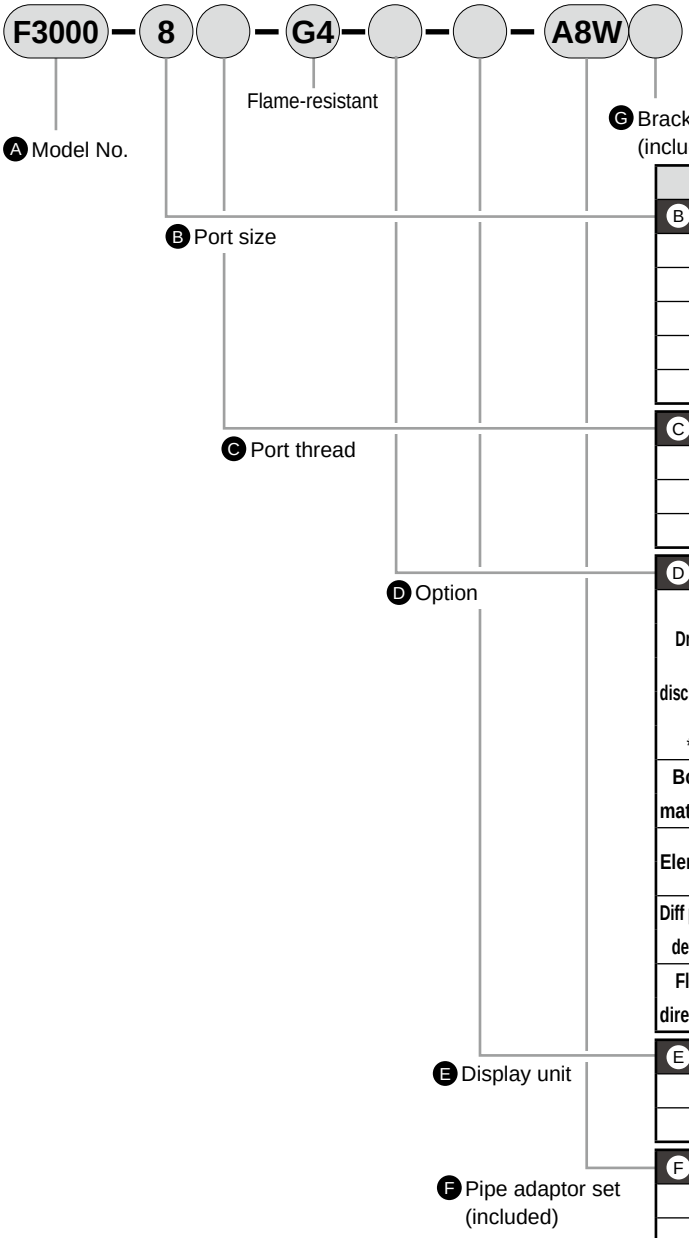

* Refer to page 30 for the explanation of the option.

Code	Description	A Model No. F3000	F4000	F8000
B Port size				
8	1/4	●	●	
10	3/8	●	●	
15	1/2		●	
20	3/4			●
25	1			●
C Port thread				*1
Blank	Rc thread	●	●	●
N	NPT thread	●	●	●
G	G thread	●	●	●
D Option				*2
Drain discharge *3 — **Blank**	With manual drain cock	●	●	●
Drain discharge *3 — **F**	Auto-drain, man OVRD (NO: no press→Exhaust)	●	●	●
Drain discharge *3 — **F1**	Auto-drain, man OVRD (NC: no press→no exhaust)	●	●	●
Drain discharge *3 — **FF**	Large auto-drain, man OVRD (NO: no press→Exhaust)			●
Drain discharge *3 — **FF1**	Large auto-drain, man OVRD (NC: no press→no exhaust)			●
Bowl material — **Blank**	Metal bowl (resin cock)	●	●	●
Bowl material — **M**	Metal bowl (metal cock)	●	●	●
Element — **Blank**	5 µm	●	●	●
Element — **Y**	0.3 µm (submicron)	●	●	●
Diff press detect — **Blank**	Without differential pressure detection port	●	●	●
Diff press detect — **Q**	With differential pressure detection port (Rc 1/4)			●
Flow direction — **Blank**	Standard flow (left → right)	●	●	●
Flow direction — **X1**	Reverse flow (right → left)	●	●	●
E Display unit				
Blank	MPa display (Rc thread), psi display (NPT thread), bar display (G thread)	●	●	●
J1	MPa display (NPT, G thread)	●	●	●
F Pipe adaptor set (included) *4				Page 350
Blank	Not included	●	●	●
A8*W	1/4 pipe adaptor set (white)	●	●	
A10*W	3/8 pipe adaptor set (white)	●	●	
A15*W	1/2 pipe adaptor set (white)	●	●	
A20*W	3/4 pipe adaptor set (white)		●	●
A25*W	1 pipe adaptor set (white)			●
A32*W	1 1/4 pipe adaptor set (white)			●
*** Adaptor thread**				
Blank	Rc thread	●	●	●
N	NPT thread	●	●	●
G	G thread	●	●	●
G Bracket (included)				Page 346
Blank	Not included	●	●	●
BW	C type bracket (silver)	●	●	●

⚠ Precautions for model No. selection

*1: G threads and NPT threads are available for IN, OUT, drain outlet (metal bowl (metal cock) with auto-drain) and differential pressure detection port.
*2: Select options for the drainage, bowl material, element and differential pressure detection.
When selecting options for several items, list options in order from the top.
*3: Refer to page 354 for the auto-drain usage conditions.
*4: The pipe adaptor set and C type bracket cannot be used together.

Flow characteristics

● F3000-8-G4

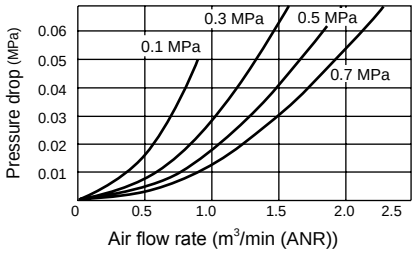

● F3000-10-G4

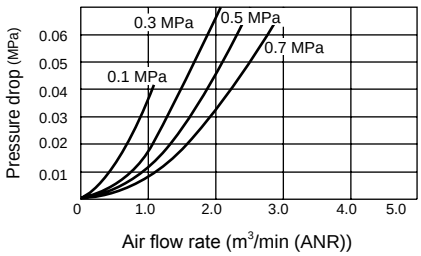

● F4000-8-G4

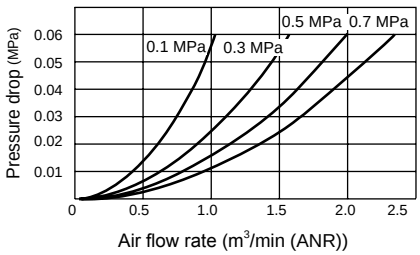

● F4000-10-G4

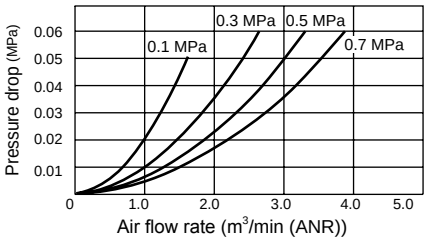

● F4000-15-G4

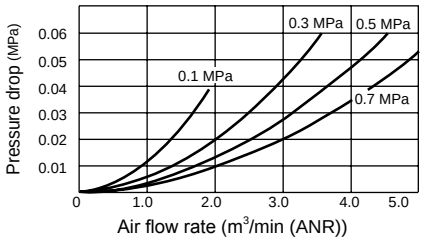

● F8000-20-G4

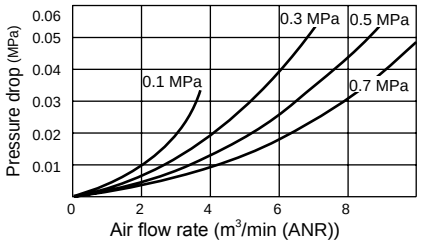

● F8000-25-G4

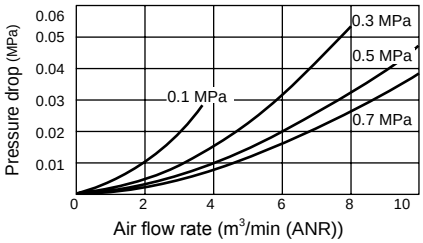

F3000

● F4000-*-G4-Y (0.3 μm element)

F8000

(Max. processing flow rate)

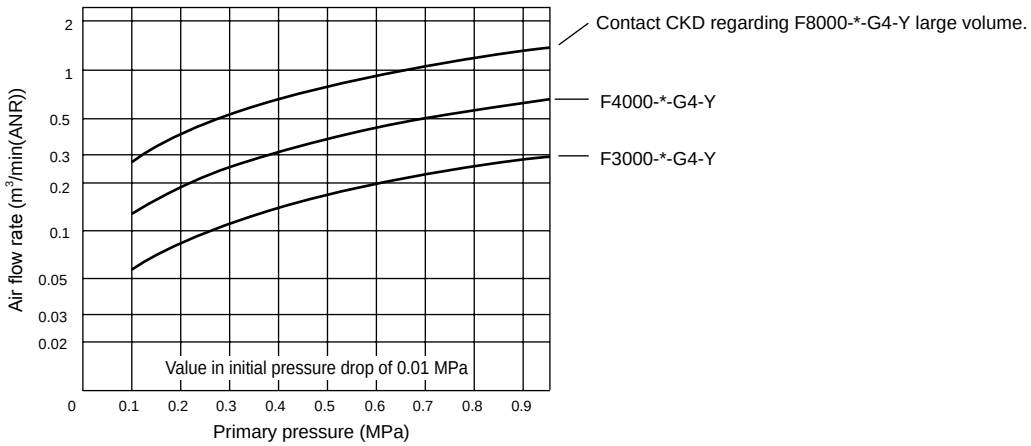

Internal structure and parts list

● F3000-G4

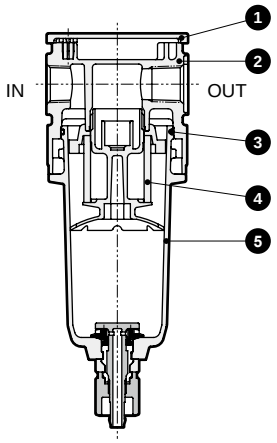

● F4000-G4

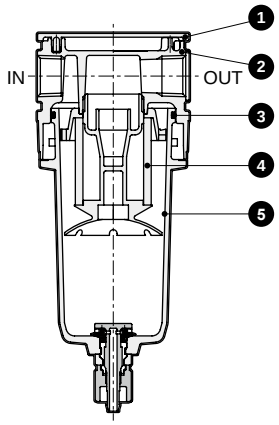

● F8000-G4

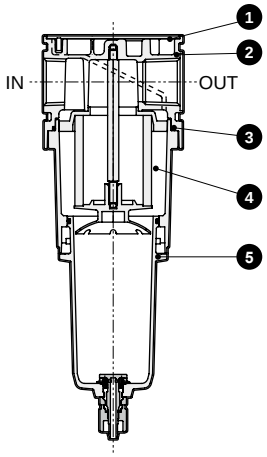

No.	Part name	Material		
		F3000-G4	F4000-G4	F8000-G4
1	Plate cover	ABS resin (*1)		
2	Body	Aluminum alloy die-casting		
3	O-ring	Special nitrile rubber		
4	Element (5 µm)	Polypropylene		
	Element (0.3 µm)	-		
5	Bowl assembly	Aluminum alloy die-casting, PBT resin (*1), glass, nitrile rubber, steel, polyacetal resin, urethane resin		

*1 : Flame-resistant resin, UL94 Standards V-0 or equivalent

*2 : Refer to page 272 for repair parts kits.

Dimensions CAD

● F3000-G4

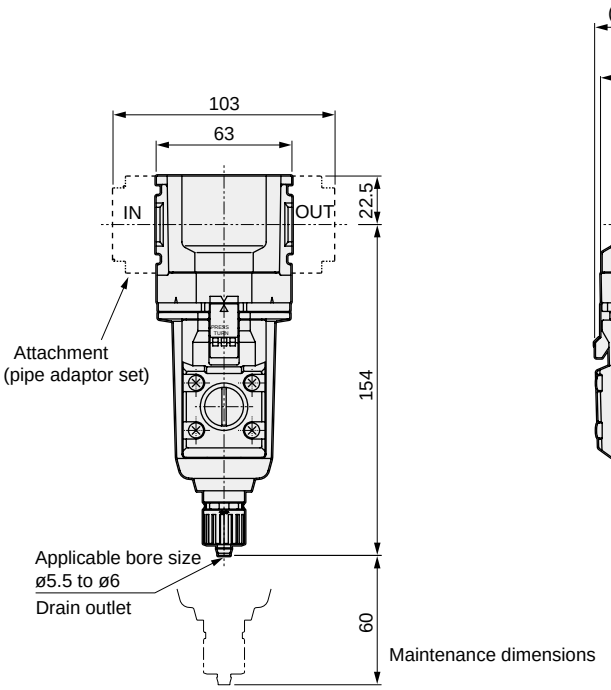

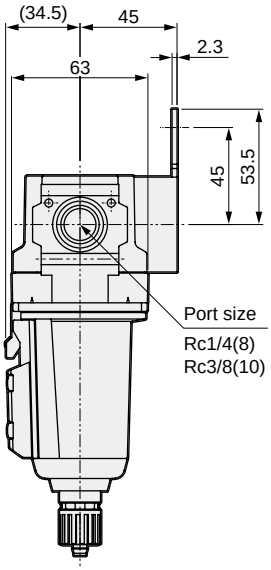

· Bracket
C type bracket (-BW)
Part model No.: B320
· Material: Steel
Zinc plated

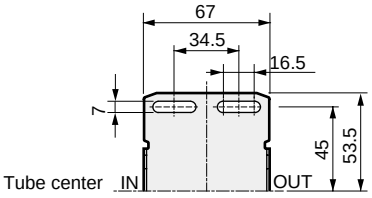

· For the metal bowl (resin cock), the dimensions of the manual drain cock and the auto-drain manual override are the same.
Note: The C type bracket and pipe adaptor set attachments cannot be used together.

● F4000-G4

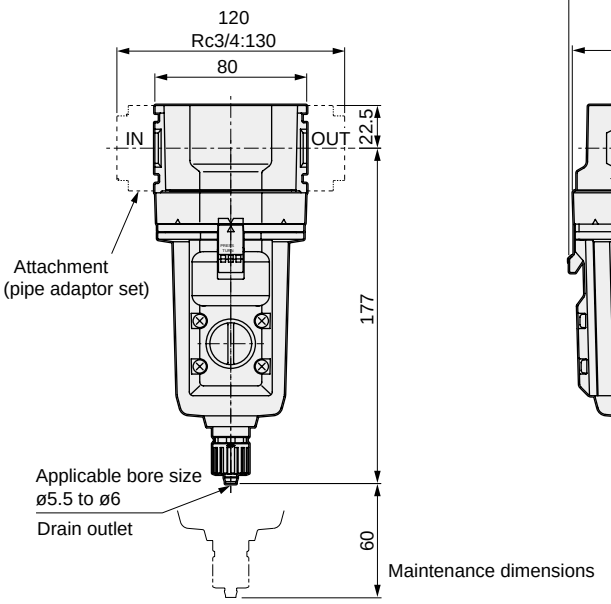

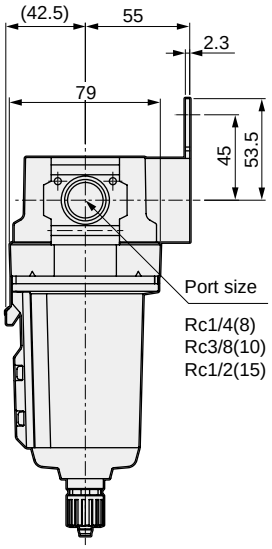

· Bracket
C type bracket (-BW)
Part model No.: B420
· Material: Steel
Zinc plated

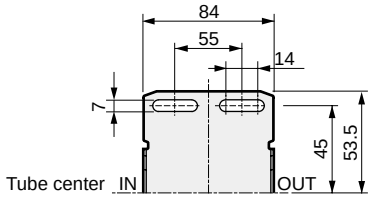

· For the metal bowl (resin cock), the dimensions of the manual drain cock and the auto-drain manual override are the same.
Note: The C type bracket and pipe adaptor set attachments cannot be used together.

Dimensions

● F8000-G4

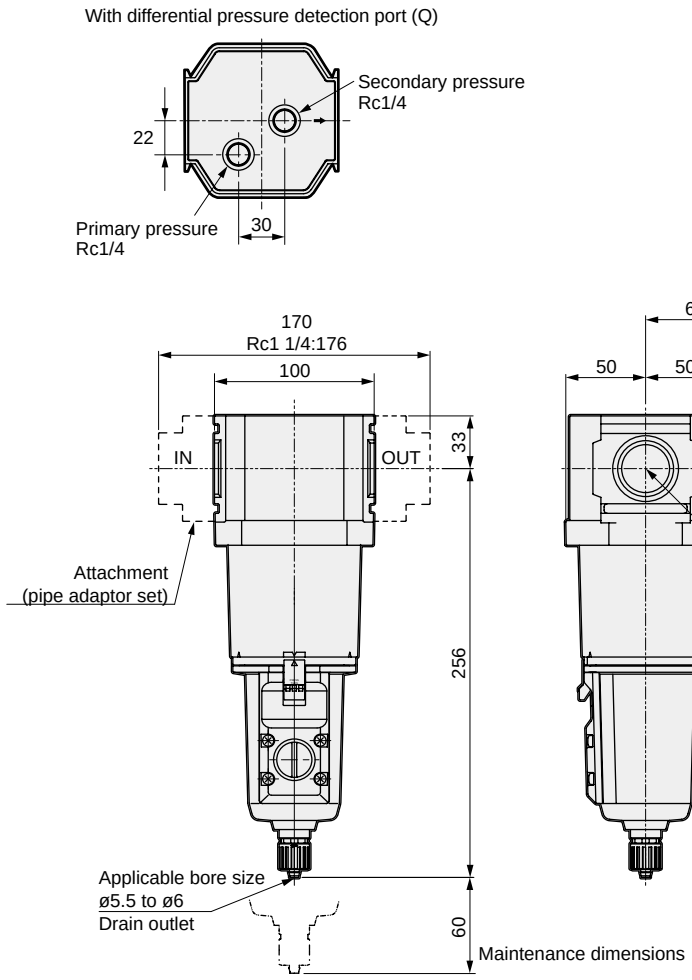

· Bracket
C type bracket (-BW)
Part model No.: B820
· Material: Steel
Zinc plated

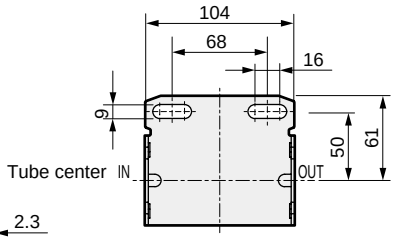

· For the metal bowl (resin cock), the dimensions of the manual drain cock and the auto-drain manual override are the same.

Note: The C type bracket and pipe adaptor set attachments cannot be used together.

Optional dimensions

● Metal bowl (metal cock) F3000-G4/F4000-G4/F8000-G4

Manual metal cock (FM, F1M)

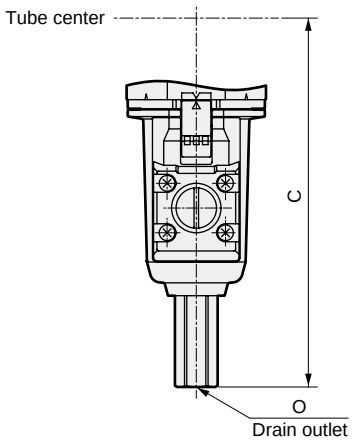

Manual cock (M)

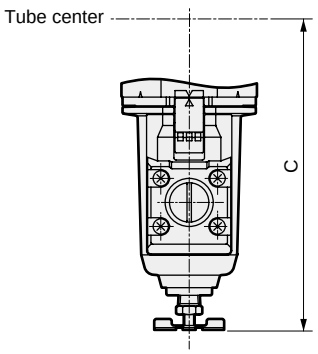

Dimensions table

Model No.	With auto-drain		Manual cock
	C	O	C
F3000-G4	164	Rc1/4	143.5
F4000-G4	187	Rc1/4	166.5
F8000-G4	266	Rc1/4	245.5

Optional parts diagram

Element

Element model No. / Model	5 µm Element	0.3 µm Element (Y)
F3000-G4	F3000-ELEMENT	F3000-ELEMENT-Y
W3000-G4,W3100-G4	W3000-ELEMENT	W3000-ELEMENT-Y
F4000-G4	F4000-ELEMENT	F4000-ELEMENT-Y
W4000-G4,W4100-G4	W4000-ELEMENT	W4000-ELEMENT-Y
F8000-G4	F8000-ELEMENT	F8000-ELEMENT-Y
W8000-G4,W8100-G4	W8000-ELEMENT	W8000-ELEMENT-Y

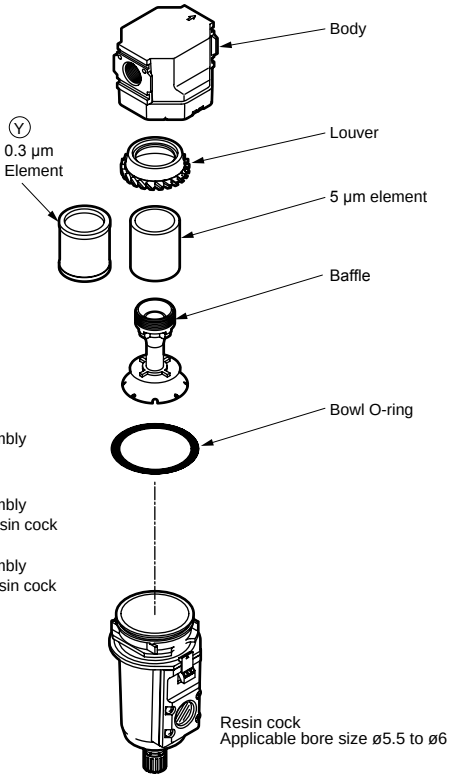

(FM)
Metal bowl (metal cock) assembly
NO auto-drain with manual metal cock

(F1M)
Metal bowl (metal cock) assembly
NC auto-drain with manual metal cock

(M)
Metal bowl (metal cock) assembly
with manual cock

(Blank)
Metal bowl (resin cock) assembly
with manual resin cock

(F)
Metal bowl (resin cock) assembly
NO auto-drain with manual resin cock

(F1)
Metal bowl (resin cock) assembly
NC auto-drain with manual resin cock

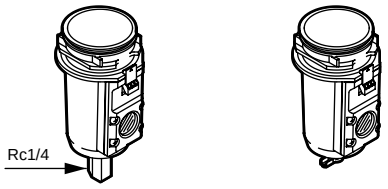

* 8000 Series large emission

(FFM)
Metal bowl (metal cock) assembly
NO large auto-drain with manual metal cock

(FF1M)
Metal bowl (metal cock) assembly
NC large auto-drain with manual metal cock

* 8000 Series large emission

(FF)
Metal bowl (resin cock) assembly
NO large auto-drain with manual resin cock

(FF1)
Metal bowl (resin cock) assembly
NC large auto-drain with manual resin cock

Repair parts kit

(A set including a louver, baffle, element and bowl O-ring)

Repair parts kits model No. / Model	5 µm Element	0.3 µm Element (Y)
F3000-G4	F3000-KIT	F3000-KIT-Y
F4000-G4	F4000-KIT	F4000-KIT-Y
F8000-G4 *1	F8000-KIT	F8000-KIT-Y

*1: In the case of the F8000, the baffle, element and O-ring of the bowl are a package set.

Bowl assembly (set of bowl assembly and bowl O-ring)

Bowl assembly model No. / Product option / Type	Metal bowl (resin cock) assembly with manual resin cock	NO auto-drain metal bowl (resin cock) assembly with manual resin cock	NC auto-drain metal bowl (resin cock) assembly with manual resin cock	Metal bowl (metal cock) assembly with manual cock	NC auto-drain metal bowl/cock (manual) Assy	NC auto-drain metal bowl/cock (manual) Assy
	Blank	F	F1	M	FM	F1M
F3000,W3000,W3100-G4	F3000-G4-BOWL-M1	F3000-G4-BOWL-FM1	F3000-G4-BOWL-F1M1	F3000-G4-BOWL-M	F3000-G4-BOWL-FM	F3000-G4-BOWL-F1M
F4000,F8000,W4000, W4100,W8000,W8100-G4	F4000-G4-BOWL-M1	F4000-G4-BOWL-FM1	F4000-G4-BOWL-F1M1	F4000-G4-BOWL-M	F4000-G4-BOWL-FM	F4000-G4-BOWL-F1M

Bowl assembly model No. / Product option / Type	NO large auto-drain metal bowl, resin cock (manual) Assy	NC large auto-drain metal bowl, resin cock (manual) Assy	NO large auto-drain metal bowl, resin cock Assy, man metal cock	NC large auto-drain metal bowl, resin cock Assy, man metal cock
	FF	FF1	FFM	FF1M
F8000,W8000,W8100-G4	F8000-G4-BOWL-FFM1	F8000-G4-BOWL-FF1M1	F8000-G4-BOWL-FFM	F8000-G4-BOWL-FF1M

MEMO



Regulator Flame-resistant series

R3000/R4000/R8000-G4 Series

● Port size: 1/4 to 1

JIS symbol 

RoHS CAD

Specifications

Item		R3000-G4	R4000-G4	R8000-G4
Working fluid		Compressed air		
Max. working pressure	MPa	1.0 (≈150 psi, 10 bar)		
Proof pressure	MPa	1.5 (≈220 psi, 15 bar)		
Ambient / fluid temperatures	°C	5 (41°F) to 60 (140°F)		
Set pressure	MPa	0.05 (≈7.3 psi, 0.5 bar) to 0.85 (≈120 psi, 8.5 bar)		
Pressure relief		With relief mechanism		
Port size	Rc,NPT,G	1/4,3/8 (1/2 uses an adaptor)	1/4,3/8,1/2 (3/4 uses an adaptor)	3/4,1 (1 1/4 uses an adaptor)
Weight	kg	0.52	0.77	1.6
Standard specifications		Exterior: Flame-resistant material, nut for panel mounting		Exterior: Flame-resistant material

Option weight

* Add to the weight of the standard accessories.

Unit: kg

Code	Pressure gauge	Pipe adaptor set						Attachment			
	T*	A8*W	A10*W	A15*W	A20*W	A25*W	A32*W	BW	B3W	G49P	G59P
R3000-G4	0	0.16	0.16	0.16				0.17	0.07	0.086	0.115
R4000-G4	0	0.16	0.16	0.16	0.16			0.21	0.11	0.086	0.115
R8000-G4	0				0.53	0.53	0.53	0.36		0.086	0.115

How to order

R3000 – 8 ○ – G4 – LT – ○ – A8W ○

Ⓐ Model No. | Flame-resistant | Ⓑ Port size | Ⓒ Port thread | Ⓓ Option | Ⓔ Display unit *7 | Ⓕ Pipe adaptor set (included) | Ⓖ Other attachments

* Refer to page 30 for the explanation of the option.

Code		Description	Ⓐ Model No. R3000	R4000	R8000
Ⓑ Port size					
8		1/4	●	●	
10		3/8	●	●	
15		1/2		●	
20		3/4			●
25		1			●
Ⓒ Port thread					*1
Blank		Rc thread	●	●	●
N		NPT thread	●	●	●
G		G thread	●	●	●
Ⓓ Option					*2
Pressure range	**Blank**	0.05 to 0.85 MPa	●	●	●
	L	0.05 to 0.35 MPa *3	●	●	●
Pressure relief	**Blank**	With relief mechanism	●	●	●
	N	Non-relief	●	●	●
Pressure gauge	**T**	No pressure gauge (gauge port (1/4) is assembled sealed)	●	●	●
	T8	Pressure gauge ready (gauge port (1/4) is left open)	●	●	●
Flow direction	**Blank**	Standard flow (left → right), knob downward	●	●	●
	X1	Reverse flow (right → left), knob downward	●	●	●
	X2	Standard flow (left → right), knob upward	●	●	●
	X3	Reverse flow (right → left), knob upward	●	●	●
Ⓔ Display unit					
Blank		MPa display (Rc thread), psi display (NPT thread), bar display (G thread)	●	●	●
J1		MPa display (NPT, G thread)	●	●	●
Ⓕ Pipe adaptor set (included)					*4 Page 350
Blank		Not included	●	●	●
A8*W		1/4 pipe adaptor set (white)	●	●	
A10*W		3/8 pipe adaptor set (white)	●	●	
A15*W		1/2 pipe adaptor set (white)	●	●	
A20*W		3/4 pipe adaptor set (white)		●	●
A25*W		1 pipe adaptor set (white)			●
A32*W		1 1/4 pipe adaptor set (white)			●
*** Adaptor thread**					
Blank		Rc thread	●	●	●
N		NPT thread	●	●	●
G		G thread	●	●	●
Ⓖ Other attachments					*6 Pages 346, 363
Blank		Not included	●	●	●
BW		C type bracket (silver)	●	●	●
B3W	*5	L type bracket (silver)	●	●	
G49P		G49D-8-P10(L:G49D-8-P04)	●	●	●
G59P		G59D-8-P10(L:G59D-8-P04)	●	●	●

⚠ Precautions for model No. selection

*1: When G threads or NPT threads are selected, the IN, OUT and gauge ports are the targets.
*2: When selecting options for several items, list options in order from the top.
*3: The pressure gauge's indication range is 0 to 0.4 MPa for the option "L".
*4: The pipe adaptor set and C type bracket cannot be used together.
*5: For details on mounting the L type bracket, refer to (2. Regulator) of "⚠ Cautions and Installation & Adjustment" (page 357).
*6: The pressure gauge (included) can be selected only when Ⓒ Port thread is Rc thread.
*7: Display unit options when selecting NPT threads: If Blank is selected, the pressure unit is psi and the temperature display unit is °F.
When G thread and Blank display unit option are selected, the pressure unit will be bar and the temperature display unit will be °C.
When NPT/G thread and "J1" display unit option are selected, the pressure unit will be MPa and the temperature display unit will be °C.

Flow characteristics

● R3000-8-G4

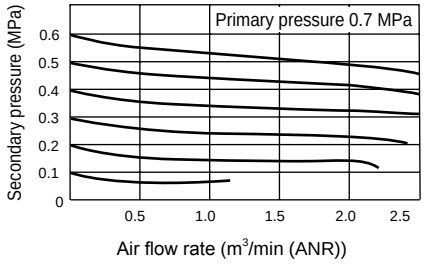

● R3000-10-G4

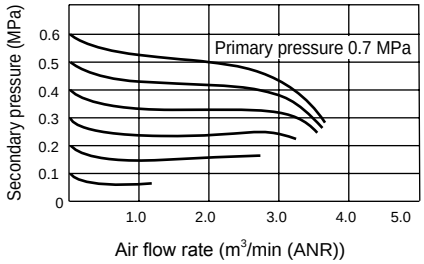

● R4000-8-G4

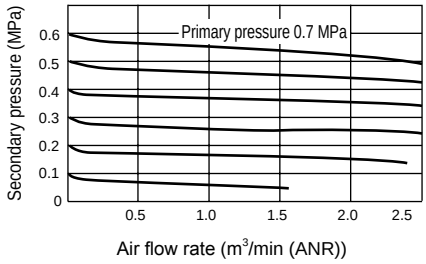

● R4000-10-G4

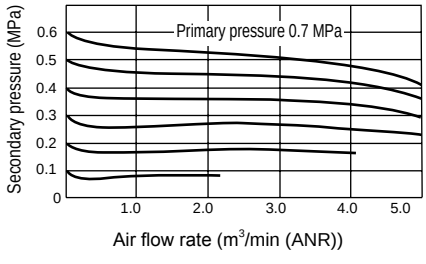

● R4000-15-G4

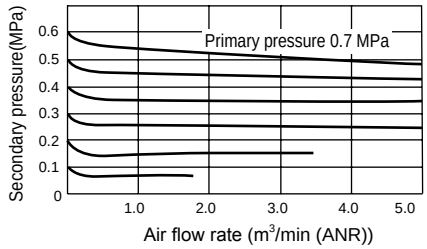

● R8000-20-G4

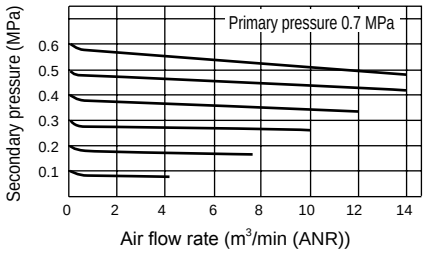

● R8000-25-G4

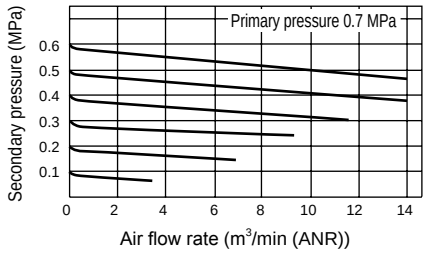

Pressure characteristics

● R3000-G4

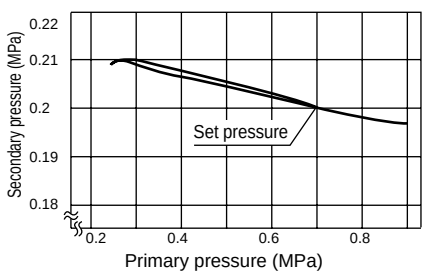

● R4000-G4

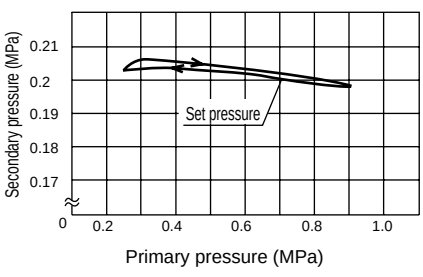

● R8000-G4

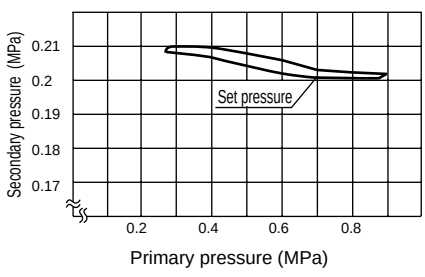

Internal structure and parts list

● R3000-G4

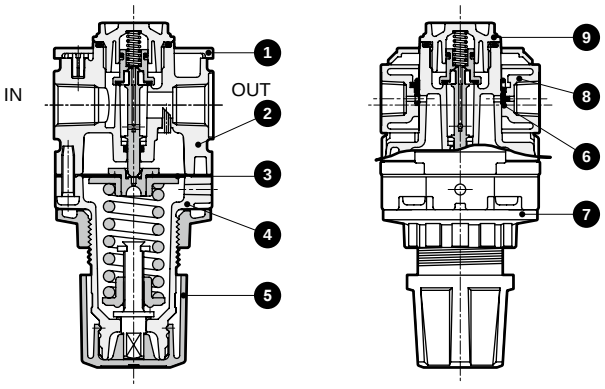

● R4000-G4

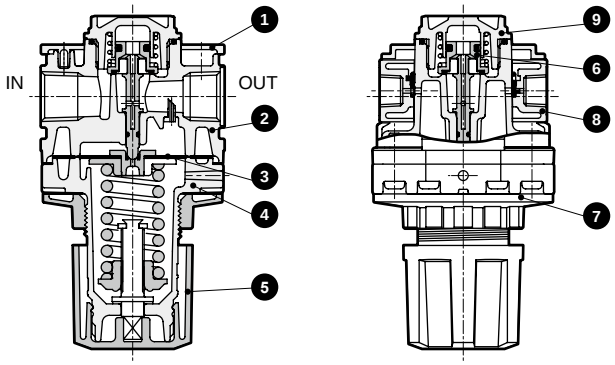

● R8000-G4

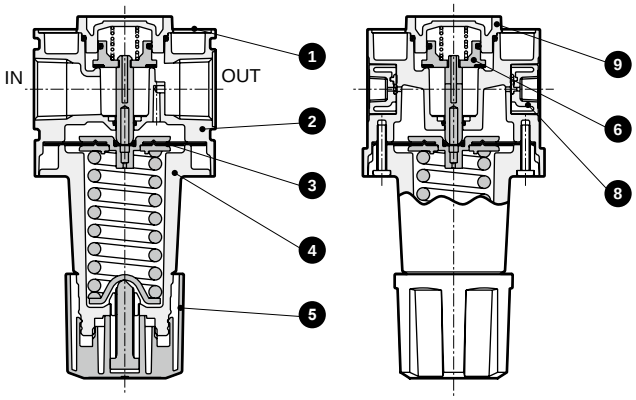

No.	Part name	Material		
		R3000-G4	R4000-G4	R8000-G4
1	Plate cover	ABS resin (*1)		
2	Body	Aluminum alloy die-casting		
3	Diaphragm assembly	Zinc alloy die-casting, nitrile rubber		
4	Cover	Aluminum alloy die-casting		
5	Knob	PBT resin (*1)		
6	Valve assembly	Copper alloy, hydrogenated nitrile rubber, polyacetal resin		
7	Mounting nut	PBT resin (*1)		-
8	Gauge plug assembly	Polyamide resin (*1), nitrile rubber, steel		
9	Bottom plug	Aluminum alloy die-casting		

*1: Flame-resistant resin, UL94 Standards V-0 or equivalent
*2: Refer to page 286 for repair parts.

Dimensions CAD

● R3000-G4

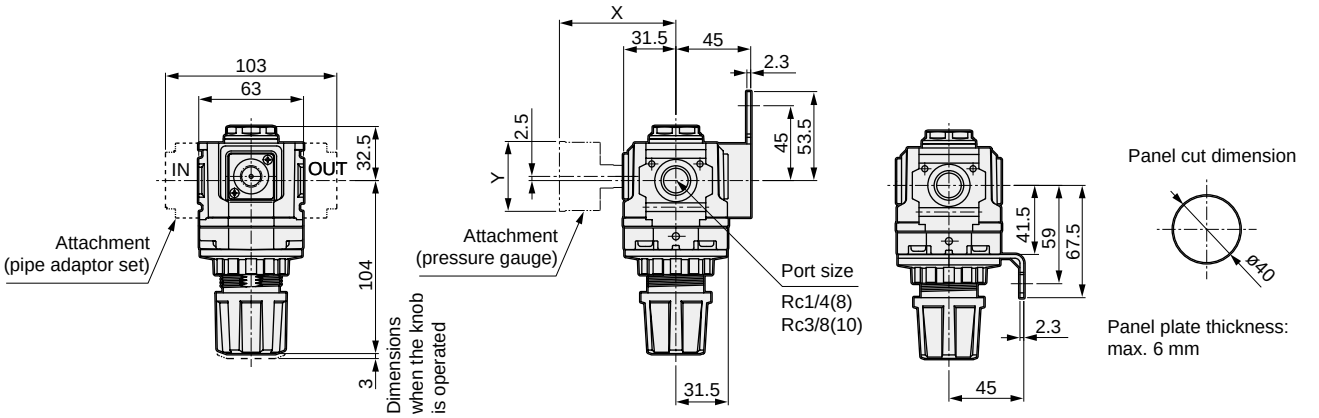

· Attachment

C type bracket (-BW)
Part model No.: B320
· Material: Steel
Zinc plated

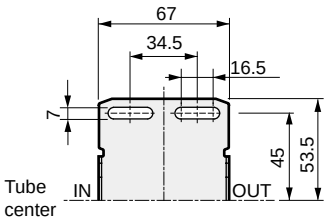

L type bracket (-B3W)
Part model No.: B330
· Material: Steel
Zinc plated

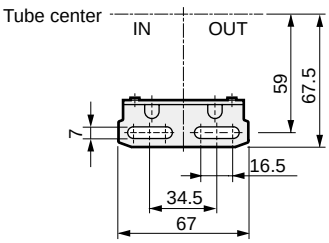

Pressure gauge attached optional dimensions table

Pressure gauge	X	Y
G49P	(69.5)	ø43.5
G59P	(72)	ø52

Note: The C type bracket and pipe adaptor set attachments cannot be used together.

● R4000-G4

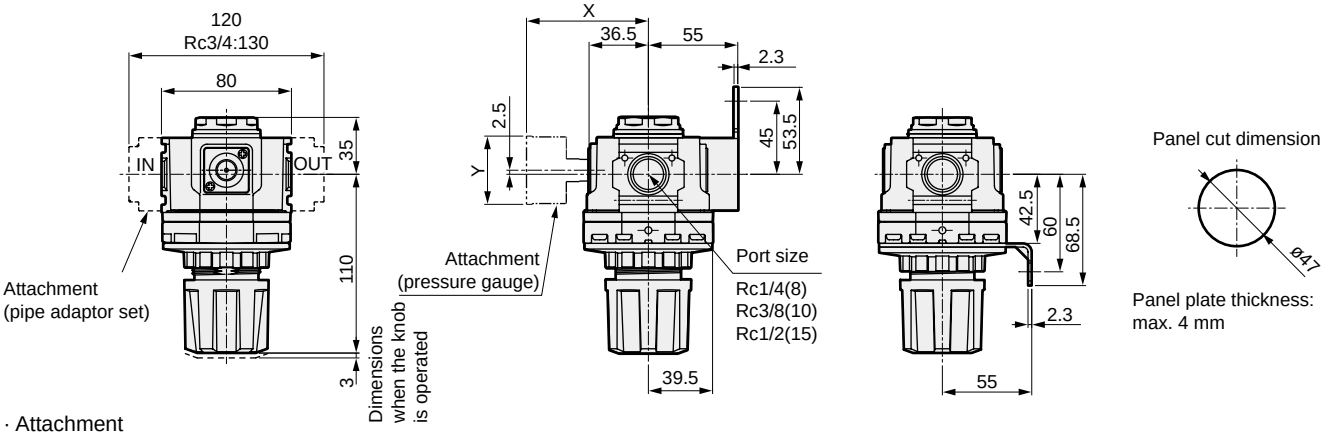

· Attachment

C type bracket (-BW)
Part model No.: B420
· Material: Steel
Zinc plated

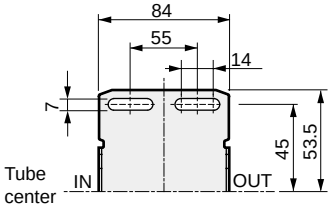

L type bracket (-B3W)
Part model No.: B430
· Material: Steel
Zinc plated

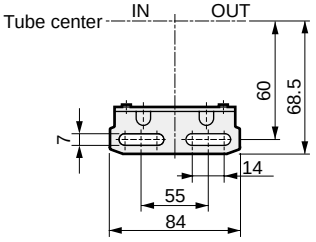

Pressure gauge attached optional dimensions table

Pressure gauge	X	Y
G49P	(74.5)	ø43.5
G59P	(77)	ø52

Note: The C type bracket and pipe adaptor set attachments cannot be used together.

Dimensions

● R8000-G4

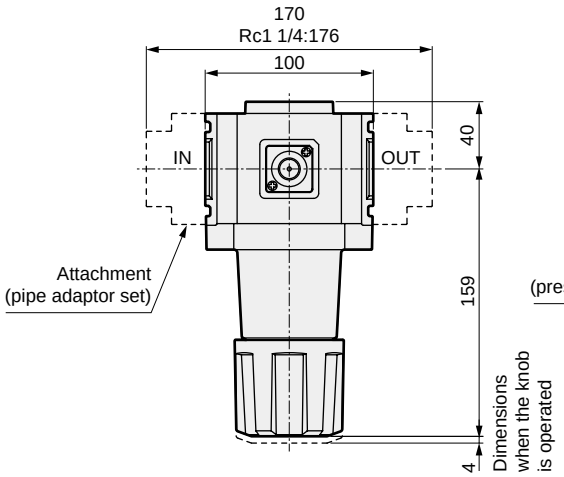

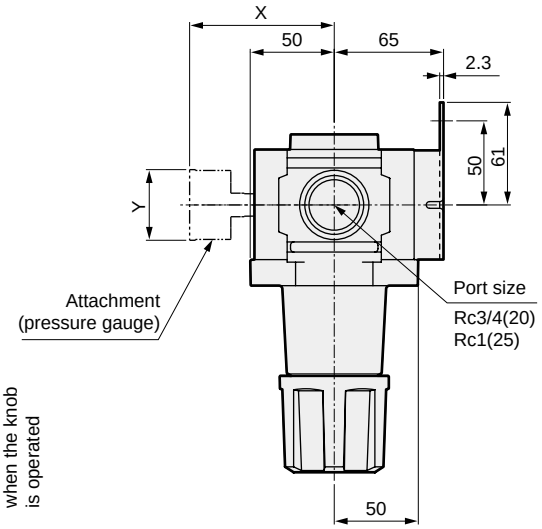

· Attachment
C type bracket (-BW)
Part model No.: B820
· Material: Steel
Zinc plated

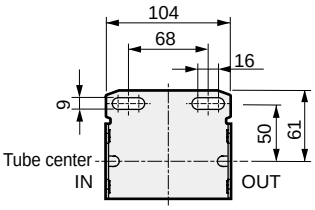

Pressure gauge attached optional dimensions table

Pressure gauge	X	Y
G49P	(84.5)	ø43.5
G59P	(87)	ø52

Note: The C type bracket and pipe adaptor set attachments cannot be used together.



Reverse regulator Flame-resistant series

R3100/R4100/R8100-G4 Series

From secondary pressure to primary side with reverse flow function built in.

● Port size: 1/4 to 1

JIS symbol

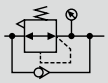

Specifications

Item		R3100-G4	R4100-G4	R8100-G4
Working fluid		Compressed air		
Max. working pressure	MPa	1.0 (≈150 psi, 10 bar)		
Proof pressure	MPa	1.5 (≈220 psi, 15 bar)		
Ambient / fluid temperatures	°C	5 (41°F) to 60 (140°F)		
Set pressure (*1)	MPa	0.05 (≈7.3 psi, 0.5 bar) to 0.85 (≈120 psi, 8.5 bar)		
Pressure relief		With relief mechanism		
Port size	Rc,NPT,G	1/4,3/8 (1/2 uses an adaptor)	1/4,3/8,1/2 (3/4 uses an adaptor)	3/4,1 (1 1/4 uses an adaptor)
Weight	kg	0.52	0.77	1.6
Standard specifications		Exterior: Flame-resistant material, nut for panel mounting		Exterior: Flame-resistant material

*1 : Refer to the set pressure range for the back pressure given on page 282 when selecting the model.
*2 : Check that the primary pressure is at least 0.05 MPa more than the secondary pressure.

Option weight

* Add to the weight of the standard accessories.

Unit: kg

Code	Pressure gauge	Pipe adaptor set						Attachment			
	T*	A8*W	A10*W	A15*W	A20*W	A25*W	A32*W	BW	B3W	G49P	G59P
R3100-G4	0	0.16	0.16	0.16				0.17	0.07	0.086	0.115
R4100-G4	0	0.16	0.16	0.16	0.16			0.21	0.11	0.086	0.115
R8100-G4	0				0.53	0.53	0.53	0.36		0.086	0.115

How to order

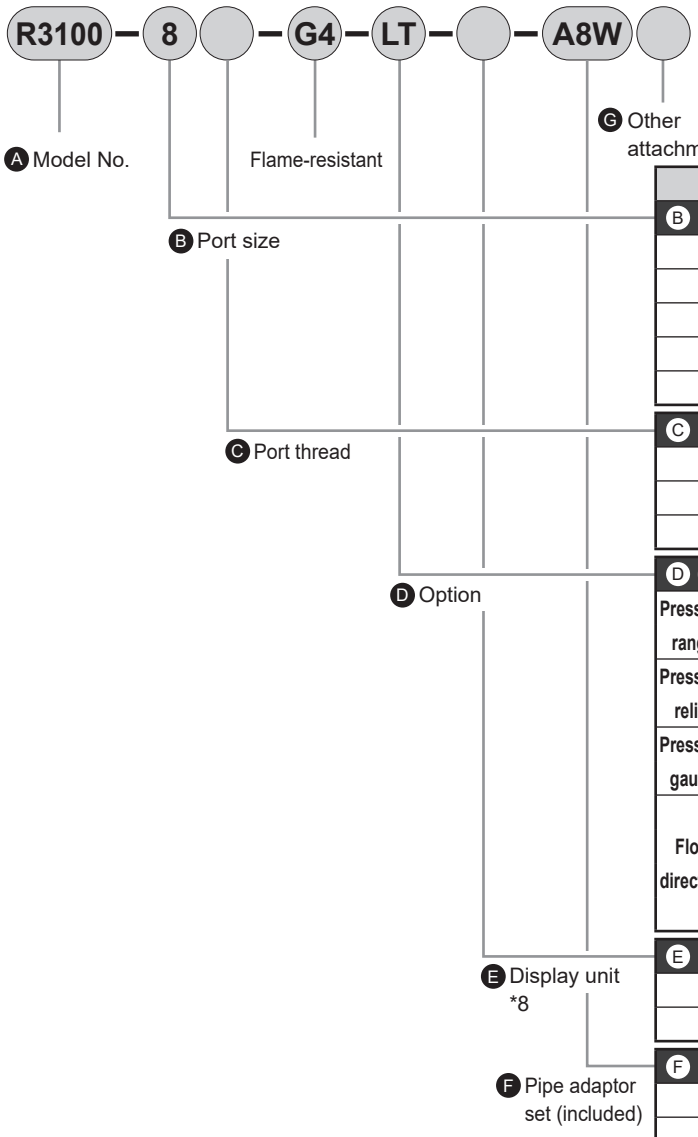

* Refer to page 30 for the explanation of the option.

Code	Description	A Model No. R3100	R4100	R8100
B Port size				
8	1/4	●	●	
10	3/8	●	●	
15	1/2		●	
20	3/4			●
25	1			●
C Port thread				*1
Blank	Rc thread	●	●	●
N	NPT thread	●	●	●
G	G thread	●	●	●
D Option				*2, *3
Pressure range: **Blank**	0.05 to 0.85 MPa	●	●	●
Pressure range: **L**	0.05 to 0.35 MPa *4	●	●	●
Pressure relief: **Blank**	With relief mechanism	●	●	●
Pressure relief: **N**	Non-relief	●	●	●
Pressure gauge: **T**	No pressure gauge (gauge port (1/4) is assembled sealed)	●	●	●
Pressure gauge: **T8**	Pressure gauge ready (gauge port (1/4) is left open)	●	●	●
Flow direction: **Blank**	Standard flow (left → right), knob downward	●	●	●
Flow direction: **X1**	Reverse flow (right → left), knob downward	●	●	●
Flow direction: **X2**	Standard flow (left → right), knob upward	●	●	●
Flow direction: **X3**	Reverse flow (right → left), knob upward	●	●	●
E Display unit				
Blank	MPa display (Rc thread), psi display (NPT thread), bar display (G thread)	●	●	●
J1	MPa display (NPT, G thread)	●	●	●
F Pipe adaptor set (included)				*5 Page 350
Blank	Not included	●	●	●
A8*W	1/4 pipe adaptor set (white)	●	●	
A10*W	3/8 pipe adaptor set (white)	●	●	
A15*W	1/2 pipe adaptor set (white)	●	●	
A20*W	3/4 pipe adaptor set (white)		●	●
A25*W	1 pipe adaptor set (white)			●
A32*W	1 1/4 pipe adaptor set (white)			●
*** Adaptor thread**				
Blank	Rc thread	●	●	●
N	NPT thread	●	●	●
G	G thread	●	●	●
G Other attachments				*7 Pages 346, 363
Blank	Not included	●	●	●
BW	C type bracket (silver)	●	●	●
B3W *6	L type bracket (silver)	●	●	
G49P	G49D-8-P10(L:G49D-8-P04)	●	●	●
G59P	G59D-8-P10(L:G59D-8-P04)	●	●	●

⚠Precautions for model No. selection

*1: G and NPT threads are available for IN, OUT and gauge ports.
*2: When selecting options for several items, list options in order from the top.
3: Positions of check valve and pressure gauge cannot be changed. If the IN and OUT directions must be reversed, indicate "X1" at the end of the option field.
*4: The pressure gauge's indication range is 0 to 0.4 MPa for the option "L".
*5: The pipe adaptor set and C type bracket cannot be used together.
*6: For details on mounting the L type bracket, refer to 2. Regulator of "⚠Cautions and Installation & Adjustment" (page 357).
*7: The pressure gauge (included) can be selected only when C Port thread is Rc thread.
*8: Display unit options when selecting NPT threads: If Blank is selected, the pressure unit is psi and the temperature display unit is °F.
When G thread and Blank display unit option are selected, the pressure unit will be bar and the temperature display unit will be °C.
When NPT/G thread and "J1" display unit option are selected, the pressure unit will be MPa and the temperature display unit will be °C.

Flow characteristics

● R3100-8-G4

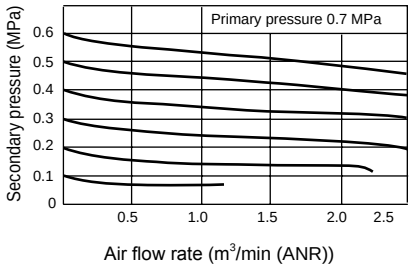

● R3100-10-G4

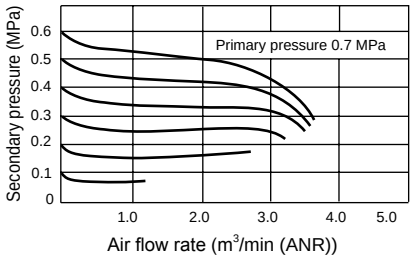

● R4100-8-G4

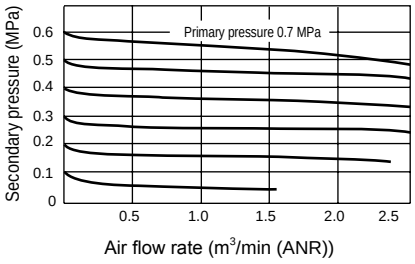

● R4100-10-G4

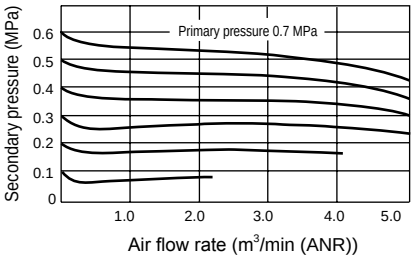

● R4100-15-G4

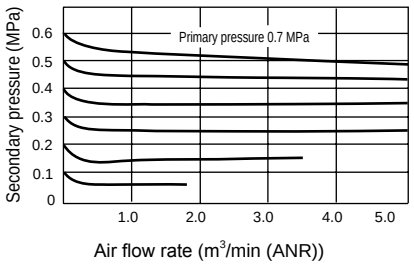

● R8100-20-G4

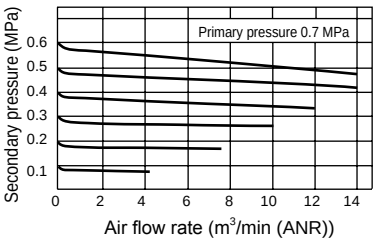

● R8100-25-G4

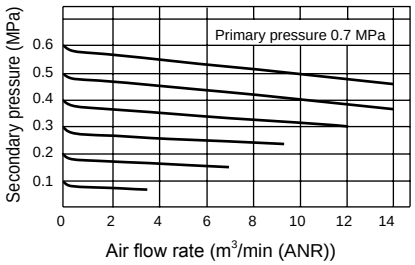

● Set pressure range to back pressure

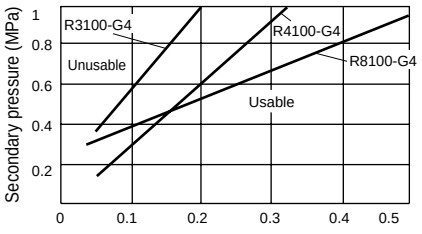

Note: The area above the graph line shows the unusable range and that below the graph line shows the usable range.
Example: If R4100-W is set to the set pressure 0.2 MPa and the secondary back pressure is 0.6 MPa or more, the secondary pressure will not be released to the primary side.

Pressure characteristics

● R3100-G4

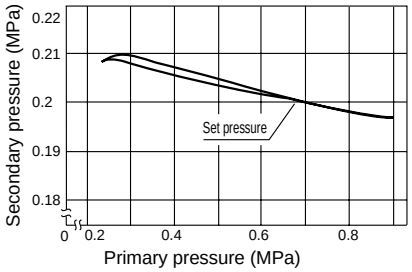

● R4100-G4

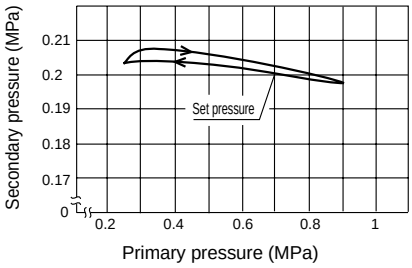

● R8100-G4

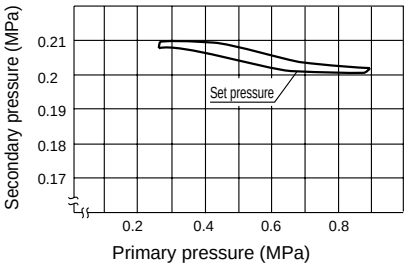

Internal structure and parts list

● R3100-G4

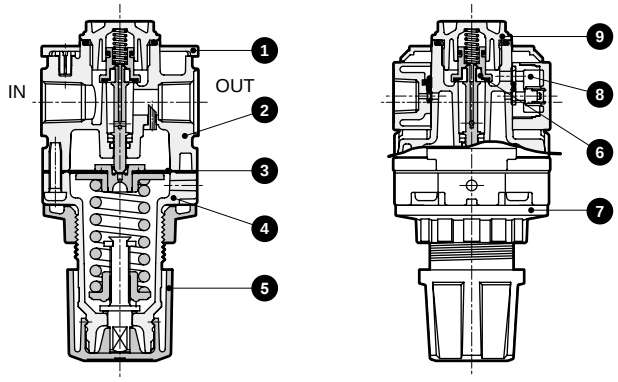

● R4100-G4

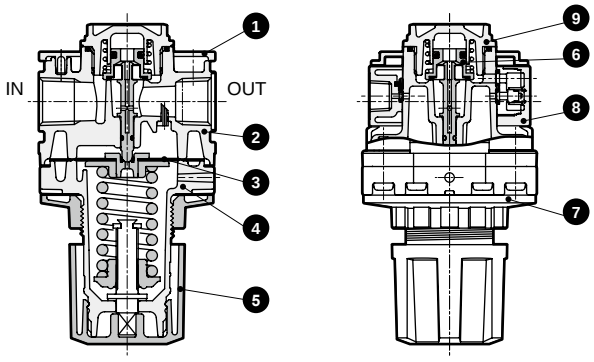

● R8100-G4

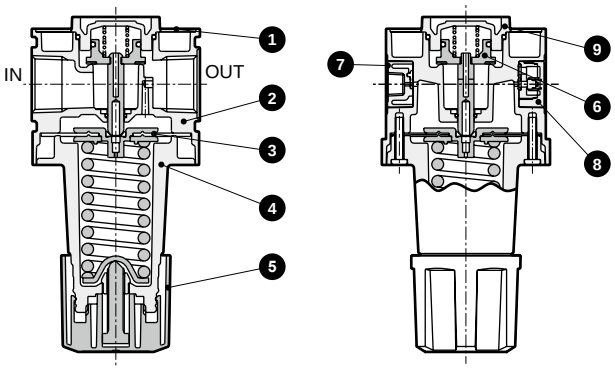

No.	Part name	Material		
		R3100-G4	R4100-G4	R8100-G4
1	Plate cover	ABS resin (*1)		
2	Body	Aluminum alloy die-casting		
3	Diaphragm assembly	Zinc alloy die-casting, nitrile rubber		
4	Cover	Aluminum alloy die-casting		
5	Knob	PBT resin (*1)		
6	Valve assembly	Copper alloy, hydrogenated nitrile rubber, polyacetal resin		
7	Gauge plug assembly	Polyamide resin (*1), nitrile rubber, steel		
8	Check valve total assembly	PBT resin, nitrile rubber, stainless steel wire, steel, aluminum		
9	Bottom plug	Aluminum alloy die-casting		
10	Mounting nut	PBT resin (*1)		-

*1: Flame-resistant resin, UL94 Standards V-0 or equivalent
*2: Refer to page 286 for repair parts kits.

Functions

When the primary pressure is introduced from the IN side, the check valve functions as a regular regulator because it closes with primary pressure and spring load. When primary pressure is released by a switching valve such as a residual pressure exhaust valve, the check valve opens with secondary pressure. Pressure in the diaphragm chamber is released and pressure drops. This causes the diaphragm to be pressed down by the pressure adjustment spring. The main valve (valve assembly) opens, and the air on the OUT side is discharged.

● Circuit diagram

When cylinder head side and rod side pressures differ

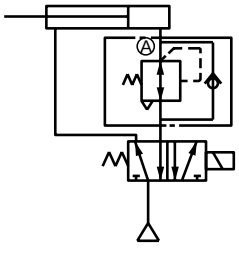

Note: When the primary side pressure is released, back pressure A must be equal to or less than the set pressure range of the regulator corresponding to the back pressure shown in the graph.

Dimensions CAD

● R3100-G4

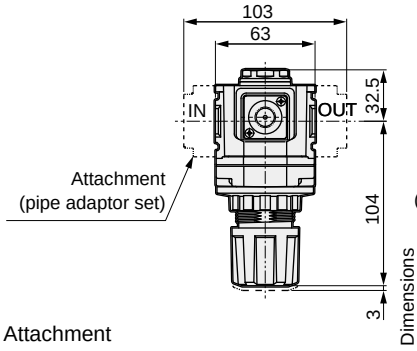

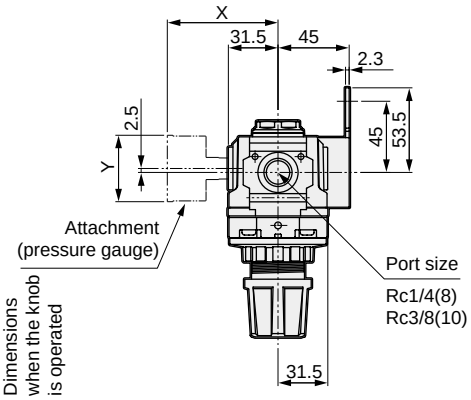

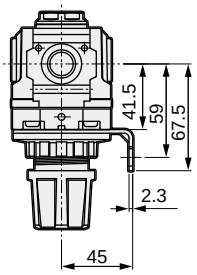

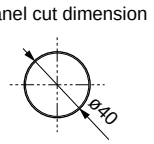

Panel plate thickness:
max. 6 mm

· Attachment

C type bracket (-BW)
Part model No.: B320
· Material: Steel
Zinc plated

L type bracket (-B3W)
Part model No.: B330
· Material: Steel
Zinc plated

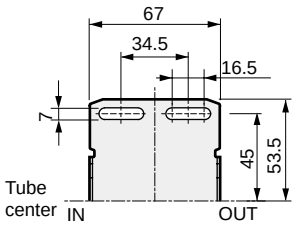

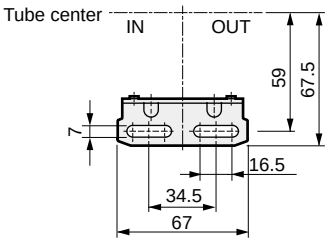

Pressure gauge attached optional dimensions table

Pressure gauge	X	Y
G49P	(69.5)	ø43.5
G59P	(72)	ø52

Note: The C type bracket and pipe adaptor set attachments cannot be used together.

● R4100-G4

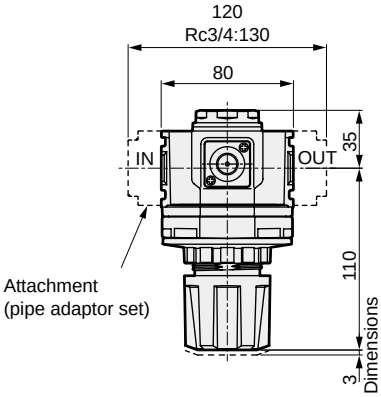

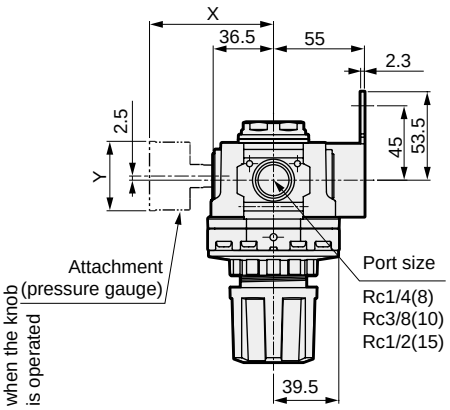

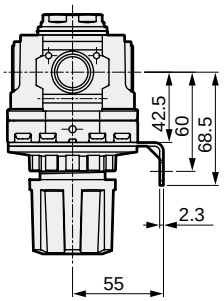

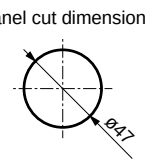

Panel plate thickness:
max. 4 mm

· Attachment

C type bracket (-BW)
Part model No.: B420
· Material: Steel
Zinc plated

L type bracket (-B3W)
Part model No.: B430
· Material: Steel
Zinc plated

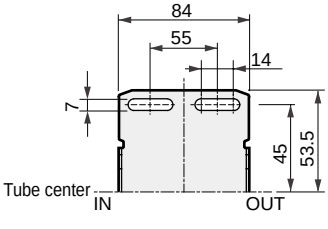

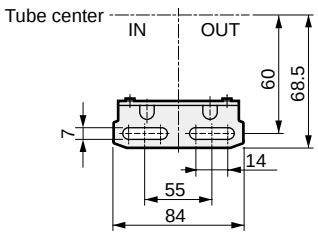

Pressure gauge attached optional dimensions table

Pressure gauge	X	Y
G49P	(74.5)	ø43.5
G59P	(77)	ø52

Note: The C type bracket and pipe adaptor set attachments cannot be used together.

Dimensions

● R8100-G4

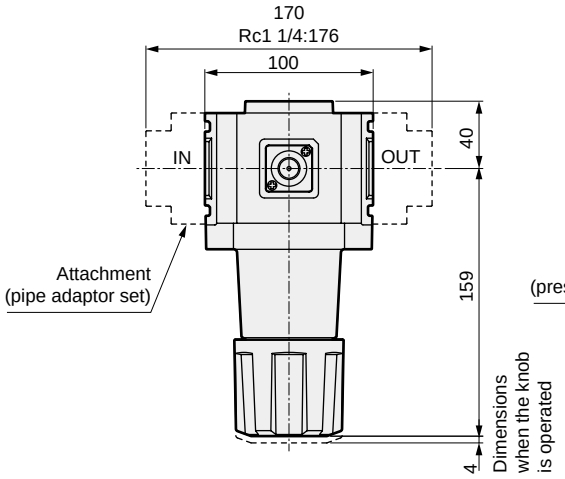

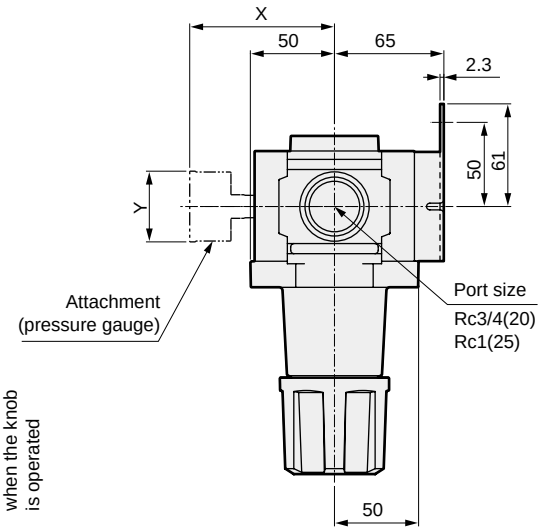

· Attachment
C type bracket (-BW)
Part model No.: B820
· Material: Steel
Zinc plated

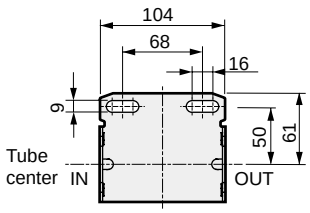

Pressure gauge attached optional dimensions table

Pressure gauge	X	Y
G49P	(84.5)	ø43.5
G59P	(87)	ø52

Note: The C type bracket and pipe adaptor set attachments cannot be used together.

Optional parts diagram

Repair parts kit (set of diaphragm assembly, valve assembly, bottom spring, bottom O-ring)

Repair parts kits model No. / Model	Relief diaphragm	Non-relief diaphragm
R3000-G4,R3100-G4	R3000-KIT	R3000-KIT-N
R4000-G4,R4100-G4	R4000-KIT	R4000-KIT-N
R8000-G4,R8100-G4	R8000-KIT	R8000-KIT-N

Valve assembly (set of valve assembly, bottom spring, bottom O-ring)

Model	Valve assembly model No.
R3000-G4,R3100-G4	R3000-VALVE-ASSY
R4000-G4,R4100-G4	R4000-VALVE-ASSY
R8000-G4,R8100-G4	R8000-VALVE-ASSY

Check valve assembly for reverse regulator

Model	Check valve assembly model No.
R3100-G4,W3100-G4 R4100-G4,W4100-G4 R8100-G4,W8100-G4	R3100-G4-CHECK-VALVE-ASSY

Adjusting spring

Adjusting spring model No. / Model	Standard spring (0.05 to 0.85MPa)	Low pressure spring (0.05 to 0.35 MPa)
R3000-G4,R3100-G4 W3000-G4,W3100-G4	R3000-SPRING	R3000-SPRING-L
R4000-G4,R4100-G4 W4000-G4,W4100-G4	R4000-SPRING	R4000-SPRING-L
R8000-G4,R8100-G4	R8000-SPRING	R8000-SPRING-L
W8000-G4,W8100-G4	W8000-SPRING	W8000-SPRING-L

Diaphragm assembly (only diaphragm assembly)

Diaphragm assembly model No. / Model	Relief diaphragm	Non-relief diaphragm
R3000-G4,R3100-G4 W3000-G4,W3100-G4	R3000-DIAPHRAGM-ASSY	R3000-DIAPHRAGM-ASSY-N
R4000-G4,R4100-G4 W4000-G4,W4100-G4	R4000-DIAPHRAGM-ASSY	R4000-DIAPHRAGM-ASSY-N
R8000-G4,R8100-G4	R8000-DIAPHRAGM-ASSY	R8000-DIAPHRAGM-ASSY-N
W8000-G4,W8100-G4	W8000-DIAPHRAGM-ASSY	W8000-DIAPHRAGM-ASSY-N

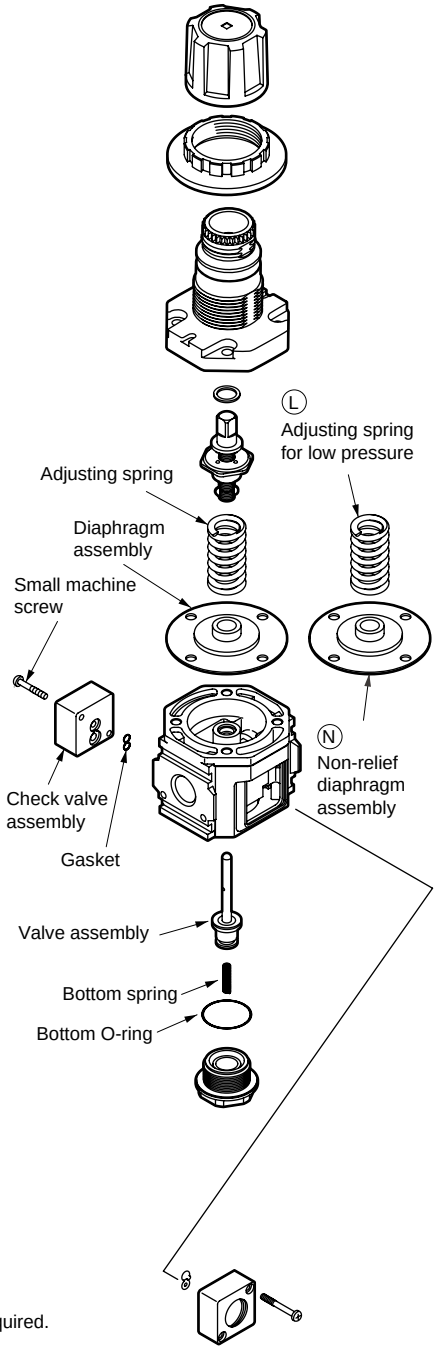

Gauge plug assembly (assembly of gauge plug, gasket and mounting screw)

Use when mounting the pressure gauge.

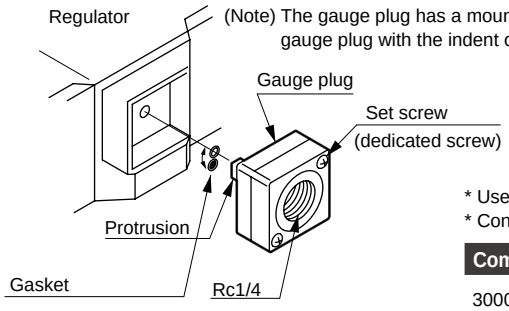

(Note) The gauge plug has a mounting orientation. Align the protrusion on the gauge plug with the indent on the body when assembling.

If the gasket is turned 180° as shown in the figure, the regulator pressure flows to the pressure gauge.

* Use when detecting external pressures as well.
* Consult with CKD when NPT or G threads are required.

Compatible model	Gauge plug valve assembly model No.
3000-G4 4000-G4 Series 8000-G4	R3000-G4-G-PLUG

Modular design
F.R.L.

Oil-prohibited Series

■ **Refining and pressure adjusting components/F.R.L. units**

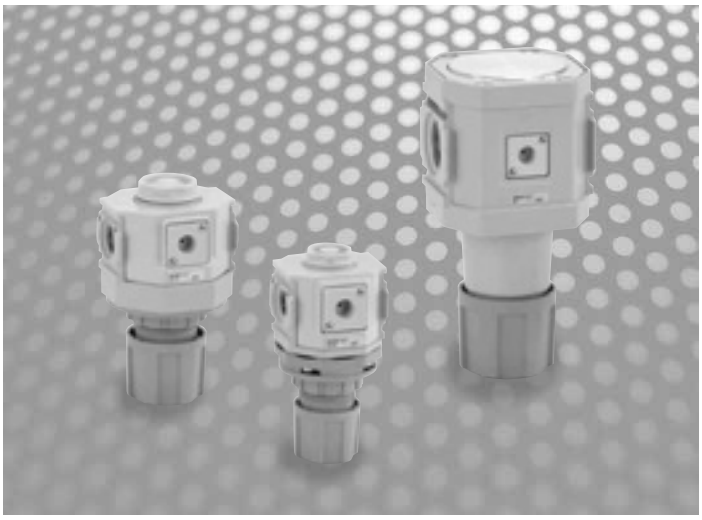

CONTENTS

Product introduction	24
Series variation	4 to 19
⚠ Safety precautions	354
Regulator	
● Regulator (RN*000)	288
Bracket (B)	346
Pressure gauge	363



Oil-prohibited regulator

RN3000/RN4000/RN8000 Series

Ideal for applications susceptible to grease, including liquid crystal, semiconductors, foodstuffs, medical use, and electronic parts.
All parts in the fluid passage area are degreased and washed, and use no grease.

● Port size: Rc1/4 to Rc1

JIS symbol 

RoHS

Specifications

Item	RN3000	RN4000	RN8000
Working fluid	Compressed air		
Max. working pressure MPa	0.8 (0.5 for low pressure)		
Proof pressure MPa	1.5 (≈220 psi, 15 bar)		
Ambient / fluid temperatures °C	5 (41°F) to 60 (140°F)		
Set pressure MPa	0.05 (≈7.3 psi, 0.5 bar) to 0.7 (≈100 psi, 7 bar)		
Pressure relief	With relief mechanism		
Port size Rc	1/4,3/8	1/4,3/8,1/2	3/4,1
Weight kg	0.5	0.7	1.9
Standard specifications	Fluid passage section: Oil-prohibited, nut for panel mount		Fluid passage section: Oil-prohibited

Applications

● Ionizer

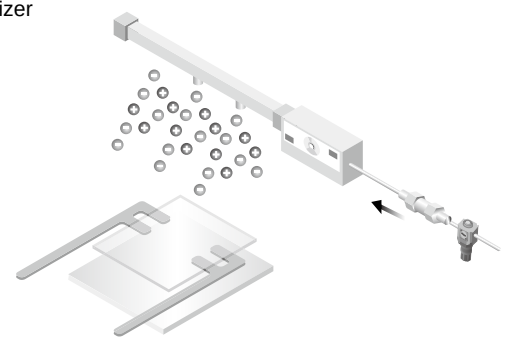

● Liquid crystal board transfer (non-contact)

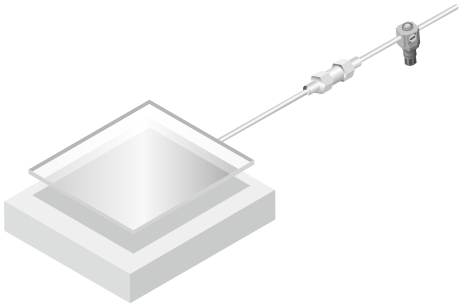

● Air knife

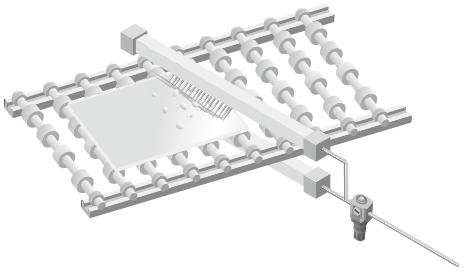

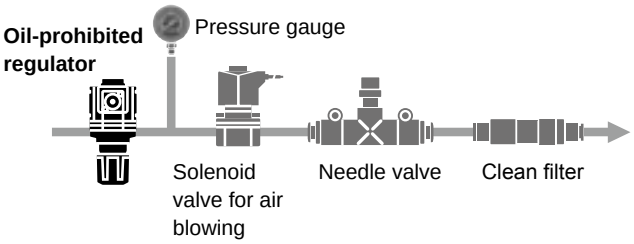

Option weight

* Add to the weight of the standard accessories.

Unit: kg

Code	Pressure gauge	Attachment			
	T*	BW	B3W	GX59	GY59
RN3000	0	0.17	0.07	0.14	0.14
RN4000	0	0.21	0.11	0.14	0.14
RN8000	0	0.36		0.14	0.14

How to order

RN3000 – 8 – LT – BW

- RN3000 – Ⓐ Model No.
- 8 – Ⓑ Port size
- LT – Ⓒ Option
- BW – Ⓓ Other attachments

* Refer to page 30 for the explanation of the option.

Code	Description	Ⓐ Model No. RN3000	RN4000	RN8000
Ⓑ Port size				
8	Rc1/4	●	●	
10	Rc3/8	●	●	
15	Rc1/2		●	
20	Rc3/4			●
25	Rc1			●
Ⓒ Option				***1**
Pressure range **Blank**	0.05 to 0.7MPa	●	●	●
Pressure range **L**	0.05 to 0.3 MPa *2	●	●	●
Pressure relief **Blank**	With relief mechanism	●	●	●
Pressure relief **N**	Non-relief	●	●	●
Pressure gauge **T** *3	No pressure gauge (gauge port is assembled sealed)	●	●	●
Pressure gauge **T8** *3	Optional (enclosed) round pressure gauge (pressure gauge port is left open)	●	●	●
Pressure gauge **T6** *4	PPX mounting option (pressure gauge mounting board is left open Port size Rc1/8)	●	●	●
Flow direction **Blank**	Standard flow (left → right)	●	●	●
Flow direction **X1**	Reverse flow (right → left)	●	●	●
Ⓓ Other attachments				**Pages 346, 363**
Blank	Not included	●	●	●
BW	C type bracket	●	●	●
B3W *5	L type bracket	●	●	
GX59	Pressure gauge: G59D-8-P10-P70 *6	●	●	●
GY59	Pressure gauge: G59D-8-P10-P94	●	●	●

⚠ Precautions for model No. selection

*1: When selecting options for several items, list options in order from the top.
*2: If "L" is selected for the pressure range option, the pressure gauge for low pressure (0 to 0.4 MPa) are selected.
*3: For "T" and "T8", a gauge plug is assembled. The gauge port is Rc1/4.
*4: The digital pressure sensor PPX must be prepared separately. The following model No. are recommended.
PPX-R10N-6M-P12
PPX-R10NH-6M-P12
*5: For details on mounting the L type bracket, refer to (2. Regulator) of "⚠ Cautions and Installation & Adjustment" (page 357).
*6: Attachment for options using copper alloy. All others are options and attachments which do not use copper alloys.

Flow characteristics

● RN3000-8

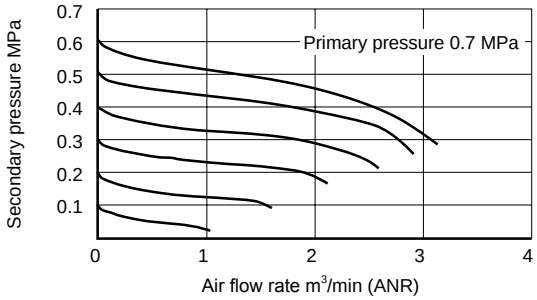

● RN3000-10

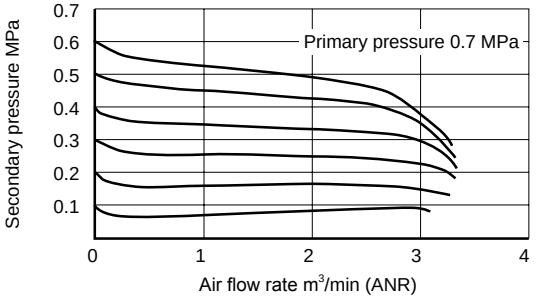

● RN4000-8

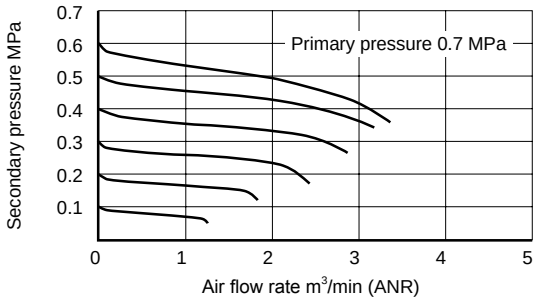

● RN4000-10

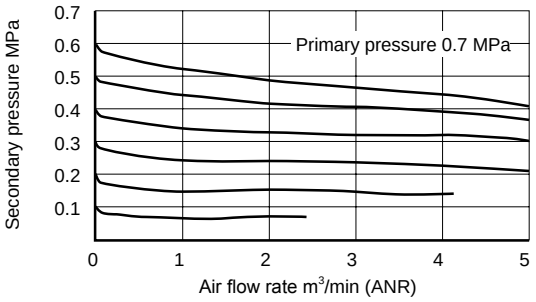

● RN4000-15

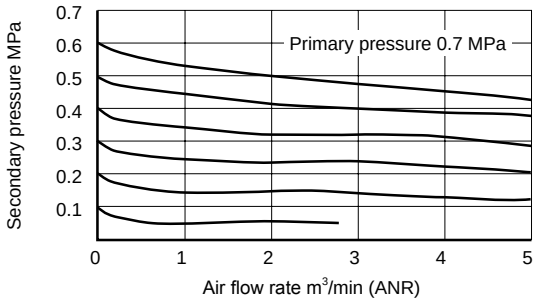

● RN8000-20

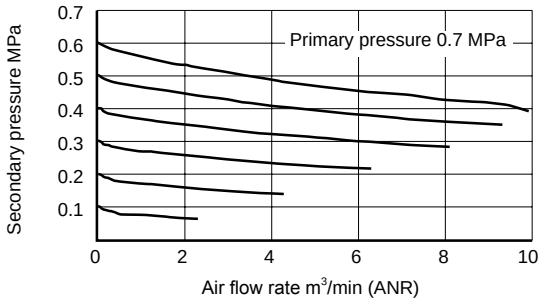

● RN8000-25

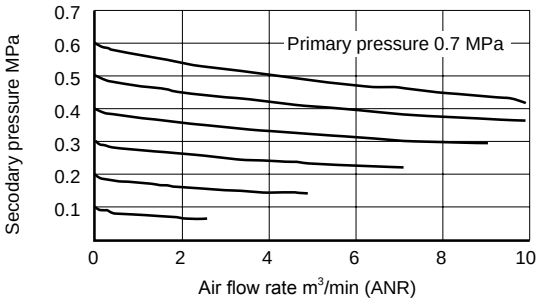

Pressure characteristics

● RN3000

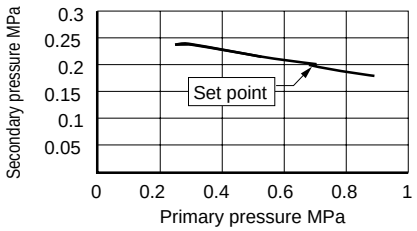

● RN4000

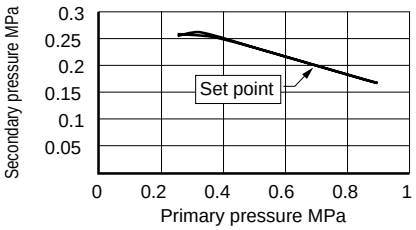

● RN8000

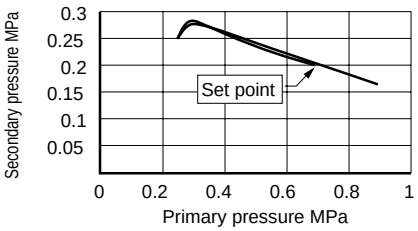

Internal structure and parts list

● RN3000

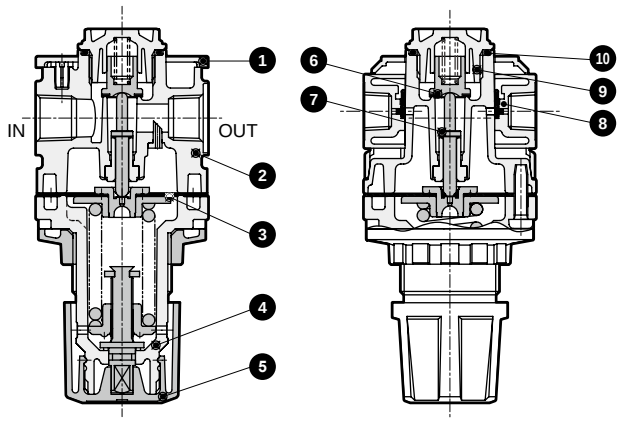

● RN4000

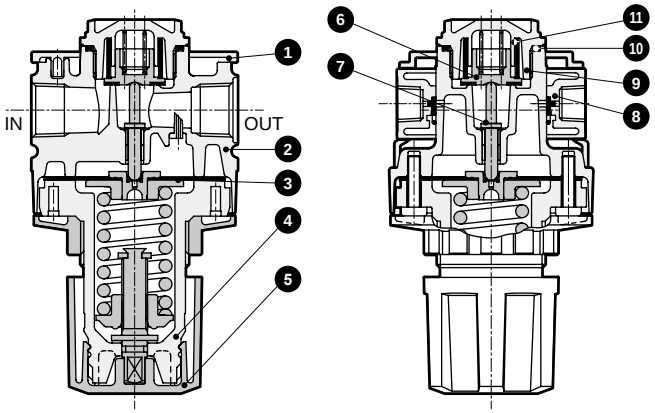

● RN8000

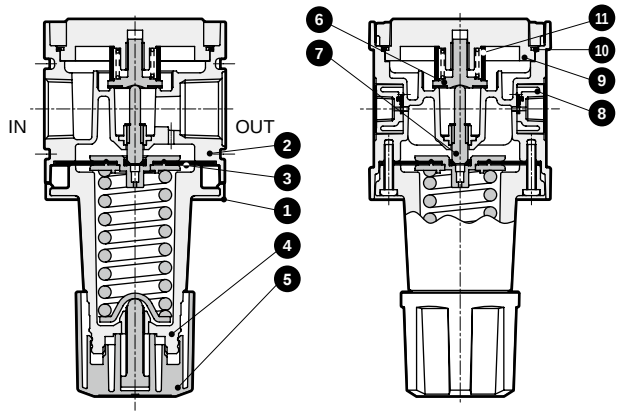

No.	Part name	Material		
		RN3000	RN4000	RN8000
1	Plate cover	ABS resin		
2	Body	Aluminum alloy die-casting		
3	Diaphragm assembly	Zinc alloy die-casting, nitrile rubber		
4	Cover	PBT resin		Aluminum alloy die-casting
5	Knob	Polyacetal resin		
6	Valve	Aluminum alloy, hydrogenated nitrile rubber		Stainless steel, hydrogenated nitrile rubber
7	Stem	Aluminum alloy		Stainless steel
8	Gauge plug assembly	Polyamide resin, nitrile rubber, steel		
9	Bottom cap	Polyacetal resin		Aluminum alloy
10	Bottom O-ring	Fluoro rubber		
11	Bottom rubber	-	Hydrogenated nitrile rubber	

Dimensions

● RN3000

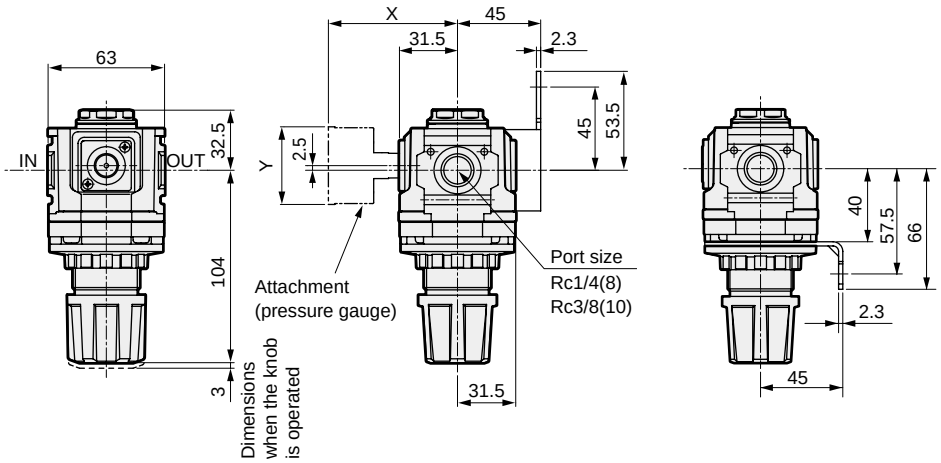

Panel cut dimension

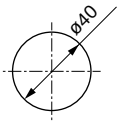

Panel plate thickness: max. 7 mm

· Attachment (C type bracket)
C type bracket (-BW)
Part model No.: B320
· Material: Steel
Zinc plated

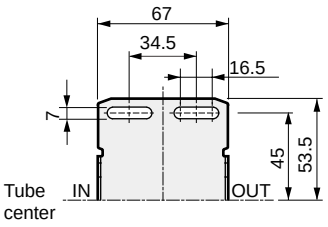

L type bracket (-B3W)
Part model No.: B330
· Material: Steel
Zinc plated

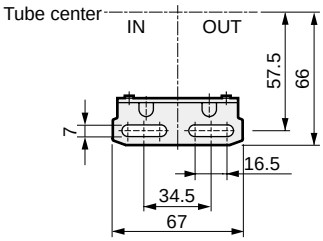

Pressure gauge attached optional dimensions table

Pressure gauge	X	Y
GX59	76.5	ø52
GY59	79	ø52

● RN4000

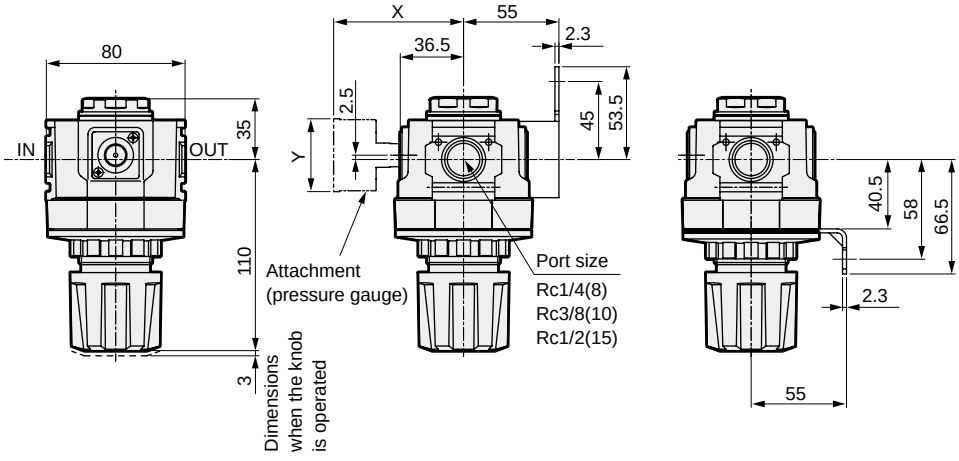

Panel cut dimension

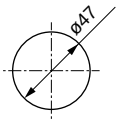

Panel plate thickness: max. 7 mm

· Attachment
C type bracket (-BW)
Part model No.: B420
· Material: Steel
Zinc plated

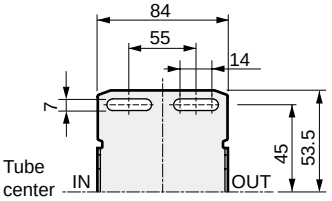

L type bracket (-B3W)
Part model No.: B430
· Material: Steel
Zinc plated

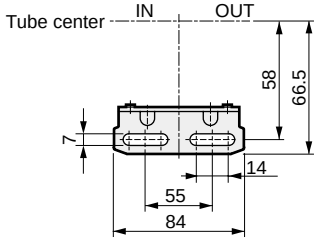

Pressure gauge attached optional dimensions table

Pressure gauge	X	Y
GX59	81.5	ø52
GY59	84	ø52

Dimensions

● RN8000

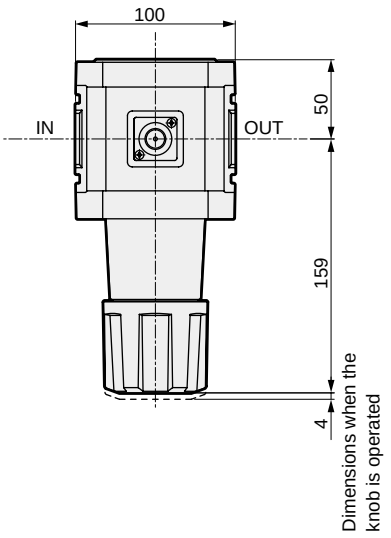

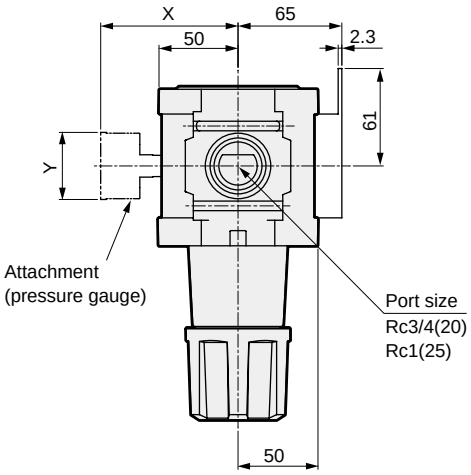

· Attachment
C type bracket (-BW)
Part model No.: B820
· Material: Steel
Zinc plated

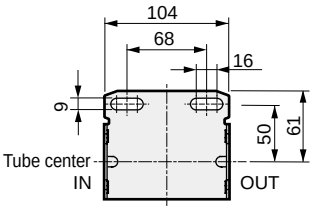

Pressure gauge attached optional dimensions table

Pressure gauge	X	Y
GX59	91.5	ø52
GY59	94	ø52

Modular design
F.R.L.

Medium pressure Series

■ **Refining and pressure adjusting components/F.R.L. unit**



CONTENTS

Product introduction 24
Series variation 4 to 19

Air filter

● Air filter (FM*000-W) 296
● Oil mist filter (MM*000-W) 302

Bracket/joiner (B/J) 346
Distributor (D*01-00) 348
Pipe adaptor (A***) 350

Regulator

● Regulator (RM*000-W) 308
⚠ Safety precautions 354

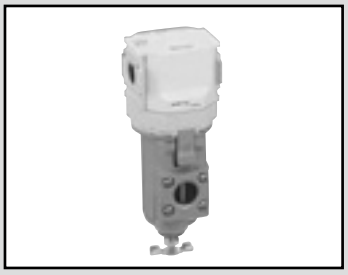

Air filter medium pressure Standard White Series

FM3000-W/FM4000-W/FM6000-W/FM8000-W Series

F3000 to 8000 Series medium pressure specifications

● Port size: 1/4 to 1

JIS symbol 

RoHS

Specifications

Model No.	FM3000-W	FM4000-W	FM6000-W	FM8000-W
Appearance				
Working fluid	Compressed air			
Max. working pressure MPa	1.6 (≈230 psi, 16 bar) (*1, *2)			
Proof pressure MPa	2.4 (≈350 psi, 24 bar) (*2)			
Ambient temperature °C	-5 (23°F) to 60 (140°F) (no freezing) (*1, *2)			
Fluid temperature °C	5 (41°F) to 60 (140°F) (*1, *2)			
Filtration rating μm	5 or 0.3			
Drain capacity cm^3	45	80	80	80 (*3)
Port size Rc,NPT,G	1/4,3/8	1/4,3/8,1/2	3/4,1	3/4,1
Weight kg	0.35	0.55	1.0	1.26

*1: In the case of "F" with auto-drain, the min. working pressure of auto-drain is 0.1 MPa.
Air is purged with initial drainage until pressure reaches 0.1 MPa. The max. working pressure is 1.5 MPa, the proof pressure is 2.25 MPa, the ambient temperature is -5 to 45°C , and the fluid temperature is 5 to 45°C.

*2: In the case of "F1" with auto-drain, the min. working pressure of auto-drain is 0.15 MPa.
The max. working pressure is 1.5 MPa, the proof pressure is 2.25 MPa, the ambient temperature is -5 to 45°C , and the fluid temperature is 5 to 45°C.

*3: Up to 170 cm^3 is stored with the manual drain cock only.

Option weight

* Add to the weight of the standard accessories.

Unit: kg

Code	Drain discharge		Attachment						Bracket
	F	F1	A8*W	A10*W	A15*W	A20*W	A25*W	A32*W	BW
FM3000	0.02	0.02	0.16	0.16	0.16				0.17
FM4000	0.02	0.02	0.16	0.16	0.16	0.16			0.21
FM6000	0.02	0.02				0.53	0.53	0.53	0.34
FM8000	0.02	0.02				0.53	0.53	0.53	0.36

How to order

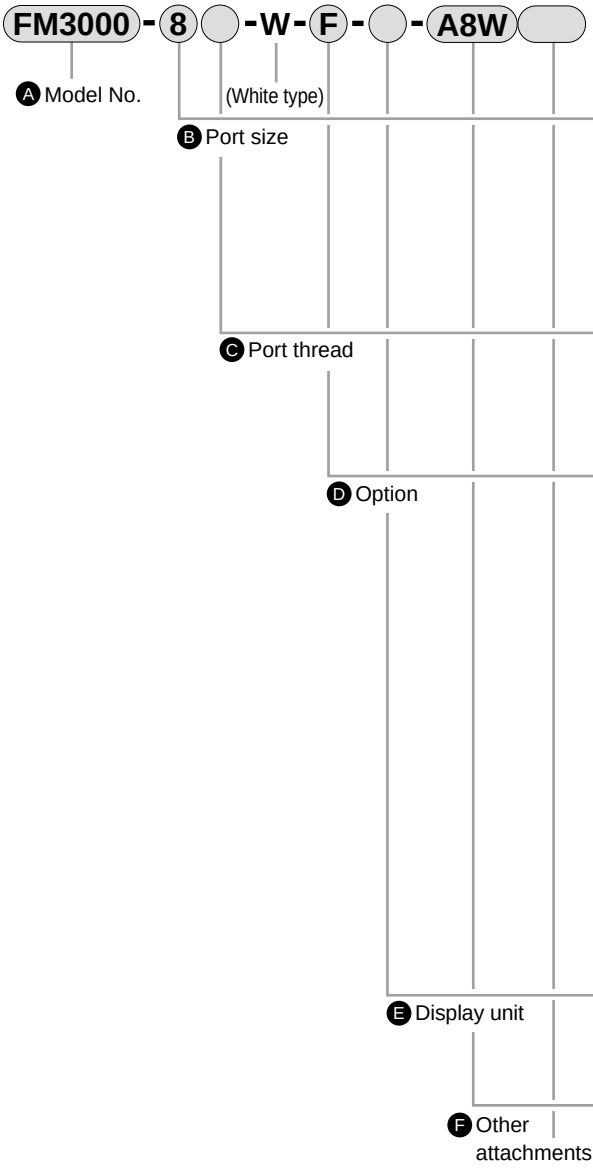

* Refer to page 30 for the explanation of the option.

Code	Description	A Model No. FM3000	FM4000	FM6000	FM8000
B Port size					
8	1/4	●	●		
10	3/8	●	●		
15	1/2		●		
20	3/4			●	●
25	1			●	●
C Port thread					*1
Blank	Rc thread	●	●	●	●
N	NPT thread	●	●	●	●
G	G thread	●	●	●	●
D Option					*2
Drain discharge *3, *4	**Blank** With manual drain cock	●	●	●	●
	F NO auto-drain (no press→Exhaust) drain outlet Rc1/8 Max. working press 1.5 MPa, max. operating amb temp 45°C	●	●	●	●
	F1 NC auto-drain (no press→no exhaust) drain outlet Rc1/8 Max. working press 1.5 MPa, max. operating amb temp 45°C	●	●	●	●
Bowl material	**Blank** Metal bowl	●	●	●	●
Element	**Blank** 5 µm	●	●	●	●
	Y 0.3 µm	●	●	●	●
Diff press detect	**Blank** Without differential pressure detection port	●	●	●	●
	Q With differential pressure detection port (Rc1/4)			●	●
Flow direction	**Blank** Standard flow (left → right)	●	●	●	●
	X1 Reverse flow (right → left)	●	●	●	●
E Display unit					
Blank	MPa display (Rc thread), psi display (NPT thread), bar display (G thread)	●	●	●	●
J1	MPa display (NPT, G thread)	●	●	●	●
F Other attachments					*5, *6 Page 350
Blank	Not included	●	●	●	●
A8*W	1/4 pipe adaptor set	●	●		
A10*W	3/8 pipe adaptor set	●	●		
A15*W	1/2 pipe adaptor set	●	●		
A20*W	3/4 pipe adaptor set		●	●	●
A25*W	1 pipe adaptor set			●	●
A32*W	1 1/4 pipe adaptor set			●	●
*** Adaptor thread**					
Blank	Rc thread	●	●	●	●
N	NPT thread	●	●	●	●
G	G thread	●	●	●	●
G Bracket (included)					Page 346
Blank	Not included	●	●	●	●
BW	C type bracket	●	●	●	●

⚠ Precautions for model No. selection

*1 : NPT and G threads are available for IN, OUT, and drain ports.
*2 : Select options for the drainage, bowl material, element and differential pressure detection. When selecting options for several items, list options in order from the top.
*3 : Refer to page 354 for the auto-drain usage conditions.
*4 : Only drain discharge “F” and “F1” of FM8000-W are large auto-drain.
*5 : The pipe adaptor set and C type bracket cannot be used together.
*6 : The joiner set is enclosed with the pipe adaptor set.

Flow characteristics

● FM3000-8-W

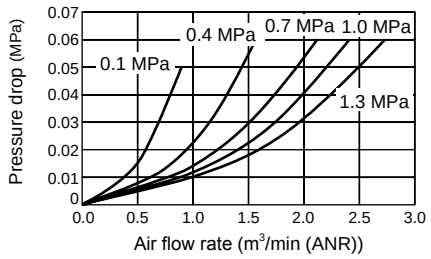

● FM3000-10-W

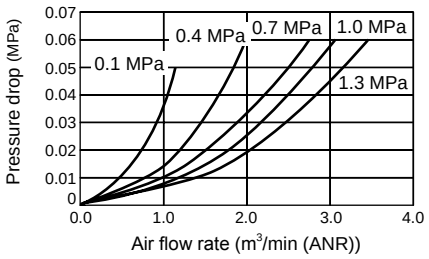

● FM4000-8-W

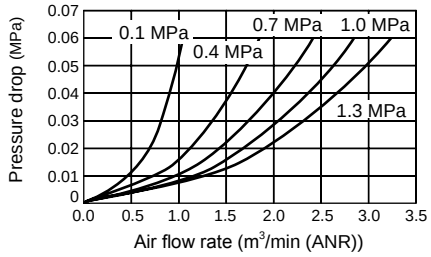

● FM4000-10-W

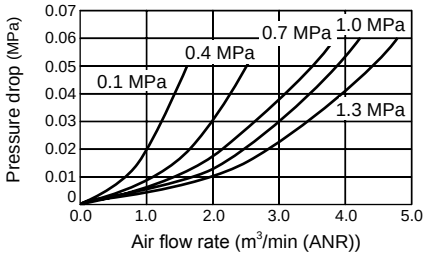

● FM4000-15-W

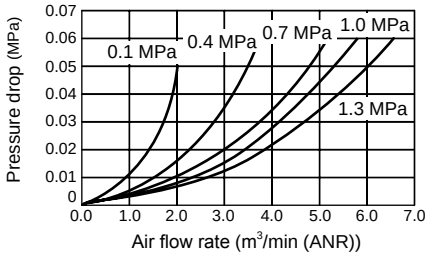

● FM6000-20-W

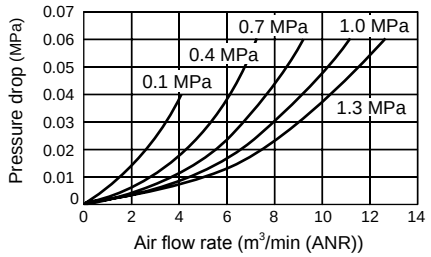

● FM6000-25-W

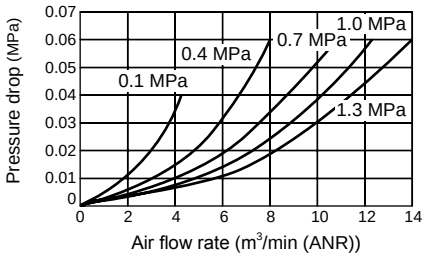

● FM8000-20-W

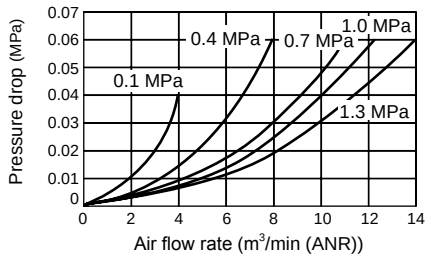

● FM8000-25-W

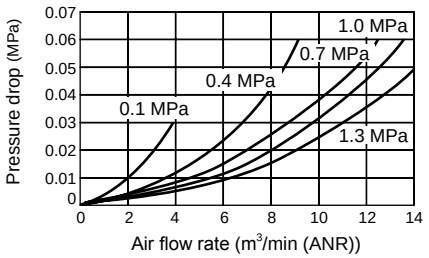

● FM3000
FM4000-*-W-Y (0.3 μm element)
FM6000
FM8000

(Max. processing flow rate)

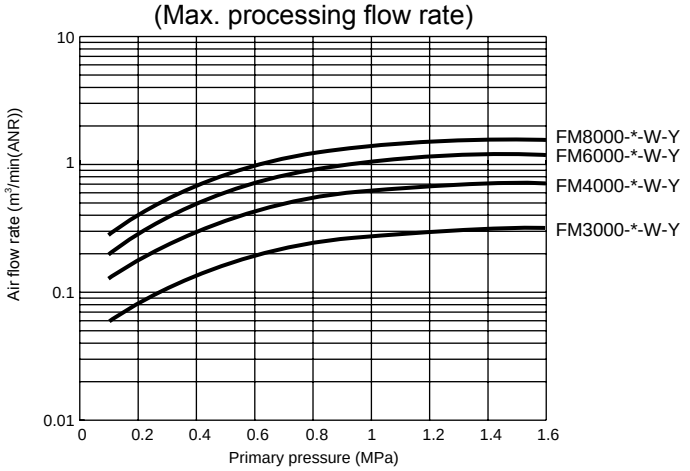

Internal structure and parts list

● FM3000-W/FM4000-W

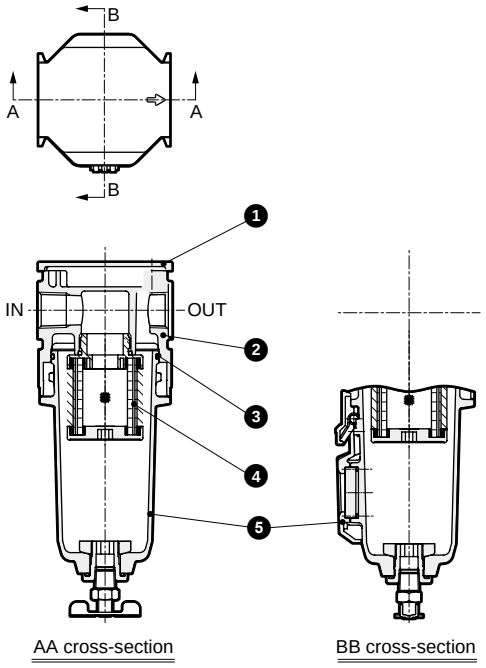

● FM6000-W

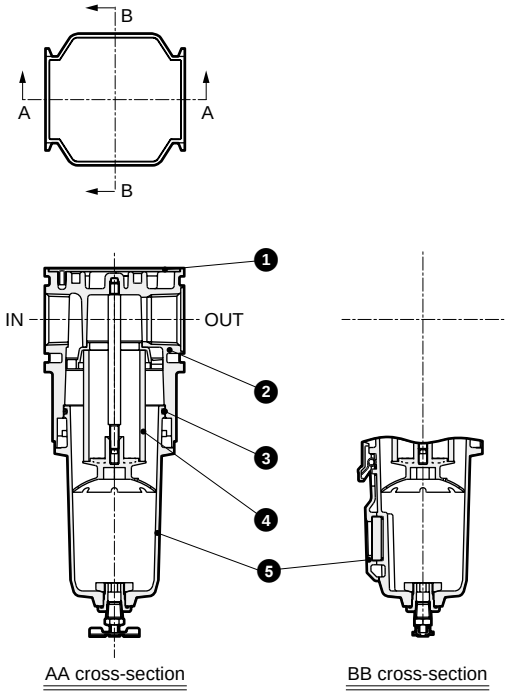

● FM8000-W

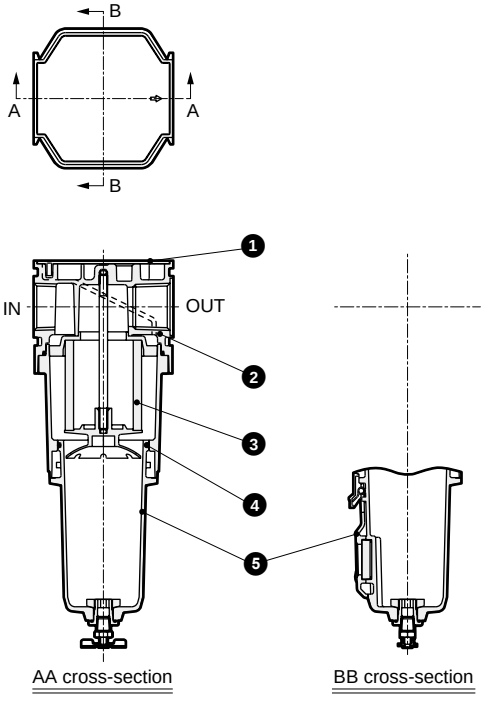

No.	Part name	Material
(1)	Plate cover	ABS resin
(2)	Body	Aluminum alloy die-casting
(3)	O-ring	Special nitrile rubber
(4)	Element (5 µm)	Polypropylene
	Element (0.3 µm)	-
(5)	Metal bowl assembly	Aluminum alloy die-casting, copper alloy, glass, nitrile rubber, steel, stainless steel

*1: Refer to pages 114 to 115 for repair parts element, repair kit and bowl assembly.

Dimensions

● FM3000-W

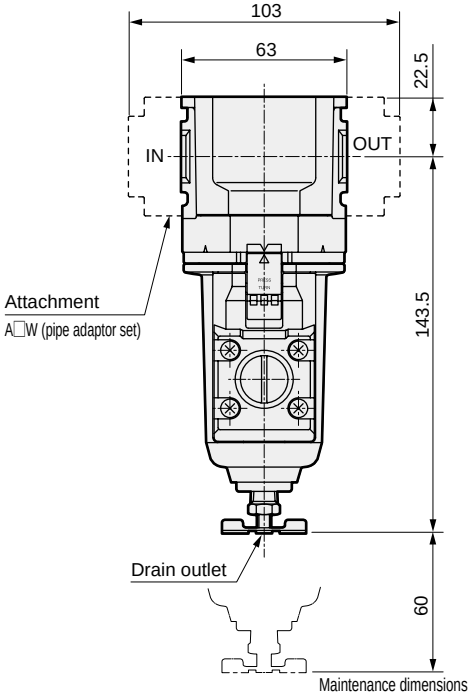

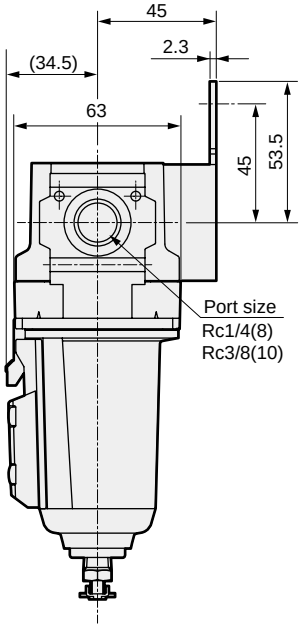

· Attachment
C type bracket (-BW)
Part model No.: B320
· Material: Steel
Zinc plated

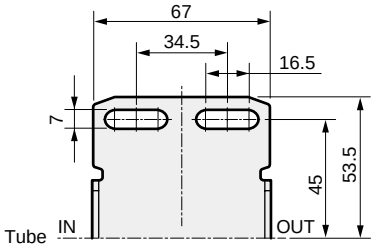

· Dimensions of options
Auto-drain (F, F1)

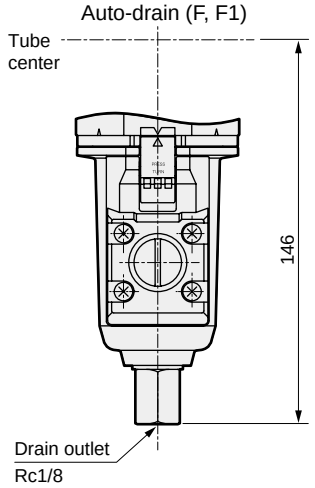

● FM4000-W

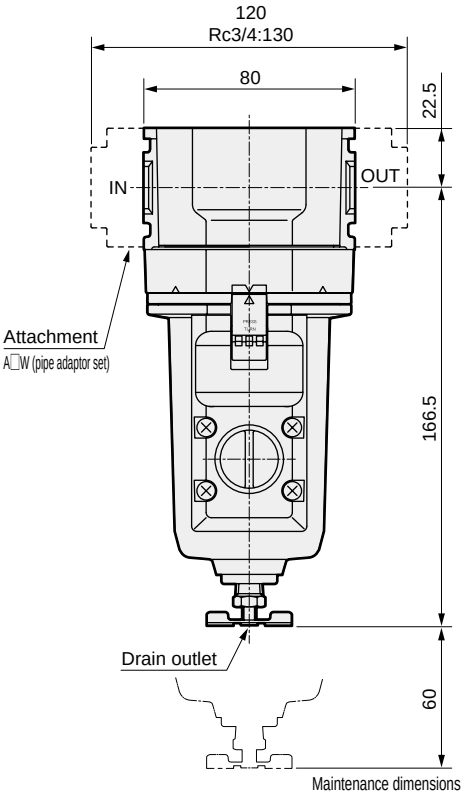

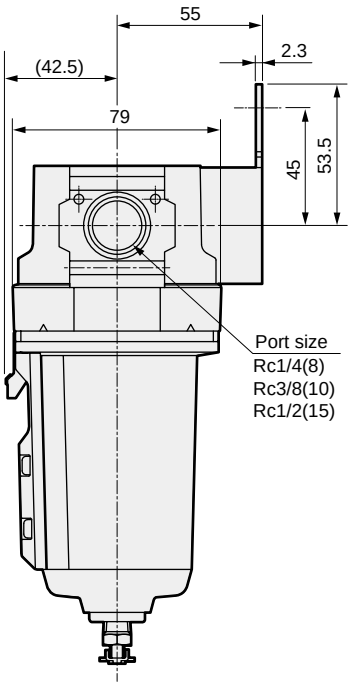

· Attachment
C type bracket (-BW)
Part model No.: B420
· Material: Steel
Zinc plated

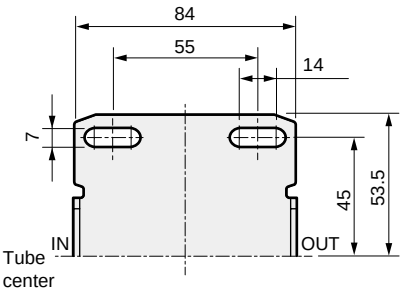

· Dimensions of options
Auto-drain (F, F1)

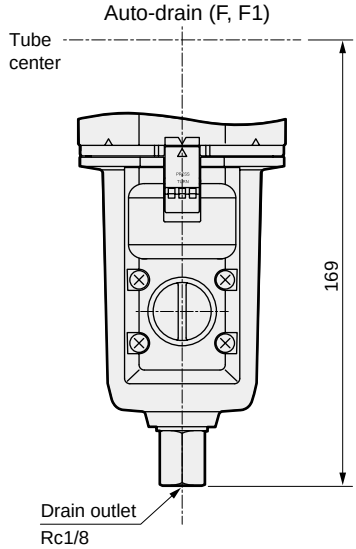

Dimensions

● FM6000-W

· Dimensions of options
With differential pressure detection port (Q)

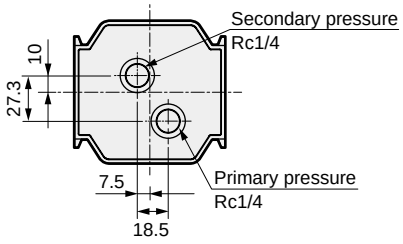

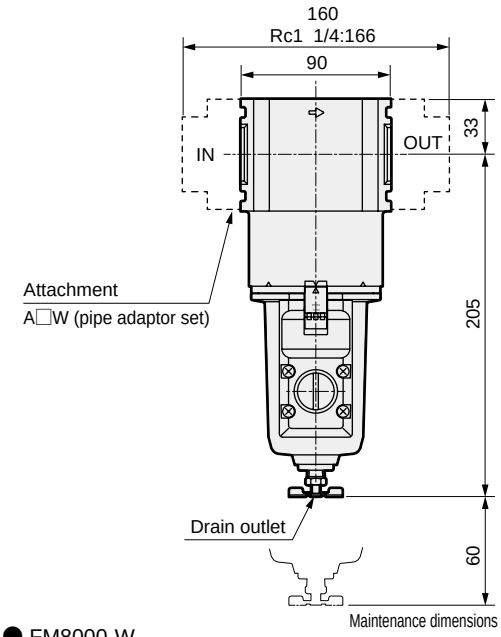

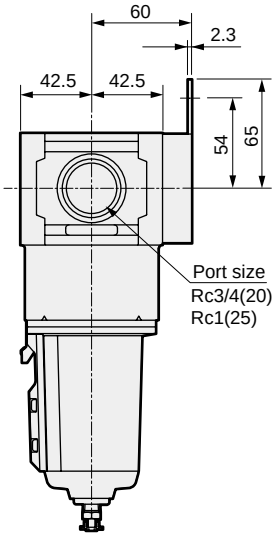

· Attachment
C type bracket (-BW)
Part model No.: B620
· Material: Steel
Zinc plated

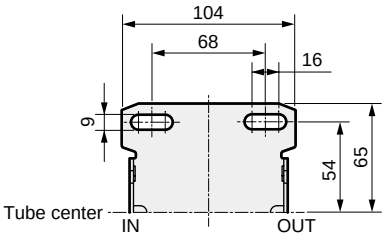

· Dimensions of options
Auto-drain (F, F1)

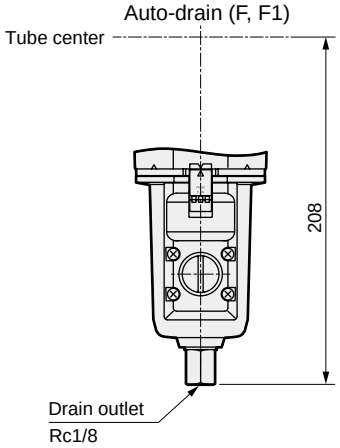

● FM8000-W

· Dimensions of options
With differential pressure detection port (Q)

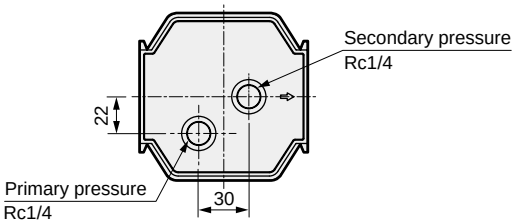

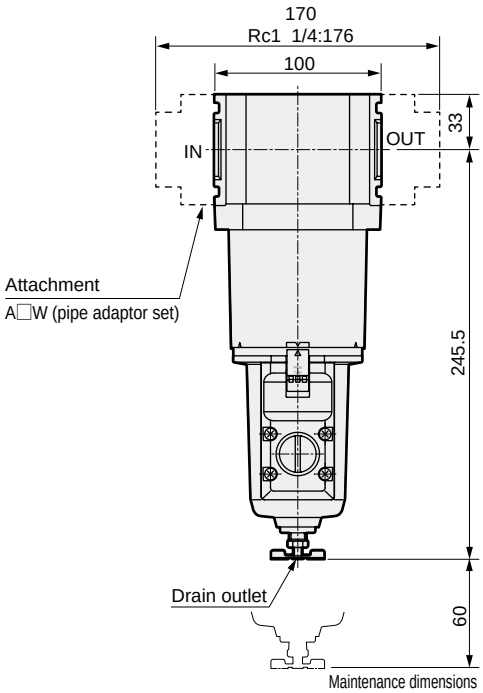

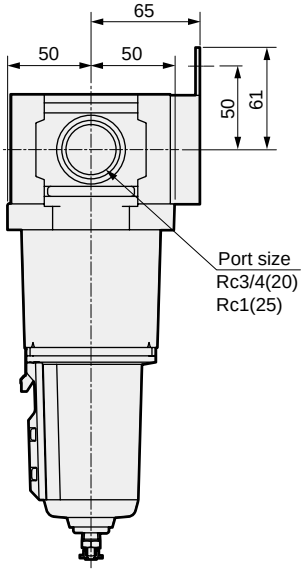

· Attachment
C type bracket (-BW)
Part model No.: B820
· Material: Steel
Zinc plated

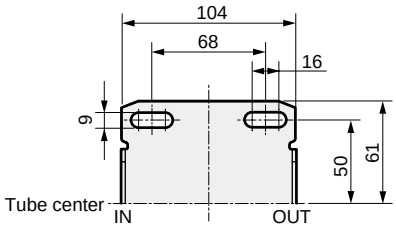

· Optional dimensions
Auto-drain (F, F1)

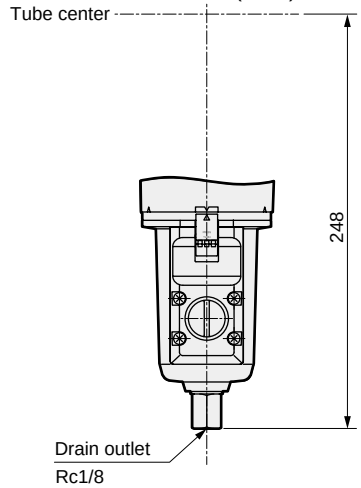

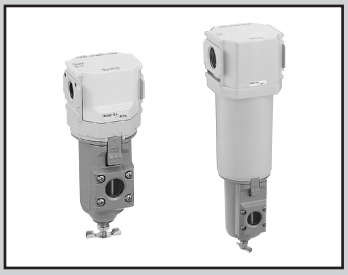

Oil mist filter/medium pressure

MM3000-W/MM4000-W/MM6000-W/MM8000-W Series

M3000 to 8000 Series medium pressure specifications

● Port size: 1/4 to 1

JIS symbol 

RoHS

Specifications

Model No.		MM3000-W	MM4000-W	MM6000-W	MM8000-W
Appearance					
Working fluid		Compressed air			
Max. working pressure	MPa	0.1 (≈15 psi, 1 bar) to 1.6 (≈230 psi, 16 bar) *2			
Proof pressure	MPa	2.4 (≈350 psi, 24 bar) *2			
Drain capacity	cm^3	45	80	80	80
Port size	Rc,NPT,G	1/4,3/8	1/4,3/8,1/2	3/4,1	3/4,1
Weight	kg	0.35	0.55	1.0	1.48

Mantle option name		Blank (M type)	S (S type)	X (X type)
Flow rate *1	MM3000-□-W	490	610	610
ℓ/min. (ANR)	MM4000-□-W	1130	1370	1370
Primary pressure	MM6000-□-W	1740	1920	1920
1.4 MPa	MM8000-□-W	3560	3980	3980
Ambient temperature	°C	-5 (23°F) to 60 (140°F) (no freezing) *2		-5 (23°F) to 30 (86°F) (no freezing)
Fluid temperature	°C	5 (41°F) to 60 (140°F) *2		5 (41°F) to 30 (86°F)
Filtration rating	μm	0.01 (nominal)	0.3	Suction by activated charcoal
Secondary side oil concentration	mg/m^3	0.01 or less (0.1 or less after oil saturation) *3, *4	0.5 or less *3	0.003 or less *3, *5
Mantle (element) change		1 year (6000 hours) or pressure drop 0.1 MPa (≈14.6 psi, 1 bar)		- *6

*1: Use within the max. processing flow rate.
If the max. processing flow rate is exceeded temporarily, or if the filter is installed at a location with high levels of pulsation, the mantle could be damaged or oil or drainage, etc., could splatter to the secondary side and result in a terminal malfunction.

*2: In the case of "F1" with auto-drain, the min. working pressure of auto-drain is 0.15 MPa. The max. working pressure is 1.5 MPa, the proof pressure is 2.25 MPa, the ambient temperature is -5 to 45°C, and the fluid temperature is 5 to 45°C.

*3: When primary side oil concentration is 30 mg/m^3, and inlet air temperature is 21°C.

*4: Install an oil mist filter (S type) as a pre-filter on the primary side to prevent early clogging.

*5: When an oil mist filter (M Series M type) is installed on the primary side.

*6: The time to replace the "X" type mantle (element) cannot be clearly stated since it depends on the odor density in the compressed air.
Consider the total period from the initial installation to when the smell of oil can be confirmed as the effective deodorizing period, and regularly replace the mantle (element).
Keep the primary air temperature at 30°C or less. The deodorizing effect will drop if temperature is high, so provide heat dissipation measures.

Option weight

* Add to the weight of the standard accessories.

Unit: kg

Code	Drain discharge	Attachment						Bracket
	F1	A8*W	A10*W	A15*W	A20*W	A25*W	A32*W	BW
MM3000	0.02	0.16	0.16	0.16				0.17
MM4000	0.02	0.16	0.16	0.16	0.16			0.21
MM6000	0.02				0.53	0.53	0.53	0.34
MM8000	0.02				0.53	0.53	0.53	0.36

How to order

MM3000 - 8 ○ - W - F1 - ○ - A8W ○

Ⓐ Model No. (White type) Ⓑ Port size Ⓒ Port thread Ⓓ Option Ⓔ Display unit Ⓕ Other attachments Ⓖ Bracket (included)

* Refer to page 30 for the explanation of the option.

Code	Description	Ⓐ Model No. MM3000	MM4000	MM6000	MM8000
Ⓑ Port size					
8	1/4	●	●		
10	3/8	●	●		
15	1/2		●		
20	3/4			●	●
25	1			●	●
Ⓒ Port thread					*1
Blank	Rc thread	●	●	●	●
N	NPT thread	●	●	●	●
G	G thread	●	●	●	●
Ⓓ Option					*2
Drain discharge *3, *4	**Blank** With manual drain cock	●	●	●	●
	F1 NC auto-drain (no press→no exhaust) drain outlet Rc1/8 Max. working press 1.5 MPa, max. operating amb temp 45°C	●	●	●	●
Bowl material	**Blank** Metal bowl	●	●	●	●
Element	**Blank** M type (nominal 0.01 μm; remaining oil 0.01 mg/m^3)	●	●	●	●
	S S type (nominal 0.3 μm; remaining oil 0.5 mg/m^3)	●	●	●	●
	X X type (deodorization; remaining oil 0.003 mg/m^3) *5	●	●	●	●
Diff press detect	**Blank** Without differential pressure detection port	●	●	●	●
	Q With differential pressure detection port (Rc1/4)			●	●
Flow direction	**Blank** Standard flow (left → right)	●	●	●	●
	X1 Reverse flow (right → left)	●	●	●	●
Ⓔ Display unit					
Blank	MPa display (Rc thread), psi display (NPT thread), bar display (G thread)	●	●	●	●
J1	MPa display (NPT, G thread)	●	●	●	●
Ⓕ Other attachments					*6, *7 Page 350
Blank	Not included	●	●	●	●
A8*W	1/4 pipe adaptor set	●	●		
A10*W	3/8 pipe adaptor set	●	●		
A15*W	1/2 pipe adaptor set	●	●		
A20*W	3/4 pipe adaptor set		●	●	●
A25*W	1 pipe adaptor set			●	●
A32*W	1 1/4 pipe adaptor set			●	●
*** Adaptor thread**					
Blank	Rc thread	●	●	●	●
N	NPT thread	●	●	●	●
G	G thread	●	●	●	●
Ⓖ Bracket (included)					Page 346
Blank	Not included	●	●	●	●
BW	C type bracket	●	●	●	●

⚠ Precautions for model No. selection

*1: NPT and G threads are available for IN, OUT, and drain ports.
*2: Select options for the drainage, bowl material, element and differential pressure detection. When selecting options for several items, list options in order from the top.
*3: NO auto-drain cannot be selected.
*4: Refer to page 354 for the auto-drain usage conditions.
*5: Combination with option F1 is not possible.
*6: The pipe adaptor set and C type bracket cannot be used together.
*7: The joiner set is enclosed with the pipe adaptor set.

Flow characteristics (max. processing flow rate)

● MM*000-W

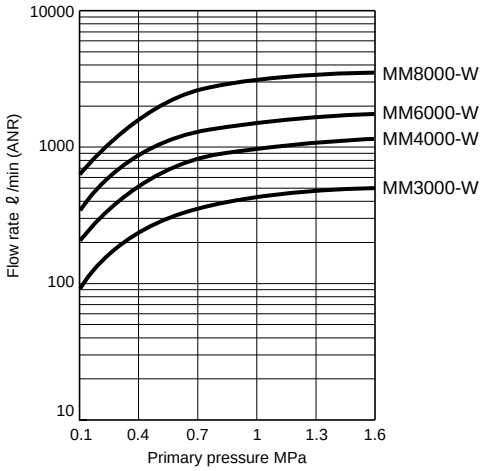

● MM*000-W-S

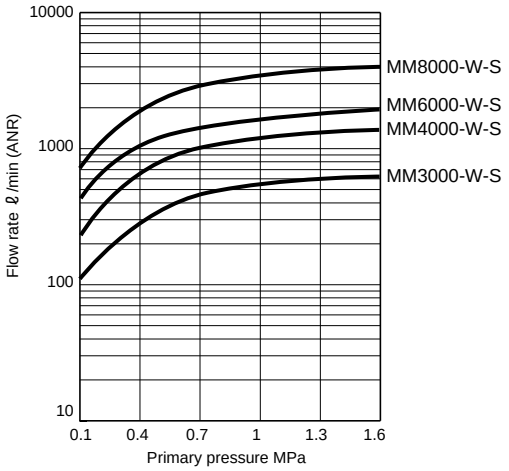

● MM*000-W-X

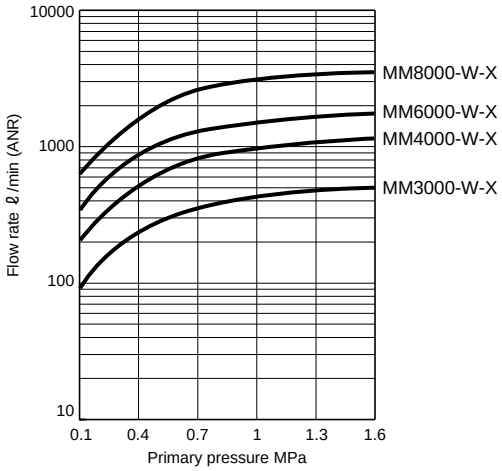

How to select oil mist filter and optional mantle

Major recommended circuit

◆ S type **F S**

◆ M type **F S M**

◆ X type **F S M X**

Applications

General industrial air
- Air tool
  - Air drill/air screw driver
  - Pneumatic grinder
- Labor-saving device
- Pneumatic jigs and tools
- Air chuck
- Air vice
- Precision part cleaning air blow

Oil-free air
- Instrumentation
- Measurement
- For sequence control
  - Movable element/pure fluid element
- Luxury painting
- Precision industry

Odorless air
- Food industry
- Pharmaceutical industry
- Mixing
- Transportation
- Drying
- Packaging
- Brewing air

Option code of mantle and shape

Option code	Appearance
Blank (M type)	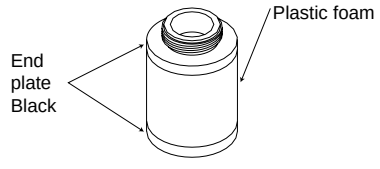
S (S type)	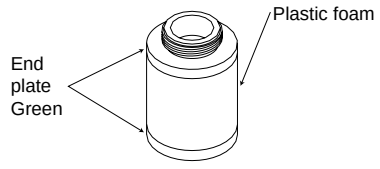
X (X type)	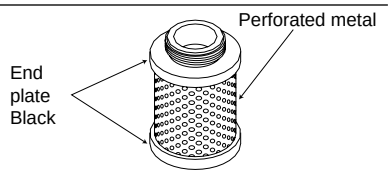

Note: Changes for product upgrades may be made without prior notice. When placing an order, confirm the option code of the part model No. displayed on the body.

Internal structure and parts list

● MM3000-W/MM4000-W

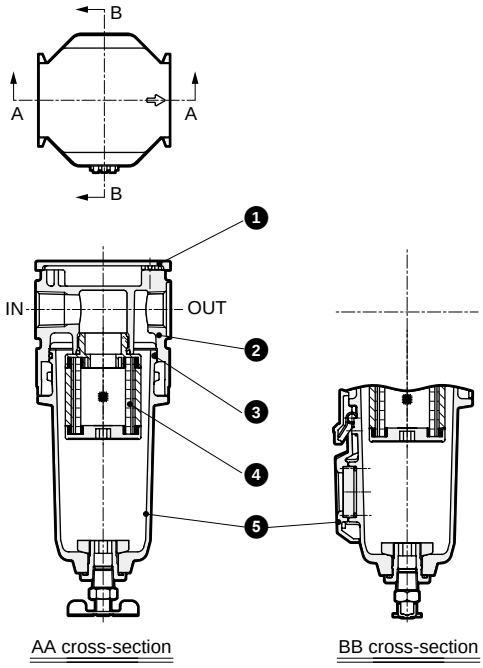

● MM6000-W

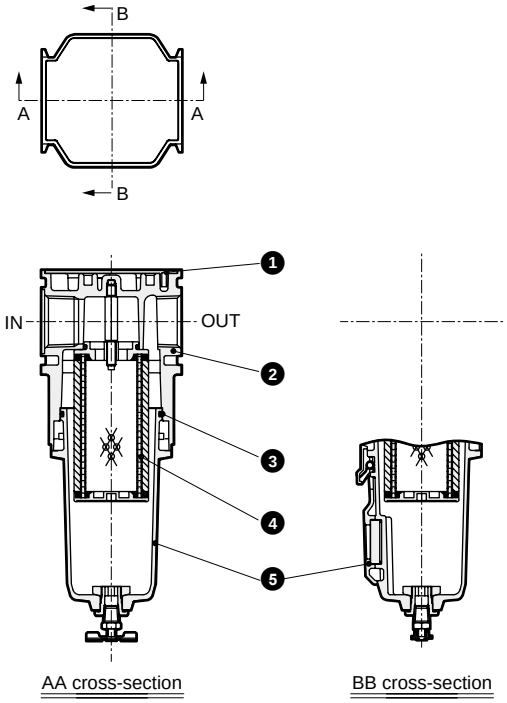

● MM8000-W

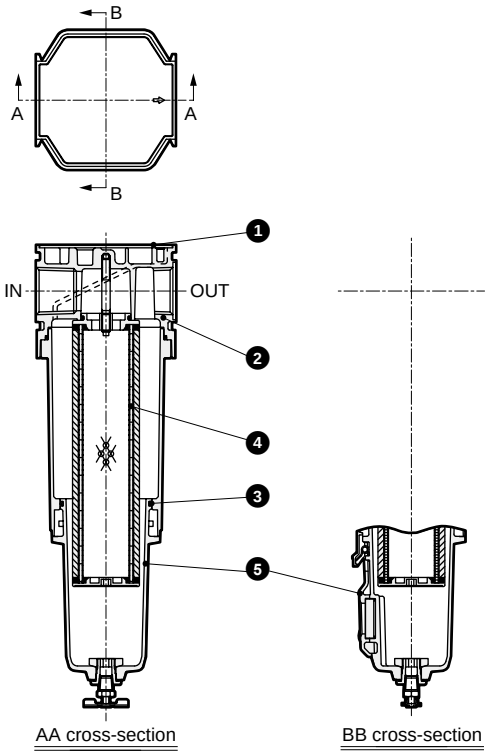

No.	Part name	Material
(1)	Plate cover	ABS resin
(2)	Body	Aluminum alloy die-casting
(3)	O-ring	Special nitrile rubber
(4)	Mantle assembly	-
(5)	Metal bowl assembly	Aluminum alloy die-casting, copper alloy, glass, nitrile rubber, steel, stainless steel

*1: Repair mantle and repair kit are common for M*000-W. Refer to repair parts on page 125.

Dimensions

● MM3000-W

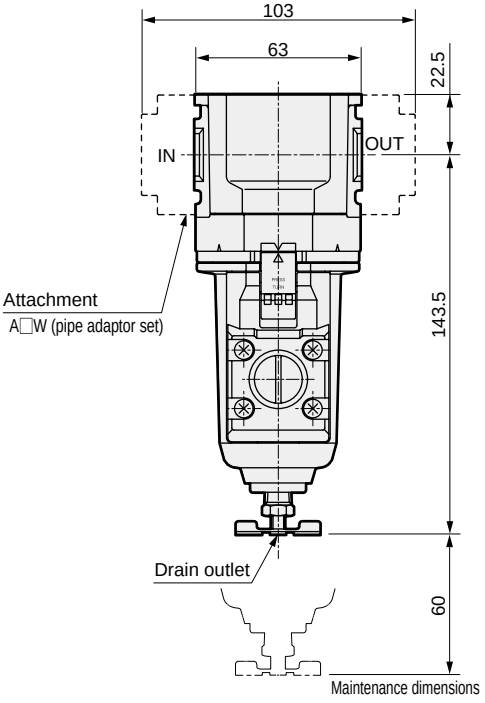

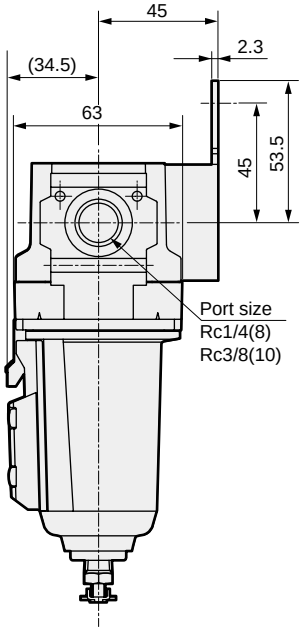

· Attachment
C type bracket (-BW)
Part model No.: B320
· Material: Steel
Zinc plated

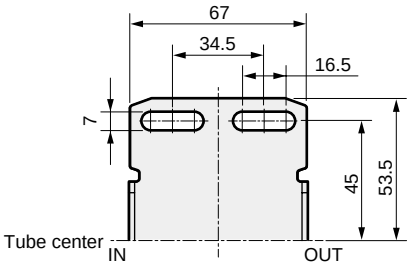

· Dimensions of options
Auto-drain (F1)

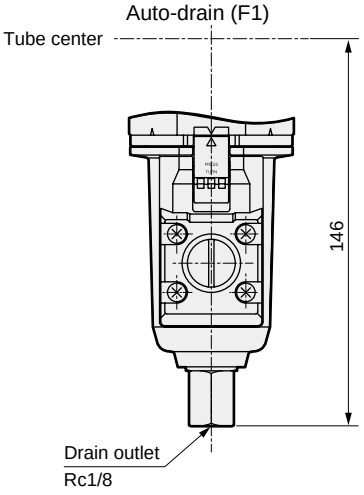

● MM4000-W

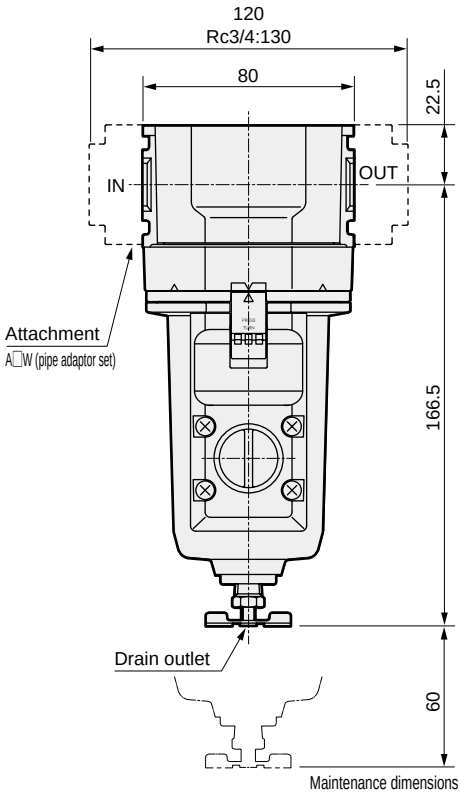

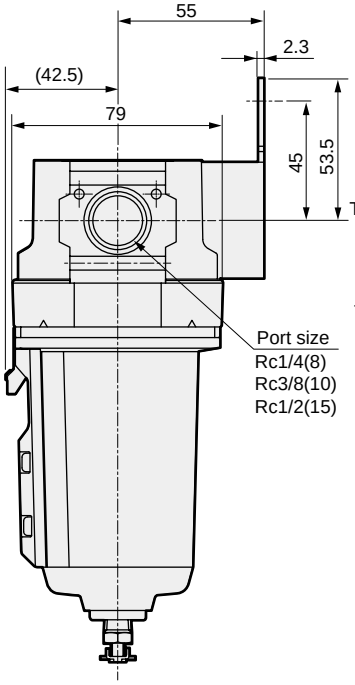

· Attachment
C type bracket (-BW)
Part model No.: B420
· Material: Steel
Zinc plated

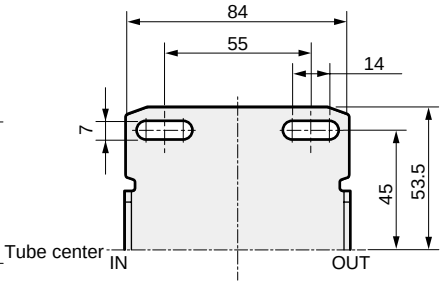

· Dimensions of options
Auto-drain (F1)

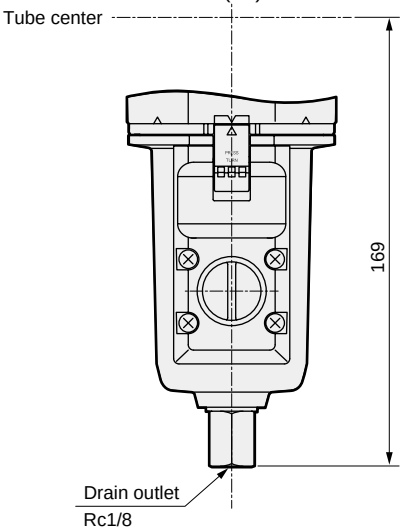

Dimensions

● MM6000-W

· Dimensions of options
With differential pressure detection port (Q)

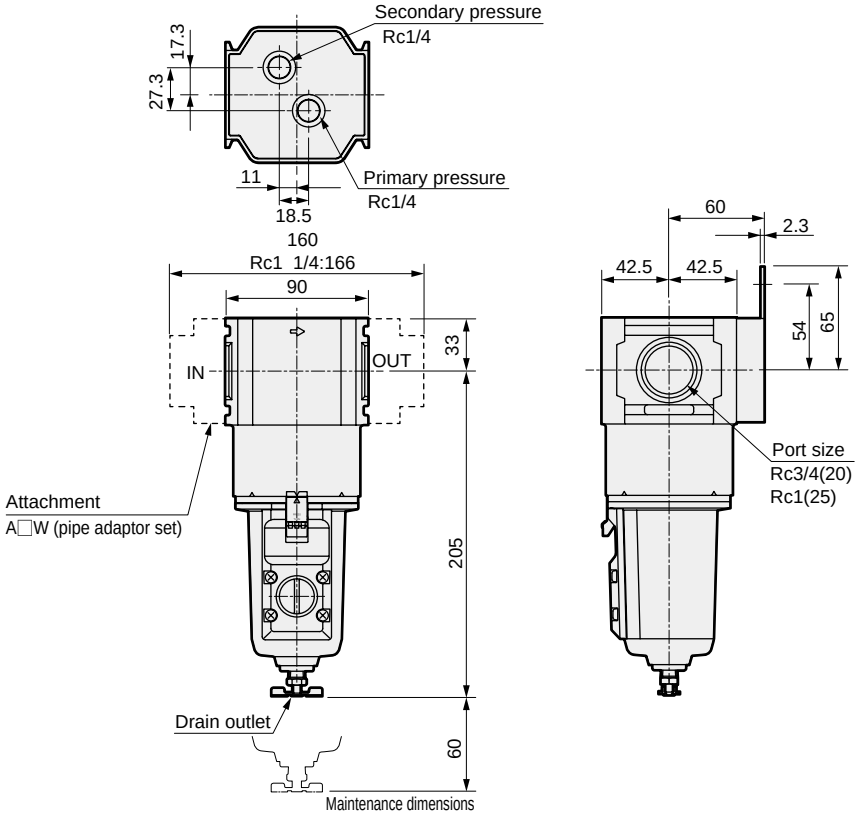

· Attachment
C type bracket (-BW)
Part model No.: B620
· Material: Steel
Zinc plated

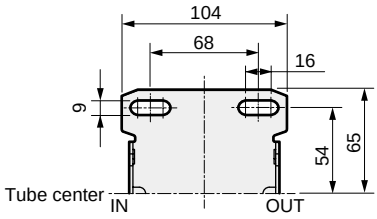

· Dimensions of options
Auto-drain (F1)

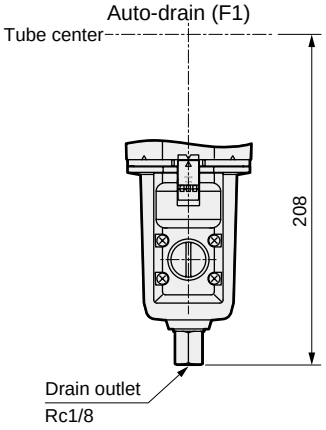

● MM8000-W

· Dimensions of options
With differential pressure detection port (Q)

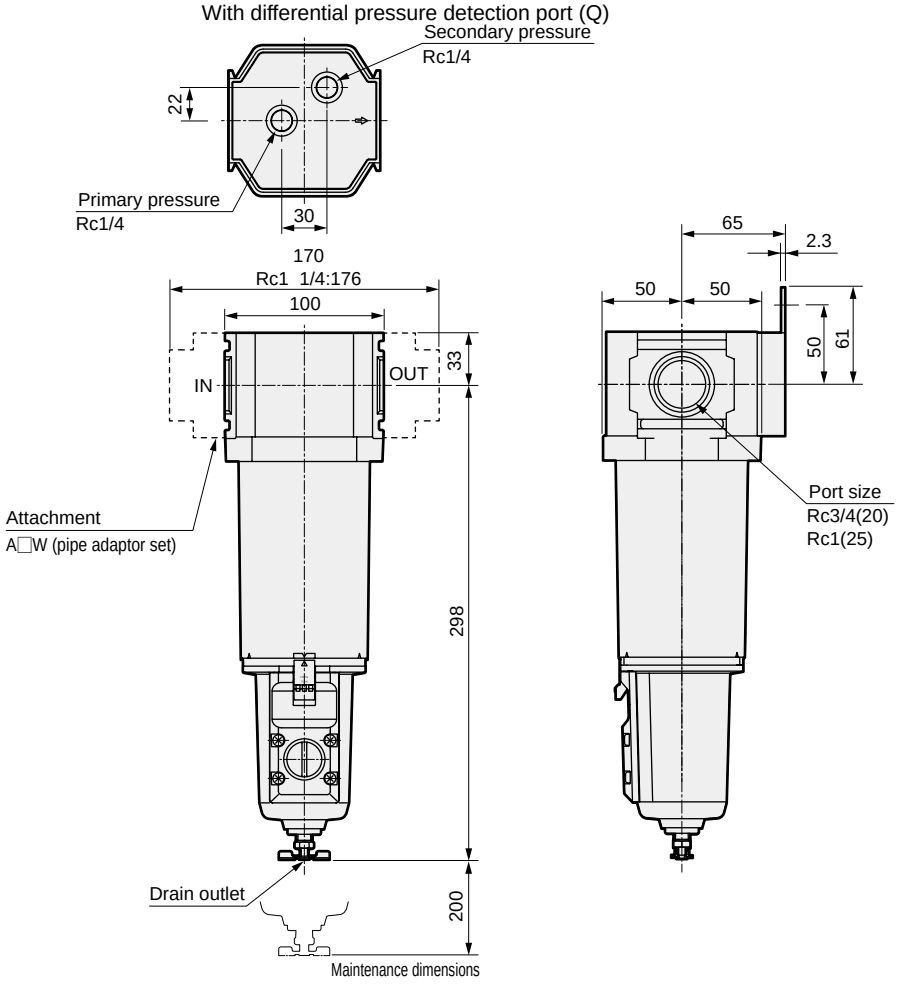

· Attachment
C type bracket (-BW)
Part model No.: B820
· Material: Steel
Zinc plated

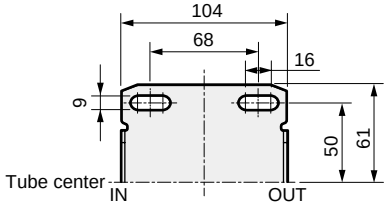

· Dimensions of options
Auto-drain (F1)

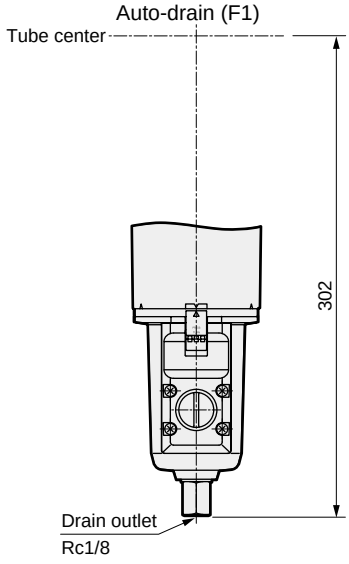



Regulator/medium pressure

RM3000-W/RM4000-W Series

R3000-W/R4000-W Series medium pressure specifications

● Port size: 1/4 to 1/2

JIS symbol 

RoHS CAD

Specifications

Item		RM3000-W	RM4000-W
Working fluid		Compressed air	
Max. working pressure	MPa	1.6 (≈230 psi, 16 bar)	
Proof pressure	MPa	2.4 (≈350 psi, 24 bar)	
Ambient temperature	°C	-5 (23°F) to 60 (140°F) (no freezing) *1	
Set pressure	MPa	0.05 (≈7.3 psi, 0.5 bar) to 0.85 (≈120 psi, 8.5 bar)	
Pressure relief		With relief mechanism	
Port size	Rc,NPT,G	1/4, 3/8 (1/2 uses an adaptor)	1/4, 3/8, 1/2 (3/4 uses an adaptor)
Weight	g	0.45	0.7
Standard accessories		Pressure gauge, nut for panel mount	

*1: The ambient temperature of the pressure switch with indicator PPR assembly “RN” or “RP” is 5 to 50°C .

Flow characteristics

● RM3000-10-W

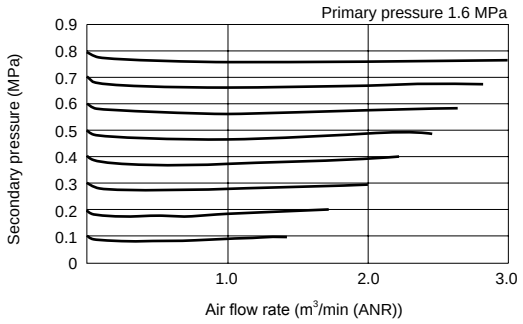

● RM4000-15-W

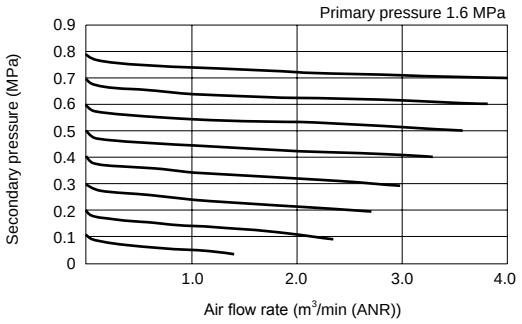

Pressure characteristics

● RM3000-W

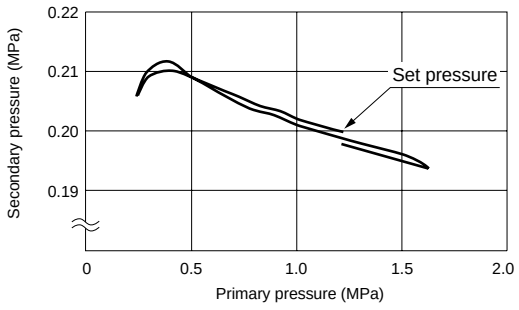

● RM4000-W

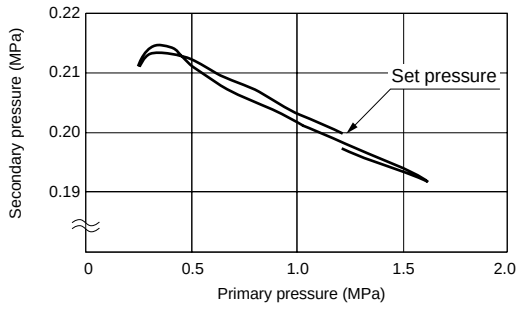

Option weight

* Add to the weight of the standard accessories.

Unit: kg

Code	Pressure gauge		Pipe adaptor set				Attachment					
	T*	RN/RP	A8*W	A10*W	A15*W	A20*W	BW	B3W	G45P	G49P	G59P	G40P
RM3000	0	0.04	0.16	0.16	0.16		0.17	0.07	0.074	0.086	0.115	0.085
RM4000	0	0.04	0.16	0.16	0.16	0.16	0.21	0.11	0.074	0.086	0.115	0.085

How to order

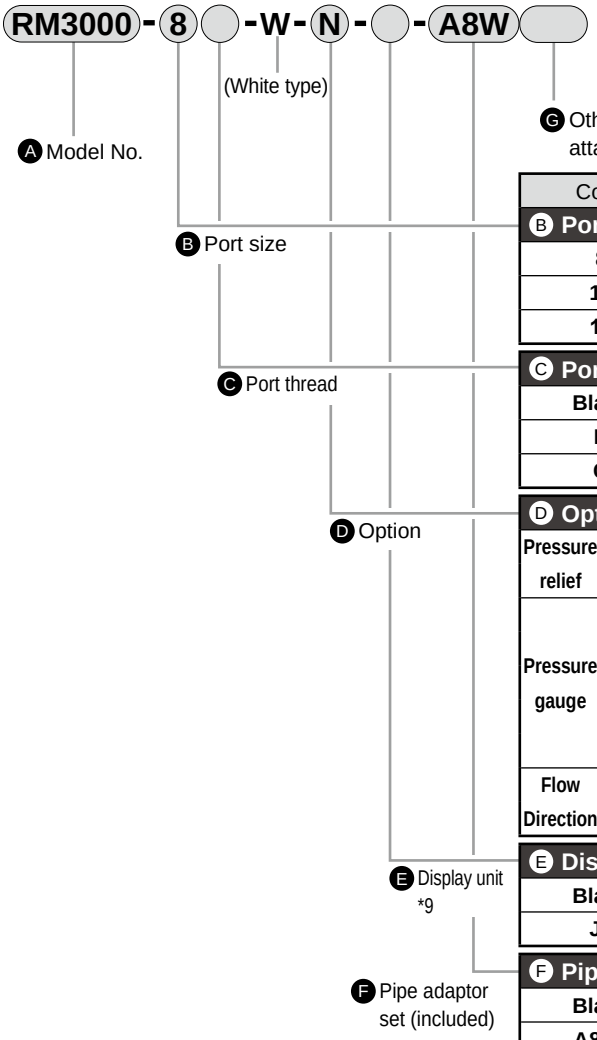

* Refer to page 30 for the explanation of the option.

Code	Description	A Mod No. RM3000	A Mod No. RM4000
B Port size			
8	1/4	●	●
10	3/8	●	●
15	1/2		●
C Port thread			*1
Blank	Rc thread	●	●
N	NPT thread	●	●
G	G thread	●	●
D Option			*2
Pressure relief **Blank**	With relief mechanism	●	●
N	Non-relief	●	●
Pressure gauge **Blank**	With standard pressure gauge (G401)	●	●
T *3	No pressure gauge (gauge port 1/4 is assembled sealed)	●	●
T8	Pressure gauge ready (gauge port 1/4 is left open)	●	●
RN	Pressure switch with display PPR mounted (NPN output 1 point)	●	●
RP	Pressure switch with display PPR mounted (PNP output 1 point)	●	●
Flow Direction **Blank**	Standard flow (left → right)	●	●
X1	Reverse flow (right → left)	●	●
E Display unit			
Blank	MPa display (Rc thread), psi display (NPT thread), bar display (G thread)	●	●
J1	MPa display (NPT, G thread)	●	●
F Pipe adaptor set (included)			*4, *5 Page 350
Blank	Not included	●	●
A8*W	1/4 pipe adaptor set	●	●
A10*W	3/8 pipe adaptor set	●	●
A15*W	1/2 pipe adaptor set	●	●
A20*W	3/4 pipe adaptor set		●
*** Adaptor thread**			
Blank	Rc thread	●	●
N	NPT thread	●	●
G	G thread	●	●
G Other attachments			*6, *7 Pages 346, 363
Blank	Not included	●	●
BW	C type bracket	●	●
B3W	L type bracket *8	●	●
G45P	Pressure gauge: G45D-8-P10	●	●
G49P	Pressure gauge: G49D-8-P10	●	●
G59P	Pressure gauge: G59D-8-P10	●	●
G40P	Pressure gauge: G40D-8-P10	●	●

⚠ Precautions for model No. selection

*1 : G and NPT threads are available for IN, OUT and gauge ports.
*2 : When selecting options for several items, list options in order from the top.
*3 : For "T", a gauge plug is assembled instead of a pressure gauge.
*4 : The joiner set is enclosed with the pipe adaptor set.
*5 : The pipe adaptor set A*00-**-W (refer to page 350 for related products) is enclosed.
*6 : Refer to the related products for details on the attachments.
The pipe adaptor set and C type bracket cannot be used together.
*7 : If NPT is selected for C Port thread, an NPT pressure gauge is supplied. If Rc or G thread is selected, an R thread pressure gauge is supplied.
*8 : Refer to Safety precautions for the F.R.L. unit for details on mounting the L type bracket.
*9 : Display unit options when selecting NPT threads: If Blank is selected, the pressure unit is psi and the temperature display unit is °F.
When G thread and Blank display unit option are selected, the pressure unit will be bar and the temperature display unit will be °C.
When NPT/G thread and "J1" display unit option are selected, the pressure unit will be MPa and the temperature display unit will be °C.

- The internal structure and parts list are common with R*-000-W. Refer to page 139.
- Refer to page 151 for optional parts drawings.

Dimensions CAD

● RM3000-W

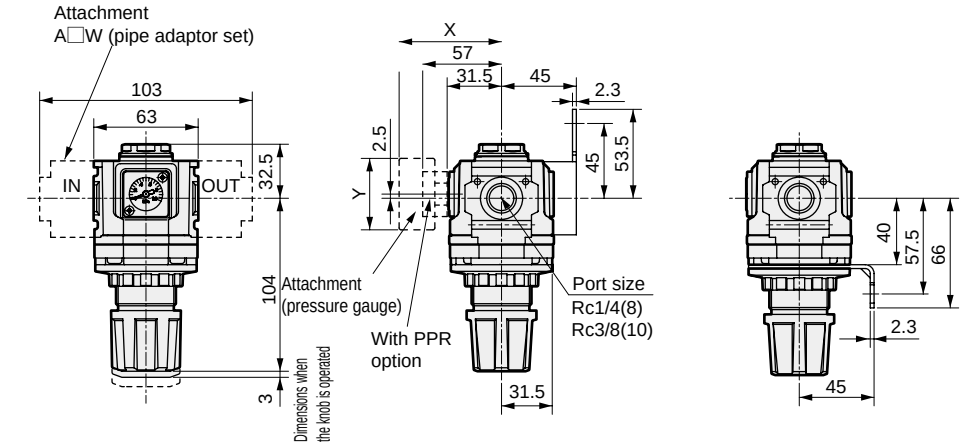

Panel cut dimension

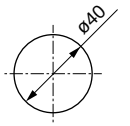

Panel plate thickness: max. 7 mm

· Attachment (C type bracket)
C type bracket (-BW)
Part model No.: B320
· Material: Steel
Zinc plated

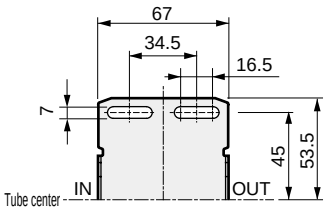

L type bracket (-B3W)
Part model No.: B330
· Material: Steel
Zinc plated

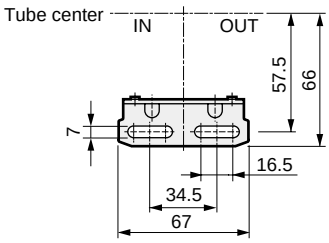

Pressure gauge attached optional dimensions table

Pressure gauge	X	Y
G45P	(70)	ø39
G49P	(69.5)	ø43.5
G59P	(72)	ø52
G40P	(71.5)	ø42.5

● RM4000-W

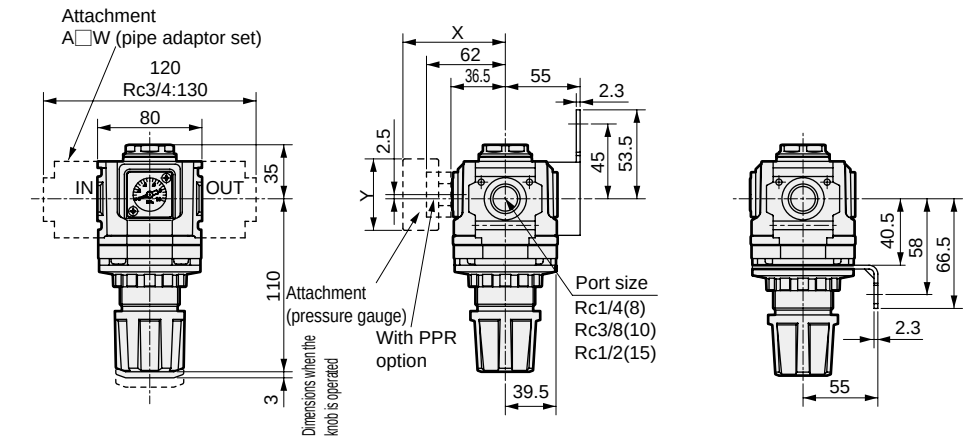

Panel cut dimension

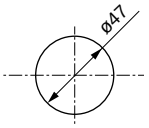

Panel plate thickness: max. 7 mm

· Attachment
C type bracket (-BW)
Part model No.: B420
· Material: Steel
Zinc plated

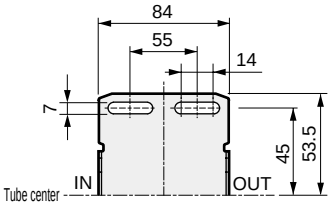

L type bracket (-B3W)
Part model No.: B430
· Material: Steel
Zinc plated

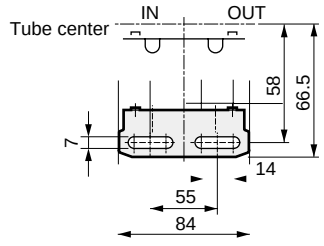

Pressure gauge attached optional dimensions table

Pressure gauge	X	Y
G45P	(75)	ø39
G49P	(74.5)	ø43.5
G59P	(77)	ø52
G40P	(76.5)	ø42.5

Modular design
F.R.L.

Copper and PTFE free Series

■ **Refining and pressure adjusting components/F.R.L. unit**

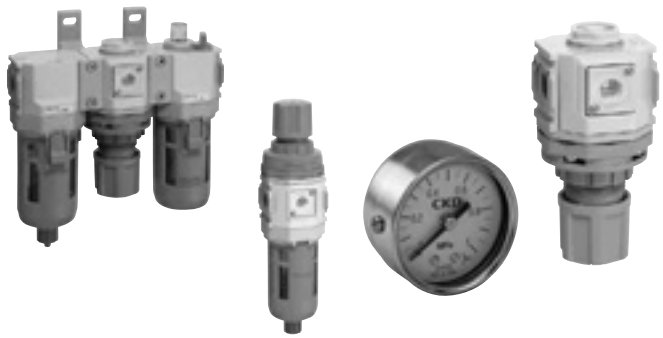

CONTENTS

Product introduction 24
Series variation 4 to 19

Combination

● F.R.L. combination (C*000-W-P6) 312

Filter/regulator

● Filter/regulator (W*000-W-P6) 313
● Reverse filter/regulator (W*100-W-P6) 314

Air filter

● Air filter (F*000-W) 315
● Oil mist filter (M*000-W) 316

Regulator

● Regulator (R*000-W-P6) 317
● Reverse regulator (R*100-W-P6) 318

Lubricator

● Lubricator (L*000-W) 319

Pressure gauge (G49D-P6/G59D-P6) 320
Bracket/joiner (B-W/J-W) 346
Distributor (D*01-00-W) 348
Pipe adaptor (A***-W) 350
⚠Safety precautions 354

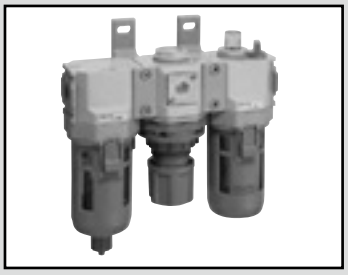

F.R.L. combination: copper and PTFE-free

C1000/C2500/C3000 C4000/C6500/C8000-W-P6 Series

Copper ion prevention treatment

● Port size: 1/8 to 1

JIS symbol 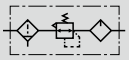

RoHS CAD

How to order

* Refer to page 30 for the explanation of the option.

C1000 - 6 ○ - W - CT P6 - ○ A6W VW

- A Model No.
- B Port size
- C Port thread
- D Option
- E Display unit
- F Pipe adaptor set (included)
- G Residual pressure exhaust valve (included)

(White type)

Copper and PTFE free specifications

Code		Description	A Model No. C1000	C2500	C3000	C4000	C6500	C8000
B Port size								
6		1/8	●					
8		1/4	●	●	●	●		
10		3/8		●	●	●		
15		1/2				●		
20		3/4					●	●
25		1					●	●
C Port thread								*2
Blank		Rc thread	●	●	●	●	●	●
N		NPT thread	●	●	●	●	●	●
G		G thread	●	●	●	●	●	●
D Option								*3
Drain discharge	**Blank**	Filter with manual drain cock, lubricator without manual cock	●	●	●	●	●	●
	C	Lubricator with manual cock	●	●	●	●	●	●
Bowl material	**Blank**	Polycarbonate bowl	●	●	●	●	●	●
	Z	Nylon bowl	●	●	●	●	●	●
Element	**Blank**	5 µm	●	●	●	●	●	●
	Y	0.3 µm (submicron)		●	●	●	●	●
Diff press detect	**Blank**	Without differential pressure detection port	●	●	●	●	●	●
	Q	With differential pressure detection port (Rc 1/4)					●	●
Pressure range	**Blank**	0.05 to 0.85 MPa	●	●	●	●	●	●
	L	0.05 to 0.35 MPa	●	●	●	●	●	●
Pressure relief	**Blank**	With relief mechanism	●	●	●	●	●	●
	N	Non-relief	●	●	●	●	●	●
Pressure gauge	**T**	No pressure gauge (gauge port (1/4) is assembled sealed)	●	●	●	●	●	●
	T6	Pressure gauge ready (gauge port (Rc 1/8) is left open) *6	●	●	●	●	●	●
	T8	Pressure gauge ready (gauge port (1/4) is left open) *6	●	●	●	●	●	●
Flow direction	**Blank**	Standard flow (left → right)	●	●	●	●	●	●
	X1	Reverse flow (right → left)	●	●	●	●	●	●
E Display unit								
Blank		MPa display (Rc thread), psi display (NPT thread), bar display (G thread)	●	●	●	●	●	●
J1		MPa display (NPT, G thread)	●	●	●	●	●	●
F Pipe adaptor set (included)								*4 Page 350
Blank		Not included	●	●	●	●	●	●
A6*W		1/8 pipe adaptor set	●					
A8*W		1/4 pipe adaptor set	●	●	●	●		
A10*W		3/8 pipe adaptor set	●	●	●	●		
A15*W		1/2 pipe adaptor set		●	●	●		
A20*W		3/4 pipe adaptor set				●	●	●
A25*W		1 pipe adaptor set					●	●
A32*W		1 1/4 pipe adaptor set					●	●
*** Adaptor thread**								
Blank		Rc thread	●	●	●	●	●	●
N		NPT thread	●	●	●	●	●	●
G		G thread	●	●	●	●	●	●
G Residual pressure exhaust valve (included)								Page 182
Blank		Not included	●	●	●	●	●	●
VW		Residual pressure exhaust valve (V3000-W) + joiner set		●	●	●		

⚠ Precautions for model No. selection

*1 : Refer to pages 34 to 41 for specifications, dimensions and flow characteristics.

*2 : G and NPT threads are available for IN, OUT, gauge port and drain outlet, including the attachment V.

*3 : Select options for the drainage, bowl material, element, differential pressure detection and regulator. When selecting options for several items, list options in order from the top.
Select one of the regulator options.

*4 : The joiner set is enclosed with the pipe adaptor set.

*5 : Combinations other than those above are used as customized combinations (page 82).

*6 : The pressure gauge must be prepared separately.
T6:G49D-6-P10-P6(L:G49D-6-P04-P6)
T8:G59D-8-P10-P6(L:G59D-8-P04-P6)



Filter and regulator: copper and PTFE-free

W1000/W3000 W4000/W8000 -W-P6 Series

Copper ion prevention treatment

● Port size: 1/8 to 1

JIS symbol 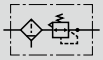

RoHS CAD

How to order

W1000 - 6 ( ) - W - ZT P6 - ( ) A6W ( )

* Refer to page 30 for the explanation of the option.

- W1000: Ⓐ Model No.
- 6: Ⓑ Port size
- ( ): Ⓒ Port thread
- W: (White type)
- ZT: Ⓓ Option
- P6: Copper and PTFE free specifications
- ( ): Ⓔ Display unit
- A6W: Ⓕ Pipe adaptor set (included)
- ( ): Ⓖ Bracket (included)

Code		Description	W1000	W3000	W4000	W8000
Ⓑ Port size						
6		1/8	●			
8		1/4	●	●	●	
10		3/8		●	●	
15		1/2			●	
20		3/4				●
25		1				●
Ⓒ Port thread						*2
Blank		Rc thread	●	●	●	●
N		NPT thread	●	●	●	●
G		G thread	●	●	●	●
Ⓓ Option						*3
Drain discharge	Blank	Manual drain cock	●	●	●	●
Bowl material	Blank	Polycarbonate bowl	●	●	●	●
	Z	Nylon bowl	●	●	●	●
Element	Blank	5 µm	●	●	●	●
	Y	0.3 µm (submicron)		●	●	●
Pressure range	Blank	0.05 to 0.85 MPa	●	●	●	●
	L	0.05 to 0.35 MPa	●	●	●	●
Pressure relief	Blank	With relief mechanism	●	●	●	●
	N	Non-relief	●	●	●	●
Pressure gauge	T	No pressure gauge (gauge port (1/4) is assembled sealed)	●	●	●	●
	T6	Pressure gauge ready (gauge port (Rc 1/8) is left open) *6	●	●	●	●
	T8	Pressure gauge ready (gauge port (1/4) is left open) *6	●	●	●	●
Flow direction	Blank	Standard flow (left → right)	●	●	●	●
	X1	Reverse flow (right → left)	●	●	●	●
Ⓔ Display unit						
Blank		MPa display (Rc thread), psi display (NPT thread), bar display (G thread)	●	●	●	●
J1		MPa display (NPT, G thread)	●	●	●	●
Ⓕ Pipe adaptor set (included)						*4, *5 Page 350
Blank		Not included	●	●	●	●
A6*W		1/8 pipe adaptor set	●			
A8*W		1/4 pipe adaptor set	●	●	●	
A10*W		3/8 pipe adaptor set	●	●	●	
A15*W		1/2 pipe adaptor set		●	●	
A20*W		3/4 pipe adaptor set			●	●
A25*W		1 pipe adaptor set				●
A32*W		1 1/4 pipe adaptor set				●
*** Adaptor thread**						
Blank		Rc thread	●	●	●	●
N		NPT thread	●	●	●	●
G		G thread	●	●	●	●
Ⓖ Bracket (included)						Page 346
Blank		Not included	●	●	●	●
BW		C type bracket	●	●	●	●
B3W		L type bracket	●	●	●	

⚠ Precautions for model No. selection

*1 : Refer to pages 90 to 96 for specifications, dimensions and flow characteristics.
*2 : G and NPT threads are available for IN, OUT, gauge port and drain outlet.
*3 : Select options for the drainage, bowl material, element, and regulator. When selecting options for several items, list options in order from the top.
Select one of the regulator options.
*4 : The pipe adaptor set and C type bracket cannot be used together.
*5 : The joiner set is enclosed with the pipe adaptor set.
*6 : The pressure gauge must be prepared separately.
T6:G49D-6-P10-P6(L:G49D-6-P04-P6)
T8:G59D-8-P10-P6(L:G59D-8-P04-P6)



Reverse filter and regulator: copper and PTFE-free

W1100/W3100 W4100/W8100-W-P6 Series

Copper ion prevention treatment

● Port size: 1/8 to 1

JIS symbol 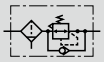

RoHS CAD

How to order

* Refer to page 30 for the explanation of the option.

W1100 - 6 ( ) - W - ZT P6 - ( ) - A6W ( )

- W1100: Ⓐ Model No.
- 6 / ( ): Ⓑ Port size
- ( ): Ⓒ Port thread
- W: (White type)
- ZT P6: Copper and PTFE free specifications
- ( ): Ⓓ Option
- ( ): Ⓔ Display unit
- A6W: Ⓕ Pipe adaptor set (included)
- ( ): Ⓖ Bracket (included)

Code	Description	Ⓐ Model No. W1100	W3100	W4100	W8100
Ⓑ Port size					
6	1/8	●			
8	1/4	●	●	●	
10	3/8		●	●	
15	1/2			●	
20	3/4				●
25	1				●
Ⓒ Port thread					*2
Blank	Rc thread	●	●	●	●
N	NPT thread	●	●	●	●
G	G thread	●	●	●	●
Ⓓ Option					*3, *4
Drain discharge **Blank**	Manual drain cock	●	●	●	●
Bowl material **Blank**	Polycarbonate bowl	●	●	●	●
Bowl material **Z**	Nylon bowl	●	●	●	●
Element **Blank**	5 µm	●	●	●	●
Element **Y**	0.3 µm (submicron)		●	●	●
Pressure range **Blank**	0.05 to 0.85 MPa	●	●	●	●
Pressure range **L**	0.05 to 0.35 MPa	●	●	●	●
Pressure relief **Blank**	With relief mechanism	●	●	●	●
Pressure relief **N**	Non-relief	●	●	●	●
Pressure gauge **T**	No pressure gauge (gauge port (1/4) is assembled sealed)	●	●	●	●
Pressure gauge **T6**	Pressure gauge ready (gauge port (Rc 1/8) is left open) *7	●	●	●	●
Pressure gauge **T8**	Pressure gauge ready (gauge port (1/4) is left open) *7	●	●	●	●
Flow direction **Blank**	Standard flow (left → right)	●	●	●	●
Flow direction **X1**	Reverse flow (right → left)	●	●	●	●
Ⓔ Display unit					
Blank	MPa display (Rc thread), psi display (NPT thread), bar display (G thread)	●	●	●	●
J1	MPa display (NPT, G thread)	●	●	●	●
Ⓕ Pipe adaptor set (included)					*5, *6 Page 350
Blank	Not included	●	●	●	●
A6*W	1/8 pipe adaptor set	●			
A8*W	1/4 pipe adaptor set	●	●	●	
A10*W	3/8 pipe adaptor set	●	●	●	
A15*W	1/2 pipe adaptor set		●	●	
A20*W	3/4 pipe adaptor set			●	●
A25*W	1 pipe adaptor set				●
A32*W	1 1/4 pipe adaptor set				●
*** Adaptor thread**					
Blank	Rc thread	●	●	●	●
N	NPT thread	●	●	●	●
G	G thread	●	●	●	●
Ⓖ Bracket (included)					Page 346
Blank	Not included	●	●	●	●
BW	C type bracket	●	●	●	●
B3W	L type bracket	●	●	●	

⚠ Precautions for model No. selection

*1 : Refer to pages 98 to 105 for specifications, dimensions and flow characteristics.
*2 : G and NPT threads are available for IN, OUT, gauge port and drain outlet.
*3 : Select options for the drainage, bowl material, element, and regulator. When selecting options for several items, list options in order from the top.
Select one of the regulator options.
*4 : Positions of check valve and pressure gauge cannot be changed. If the IN and OUT directions must be reversed, indicate “X1” at the end of the option field.
*5 : The pipe adaptor set and C type bracket cannot be used together.
*6 : The joiner set is enclosed with the pipe adaptor set.
*7 : The pressure gauge must be prepared separately.
T6:G49D-6-P10-P6(L:G49D-6-P04-P6)
T8:G59D-8-P10-P6(L:G59D-8-P04-P6)



Air filter: copper and PTFE-free

F1000/F3000 F4000/F6000/F8000-W Series

Copper ion prevention treatment　　Copper and PTFE-free as standard.

● Port size: 1/8 to 1

JIS symbol

RoHS　CAD

How to order

F1000 - 6 ○ - W - Z - ○ - A6W ○

- F1000: Ⓐ Model No.
- 6 ○: Ⓑ Port size
- W: (White type)
- Z: Ⓓ Option
- ○: Ⓔ Display unit
- A6W: Ⓕ Pipe adaptor set (included)
- ○: Ⓖ Bracket (included)

* Refer to page 30 for the explanation of the option.

Code	Description	Ⓐ Model No. F1000	F3000	F4000	F6000	F8000
Ⓑ Port size						
6	1/8	●				
8	1/4	●	●	●		
10	3/8		●	●		
15	1/2			●		
20	3/4				●	●
25	1				●	●
Ⓒ Port thread						*2
Blank	Rc thread	●	●	●	●	●
N	NPT thread	●	●	●	●	●
G	G thread	●	●	●	●	●
Ⓓ Option						*3
Drain discharge **Blank**	Manual drain cock	●	●	●	●	●
Bowl material **Blank**	Polycarbonate bowl	●	●	●	●	●
Bowl material **Z**	Nylon bowl	●	●	●	●	●
Element **Blank**	5 µm	●	●	●	●	●
Element **Y**	0.3 µm (submicron)		●	●	●	●
Diff press detect **Blank**	Without differential pressure detection port	●	●	●	●	●
Diff press detect **Q**	With differential pressure detection port (Rc 1/4)				●	●
Flow direction **Blank**	Standard flow (left → right)	●	●	●	●	●
Flow direction **X1**	Reverse flow (right → left)	●	●	●	●	●
Ⓔ Display unit						
Blank	MPa display (Rc thread), psi display (NPT thread), bar display (G thread)	●	●	●	●	●
J1	MPa display (NPT, G thread)	●	●	●	●	●
Ⓕ Pipe adaptor set (included)						*4, *5 Page 350
Blank	Not included	●	●	●	●	●
A6*W	1/8 pipe adaptor set	●				
A8*W	1/4 pipe adaptor set	●	●	●		
A10*W	3/8 pipe adaptor set	●	●	●		
A15*W	1/2 pipe adaptor set		●	●		
A20*W	3/4 pipe adaptor set			●	●	●
A25*W	1 pipe adaptor set				●	●
A32*W	1 1/4 pipe adaptor set				●	●
*** Adaptor thread**						
Blank	Rc thread	●	●	●	●	●
N	NPT thread	●	●	●	●	●
G	G thread	●	●	●	●	●
Ⓖ Bracket (included)						Page 346
Blank	Not included	●	●	●	●	●
BW	C type bracket	●	●	●	●	●

⚠ Precautions for model No. selection

*1 : Refer to pages 106 to 113 for specifications, dimensions and flow characteristics.
*2 : G threads and NPT threads are available for IN, OUT and drain outlet (metal bowl with auto-drain).
*3 : Select options for the drainage, bowl material, and element. When selecting options for several items, list options in order from the top.
*4 : The pipe adaptor set and C type bracket cannot be used together.
*5 : The joiner set is enclosed with the pipe adaptor set.



Oil mist filter: copper and PTFE-free

M1000/M3000 M4000/M6000/M8000-W Series

Copper ion prevention treatment — Copper and PTFE-free as standard.

● Port size: 1/8 to 1

JIS symbol 

RoHS CAD

How to order

M1000 - 6 ○ - W - S - ○ - A6W ○

Ⓐ Model No. | (White type) | Ⓖ Bracket (included)

Ⓑ Port size | Ⓒ Port thread | Ⓓ Option | Ⓔ Display unit | Ⓕ Pipe adaptor set (included)

* Refer to page 30 for the explanation of the option.

Code		Description	Ⓐ Model No. M1000	M3000	M4000	M6000	M8000
Ⓑ Port size							
6		1/8	●				
8		1/4	●	●	●		
10		3/8		●	●		
15		1/2			●		
20		3/4				●	●
25		1				●	●
Ⓒ Port thread							*2
Blank		Rc thread	●	●	●	●	●
N		NPT thread	●	●	●	●	●
G		G thread	●	●	●	●	●
Ⓓ Option							*3
Drain discharge	**Blank**	Manual drain cock	●	●	●	●	●
Bowl material	**Blank**	Polycarbonate bowl	●	●	●	●	●
	Z	Nylon bowl	●	●	●	●	●
Diff press detect	**Blank**	Without differential pressure detection port	●	●	●	●	●
	Q	With differential pressure detection port (Rc 1/4)				●	●
Flow direction	**Blank**	Standard flow (left → right)	●	●	●	●	●
	X1	Reverse flow (right → left)	●	●	●	●	●
Ⓔ Display unit							
Blank		MPa display (Rc thread), psi display (NPT thread), bar display (G thread)	●	●	●	●	●
J1		MPa display (NPT, G thread)	●	●	●	●	●
Ⓕ Pipe adaptor set (included)							Page 350 *4, *5
Blank		Not included	●	●	●	●	●
A6*W		1/8 pipe adaptor set	●				
A8*W		1/4 pipe adaptor set	●	●	●		
A10*W		3/8 pipe adaptor set	●	●	●		
A15*W		1/2 pipe adaptor set		●	●		
A20*W		3/4 pipe adaptor set			●	●	●
A25*W		1 pipe adaptor set				●	●
A32*W		1 1/4 pipe adaptor set				●	●
*** Adaptor thread**							
Blank		Rc thread	●	●	●	●	●
N		NPT thread	●	●	●	●	●
G		G thread	●	●	●	●	●
Ⓖ Bracket (included)							Page 346
Blank		Not included	●	●	●	●	●
BW		C type bracket	●	●	●	●	●

⚠ Precautions for model No. selection

*1 : Refer to pages 116 to 123 for specifications, dimensions and flow characteristics.
*2 : G and NPT threads are available for IN, OUT and drain outlet.
*3 : Select options for drainage, bowl material and differential pressure detection. When selecting options for several items, list options in order from the top.
*4 : The pipe adaptor set and C type bracket cannot be used together.
*5 : The joiner set is enclosed with the pipe adaptor set.



Regulator: copper and PTFE-free

R1000/R2000/R3000 R4000/R6000/R8000 -W-P6 Series

Copper ion prevention treatment

● Port size: 1/8 to 1

JIS symbol 

RoHS CAD

How to order

R1000 - 6 ( ) - W - T P6 - ( ) - A6W ( ) * Refer to page 30 for the explanation of the option.

- Ⓐ Model No.
- Ⓑ Port size
- (White type)
- Copper and PTFE free specifications
- Ⓒ Port thread
- Ⓓ Option
- Ⓔ Display unit
- Ⓕ Pipe adaptor set (included)
- Ⓖ Bracket (included)

Code	Description	Ⓐ Model No. R1000	R2000	R3000	R4000	R6000	R8000
Ⓑ Port size							
6	1/8	●					
8	1/4	●	●	●	●		
10	3/8		●	●	●		
15	1/2				●		
20	3/4					●	●
25	1					●	●
Ⓒ Port thread							*2
Blank	Rc thread	●	●	●	●	●	●
N	NPT thread	●	●	●	●	●	●
G	G thread	●	●	●	●	●	●
Ⓓ Option							*3
Pressure range **Blank**	0.05 to 0.85 MPa	●	●	●	●	●	●
L	0.05 to 0.35 MPa	●	●	●	●	●	●
Pressure relief **Blank**	With relief mechanism	●	●	●	●	●	●
N	Non-relief	●	●	●	●	●	●
Pressure gauge **T**	No pressure gauge (gauge port (1/4) is assembled sealed)	●	●	●	●	●	●
T6	Pressure gauge ready (gauge port (Rc 1/8) is left open) *6	●	●	●	●	●	●
T8	Pressure gauge ready (gauge port (1/4) is left open) *6	●	●	●	●	●	●
Flow direction **Blank**	Standard flow (left → right), knob downward	●	●	●	●	●	●
X1	Reverse flow (right → left), knob downward	●	●	●	●	●	●
X2	Standard flow (left → right), knob upward	●	●	●	●	●	●
X3	Reverse flow (right → left), knob upward	●	●	●	●	●	●
Ⓔ Display unit							
Blank	MPa display (Rc thread), psi display (NPT thread), bar display (G thread)	●	●	●	●	●	●
J1	MPa display (NPT, G thread)	●	●	●	●	●	●
Ⓕ Pipe adaptor set (included)							Page 350 *4, *5
Blank	Not included	●	●	●	●	●	●
A6*W	1/8 pipe adaptor set	●					
A8*W	1/4 pipe adaptor set	●	●	●	●		
A10*W	3/8 pipe adaptor set	●	●	●	●		
A15*W	1/2 pipe adaptor set		●	●	●		
A20*W	3/4 pipe adaptor set				●	●	●
A25*W	1 pipe adaptor set						●
A32*W	1 1/4 pipe adaptor set						●
*** Adaptor thread**							
Blank	Rc thread	●	●	●	●	●	●
N	NPT thread	●	●	●	●	●	●
G	G thread	●	●	●	●	●	●
Ⓖ Bracket (included)							Page 346
Blank	Not included	●	●	●	●	●	●
BW	C type bracket	●	●	●	●	●	●
B3W	L type bracket	●	●	●	●	●	
B4W	B type bracket		●				

⚠ Precautions for model No. selection

*1 : Refer to pages 136 to 142 for specifications, dimensions and flow characteristics.
*2 : G threads and NPT threads are available for IN, OUT, and gauge ports.
*3 : Select any one of the options.
*4 : The pipe adaptor set and C type bracket cannot be used together.
*5 : The joiner set is enclosed with the pipe adaptor set.
*6 : The pressure gauge must be prepared separately.
T6:G49D-6-P10-P6(L:G49D-6-P04-P6)
T8:G59D-8-P10-P6(L:G59D-8-P04-P6)



Reverse regulator: copper and PTFE-free

R1100/R2100/R3100 R4100/R6100/R8100 -W-P6 Series

Copper ion prevention treatment

● Port size: 1/8 to 1

JIS symbol 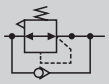

RoHS CAD

How to order

R1100 - 6 ☐ - W - T P6 - ☐ - A6 ☐

* Refer to page 30 for the explanation of the option.

Ⓐ Model No. (R1100)

(White type) Ⓒ Port thread

Copper and PTFE free specifications Ⓓ Option

Ⓖ Bracket (included)

Ⓕ Pipe adaptor set (included)

Ⓑ Port size

Ⓔ Display unit

Code	Description	Ⓐ Model No. R1100	R2100	R3100	R4100	R6100	R8100
Ⓑ Port size							
6	1/8	●					
8	1/4	●	●	●	●		
10	3/8		●	●	●		
15	1/2				●		
20	3/4					●	●
25	1					●	●
Ⓒ Port thread							*2
Blank	Rc thread	●	●	●	●	●	●
N	NPT thread	●	●	●	●	●	●
G	G thread	●	●	●	●	●	●
Ⓓ Option							*3, *4
Pressure range **Blank**	0.05 to 0.85 MPa	●	●	●	●	●	●
Pressure range **L**	0.05 to 0.35 MPa	●	●	●	●	●	●
Pressure relief **Blank**	With relief mechanism	●	●	●	●	●	●
Pressure relief **N**	Non-relief	●	●	●	●	●	●
Pressure gauge **T**	No pressure gauge (gauge port (1/4) is assembled sealed)	●	●	●	●	●	●
Pressure gauge **T6**	Pressure gauge ready (gauge port (Rc 1/8) is left open) *7	●	●	●	●	●	●
Pressure gauge **T8**	Pressure gauge ready (gauge port (1/4) is left open) *7	●	●	●	●	●	●
Flow direction **Blank**	Standard flow (left → right), knob downward	●	●	●	●	●	●
Flow direction **X1**	Reverse flow (right → left), knob downward	●	●	●	●	●	●
Flow direction **X2**	Standard flow (left → right), knob upward	●	●	●	●	●	●
Flow direction **X3**	Reverse flow (right → left), knob upward	●	●	●	●	●	●
Ⓔ Display unit							
Blank	MPa display (Rc thread), psi display (NPT thread), bar display (G thread)	●	●	●	●	●	●
J1	MPa display (NPT, G thread)	●	●	●	●	●	●
Ⓕ Pipe adaptor set (included)							Page 350 *5, *6
Blank	Not included	●	●	●	●	●	●
A6*W	1/8 pipe adaptor set	●					
A8*W	1/4 pipe adaptor set	●	●	●	●		
A10*W	3/8 pipe adaptor set	●	●	●	●		
A15*W	1/2 pipe adaptor set		●	●	●		
A20*W	3/4 pipe adaptor set				●	●	●
A25*W	1 pipe adaptor set						●
A32*W	1 1/4 pipe adaptor set						●
*** Adaptor thread**							
Blank	Rc thread	●	●	●	●	●	●
N	NPT thread	●	●	●	●	●	●
G	G thread	●	●	●	●	●	●
Ⓖ Bracket (included)							Page 346
Blank	Not included	●	●	●	●	●	●
BW	C type bracket	●	●	●	●	●	●
B3W	L type bracket	●	●	●	●	●	
B4W	B type bracket		●				

⚠ Precautions for model No. selection

*1 : Refer to pages 144 to 150 for specifications, dimensions and flow characteristics.
*2 : G and NPT threads are available for IN, OUT, and gauge ports.
*3 : Select any one of the options.
*4 : Positions of check valve and pressure gauge cannot be changed. If the IN and OUT directions must be reversed, indicate “X1” at the end of the option field.
*5 : The pipe adaptor set and C type bracket cannot be used together.
*6 : The joiner set is enclosed with the pipe adaptor set.
*7 : The pressure gauge must be prepared separately.
T6:G49D-6-P10-P6(L:G49D-6-P04-P6)
T8:G59D-8-P10-P6(L:G59D-8-P04-P6)



Lubricator: copper and PTFE-free

L1000/L3000 L4000/L8000-W Series

Copper ion prevention treatment　　Copper and PTFE-free as standard.

● Port size: 1/8 to 1

JIS symbol

RoHS　CAD

How to order

L1000 - 6 ○ - W - C - ○ - A6 ○

Ⓐ Model No.

(White type)

Ⓖ Bracket (included)

Ⓑ Port size

Ⓒ Port thread

Ⓓ Option

Ⓔ Display unit

Ⓕ Pipe adaptor set (included)

* Refer to page 30 for the explanation of the option.

Code	Description	Ⓐ Model No. L1000	L3000	L4000	L8000
Ⓑ Port size					
6	1/8	●			
8	1/4	●	●	●	
10	3/8		●	●	
15	1/2			●	
20	3/4				●
25	1				●
Ⓒ Port thread					*2
Blank	Rc thread	●	●	●	●
N	NPT thread	●	●	●	●
G	G thread	●	●	●	●
Ⓓ Option					*3
Drain discharge **Blank**	Without manual cock	●	●	●	●
Bowl material **Blank**	Polycarbonate bowl	●	●	●	●
Bowl material **Z**	Nylon bowl	●	●	●	●
Bowl material **M**	Metal bowl		●	●	●
Flow direction **Blank**	Standard flow (left → right)	●	●	●	●
Flow direction **X1**	Reverse flow (right → left)	●	●	●	●
Ⓔ Display unit					
Blank	MPa display (Rc thread), psi display (NPT thread), bar display (G thread)	●	●	●	●
J1	MPa display (NPT, G thread)	●	●	●	●
Ⓕ Pipe adaptor set (included)					Page 350 *5, *6
Blank	Not included	●	●	●	●
A6*W	1/8 pipe adaptor set	●			
A8*W	1/4 pipe adaptor set	●	●	●	
A10*W	3/8 pipe adaptor set	●	●	●	
A15*W	1/2 pipe adaptor set		●	●	
A20*W	3/4 pipe adaptor set			●	●
A25*W	1 pipe adaptor set			●	●
A32*W	1 1/4 pipe adaptor set				●
*** Adaptor thread**					
Blank	Rc thread	●	●	●	●
N	NPT thread	●	●	●	●
G	G thread	●	●	●	●
Ⓖ Bracket (included)					Page 346
Blank	Not included	●	●	●	●
BW	C type bracket	●	●	●	●

⚠ Precautions for model No. selection

*1 : Refer to pages 152 to 158 for specifications, dimensions and flow characteristics.
*2 : G and NPT threads are available for IN and OUT.
*3 : Select options for the drainage and bowl material. When selecting options for several items, list options in order from the top.
*4 : The observation dome material will change to polyacetal resin when the nylon bowl or metal bowl is selected.
*5 : The pipe adaptor set and C type bracket cannot be used together.
*6 : The joiner set is enclosed with the pipe adaptor set.

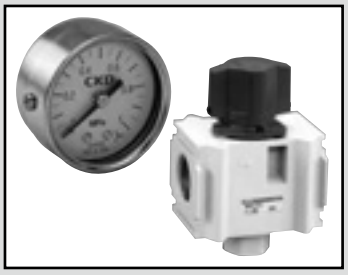

Other components: copper and PTFE-free

Pressure gauge Residual pressure exhaust valve Exhaust cleaner

G49D-P6 V3000-W FA*31 Series
G59D-P6 V3010-W V6010-W

RoHS

How to order

● Pressure gauge

G49D - 6 - ○ - P6

- 6: Port size: R1/8
- ○: Pressure display
- P6: Copper and PTFE free specifications

Code	Description
Ⓒ Pressure display (MPa) *1	
P02	0 to 0.2 MPa
P04	0 to 0.4 MPa
P10	0 to 1.0 MPa

G59D - 8 - ○ - P6

- 8: Port size: R1/4
- ○: Pressure display
- P6: Copper and PTFE free specifications

Code	Description
Ⓒ Pressure display (MPa) *1	
P02	0 to 0.2 MPa
P04	0 to 0.4 MPa
P10	0 to 1.0 MPa
P20	0 to 2.0 MPa

⚠ Precautions for model No. selection

*1: Refer to page 367 for dimensions.

Other components

● Residual pressure exhaust valve
· V3000-W (Page 182)
· V3010-W/V6010-W (Page 185)

* The above devices are standard parts, and used with copper and PTFE-free specifications.

● Exhaust cleaner
· FA*31 (Page 778)

Modular design
F.R.L.

Outdoor Series

■ **Refining and pressure adjusting components/F.R.L. unit**

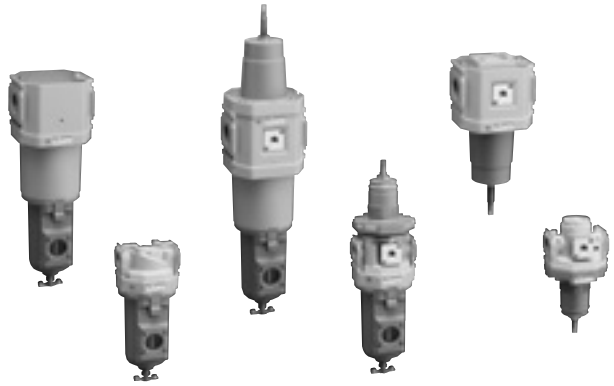

CONTENTS

Product introduction 322
Series variation 323

Filter/regulator

● Filter/regulator (WW4000/8000) 324
● Filter/regulator (BW7019) 328

Air filter

● Air filter (FW4000/8000) 330
● Oil mist filter (MW4000/8000) 334

Regulator

● Regulator (RW4000/8000) 338

Lubricator

● Lubricator (LW4000/8000) 342

● Bracket (B) 346
⚠ Safety precautions 354

First in the industry Can be used outdoors as well

Perfect for outdoors!

A series proven for outdoor use is now available in CKD's FR Series, acclaimed for its long service life and low pressure loss. Long-term outdoor use is supported, even in harsh environments.

All-metal exterior and stainless steel screws improve the durability for outdoor use

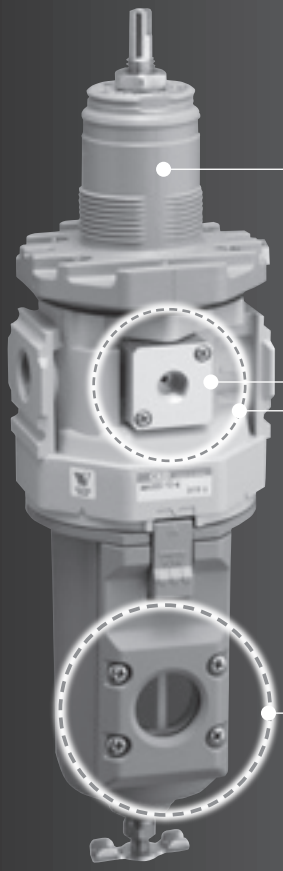

● All-metal cover and gauge plug
Weather resistance is improved by using metal for the resin parts of general-purpose items

●Excellent maintainability
The inside of the cup is visible from the metal cup window (tempered glass).
The stainless steel screws make disassembly and reassembly easy.

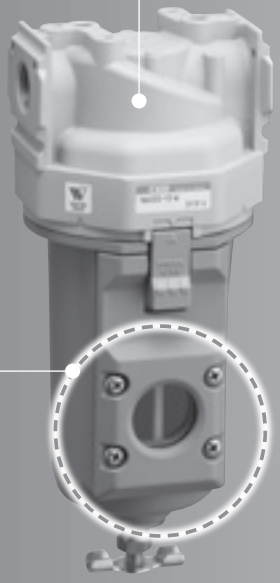

Compound cycle test equivalent to 7-year acceleration cleared
Ozone exposure test 400 hours cleared
Proven durability for outdoor use

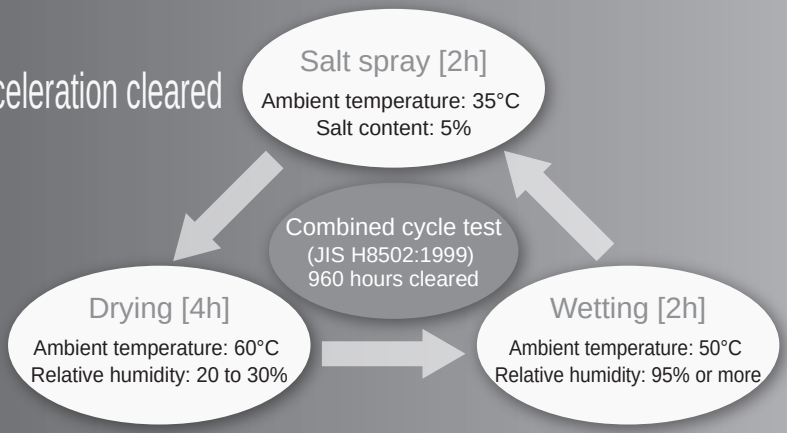

Warranty of up to 3 years will give you long-term peace of mind (option)

To support use in plants and overseas, a 3-year warranty from the date of delivery and 1-year warranty from initial use are available.
(with inspection certificate, inspection guidelines, traceability system diagram)

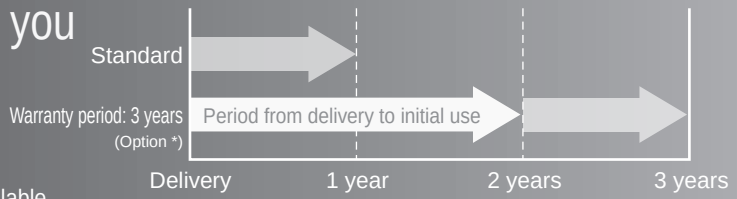

* The specifications and drawings must be agreed upon.

Introducing the dependable FR Series!

WEATHER PROOF This logo represents CKD's guarantee of its products for outdoor use.

Outdoor use system configuration

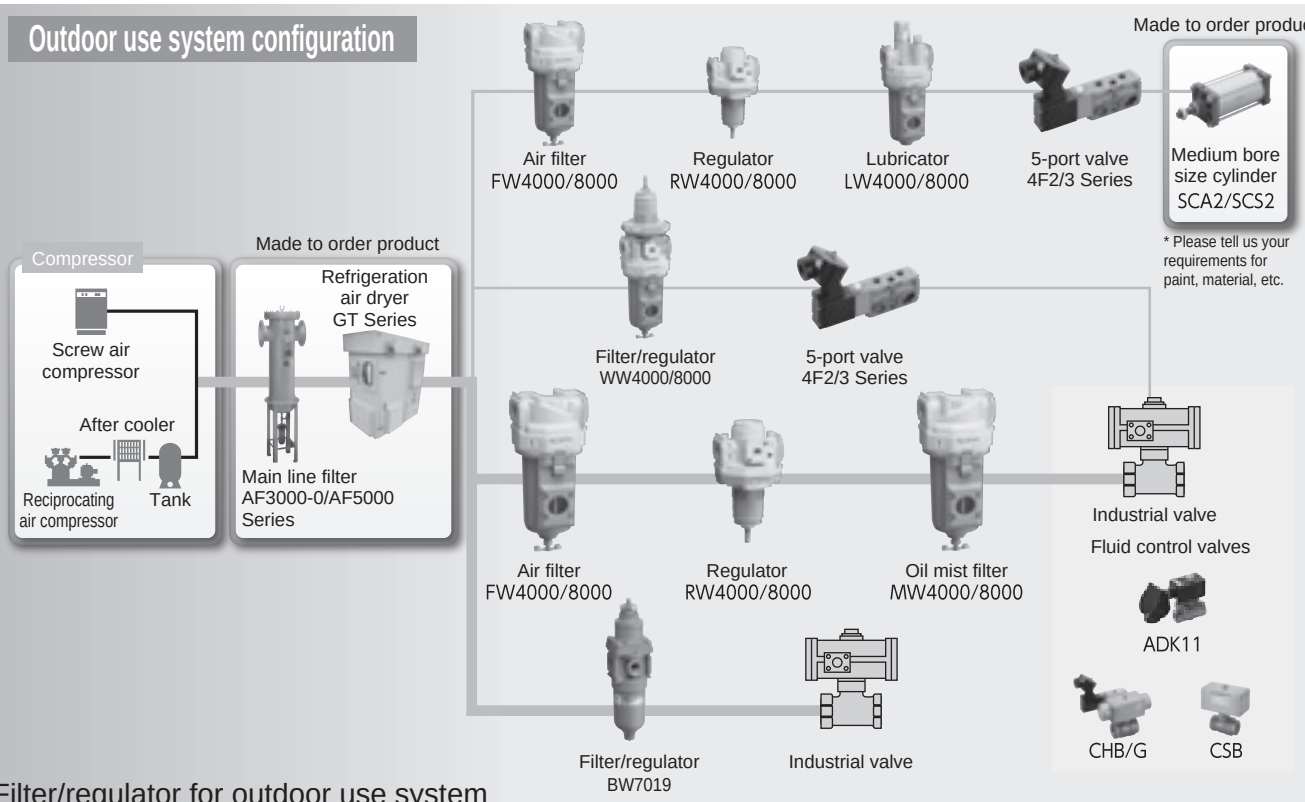

Filter/regulator for outdoor use system

	Series/appearance		Port size (Rc/NPT/G) 1/4	3/8	1/2	3/4	1	Max. flow rate m³/min (Reference) 1/4	3/8	1/2	3/4	1	Page
4000 Series	Filter/regulator **WW4000**		●	●	●			2.5	4.35	4.75			324
	Air filter **FW4000**		●	●	●			1.32	2.14	3.0			330
	Oil mist filter **MW4000**	M type Filtration 0.01 μm	●	●	●			0.825					334
		S type Filtration 0.3 μm						1.0					
	Regulator **RW4000**		●	●	●			2.5	4.4	5.0			338
	Lubricator **LW4000**		●	●	●			1.0	1.7	2.7			342
8000 Series	Filter/regulator **WW8000**					●	●				10		324
	Air filter **FW8000**					●	●				6.4	6.8	330
	Oil mist filter **MW8000**	M type Filtration 0.01 μm				●	●				2.6		334
		S type Filtration 0.3 μm									2.9		
	Regulator **RW8000**					●	●				14.0	11.0	338
	Lubricator **LW8000**					●	●				6.3	10.0	342
	Filter/regulator **BW7019**		●				0.9						328

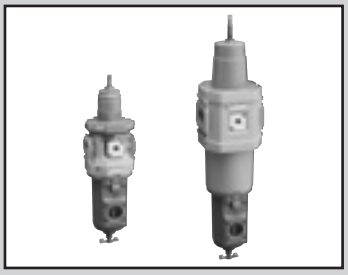

Filter/regulator for outdoor use

WW4000/WW8000-W Series

A series of outdoor specification products.

● Port size: 1/4 to 1

JIS symbol 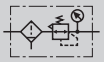

RoHS CAD

Specifications

Item		WW4000-W	WW8000-W
Working fluid		Compressed air	
Max. working pressure	MPa	1.0 (≈150 psi, 10 bar) *1, *2	
Proof pressure	MPa	1.5 (≈220 psi, 15 bar)	
Fluid temperature	°C	5 (41°F) to 60 (140°F)	
Ambient temperature	°C	-10 (14°F) to 60 (140°F) (no freezing)	
Filtration rating	μm	5 or 0.3	
Set pressure	MPa	0.05 (≈7.3 psi, 0.5 bar) to 0.85 (≈120 psi, 8.5 bar)	
Pressure relief		With relief mechanism	
Drain capacity	cm^3	80	80 (*3)
Port size	Rc,NPT,G	1/4,3/8,1/2	3/4,1
Weight	kg	1.1	2.3

*1: In the case of "F" with auto-drain, the min. working pressure of auto-drain is 0.1 MPa or more.
Air is purged with initial drainage until pressure reaches 0.1 MPa.
*2: In the case of "F1" with auto-drain, the min. working pressure of auto-drain is 0.15 MPa.
*3: Up to 170 cm^3 is stored with the manual cock only.

Option weight

* Add to the weight of the standard accessories. Unit: kg

Code	Drain discharge		Knob	Attachment
	F	F1	K	BW
WW4000	0.02	0.02	0.1	0.21
WW8000	0.02	0.02	0.1	0.36

Flow characteristics

● WW4000-8-W

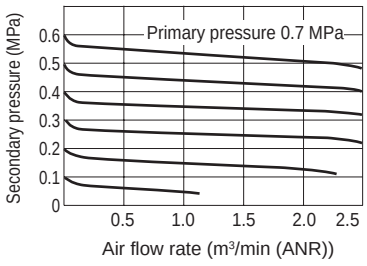

● WW4000-10-W

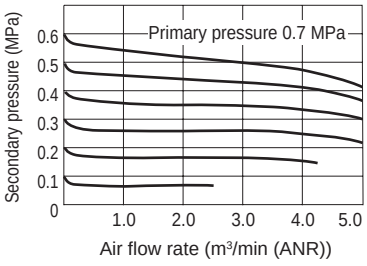

● WW4000-15-W

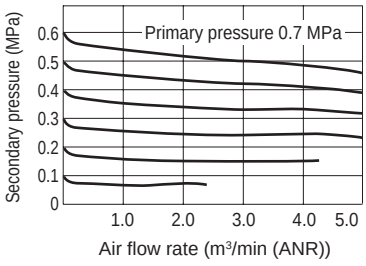

● WW8000-20-W

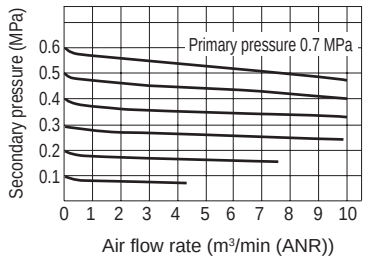

● WW8000-25-W

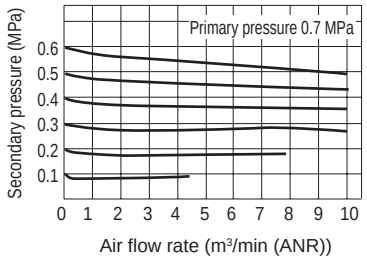

Pressure characteristics

● WW4000-W

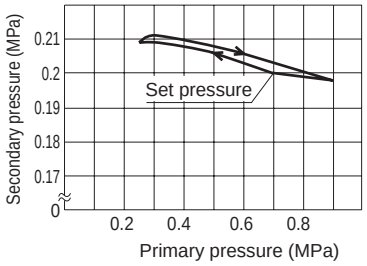

● WW8000-W

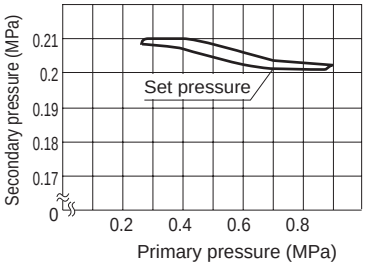

How to order

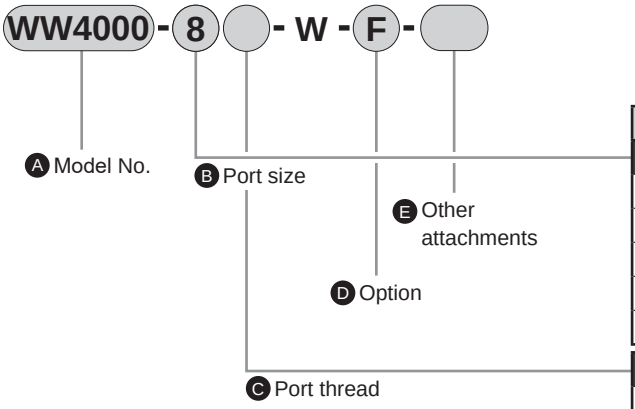

Code	Description	A Model No. WW4000	A Model No. WW8000
B Port size			
8	1/4	●	
10	3/8	●	
15	1/2	●	
20	3/4		●
25	1		●
C Port thread			*1, *2
Blank	Rc thread (pressure unit: MPa temperature display unit: °C)	●	●
N	NPT thread (pressure unit: psi temperature display unit: °F)	●	●
G	G thread (pressure unit: bar temperature display unit: °C)	●	●
D Option			*3, *4
Drain discharge *5 — **Blank**	With manual cock	●	●
Drain discharge *5 — **F**	Auto-drain with manual override (NO: Exhaust when not pressurized)	●	●
Drain discharge *5 — **F1**	Auto-drain, man OVRD (NC: no press→no exhaust)	●	●
Element — **Blank**	5 µm	●	●
Element — **Y**	0.3 µm (submicron) *5	●	●
Knob — **Blank**	Without knob	●	●
Knob — **K**	With knob	●	●
Warranty period — **Blank**	1 year after delivery	●	●
Warranty period — **G**	3 years after delivery *6, 7	●	●
Warranty period — **G**	(with inspection certificate, inspection guidelines, traceability system diagram)	●	●
Flow direction — **Blank**	Standard flow (left → right)	●	●
Flow direction — **X1**	Reverse flow (right → left)	●	●
E Other attachments			Page 346
Blank	Not included	●	●
BW	C-bracket	●	●
GW49P	Pressure gauge (GW49D-6-P10) *8	●	●

⚠ Precautions for model No. selection

*1 : G and NPT threads are available for IN, OUT, gauge port and drain outlet of auto-drain.
*2 : NPT and G threads are sold for overseas use.
Select the Rc thread in the case of those for the Japanese market.
(In the case of those for the Japanese market, the pressure unit must be MPa and temperature display must be °C due to the Measurement Act.)
*3 : Select options for the drainage, element, knob, warranty period and flow direction.
When selecting options for several items, list options in order from the top.
*4 : Refer to page 280 for the auto-drain usage conditions.
*5 : Refer to page 330 for max. processing flow rate when option "Y" is selected.
*6 : The warranty period of option G is 3 years from the date of delivery or 1 year from initial use.
*7 : For option G, the specifications and drawings must be agreed upon.
*8 : The pressure gauge cannot be included when using NPT threads or G threads. (Consult with CKD if required.)

Internal structure and parts list

● WW4000-W

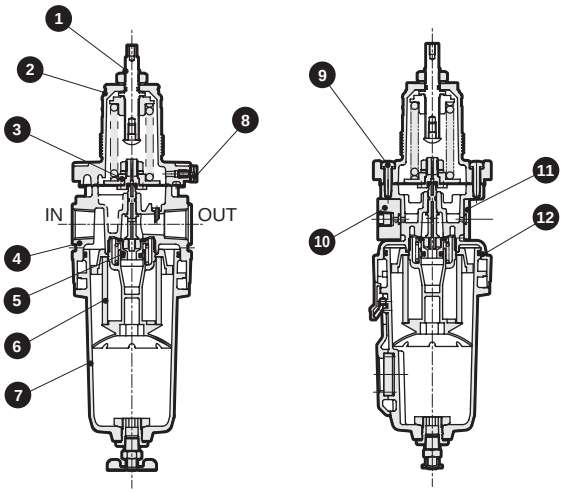

● WW8000-W

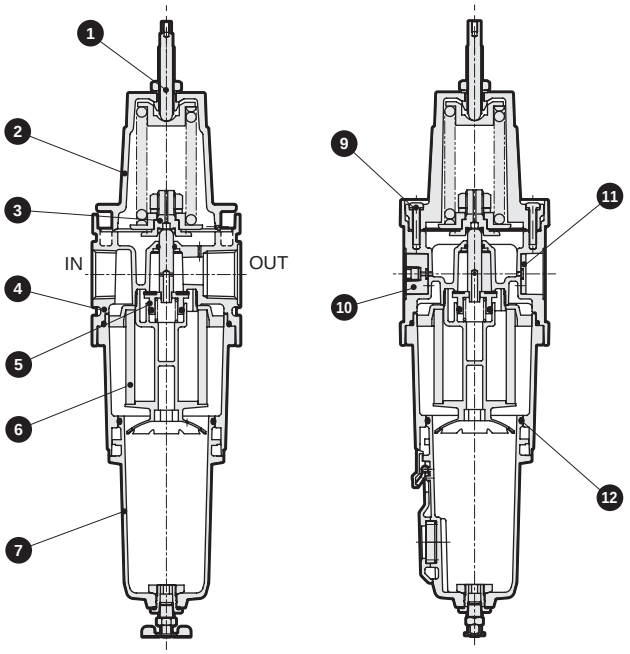

No.	Part name	Material
1	Adjusting screw assembly	Stainless steel (aluminum, nitrile rubber, polyacetal resin: WW4000 only)
2	Cover	Aluminum alloy die-casting
3	Diaphragm assembly	Stainless steel, nitrile rubber, aluminum
4	Body	Aluminum alloy die-casting
5	Valve assembly	Copper alloy, hydrogenated nitrile rubber (polyacetal resin: WW4000 only)
6	Element	Polypropylene
7	Metal bowl assembly	Aluminum alloy die-casting, copper alloy, zinc, nitrile rubber
8	Adaptor	Stainless steel
9	Screws	Stainless steel
10	Gauge plug assembly	Aluminum, nitrile rubber, stainless steel
11	Seal plug assembly	Aluminum, nitrile rubber, stainless steel
12	O-ring	Special nitrile rubber

Dimensions

● WW4000-W

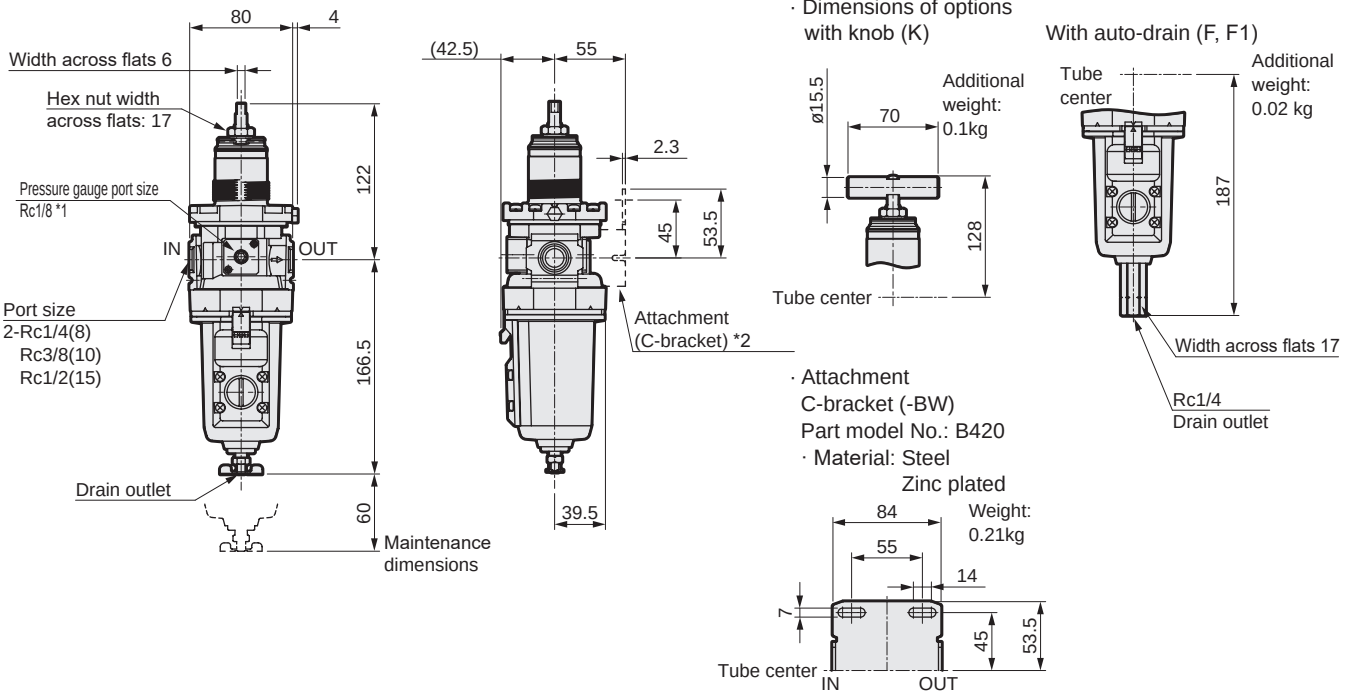

● WW8000-W

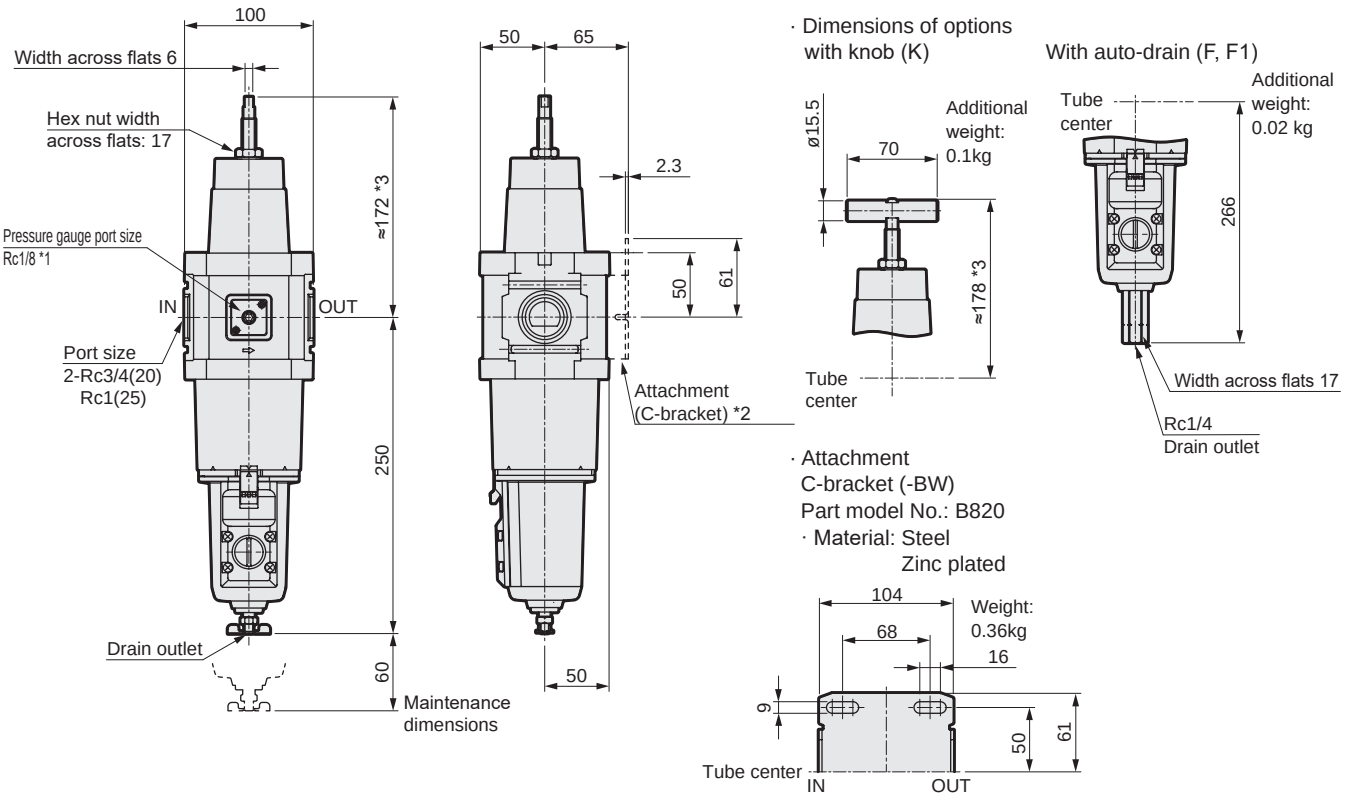

*1: The pressure gauge connection port is left open when shipped. Use the included pipe plug when sealing.
*2: Bracket is optional.
*3: Dimensions at the setting pressure of 0 MPa

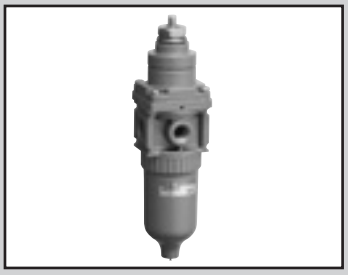

Filter/regulator Outdoor Series

BW7019 Series

Air filter/regulator integrated.

● Port size: Rc1/4

JIS symbol

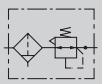

RoHS CAD

Specifications

1 MPa ≈ 145.0 psi, 1 MPa = 10 bar

Item		BW7019
Max. working pressure	MPa	1.0 (≈145 psi, 10 bar)
Proof pressure	MPa	1.5 (≈217 psi, 15 bar)
Fluid temperature	°C	5 (41°F) to 60 (140°F)
Ambient temperature	°C	-10 (14°F) to 60 (140°F) (no freezing)
Filtration	μm	5
Set pressure	MPa	0.04 (≈6 psi, 1 bar) to 0.83 (≈120 psi, 8 bar)
Pressure relief		With relief mechanism
Port size	Rc	1/4
Weight	kg	0.45

*1: When a piston drain (D) is used, min. working pressure is 0.1 MPa. Do not use this device on equipment that experiences impacts.

Flow characteristics

● BW7019 Rc1/4

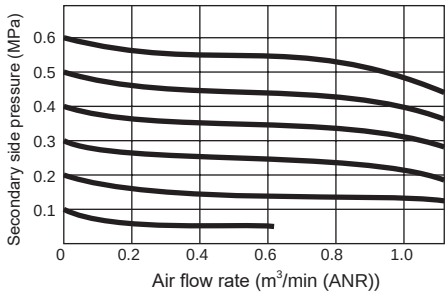

Pressure characteristics

● BW7019

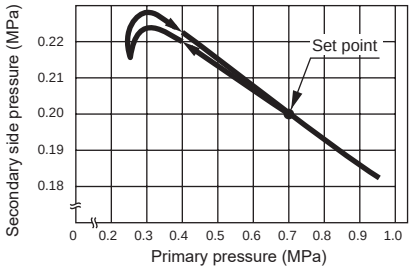

How to order

BW7019 - 2C - ○ - ○

Ⓐ Port size

Ⓑ Option

Ⓒ Other attachments

Code		Description
Ⓐ Port size		
2C		Rc1/4
Ⓑ Option		
Drain discharge	Blank	Tire valve
	D	Piston drain
Element	Blank	5 μm
Warranty period	Blank	1 year after delivery
	G	3 years after delivery *1 *2 (with inspection certificate, inspection guidelines, traceability system diagram)
Flow direction	Blank	Standard flow (left → right)
	X1	Reverse flow (right → left)
Ⓒ Other attachments		
Blank		Not included
GW49P		Pressure gauge (GW49D-6-P10)
BW		Bracket (6506-W)

Precautions for model No. selection

*1: The warranty period of option G is 3 years from the date of delivery or 1 year from initial use, whichever comes first.

*2: For option G, the specifications and drawings must be agreed upon.

Option weight

* Add to the weight of the standard accessories. Unit: kg

	Drain discharge	Pressure gauge	Bracket
Code	D	G	B
BW7019	0	0.086	0.03

Internal structure and parts list

● BW7019

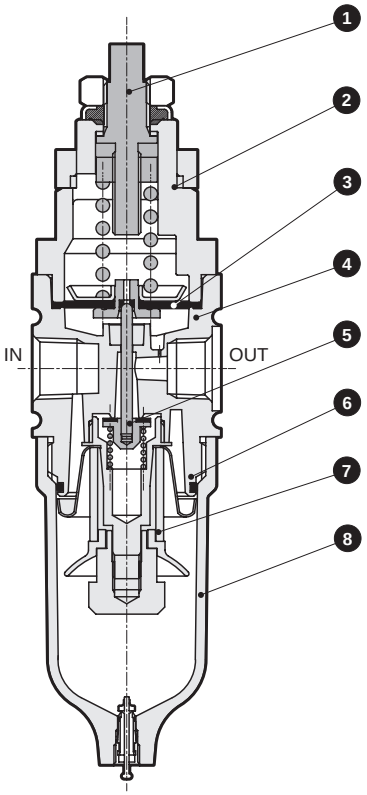

No.	Part name	Material
1	Adjusting screw	Stainless steel
2	Cover	Zinc alloy die-casting, aluminum
3	Diaphragm assembly	Nitrile rubber, copper, zinc alloy die-casting
4	Body	Aluminum alloy die-casting
5	Valve assembly	Copper alloy/hydrogenated nitrile rubber
6	O-ring	Special nitrile rubber
7	Element	Polypropylene
8	Metal bowl assembly	Zinc alloy die-casting

Dimensions

CAD

● BW7019

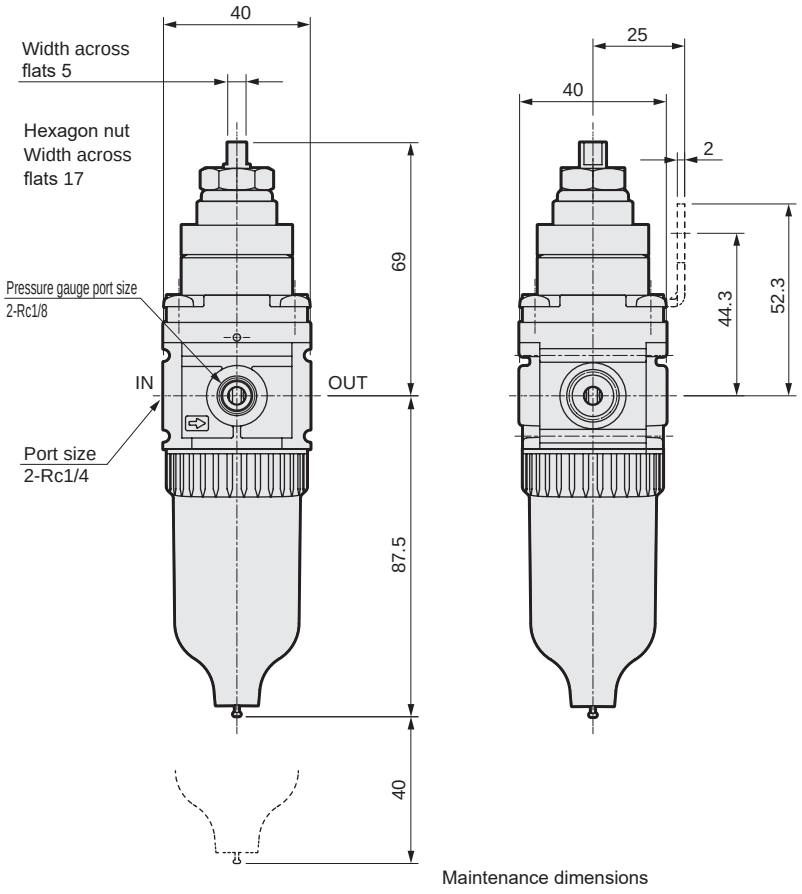

Maintenance dimensions

● Attachment
Bracket (-BW)
Part model No.: 6506-W

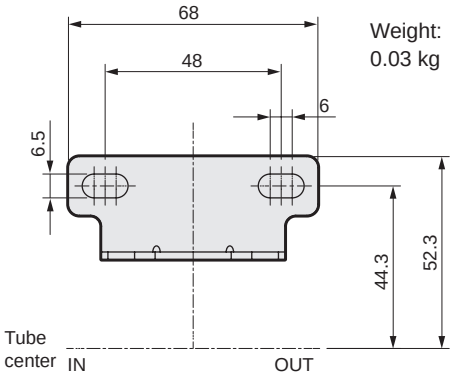

Weight: 0.03 kg

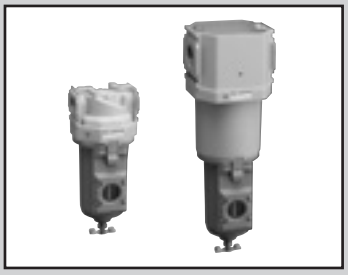

Air filter/outdoor series

FW4000/FW8000-W Series

A series of outdoor specification products.

● Port size: 1/4 to 1

JIS symbol 

RoHS CAD

Specifications

Item		FW4000-W	FW8000-W
Working fluid		Compressed air	
Max. working pressure	MPa	1.0 (≈150 psi, 10 bar) *1, *2	
Proof pressure	MPa	1.5 (≈220 psi, 15 bar)	
Fluid temperature	°C	5 (41°F) to 60 (140°F)	
Ambient temperature	°C	-10 (14°F) to 60 (140°F) (no freezing)	
Filtration rating	μm	5 or 0.3	
Drain capacity	cm^3	80	80 (*3)
Port size	Rc,NPT,G	1/4,3/8,1/2	3/4,1
Weight	kg	0.55	1.26

*1: In the case of "F" with auto-drain, the min. working pressure of auto-drain is 0.1 MPa.
Air is purged with initial drain until pressure reaches 0.1 MPa.
*2: In the case of "F1" with auto-drain, the min. working pressure of auto-drain is 0.15 MPa.
*3: Up to 170 cm^3 is stored with the manual cock only.

Option weight

* Add to the weight of the standard accessories. Unit: kg

Code	Drain discharge		Attachment
	F	F1	BW
FW4000	0.02	0.02	0.21
FW8000	0.02	0.02	0.36

Flow characteristics

● FW4000-8-W

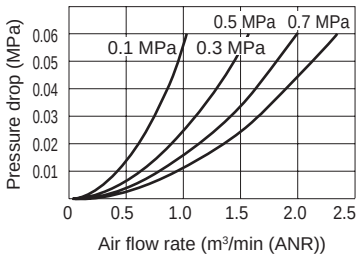

● FW4000-10-W

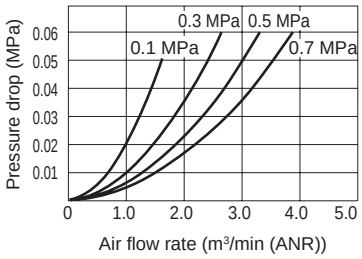

● FW4000-15-W

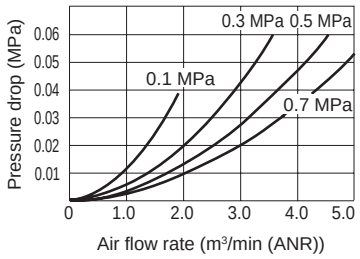

● FW8000-20-W

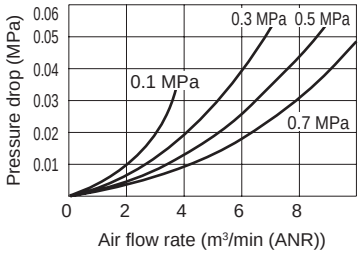

● FW8000-25-W

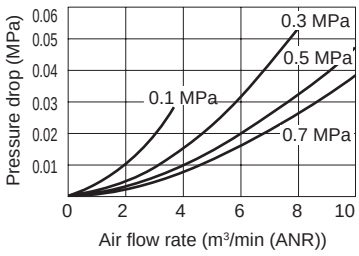

● FW4000/FW8000-*-W-Y (0.3 μm element)

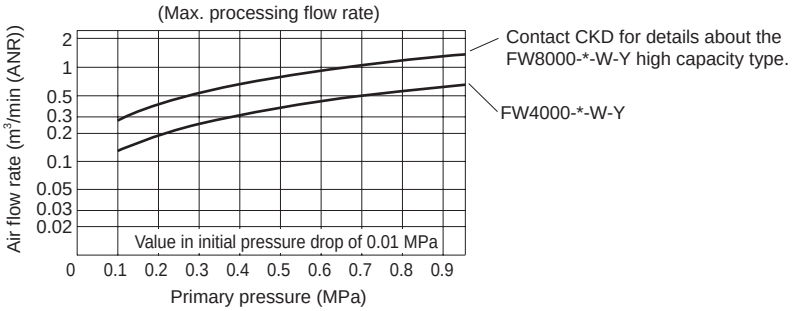

How to order

FW4000 - 8 ○ - W - F - ○

- Ⓐ Model No.
- Ⓑ Port size
- Ⓒ Port thread
- Ⓓ Option
- Ⓔ Other attachments

Code	Description	Ⓐ Model No. FW4000	Ⓐ Model No. FW8000
Ⓑ Port size			
8	1/4	●	
10	3/8	●	
15	1/2	●	
20	3/4		●
25	1		●
Ⓒ Port thread			*1, *2
Blank	Rc thread (pressure unit: MPa temperature display unit: °C)	●	●
N	NPT thread (pressure unit: psi temperature display unit: °F)	●	●
G	G thread (pressure unit: bar temperature display unit: °C)	●	●
Ⓓ Option			*3
Drain discharge *4	**Blank** With manual cock	●	●
	F Auto-drain with manual override (NO: Exhaust when not pressurized)	●	●
	F1 Auto-drain, man OVRD (NC: no press→no exhaust)	●	●
Element	**Blank** 5 µm	●	●
	Y 0.3 µm (submicron)	●	●
Warranty period	**Blank** 1 year after delivery	●	●
	G 3 years after delivery *5, 6	●	●
	(with inspection certificate, inspection guidelines, traceability system diagram)	●	●
Flow direction	**Blank** Standard flow (left → right)	●	●
	X1 Reverse flow (right → left)	●	●
Ⓔ Other attachments			Page 346
Blank	Not included	●	●
BW	C-bracket	●	●

⚠ Precautions for model No. selection

*1: G and NPT threads are available for IN, OUT and drain outlet of auto-drain.
*2: NPT and G threads are sold for overseas use.
Select the Rc thread in the case of those for the Japanese market.
(In the case of those for the Japanese market, the pressure unit must be MPa and temperature display must be °C due to the Measurement Act.)
*3: Select options for the drainage, element, warranty period and flow direction.
When selecting options for several items, list options in order from the top.
*4: Refer to page 280 for the auto-drain usage conditions.
*5: The warranty period of option G is 3 years from the date of delivery or 1 year from initial use.
*6: For option G, the specifications and drawings must be agreed upon.

Internal structure and parts list

● FW4000-W

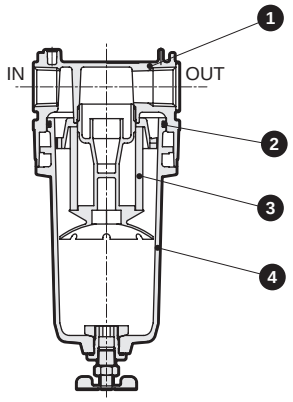

● FW8000-W

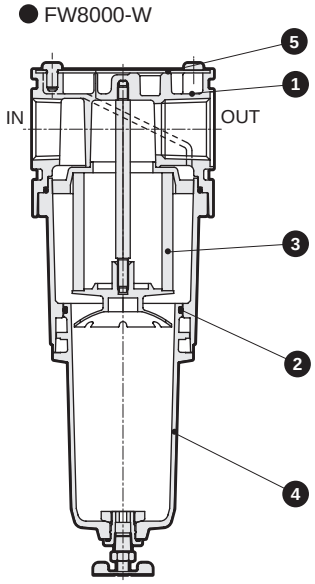

No.	Part name	Material
1	Body	Aluminum alloy die-casting
2	O-ring	Special nitrile rubber
3	Element	Polypropylene
4	Metal bowl assembly	Aluminum alloy die-casting, copper alloy, zinc, nitrile rubber
5	Plate cover	Aluminum

Dimensions

● FW4000-W

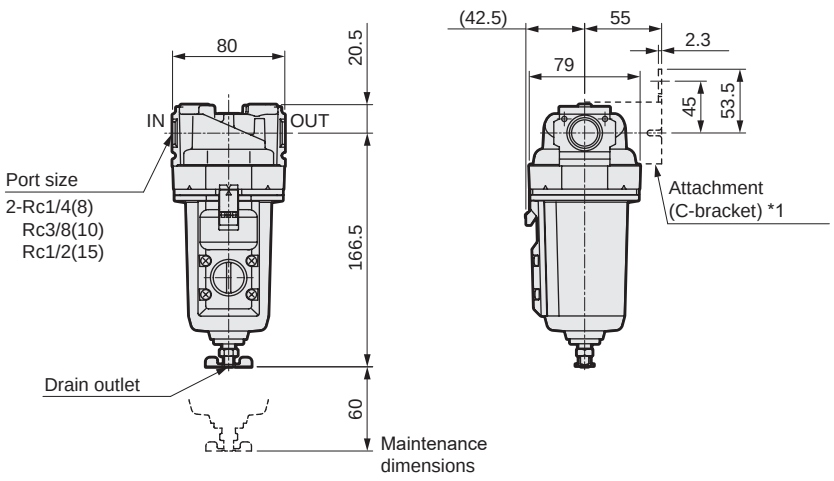

· Dimensions of options
With auto-drain (F, F1)

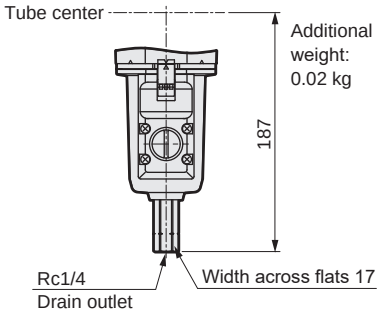

· Attachment
C-bracket (-BW)
Part model No.: B420
· Material: Steel
Zinc plated

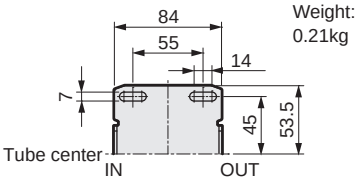

● FW8000-W

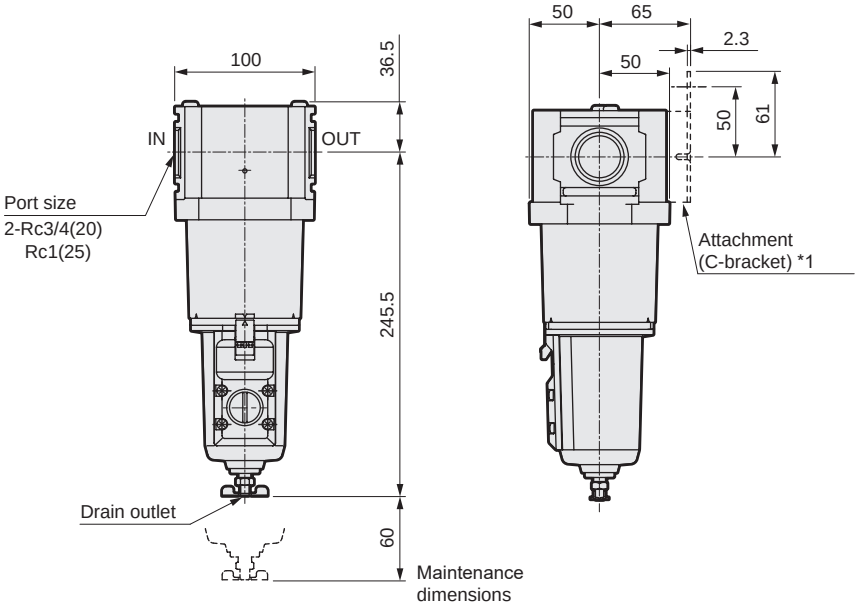

*1: Bracket is optional.

· Dimensions of options
With auto-drain (F, F1)

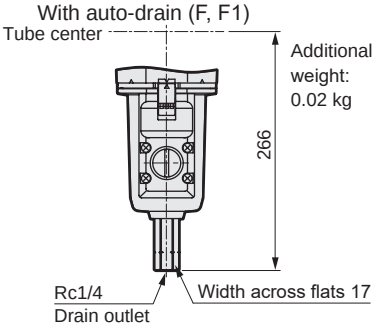

· Attachment
C-bracket (-BW)
Part model No.: B820
· Material: Steel
Zinc plated

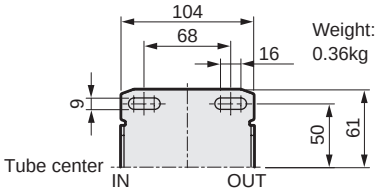

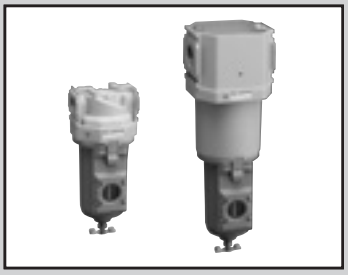

Oil mist filter for outdoor use

MW4000/MW8000-W Series

A series of outdoor specification products.

● Port size: 1/4 to 1

JIS symbol 

RoHS CAD

Specifications

Item		MW4000-W	MW8000-W
Working fluid		Compressed air	
Working pressure	MPa	0.1 (≈15 psi, 1 bar) to 1.0 (≈150 psi, 10 bar) *2	
Proof pressure	MPa	1.5 (≈220 psi, 15 bar)	
Drain capacity	cm^3	80	80
Port size	Rc,NPT,G	1/4,3/8,1/2	3/4,1
Weight	kg	0.62	1.45

Mantle option name		Blank (M type)	S (S type)
Max. processing flow rate *1 ℓ/min(ANR) Primary pressure 0.7 MPa	MW4000-□-W	825	1000
	MW8000-□-W	2600	2900
Fluid temperature	°C	5 (41°F) to 60 (140°F)	
Ambient temperature	°C	-10 (14°F) to 60 (140°F) (no freezing)	
Filtration rating	μm	0.01 (nominal)	0.3
Secondary side oil concentration	mg/m^3	0.01 or less (0.1 or less after oil saturation) *3, *4	0.5 or less *3
Mantle (element) change		1 year (6000 hours) or pressure drop 0.1 MPa (≈15 psi, 1 bar)	

*1: Use within the max. processing flow rate.
If the max. processing flow rate is exceeded temporarily, or if the filter is installed at a location with high levels of pulsation, the mantle could be damaged or oil or drainage, etc., could splatter to the secondary side and result in a terminal malfunction.
*2: In the case of "F1" with auto-drain, the min. working pressure is 0.15 MPa.
*3: The secondary oil concentration is the value when the primary oil concentration is 30 mg/m^3 and inlet air temperature is 21°C.
*4: Install an oil mist filter (S type) as a pre-filter on the primary side to prevent early clogging.

Option weight

* Add to the weight of the standard accessories. Unit: kg

Code	Drain discharge	Attachment
	F1	BW
MW4000	0.02	0.21
MW8000	0.02	0.36

Flow characteristics (max. processing flow rate)

● MW*000-W-M

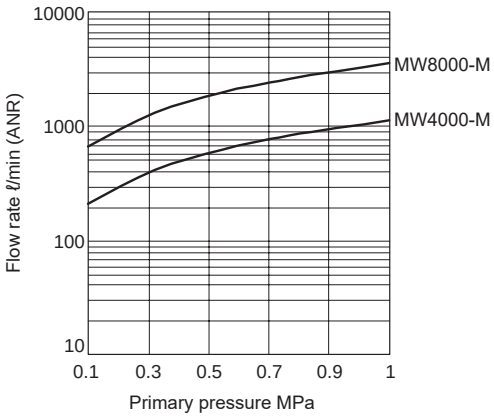

● MW*000-W-S

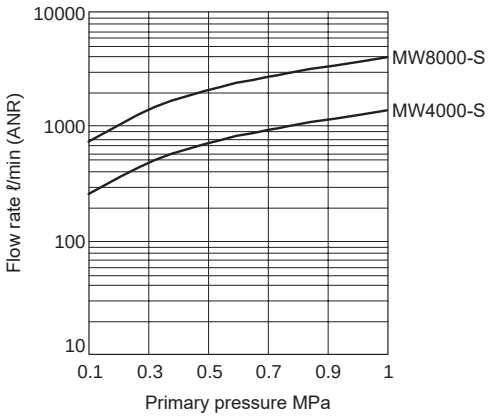

How to order

MW4000 - 8 ○ - W - S - ▭

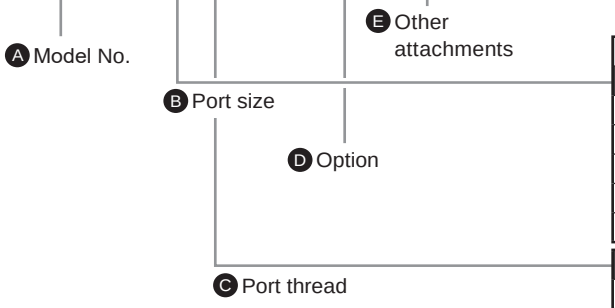

Code	Description	Ⓐ Model No. MW4000	Ⓐ Model No. MW8000
Ⓑ Port size			
8	1/4	●	
10	3/8	●	
15	1/2	●	
20	3/4		●
25	1		●
Ⓒ Port thread			*1, *2
Blank	Rc thread (pressure unit: MPa temperature display unit: °C)	●	●
N	NPT thread (pressure unit: psi temperature display unit: °F)	●	●
G	G thread (pressure unit: bar temperature display unit: °C)	●	●
Ⓓ Option			*3
Drain disch *4, 5 — **Blank**	With manual cock	●	●
Drain disch *4, 5 — **F1**	Auto-drain, man OVRD (NC: no press→no exhaust)	●	●
Mantle (Element) — **Blank**	M type (nominal 0.01 µm; remaining oil 0.01 mg/m^3)	●	●
Mantle (Element) — **S**	S type (nominal 0.3 µm; remaining oil 0.5 mg/m^3)	●	●
Warranty period — **Blank**	1 year after delivery	●	●
Warranty period — **G**	3 years after delivery (with inspection certificate, inspection guidelines, traceability system diagram) *6, 7	●	●
Flow direction — **Blank**	Standard flow (left → right)	●	●
Flow direction — **X1**	Reverse flow (right → left)	●	●
Ⓔ Other attachments			Page 346
Blank	Not included	●	●
BW	C-bracket	●	●

⚠ Precautions for model No. selection

*1: G and NPT threads are available for IN, OUT and drain outlet of auto-drain.
*2: NPT and G threads are sold for overseas use.
Select the Rc thread in the case of those for the Japanese market.
(In the case of those for the Japanese market, the pressure unit must be MPa and temperature display must be °C due to the Measurement Act.)
*3: Select options for the drainage, mantle, warranty period and flow direction.
When selecting options for several items, list options in order from the top.
*4: NO auto-drain cannot be selected.
*5: Refer to page 354 for the auto-drain usage conditions.
*6: The warranty period of option G is 3 years from the date of delivery or 1 year from initial use.
*7: For option G, the specifications and drawings must be agreed upon.

Internal structure and parts list

● MW4000-W

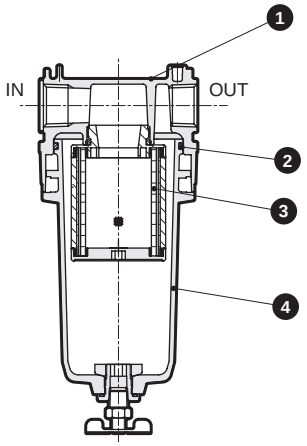

● MW8000-W

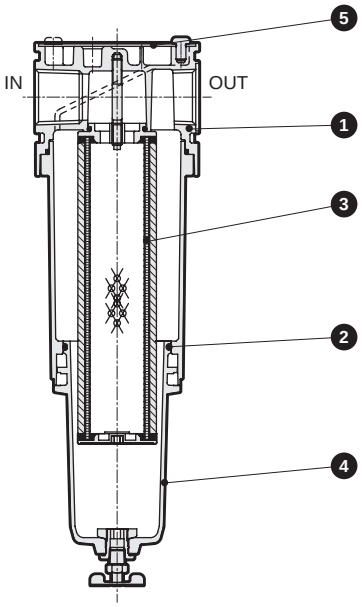

No.	Part name	Material
1	Body	Aluminum alloy die-casting
2	O-ring	Special nitrile rubber
3	Mantle assembly	-
4	Metal bowl assembly	Aluminum alloy die-casting, copper alloy, zinc, nitrile rubber
5	Plate cover	Aluminum

Dimensions

● MW4000-W

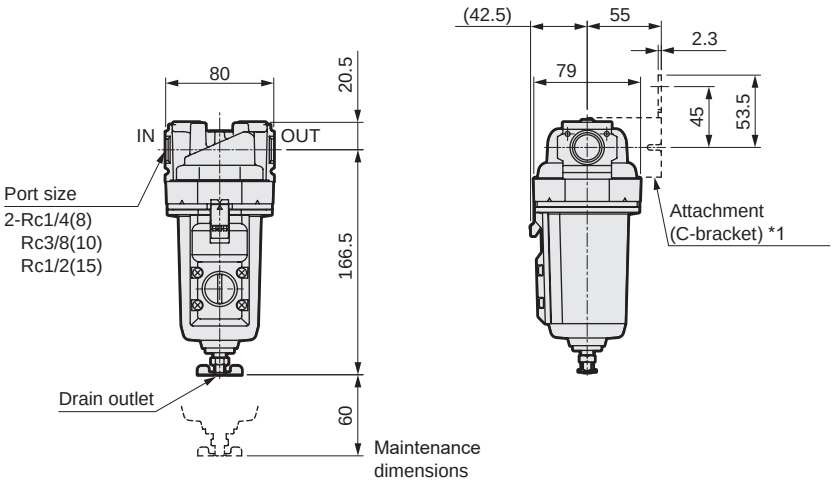

· Dimensions of options
With auto-drain (F1)

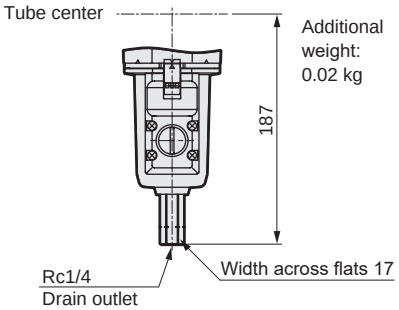

· Attachment
C-bracket (-BW)
Part model No.: B420
· Material: Steel
Zinc plated

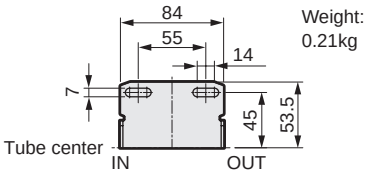

● MW8000-W

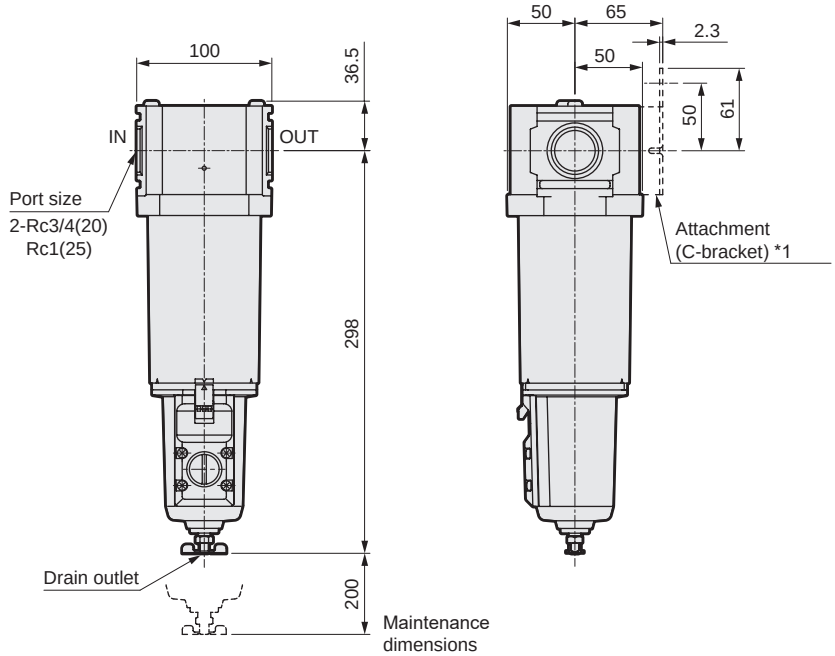

*1: Bracket is optional.

· Dimensions of options
With auto-drain (F1)

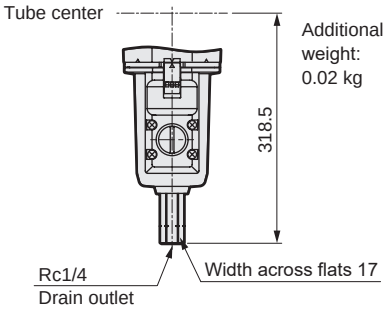

· Attachment
C-bracket (-BW)
Part model No.: B820
· Material: Steel
Zinc plated

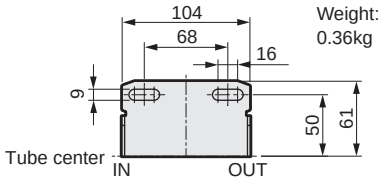

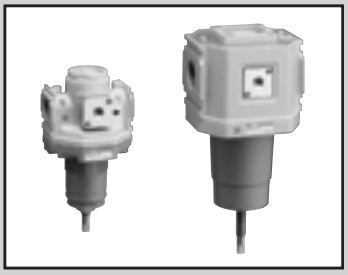

Regulator for outdoor use

RW4000/RW8000-W Series

A series of outdoor specification products.

● Port size: 1/4 to 1

JIS symbol 

RoHS CAD

Specifications

Item		RW4000-W	RW8000-W
Working fluid		Compressed air	
Max. working pressure	MPa	1.0 (≈150 psi, 10 bar)	
Proof pressure	MPa	1.5 (≈220 psi, 15 bar)	
Fluid temperature	°C	5 (41°F) to 60 (140°F)	
Ambient temperature	°C	-10 (14°F) to 60 (140°F) (no freezing)	
Set pressure	MPa	0.05 (≈7.3 psi, 0.5 bar) to 0.85 (≈120 psi, 8.5 bar)	
Pressure relief		With relief mechanism	
Port size	Rc,NPT,G	1/4,3/8,1/2	3/4,1
Weight	kg	0.75	1.65

Option weight

* Add to the weight of the standard accessories. Unit: kg

Code	Knob	Attachment
	K	BW
RW4000	0.1	0.21
RW8000	0.1	0.36

Flow characteristics

● RW4000-8-W

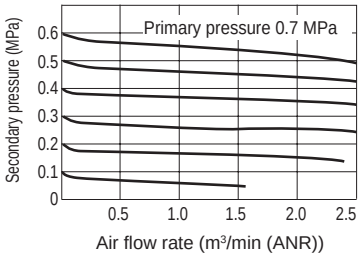

● RW4000-10-W

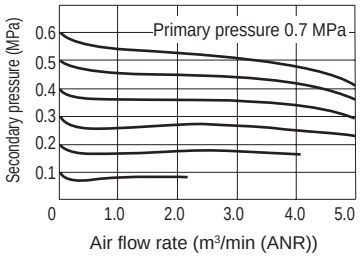

● RW4000-15-W

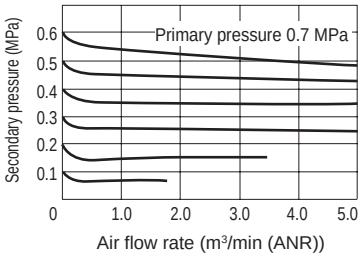

● RW8000-20-W

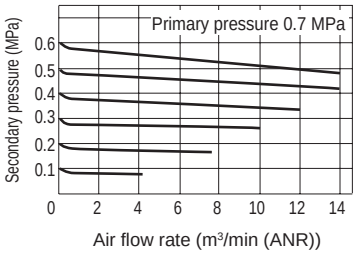

● RW8000-25-W

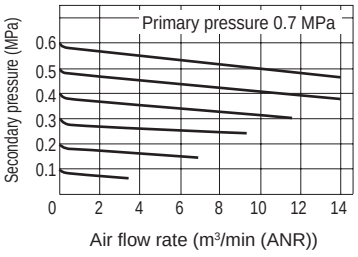

Pressure characteristics

● RW4000-W

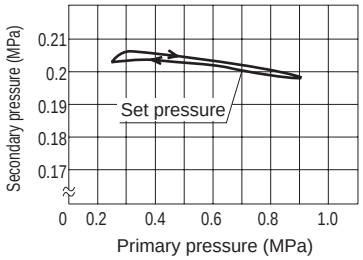

● RW8000-W

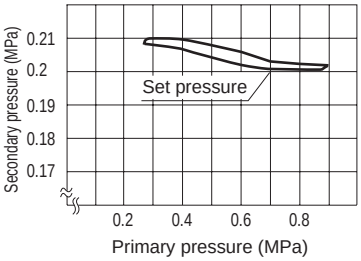

How to order

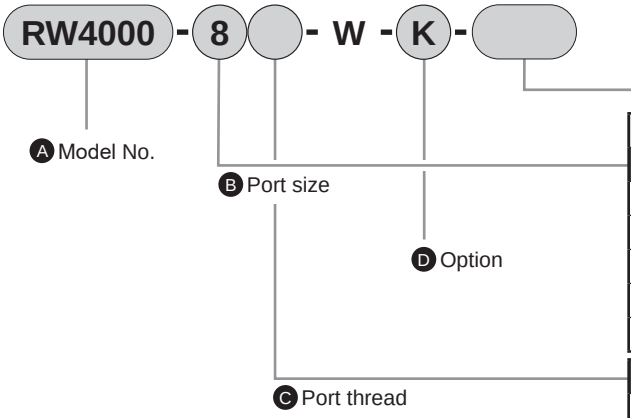

Code	Description	A Model No. RW4000	A Model No. RW8000
B Port size			
8	1/4	●	
10	3/8	●	
15	1/2	●	
20	3/4		●
25	1		●
C Port thread			*1, *2
Blank	Rc thread (pressure unit: MPa temperature display unit: °C)	●	●
N	NPT thread (pressure unit: psi temperature display unit: °F)	●	●
G	G thread (pressure unit: bar temperature display unit: °C)	●	●
D Option			*3, *4
Knob **Blank**	Without knob	●	●
Knob **K**	With knob	●	●
Warranty period **Blank**	1 year after delivery	●	●
Warranty period **G**	3 years after delivery (with inspection certificate, inspection guidelines, traceability system diagram) *4, 5	●	●
Flow direction **Blank**	Standard flow (left → right)	●	●
Flow direction **X1**	Reverse flow (right → left)	●	●
E Other attachments			Page 346
Blank	Not included	●	●
BW	C-bracket	●	●
GW49P	Pressure gauge (GW49D-6-P10) *6	●	●

⚠ Precautions for model No. selection

*1: G threads and NPT threads are available for IN, OUT, and gauge ports.
*2: NPT and G threads are sold for overseas use.
Select the Rc thread in the case of those for the Japanese market.
(In the case of those for the Japanese market, the pressure unit must be MPa and temperature display must be °C due to the Measurement Act.)
*3: Select options for the knob, warranty period and flow direction. When selecting options for several items, list options in order from the top.
*4: The warranty period of option G is 3 years from the date of delivery or 1 year from initial use.
*5: For option G, the specifications and drawings must be agreed upon.
*6: The pressure gauge cannot be included when using NPT threads or G threads. (Consult with CKD if required.)

Internal structure and parts list

● RW4000-W

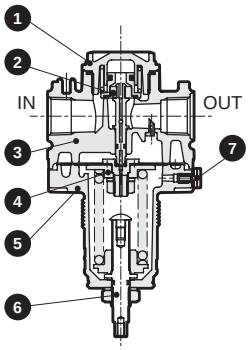

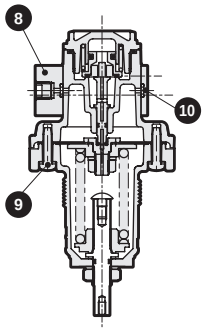

● RW8000-W

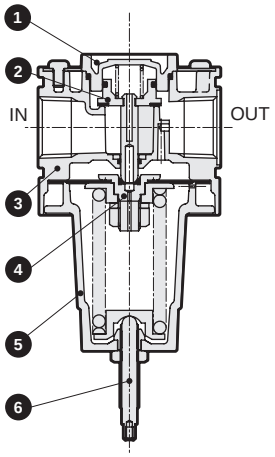

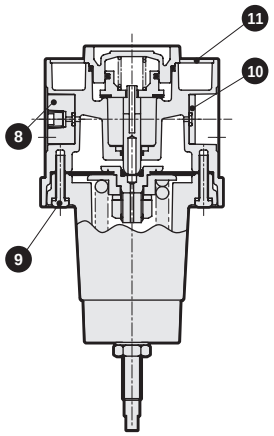

No.	Part name	Material
1	Bottom plug	Aluminum alloy die-casting
2	Valve assembly	Copper alloy, hydrogenated nitrile rubber (polyacetal resin: RW4000 only)
3	Body	Aluminum alloy die-casting
4	Diaphragm assembly	Stainless steel, nitrile rubber, aluminum
5	Cover	Aluminum alloy die-casting
6	Adjusting screw assembly	Stainless steel (aluminum, nitrile rubber, polyacetal resin: RW4000 only)
7	Adaptor	Stainless steel
8	Gauge plug assembly	Aluminum, nitrile rubber, stainless steel
9	Screws	Stainless steel
10	Seal plug assembly	Aluminum, nitrile rubber, stainless steel
11	Plate cover	Aluminum

Dimensions

● RW4000-W

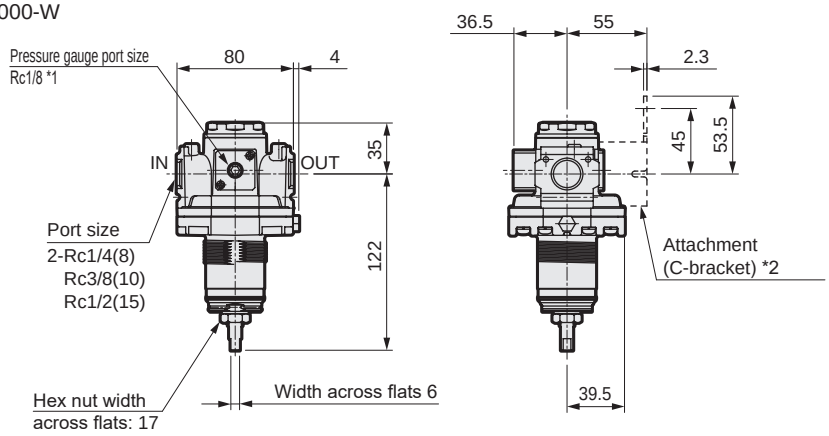

· Dimensions of options with knob (K)

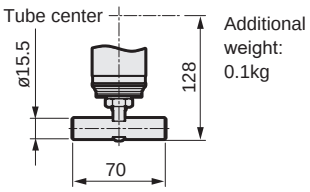

· Attachment
C-bracket (-BW)
Part model No.: B420
· Material: Steel
Zinc plated

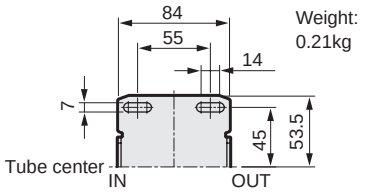

● RW8000-W

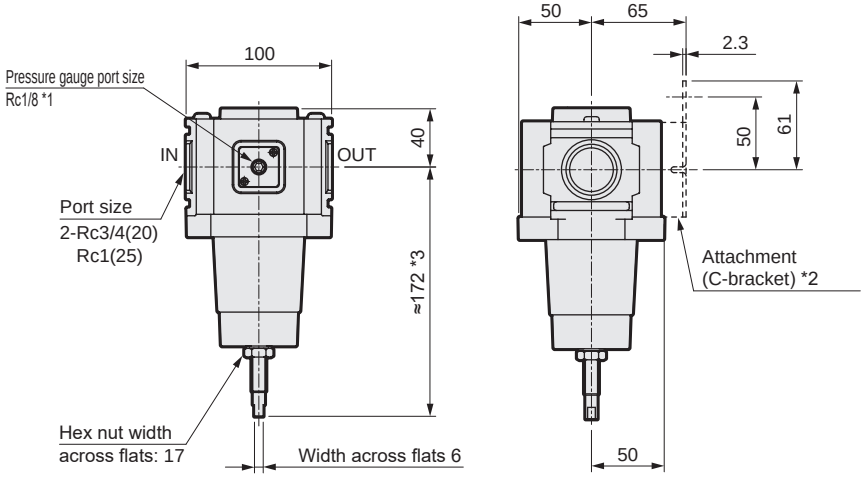

· Dimensions of options with knob (K)

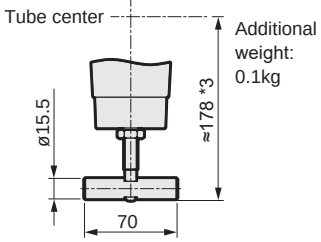

· Attachment
C-bracket (-BW)
Part model No.: B820
· Material: Steel
Zinc plated

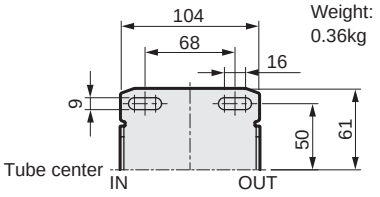

*1: The pressure gauge connection port is left open when shipped.
Use the included pipe plug when sealing.
*2: Bracket is optional.
*3: Dimensions at the setting pressure of 0 MPa

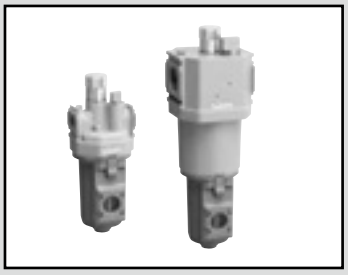

Lubricator Outdoor Series

LW4000/LW8000-W Series

Supplies fine oil mist.

● Port size: 1/4 to 1

JIS symbol 

RoHS CAD

Specifications

1 MPa ≈ 145.0 psi, 1 MPa = 10 bar

Item	LW4000-W	LW8000-W
Working fluid	Compressed air	
Max. working pressure MPa	1.0 (≈145 psi, 10 bar)	
Proof pressure MPa	1.5 (≈217 psi, 15 bar)	
Fluid temperature °C	5 (41°F) to 60 (140°F)	
Ambient temperature °C	-10 (14°F) to 60 (140°F) (no freezing)	
Min. drip flow rate *1 m^3/min (ANR)	0.065	
Oil storage capacity cm^3	170	170 (Max. 360) *2
Oil used	Turbine oil Class 1, ISO VG32 (spindle oil cannot be used)	
Port size Rc, NPT, G	1/4, 3/8, 1/2 (3/4 uses an adapter)	3/4, 1 (1 1/4 uses an adapter)
Weight kg	0.45	1.4

*1: The min. drip flow rate is that at which five drops of turbine oil drip per minute at the primary pressure of 0.5 MPa and inlet air temperature of 20 °C. (It cannot be used for dry fog.)

*2: 300 cm^3 or below from the top of the cup window when lubricating from the filling plug.

Flow characteristics

● LW4000-8-W

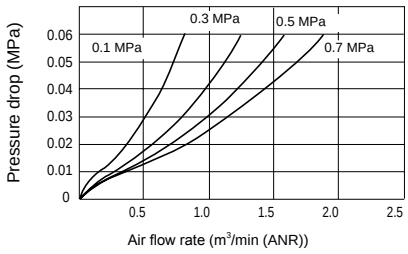

● LW4000-10-W

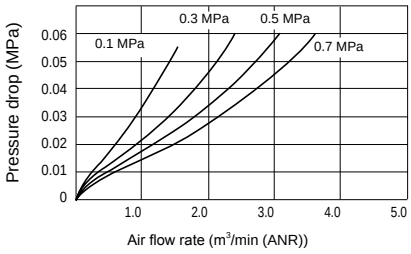

● LW4000-15-W

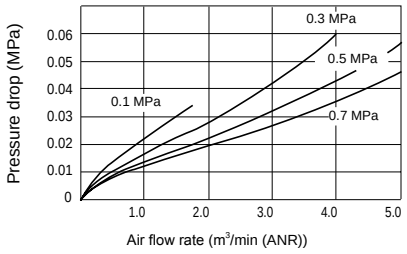

● LW8000-20-W

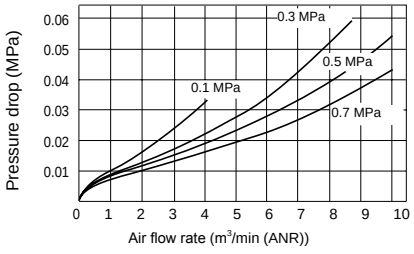

● LW8000-25-W

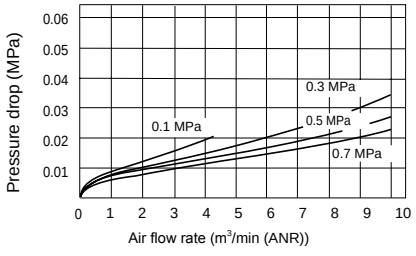

Oil drip rate

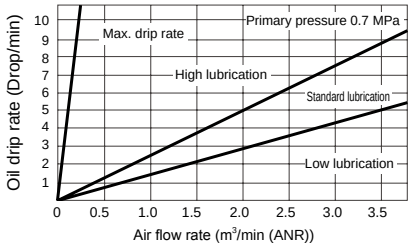

How to order

LW4000 - 8 ○ - W - C - ○

- Ⓐ Model No.
- Ⓑ Port size
- Ⓒ Port thread
- Ⓓ Option
- Ⓔ Bracket (included)

Code		Description	Ⓐ Model No. LW4000	Ⓐ Model No. LW8000
Ⓑ Port size				
8		1/4	●	
10		3/8	●	
15		1/2	●	
20		3/4		●
25		1		●
Ⓒ Port thread				*1 *3
Blank		Rc thread	●	●
N		NPT thread	●	●
G		G thread	●	●
Ⓓ Option				*2
Drain discharge	**Blank**	Without manual cock	●	●
	C	With manual cock	●	●
Warranty period	**Blank**	1 year after delivery	●	●
	G	3 years after delivery *4 *5	●	●
		(with inspection certificate, inspection guidelines, traceability system diagram)	●	●
Flow Direction	**Blank**	Standard flow (left → right)	●	●
	X1	Reverse flow (right → left)	●	●
Ⓔ Bracket (included)				Page 346
Blank		Not included	●	●
BW		C-bracket	●	●

⚠ Precautions for model No. selection

*1: G and NPT threads are available for IN and OUT.
*2: When selecting options for several items, list options in order from the top.
*3: NPT and G threads are sold for overseas use. Select the Rc thread in the case of those for the Japanese market.
(In the case of those for the Japanese market, the pressure unit must be MPa and temperature display unit must be °C due to the Measurement Act.)
*4: The warranty period of option G is 3 years from the date of delivery or 1 year from initial use.
*5: For option G, the specifications and drawings must be agreed upon.

Internal structure and parts list

● LW4000-W

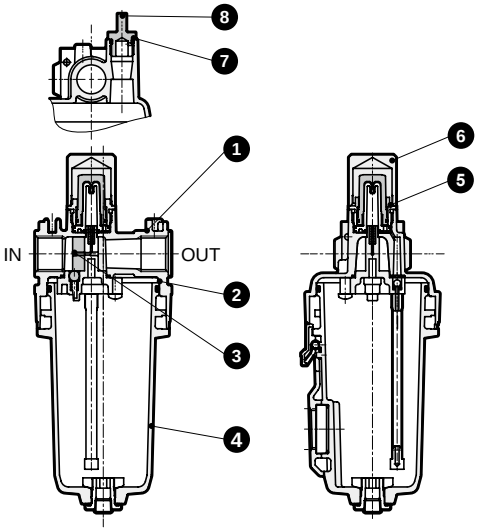

● LW8000-W

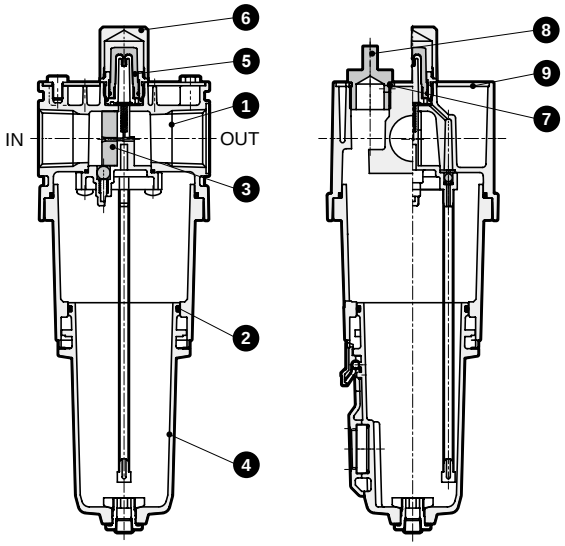

No.	Part name	Material
1	Body	Aluminum alloy die-casting
2	O-ring	Special nitrile rubber
3	Flow guide	Nitrile rubber
4	Metal bowl assembly	Aluminum alloy die-casting, zinc alloy die-casting, stainless steel
5	Adjusting dome assembly	Stainless steel, nitrile rubber, polycarbonate resin
6	Dome cover	Aluminum
7	O-ring	Nitrile rubber
8	Filling plug	Stainless steel
9	Plate cover	Aluminum

Dimensions

● LW4000-W

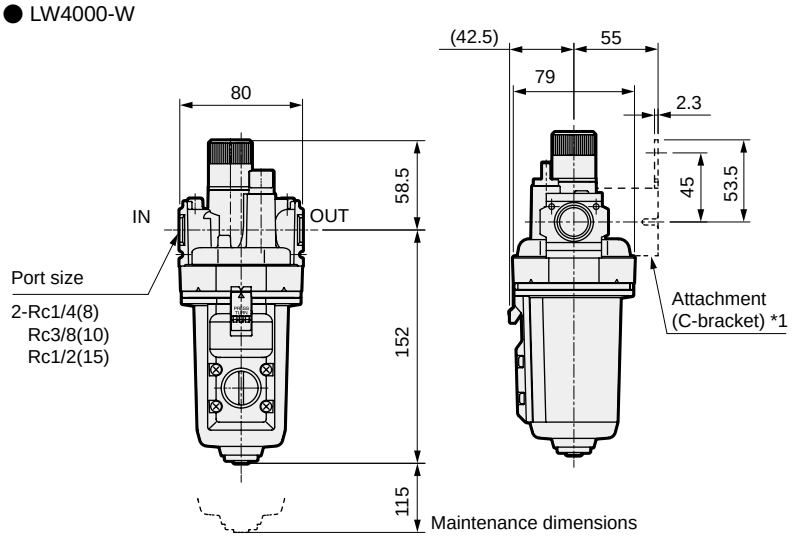

· Optional dimensions
With manual petcock (C)

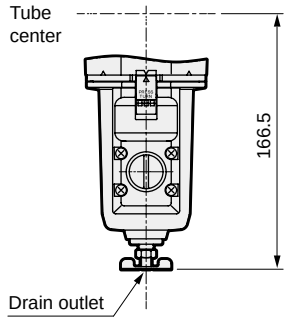

· Attachment
C-bracket (-BW)
Part model No.: B420

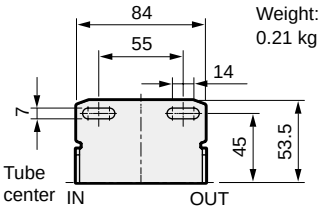

Weight:
0.21 kg

● LW8000-W

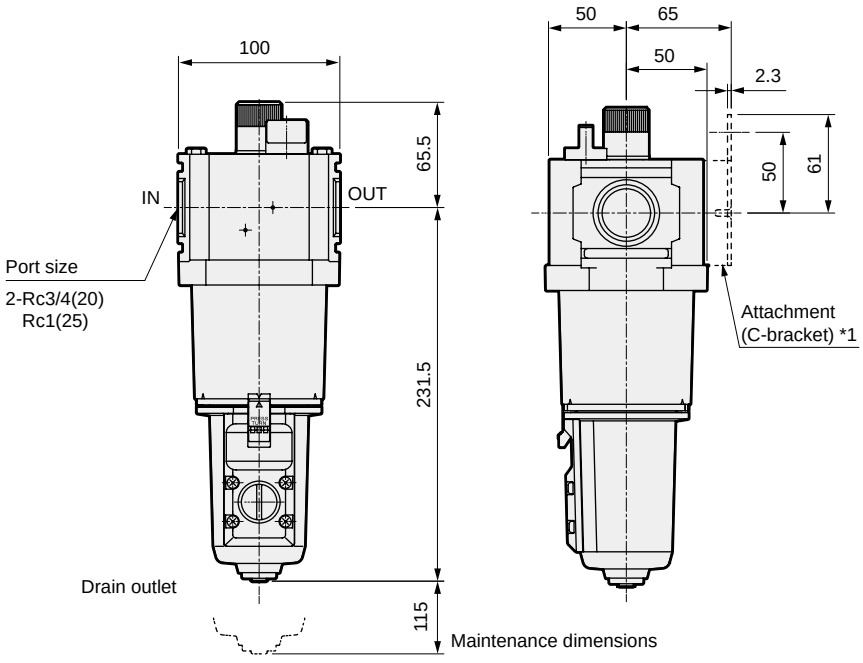

*1: Bracket is optionally included.

· Optional dimensions
With manual petcock (C)

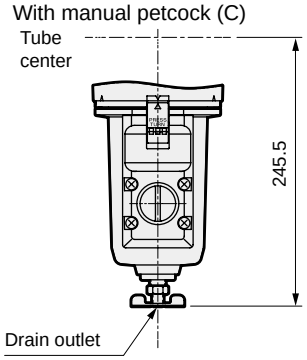

· Attachment
C-bracket (-BW)
Part model No.: B820

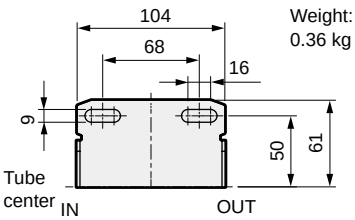

Weight:
0.36 kg

Attachment table

T type bracket set

Model No.	Standard Series	Flame-resistant Series	Oil-prohibited Series	Outdoor Series
B110-W	●			
B310-W	●	●		
B410-W	●	●		
B810-W	●	●		
BW410-W				●
BW810-W				●

C type bracket

Model No.	Standard Series	Flame-resistant Series	Oil-prohibited Series	Outdoor Series
B120	●			
B220	●			
B320	●	●	●	
B420	●	●	●	●
B620	●			
B820	●	●	●	●

L type bracket

Model No.	Standard Series	Flame-resistant Series	Oil-prohibited Series	Outdoor Series
B130	●			
B230	●			
B330	●	●	●	
B430	●	●	●	

Joiner set

Model No.	Standard Series	Flame-resistant Series	Oil-prohibited Series	Outdoor Series
C1000-J100-W	●			
C4000-J400-W	●	●		
C8000-J800-W	●	●		
C4000-JW400-W				●
C8000-JW800-W				●

Distributor

Model No.	Standard Series	Flame-resistant Series	Oil-prohibited Series	Outdoor Series
D101-00-W	●			
D401-00-W	●	●		
D801-00-W	●	●		
D300-W	●			

Pipe adaptor set

Model No.	Standard Series	Flame-resistant Series	Oil-prohibited Series	Outdoor Series
A100-W	●			
A400-W	●	●		
A800-W	●	●		
AW400-W				●
AW800-W				●

Pipe adaptor set with T type bracket

Model No.	Standard Series	Flame-resistant Series	Oil-prohibited Series	Outdoor Series
A100-W-B11W	●			
A400-W-B31W	●	●		
A400-W-B41W	●	●		
A800-W-B81W	●	●		
AW400-W-B41W				●
AW800-W-B81W				●

Radial pipe adaptor set

Model No.	Standard Series	Flame-resistant Series	Oil-prohibited Series	Outdoor Series
A101-W	●			
A401-W	●	●		
A801-W	●	●		

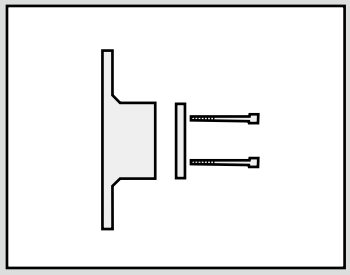

Bracket Standard White Series

B-W/B Series

Joiner Standard White Series

J-W Series

CAD RoHS

Dimensions and applications

T type bracket set

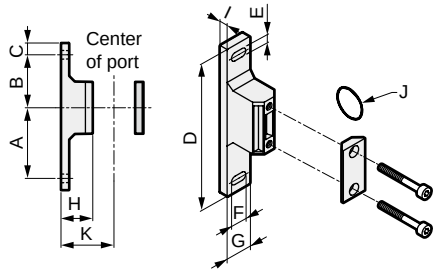

·Material: Polyamide resin (B110-W)
Aluminum alloy die-casting (B310 to B810-W)
Painting (B310 to B810-W)

● Model No.: B110-W / B310-W / B410-W / B810-W

● Applications



Note: Select B410-W when using the 3000-W Series and 4000-W Series combined.

Model No.	Compatible model	A	B	C	D	E	F	G	H	I	J	K	Wt. (kg)
B110-W	1000 Series	45	35	10	100	5.5	7.5	16	25	7.5	JASO-2013	40	0.024
B310-W	2000 Series 3000 Series	60	45	10	125	7	14	22	27	7	JISB2401-P21	45	0.086
B410-W	4000 Series	60	45	10	125	7	14	22	37	7	JISB2401-P21	55	0.094
B810-W	6000 Series 8000 Series	70	50	15	150	9	14	27	37	8	AS568-127	65	0.169

C type bracket

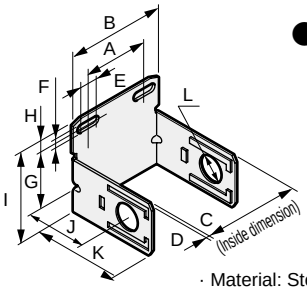

· Material: Steel
Zinc plated

● Applications



● Model No.: B120/B220/B320/B420/B620/B820

● Attachment: BW

Model No.	Compatible model	A	B	C	D	E	F	G	H	I	J	K	L	Wt. (kg)
B120	1000 Series	44	68	40	t2.0	10	6.5	35	8.5	61.5	40	60	ø19.5	0.1
B220	2000 Series	28	54	50	t2.3	10	7	33	8	63	45	69	17.3	0.15
B320	3000 Series	34.5	67	63	t2.3	16.5	7	45	8.5	75.5	45	69	ø21.7	0.17
B420	4000 Series	55	84	80	t2.3	14.0	7	45	8.5	75.5	55	79	ø21.7	0.21
B620	6000 Series	68	104	90	t2.3	16	9	54	11	97.5	60	97	ø35	0.34
B820	8000 Series	68	104	100	t2.3	16	9	50	11	93.5	65	102	ø35	0.36

L type bracket

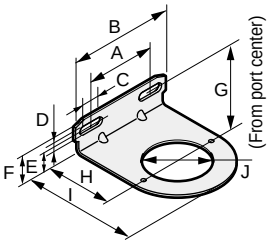

· Material: Steel
Zinc plated

● Applications



● Model No.: B130/B230/B330/B430

● Attachment: B3W

Loosen the mounting nut to remove the knob. After inserting the L type bracket, fix it by the mounting nut. Press the knob in manually after fixing.

Refer to page 357 for details.

Model No.	Compatible model	A	B	C	D	E	F	G	H	I	J	Others	Wt. (kg)
B130	1000 Series	44	68	10	6.5	16	24.5	45	40	59	ø26.5		0.04
B230	2000 Series	28	54	10	7	18	26	52	45	69	38		0.06
B330	3000 Series	34.5	67	16.5	7	17.5	26	58 (63.5)	45	76	ø40	Values in ( ) are for W3000/3100	0.07
B430	4000 Series 6000 Series	55	84	14	7	17.5	26	58	55	94	ø47		0.11

Joiner set

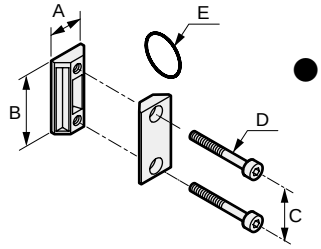

·Material: Polyamide resin (J100-W)
Aluminum alloy die-casting (J400 to J800-W)
Painting (J400, J800-W)

● Applications



● Model No.: C1000-J100-W
C4000-J400-W
C8000-J800-W

Model No.	Compatible model	A	B	C	D	E	Weight (kg)	
C1000-J100-W	1000 Series	10	36	26	M3.5	JAS0-2013	0.011	
C4000-J400-W	2000 Series 3000 Series 4000 Series	21	44	32	M5	JIS B2401-P21	0.036	
C8000-J800-W	6000 Series 8000 Series	26	65	50	M6	AS568-127	0.094	

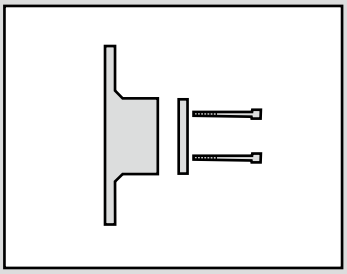

Bracket Outdoor Series

BW Series

Joiner Outdoor Series

JW Series

RoHS CAD

Dimensions

T-bracket set

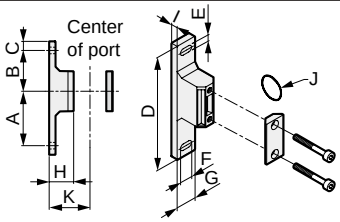

Model No.	Compatibility	A	B	C	D	E	F	G	H	I	J	K	Weight (kg)
BW410-W	4000 Series	60	45	10	125	7	14	22	37	7	JISB2401-P21	55	0.094
BW810-W	8000 Series	70	50	15	150	9	14	27	37	8	AS568-127	65	0.169

Joiner set

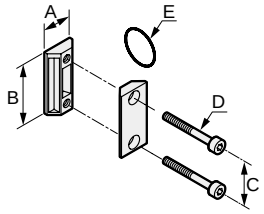

Model No.	Compatibility	A	B	C	D	E	Weight (kg)
C4000-JW400-W	4000 Series	21	44	32	M5	JIS B2401-P21	0.036
C8000-JW800-W	8000 Series	26	65	50	M6	AS568-127	0.094

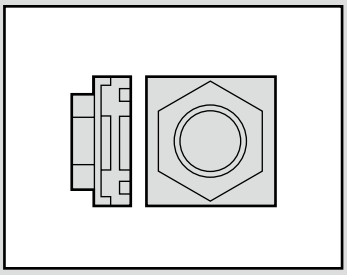

Attached device
Piping adapter

AW400/AW800 Series

Port size: Rc1/4 to Rc1 1/4

RoHS CAD

Dimensions

Piping adapter set

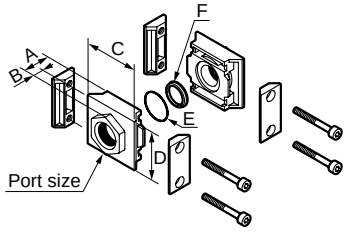

Model No.	Port size	Compatibility	A	B	C	D	E (O-ring)	F (gasket)	Others
AW400-8-W	Rc 1/4	4000 Series	20 (25) {34}	6 (11) {20}	50	45	JISB2401 P21 1 pc.	1 pc.	Values in ( ) are Rc 3/4 Values in { } are Rc1
AW400-10-W	Rc 3/8								
AW400-15-W	Rc 1/2								
AW400-20-W	Rc 3/4								
AW400-25-W	Rc1								
AW800-20-W	Rc 3/4	8000 Series	35 (38)	15 (18)	81	66	AS568-127 1 pc.	1 pc.	Values in ( ) are Rc1 1/4
AW800-25-W	Rc1								
AW800-32-W	Rc1 1/4								

Piping adapter set

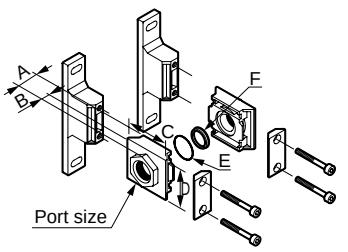

Model No.	Port size	Compatibility	A	B	C	D	E (O-ring)	F (gasket)	Others
AW400-8-W-B41W	Rc 1/4	4000 Series	20 (25) {34}	6 (11) {20}	50	45	JISB2401 P21 1 pc.	1 pc.	Values in ( ) are Rc 3/4 Values in { } are Rc1
AW400-10-W-B41W	Rc 3/8								
AW400-15-W-B41W	Rc 1/2								
AW400-20-W-B41W	Rc 3/4								
AW400-25-W-B41W	Rc1								
AW800-20-W-B81W	Rc 3/4	8000 Series	35 (38)	15 (18)	81	66	AS568-127 1 pc.	1 pc.	Values in ( ) are Rc1 1/4
AW800-25-W-B81W	Rc1								
AW800-32-W-B81W	Rc1 1/4								

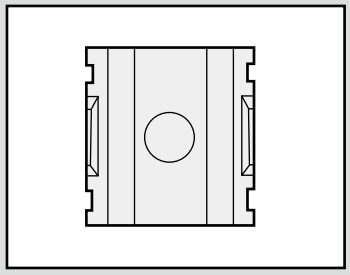

Distributor Standard White Series

D101/D401/D801/D300-W Series

Compatible with pipe branching.

● Port size: 1/8 to 1

JIS symbol

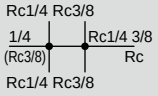

RoHS CAD

Specifications

Item	D101-00-W	D401-00-W	D801-00-W	D300-W
Working fluid	Compressed air			
Max. working pressure MPa	1.0 (≈150 psi, 10 bar)			
Proof pressure MPa	1.5 (≈220 psi, 15 bar)			
Number of branching ports	1			4
Port size Rc,NPT,G	1/8,1/4	1/4,3/8,1/2	3/4,1	1/4,3/8
Operating ambient temperature ℃	5 (41°F) to 60 (140°F)			
Weight (excluding joiner) kg	0.045	0.13	0.35	0.26

Option weight

* Add to the weight of the standard accessories. Unit: kg

Code	T type bracket				
	Blank	B11W	B31W	B41W	B81W
D101	0.011	0.024			
D401	0.036		0.086	0.094	
D801	0.094				0.17

Joiner weight is included when blank.

How to order

D101 - 00 - 6 ( ) - W - B11W

- Ⓐ Model No.
- (White type)
- Ⓑ Port size
- Ⓒ Port thread
- Ⓓ T type bracket

Code	Description
Ⓐ Model No.	
D101	For 1000 Series
D401	For 2000, 3000, 4000 Series
D801	For 6000, 8000 Series

Ⓑ Port size		D101	D401	D801
6	1/8	●		
8	1/4	●	●	
10	3/8		●	
15	1/2		●	
20	3/4			●
25	1			●

Ⓒ Port thread	
Blank	Rc thread
N	NPT thread
G	G thread

Ⓓ T type bracket				
Blank	None	●	●	●
B11W	For 1000 Ser	●		
B31W	For 2000 3000 Series		●	
B41W	For 4000 Ser		●	
B81W	For 6000 8000 Series			●

D300 - 8 ( ) - W - Q

- Distributor
- (White type)
- Ⓐ Port size
- Ⓑ Port thread
- Ⓒ Option

Code	Description
Ⓐ Port size	
8	1/4
10	3/8

Ⓑ Port thread	
Blank	Rc thread
N	NPT thread
G	G thread

Ⓒ Option	
Blank	None
Q	1/4 blanking plug 3/8 blanking plug, two of each attached

Precautions for model No. selection

*1: The joiner set (joiner, bolt, O-ring) and one gasket are enclosed as standard.
*2: Contact CKD regarding 2-way branch.
*3: D401-W can be connected to both 3000-W Series and 4000-W Series.

Precautions for model No. selection

*1: When using with C3000-W, C4000-W, the joiner set C4000-J400-W or T type bracket set B310-W/ B410-W shall be connected.
*2: The joiner set C4000-J400-W or T type bracket set should be ordered separately. (Refer to page 350)

Dimensions CAD

● D101-00-W

· Material: Polyamide resin

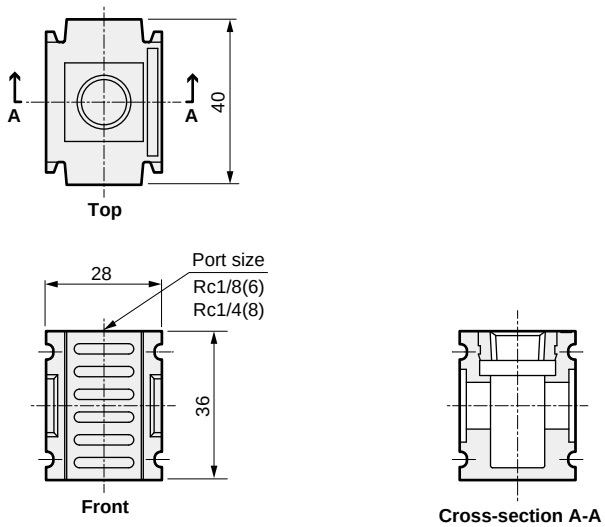

● D401-00-W

·Material: Aluminum alloy die-casting Painting

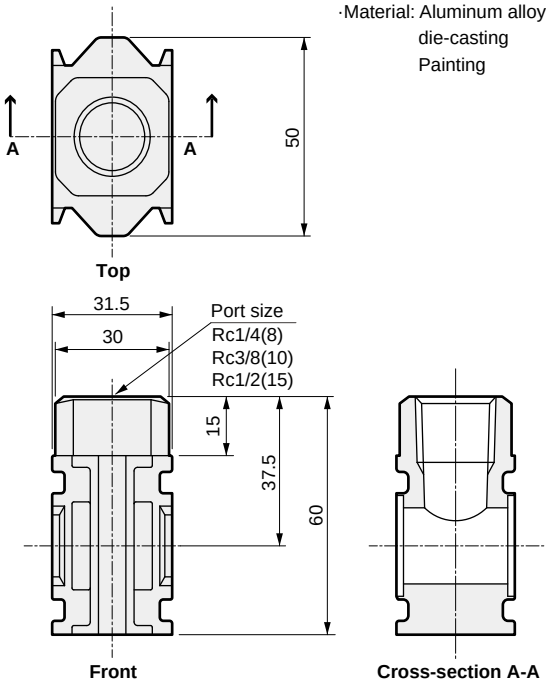

● D801-00-W

·Material: Aluminum alloy die-casting Painting

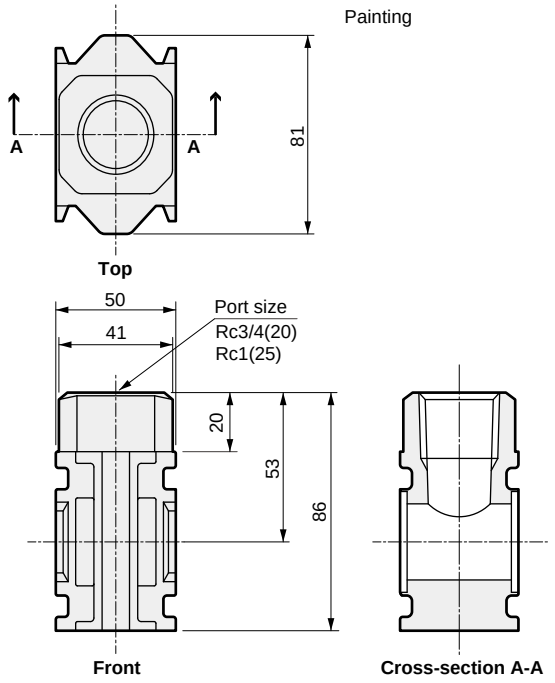

● D300-W

·Material: Aluminum alloy die-casting Painting

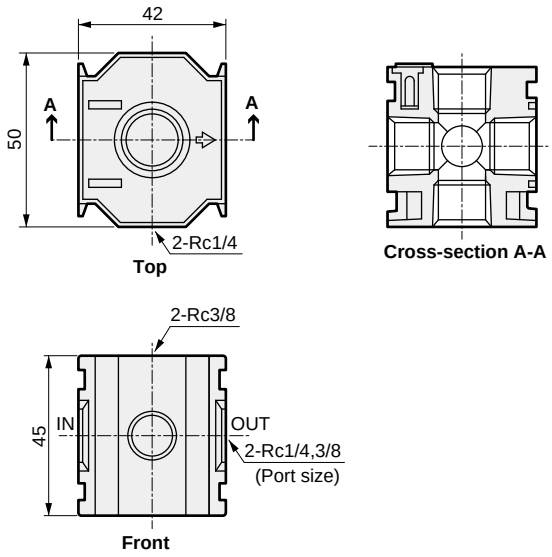

Assembly method (D101-00-W, D401-00-W, D801-00-W)

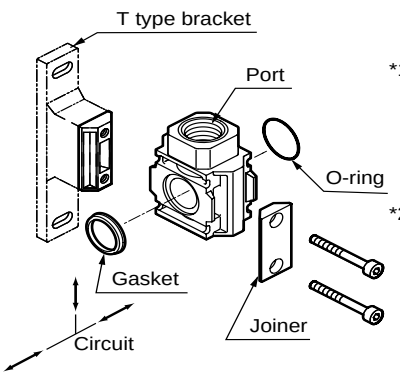

*1: Insert the O-ring when mounting on the primary side, and the gasket when mounting on the secondary side for the air flow.
*2: When inserting the O-ring and gasket during assembly, the O-ring and gasket must not be bent.

Usage example (D101-00-W, D401-00-W, D801-00-W)



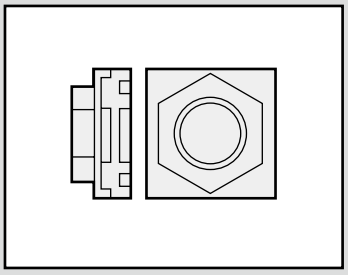

Pipe adaptor Standard White Series

A100/A400/A800-W Series

● Port size: 1/8 to 1

RoHS CAD

Dimensions and applications

Pipe adaptor set

● Model No.: A100-6, 8, 10-W
A400-8,10,15,20-W
A800-20,25,32-W

● Applications



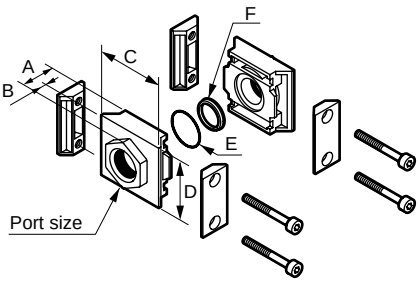

· Material: Aluminum alloy die-casting
Painting

Model No.	Port size	Compatible model	A	B	C	D	E (O-ring)	F (gasket)	Others	Wt. (kg)
A100-6*-W	1/8	1000 Series	21.5	13.5	40	36	JASO-2013 1 pc.	1 pc.	-	0.09
A100-8*-W	1/4									
A100-10*-W	3/8									
A400-8*-W	1/4	2000 3000 Series 4000 Series	20 (25) {34}	6 (11) {20}	50	45	JIS B 2401 P21 1 pc.	1 pc.	Numbers in ( ) are for 3/4 Numbers in { } are for 1	0.16
A400-10*-W	3/8									
A400-15*-W	1/2									
A400-20*-W	3/4									
A400-25*-W	1									0.28
A800-20*-W	3/4	6000 8000 Series	35 (38)	15 (18)	81	66	AS568-127 1 pc.	1 pc.	Numbers in ( ) are for 1 1/4.	0.53
A800-25*-W	1									
A800-32*-W	1 1/4									

*Blank: Rc thread, N: NPT thread, G: G thread

Pipe adaptor set with T type bracket

● Model No.: A100-6, 8, 10-W-B11W
A400-8,10,15-W-B31W
A400-8,10,15,20-W-B41W
A800-20,25,32-W-B81W
(with T type bracket set)

● Applications



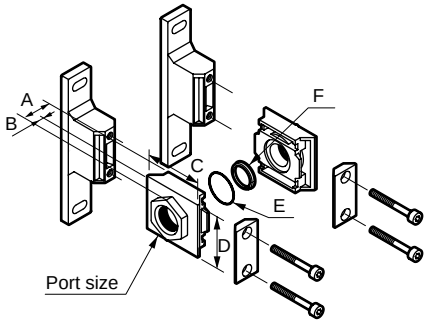

·Material: Aluminum alloy die-casting
Painting

Model No.	Port size	Compatible model	A	B	C	D	E (O-ring)	F (gasket)	Others	Wt. (kg)
A100-6*-W-B11W	1/8	1000 Series	21.5	13.5	40	36	JASO-2013 1 pc.	1 pc.	-	0.11
A100-8*-W-B11W	1/4									
A100-10*-W-B11W	3/8									
A400-8*-W-B31W	1/4	2000 3000 Series	20	6	50	45	JIS B 2401 P21 1 pc.	1 pc.	-	0.21
A400-10*-W-B31W	3/8									
A400-15*-W-B31W	1/2									
A400-8*-W-B41W	1/4	4000 Series	20 (25) {34}	6 (11) {20}	50	45	JIS B 2401 P21 1 pc.	1 pc.	Numbers in ( ) are for 3/4 Numbers in { } are for 1	0.21
A400-10*-W-B41W	3/8									
A400-15*-W-B41W	1/2									
A400-20*-W-B41W	3/4									
A400-25*-W-B41W	1									
A800-20*-W-B81W	3/4	6000 8000 Series	35 (38)	15 (18)	81	66	AS568-127 1 pc.	1 pc.	Numbers in ( ) are for 1 1/4.	0.61
A800-25*-W-B81W	1									
A800-32*-W-B81W	1 1/4									

*Blank: Rc thread, N: NPT thread, G: G thread

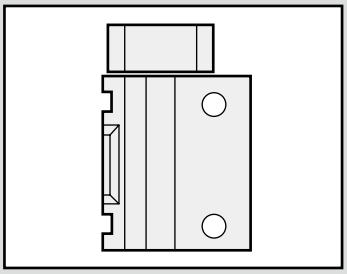

L type pipe adaptor Standard White Series

A101/A401/A801-W Series

● Port size: 1/8 to 1

CAD RoHS

Specifications

Item	A101-W	A401-W *1	A801-W
Working fluid	Compressed air		
Max. working pressure MPa	1.0 (≈150 psi, 10 bar)		
Proof pressure MPa	1.5 (≈220 psi, 15 bar)		
Port size Rc,NPT,G	1/8,1/4	1/4,3/8,1/2	3/4,1
Ambient/fluid temp °C	5 (41°F) to 60 (140°F)		
Weight (excluding joiner) kg	0.045	0.13	0.4

*1: A401-W can be connected to both 3000-W and 4000-W Series.

Option weight

* Add to the weight of the standard accessories. Unit: kg

Code	T type bracket				
	Blank	B11W	B31W	B41W	B81W
A101	0.011	0.024			
A401	0.036		0.086	0.094	
A801	0.094				0.169

Joiner weight is included when blank.

How to order

A101 - 6 ( ) - W - B11W

Ⓐ Model No. (White type) Ⓑ Port size Ⓒ Port thread Ⓓ T type bracket

Code		Description		
Ⓐ Model No.				
A101		L type pipe adaptor		
A401		L type pipe adaptor		
A801		L type pipe adaptor		
Ⓑ Port size				
		A101	A401	A801
6	1/8	●		
8	1/4	●	●	
10	3/8		●	
15	1/2		●	
20	3/4			●
25	1			●
Ⓒ Port thread				
Blank		Rc thread		
N		NPT thread		
G		G thread		
Ⓓ T type bracket *1				
Blank	None	●	●	●
B11W	For 1000 Series	●		
B31W	For 2000 Series For 3000 Series		●	
B41W	For 4000 Series		●	
B81W	For 6000 Series For 8000 Series			●

· Compatible model
· A101-6, 8-W .....1000-W Series
· A401-8, 10, 15-W .....2000, 3000, 4000-W Series
· A801-20, 25-W .....6000, 8000-W Series

⚠ Precautions for model No. selection

*1: The joiner set (joiner, bolt, O-ring) and one gasket are enclosed as standard.

Note: Refer to the following page for dimensions.

Pipe adaptor

Dimensions CAD

● A101-W

· Material: Polyamide resin

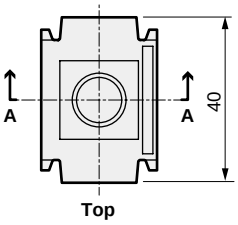

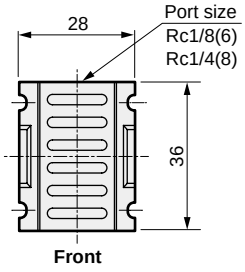

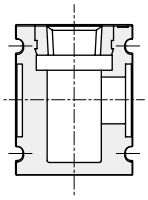

● A401-W

·Material: Aluminum alloy die-casting
Painting

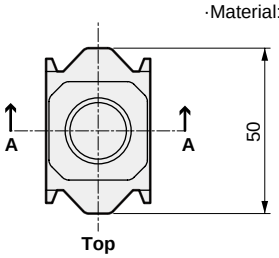

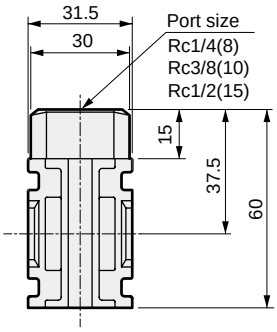

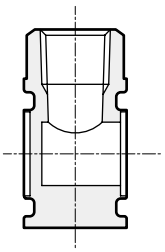

● A801-W

·Material: Aluminum alloy die-casting
Painting

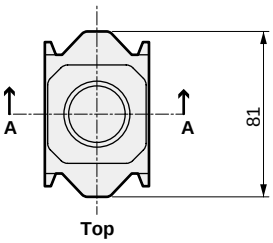

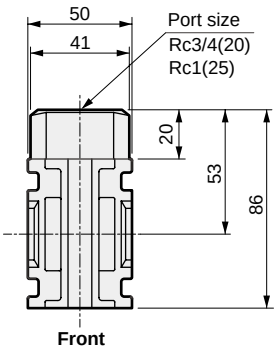

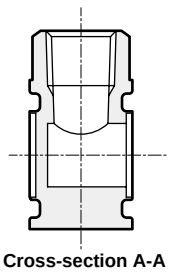

L type pipe adaptor

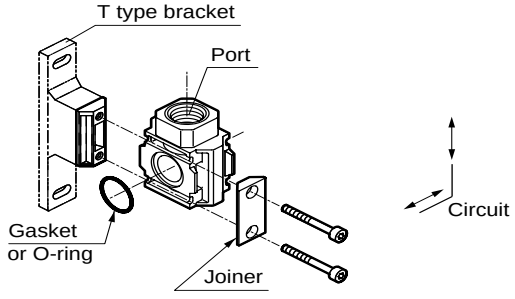

● Applications



Note: Insert the O-ring when mounting on the primary side for the air flow, and insert the gasket when mounting on the secondary side.

MEMO

Safety Precautions

Be sure to read this section before use.
Refer to Intro Page 63 for precautions for general pneumatic components.

Product-specific cautions: F.R.L. unit (modular design)

Design/selection

1. Common

⚠WARNING

■ This product is designed for industrial use. Do not use for medical purposes, or in any equipment or circuit that concerns human life.

■ Air filter, lubricator, drain separator plastic bowl, lubricator drip window, and pressure gauge lens. Material is polycarbonate. It cannot be used in environments containing synthetic oil, organic solvents, chemicals, coolant, screw locking agent, leak detection solutions, or hot water, etc., or where these substances may come in contact with the product.
Refer to page 361 for details on plastic bowl chemical resistance.

■ Piping load torque
Avoid applying piping load or torque to the body or pipes.

Series	1000-W	2000-W	3000-W	4000-W	6000-W	8000-W
Max. torque N·m	15	15	50	50	100	100

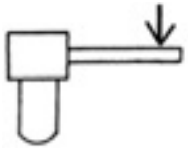

With the 1000-W Series in particular, application of a torque of 30 N·m or more on the piping is "hazardous" as the piping could be damaged. Use the product within the specified torque, even when using the pipe adaptor.

Avoid the manner of piping shown below.

Avoid piping fixed with a single support, as this can result in excessive force and lead to damage.
With the 1000-W Series in particular, application of a torque of 30 N·m or more on the piping is "hazardous" as the piping could be damaged. Use the product within the specified torque, even when using the pipe adaptor.

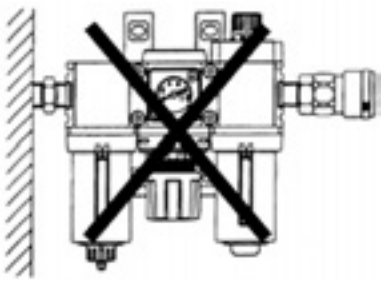

■ Each product has an O-ring groove for modular connection on its OUT side.
Select piping that can be sealed at or below the O-ring groove diameter.

Series	1000-W	2000-W	3000-W	4000-W	6000-W	8000-W
Groove diameter	ø17.6	ø25.4	ø25.4	ø25.4	ø41.2	ø41.2

⚠CAUTION

■ High moisture levels
Install the air dryer and drain separator before the air filter. If there is a lot of moisture from the compressor, hot and highly humid air could shorten the device's life or result in corrosion.

■ Dry air
Rubber parts for the regulator could deteriorate quickly, so use of a fluoro rubber valve assembly is recommended. Contact CKD when required.

■ Water-lubricated compressor circuit
Take measures to prevent chlorine-based substances from entering the compressed air.

■ Use the auto-drain under the working conditions below. Failure to observe this could result in operation faults.
NO auto-drain (exhaust when not pressurized): For "F" and "FF"
- Use a compressor with a capacity of 0.75 kW {90 ℓ/min. [ANR]} or more.
- Set the working pressure to 0.1 MPa or more. (Air is purged with initial drainage until pressure reaches 0.1 MPa.)

NC auto-drain (no exhaust when not pressurized): For "F1" and "FF1"
- A compressor with a capacity of 0.75 kw or less can also be used.
- Set the working pressure to 0.15 MPa or more.

For 1000 Series NC auto-drain
- Set the working flow rate to less than or equal to the max. working flow rate.
- Avoid use of this in places with high vibration, such as where a compressor is installed, because air could leak from the drain outlet when the float vibrates.
- Avoid drain overflow, which may lead to malfunctions.

2. Regulator, filter/regulator

⚠WARNING

■ Output pressure exceeding the regulator's set pressure could result in damage or faulty operation of the secondary side devices. Be sure to install a safety device.

■ The regulator cannot process residual pressure (release secondary pressure) when the primary pressure is released. Use a regulator with a check valve when residual pressure must be processed.

■ When using the regulator for secondary side sealed circuits or balance circuits contact CKD regarding these applications.

⚠CAUTION

■ Pulsation may occur depending on the working conditions or piping conditions.
Lower the primary pressure if pulsation occurs. Select the proper size as pulsation can occur easily if the flow rate is extremely small in respect to the max. flow rate.

⚠CAUTION

■ The setting range for the regulator's secondary side pressure should be within 85% of that of the primary side. Otherwise, the pressure drop may increase.

■ When using regulators in parallel as below, do not use the OUT side as a closed circuit. If a closed circuit is required, install a check valve on the OUT side of each regulator.

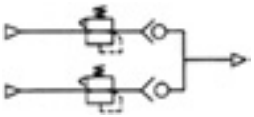

3. Lubricator

⚠WARNING

■ Do not use as lubrication for air motor or bearings. Lubrication may not be possible when used very frequently, such as in a press machine.

⚠CAUTION

■ If the working air quantity is low for the lubricator, oil may not drip.
Check the min. air quantity required for dripping oil.

4. Pressure switch

⚠CAUTION

■ When using a pressure switch PPR or digital pressure sensor PPX, avoid using it together with the lubricator. The switch is not a drip-proof structure, so operation could be disabled if the lubrication oil comes in contact with it.

5. Residual pressure exhaust valve

⚠WARNING

■ Precautions for the residual pressure exhaust valve
- The EXH port is dedicated for installation of the silencer. Tighten with a torque of 3 N·m or less (manual tightening). Do not connect pipes where their loads or torque, etc., may be applied to the EXH port.
- If exhaust operations are incomplete due to air quality, manually discharge air by operating the knob (turn and raise).

6. Pressure gauge

⚠CAUTION

■ When using this unit for high volume air blowing, etc., install a pressure gauge as shown below so that the secondary pressure is measured accurately.

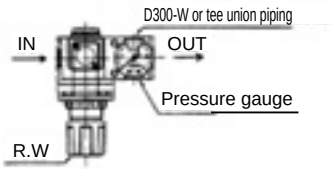

■ G45D
- The chemical resistance of the lens is shown below.
- Avoid using products in an atmosphere where chemicals are contained in compressed air or atmosphere, or where they could adhere to parts.
- Use in the above state could lead to lens damage.

Chemical resistance of lens

Chemicals	Chem categ	Main products of chemicals	General applications	Lens
Inorganic chemicals	Acids	Hydrochloric acid, sulfuric acid, hydrofluoric acid, phosphoric acid, chromic acid, etc.	Acid metal wash, acid degreasing soln, coating treatment soln, etc.	×
Organic chemicals	Aromatic hydrocarbons	Benzene, toluene, xylene, ethyl benzene, styrene, etc.	Contained in paint thinner (benzene, toluene, and xylene)	×
	Alcohols	Methyl alcohol, ethyl alcohol, cyclohexanol, benzyl alcohol	Used as antifreezing agent Leakage detection agent	×
	Phenol	Carbolic acid, cresol, naphthol, etc.	Disinfectant solution	×
	Ketones	Acetone, methyl ethyl ketone, cyclohexanone, acetophenone, etc.		×
	Carboxylic acids	Formic acid, acetic acid, butyl acid, acrylic acid, oxalic acid, phthalic acid, etc.	Dyes/oxalic acid for aluminum processing, phthalic acid for paint base and leakage detection agents	×
	Oxyacids	Glycol acid, lactic acid, malic acid, citric acid, tartaric acid		×
	Amines	Methylamine, dimethylamine, ethylamine, aniline, acetanilide, etc.	Additive of brake oil	×

×: Not available (Lens will break.)

7. Flame-resistant Series

⚠WARNING

■ The regulator's diaphragm, check valve resin parts (inside aluminum plate), and silencer element are not made of flame-resistant materials. Avoid use where spatter could accumulate.

8. Oil-prohibited Series

⚠CAUTION

■ Check the working circuit and working fluid.
Circulating fluids containing solids or non-specified fluids could cause malfunctions. Connect a filter to the product's primary side so that solid matter does not enter.

■ Pulsation may occur depending on the usage conditions and piping conditions.
Lower the primary pressure if pulsation occurs.
Select the proper size as pulsation can occur easily if the flow rate is extremely small in respect to the max. flow rate.

■ Contact CKD if material restrictions apply (copper-based, silicon-based, halogen-based materials not permissible (fluorine, chlorine, oxalic based)).
An oxalic-acid-based cleaning agent is used to clean parts in some cases.

■ If low-dust generation and cleanliness higher than the oil-prohibited regulator are required, use the clean regulator RC2000 Series.

F.R.L. unit (modular design)

Design/selection

⚠ CAUTION

■ Pressure and flow characteristics and relief start pressure may be less than the standard regulator (R3000 Series, etc.).
Depending on use, such as when back pressure rises, the set pressure may increase 0.2 MPa. It is recommended to use a pressure gauge compatible with a set pressure of +0.2 MPa.

■ Set the primary pressure to 0.1 MPa or higher than the set pressure. Pressure adjustment faults or leaks from the relief valve could result depending on use.

■ When used in applications where the primary pressure is 0.7 MPa or more, keep the difference in primary and set pressure within 0.4 MPa.
Pulsation could occur if the difference in pressures is large or if secondary piping is large. If so, lower primary side pressure or restrict the secondary line. If pulsation continues, contact CKD.

■ When the primary pressure is released, the secondary pressure flows to the primary side.
If a problem occurs in another device due to the inflow of secondary-side fluid to the primary side, provide a circuit to retain the pressure. When the product is left with the primary pressure released for long periods, return the set pressure to 0. Pulsation could occur if the bottom rubber is deformed.

9. Outdoor Series

⚠ WARNING

■ This product has outdoor specifications, but should not be used in the following environments.
- · When the ambient temperature and product temperature exceed the range of -10 to 60 °C. (The product temperature is at risk of exceeding the ambient temperature when exposed to direct sunlight.)
- · Where air freezes.
- · In atmospheres containing corrosive gases, liquids and chemicals.
- · Locations with vibration or impact.

Mounting, installation and adjustment

1. Common

⚠ CAUTION

■ Avoid installing this product where it is subject to direct ultraviolet.

■ Flush and clean the pipes.
Dirt or foreign matter remaining in the piping will deteriorate product performance.

■ Make sure that no foreign matter enters the pipes when connecting the pipes and fittings.
When screwing in piping or fittings, check that swarf from port threads or sealant does not get inside. Dirt or foreign matter remaining in the piping will deteriorate product performance.

■ To use F.R.L. correctly
1. Set the regulator pressure setting upward. After setting the pressure, lock the handle. Check the primary pressure carefully before setting pressure.
2. Confirm the direction of the arrow indicating the air inlet before connecting. A reverse connection could result in improper operation.
3. Install the air filter and the lubricator case downward vertically. Drainage may be defective or drip check may become impossible.
4. Use of the auto-drain where vibration is present could cause faults and malfunctions.

■ Drain piping of the auto-drain should be piped under the following conditions.
Otherwise, malfunctions may result.
Use an inner diameter of ø5.7 or more and piping of 5 m or more for the drain discharge section. Do not route it vertically.
Pipe so that no lateral load is applied on the bowl.
When you tighten a fitting into an Rc1/4 female thread, hold the hexagon part of the cock.

■ Piping screw-in torque
Make sure that excessive torque is not applied on the body and piping when piping.

Series	1000-W	2000-W	3000-W	4000-W	6000-W	8000-W
Max. torque N·m	15	30	30	30	70	70

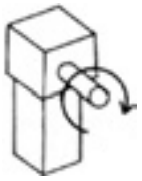

■ Drain piping
- ● The drain piping for the plastic bowl has a barbed nipple, and can be directly installed. However, confirm that the drain cock is closed before inserting the tube.
Pipe so that no lateral load is applied on the bowl.
Do not fix the tube connected to the drain outlet with a lateral load applied. If drainage is performed with a lateral load applied, external leakage may occur.
Contact CKD when attaching a separate valve to the tube tip that is inserted to the drain outlet to control drainage.

■ Tightening torque of drain cock
- ● The maximum tightening torque of the drain cock of the bowl is as follows.
  - · 1000 Series: 0.1 N·m
  - · Others: 0.5 N·m

■ Drain piping of metal bowl with auto-drain

· When you tighten a fitting into the drain outlet female thread, hold the hexagon part of the cock. When using the metal bowl with auto-drain, if the drain is piped with a tightening fitting, manual operation is not possible.

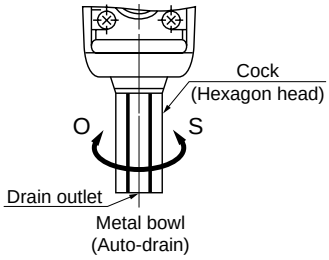

■ Piping units with pressure detection port

F6000-□-W-Q/M6000-□-W-Q
MX6000-□-W-Q/F8000-□-W-Q
For M8000-□-W-Q/MX8000-□-W-Q

A pressure detection port is available as an option for F6000-W, M6000-W, MX6000-W, F8000-W, M8000-W, and MX8000-W.

The life of the filter element or oil mist filter mantle assembly is visually checked by assembling the differential pressure gauge GA400-8-P02 into the pressure detection port.

When selecting option Q and X1 simultaneously for F6000-W and M6000-W and mounting differential pressure gauge GA400, raise the gauge with piping material so that it does not interfere.

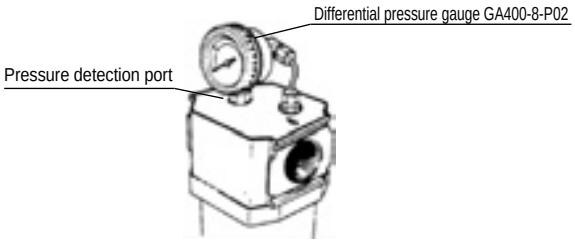

Check the port position of the differential pressure gauge, the high pressure side, and low pressure side, and mount properly.

2. Regulator, filter/regulator

⚠CAUTION

■ Regulator, filter/regulator

- Lightly tighten (0.6 N·m or less) mounting screws for embedded pressure gauge G401-OP, G401, and gauge plug.
- When installing the pressure gauge with a safety mark on the gauge plug, or when installing a general screw-in pressure gauge, tighten with a torque of 10 to 15 N·m or less.
- Do not move or swing the product by the adjustment knob on the regulator.
- Check that pressure exceeding the pressure gauge's full scale is not applied. The pressure gauge could be damaged. (Pay special attention when using the full scale 0.2 or 0.4 MPa pressure gauge.)

■ Panel mount of regulator

When mounting the panel and L type bracket, the knob must be removed.

(The knob does not need to be removed for the 2000 Series. Panel mount is not available for the 8000 Series.)

When removing the knob, turn it about 3 times in the H direction, then remove the knob by turning the nut as you would for a jack-up.

Turning the knob in the L direction from the set pressure 0 activates the stopper and the knob does not turn.

If torque is additionally applied in the L direction, the knob may lock and become inoperable.

To keep the knob from locking, be sure to turn the knob in the H direction three times before turning the nut. At this time, do not turn the knob together.

Note that the knob may suddenly pop out when jacked up by the nut.

At this point, insert the cover into the panel or L type bracket, and secure it with the nut.

Finally, insert the knob and tap it to snap in.

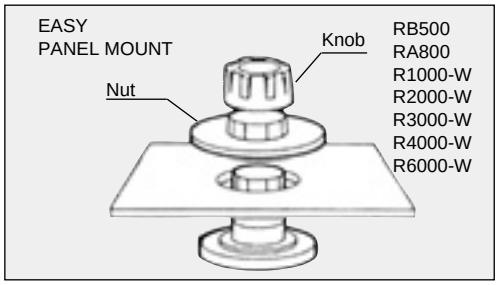

Note: Install the nut before installing the knob. (The nut of R2000-W can be removed without removing the knob.)

3. Lubricator

⚠CAUTION

■ Adjustment of the lubricator oil drip

- Adjust the oil rate by turning the adjusting dome with bare hands. For closing, tighten with a torque of 0.5 N·m or less. The numbers (scale) on the dial are a guide used after adjustment, and do not indicate the oil drip rate.

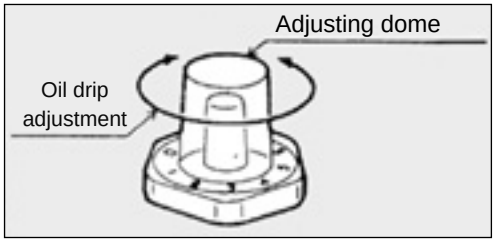

Mounting, installation and adjustment

4. Pressure switch

⚠CAUTION

■ Mounting of pressure switch (PPR)

● Insert the O-ring into the adaptor
  * Insert the O-ring into the 2 O-ring grooves
    Handle the O-rings with clean hands

● Mount the adaptor onto the body
  Mount the adaptor with the included 2 bolts (M3)
  * Be careful of the mounting location and direction so that the O-ring will not fall off.
  * Do not screw in one of the bolts completely, but to screw in both bolts as evenly as possible. (Tightening torque 0.5±0.1N·m)

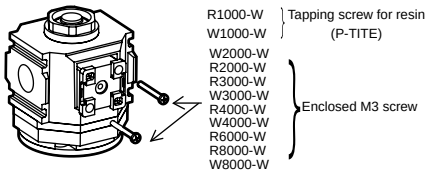

● Mount the main unit, and then attach the included pin on the face on the adaptor side.

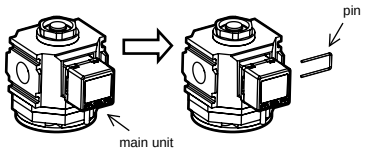

Note) Insert the pin all the way to the end. Also, confirm that the pin has been attached before pressurization.

5. Pressure gauge

⚠CAUTION

■ Pressure gauge
Repeated and sudden increase and decrease in pressure and pressure pulsation must be avoided because it could adversely affect the life of the pressure gauge. Either ease the pressure fluctuation in the circuit or contact CKD so that a pressure gauge with a cushioning screw can be prepared. Pressure exceeding the pressure range may damage the gauge.

■ Mount vertically in respect to the ground so that the scale can be viewed straightforward. (See below) Mounting in any other direction can cause the needle movement to become unstable, and can cause the accuracy to drop.

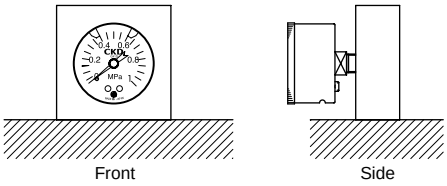

6. Flame-resistant Series

⚠CAUTION

■ When installing a general screw-in pressure gauge on the gauge plug, tighten with a torque of 3 to 5 N·m or less.

Use/maintenance

1. Common

⚠WARNING

■ Perform a periodic inspection once every six months or less to check for any cracks, scratches, and other damages of the air filter and plastic bowl of the lubricator.
Replace the bowl with a new plastic or metal one if you find any damage.

■ Check the air filter, lubricator plastic bowl, and lubricator drip window periodically for contamination.

● If parts are heavily contaminated or if transparency has decreased, replace with a new bowl or drip window.

● Use water and household detergent to wash parts. Rinse them out well with clean water afterward.

■ Removing bowl of filter and lubricator
Stop the compressed air supply. Release the pressure in the bowls completely and make sure that there is no residual pressure before removing the bowls.

⚠CAUTION

■ Check the oil drip rate once a day.
If the oil drip is faulty, problems could occur in the unit being lubricated.

■ Do not use a distributor to separate the air with oil mist and the air without oil mist. Oil in the lubricator may flow backward.

■ As a clogged filter element may cause degradation of the performance, perform periodical inspection and replacement of the element.

■ Do not disassemble or modify the product.

■ Read the instructions and precautions enclosed with the product before use or maintenance.

Drainage method

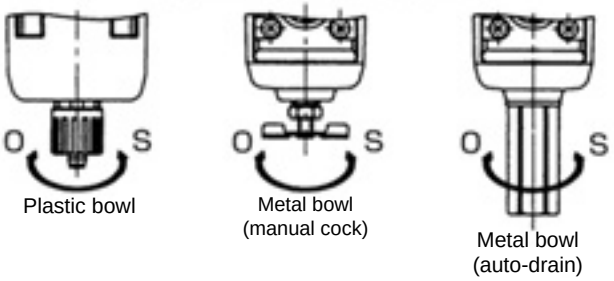

- Drainage starts when the cock is turned in the O direction, and the discharge stops when the cock is turned in the S direction. Tighten by hand in the S direction.
- When auto-drain is available, drainage is discharged automatically when it accumulates. Drainage can also be discharged manually.

Removing the resin bowl

2000-W, 2500-W, 3000-W, 4000-W, 6000-W, 8000-W Series

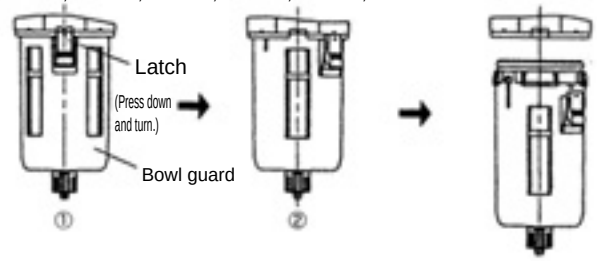

1000-W Series

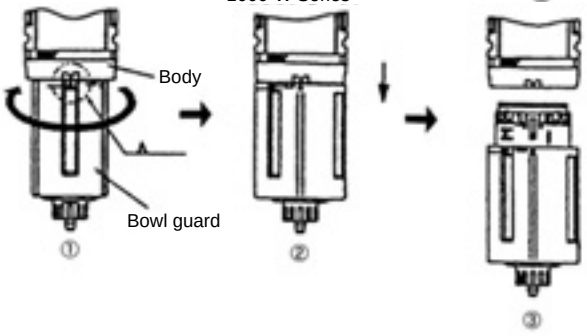

Removing the metal bowl

2000-W, 3000-W, 4000-W, 6000-W, 8000-W Series

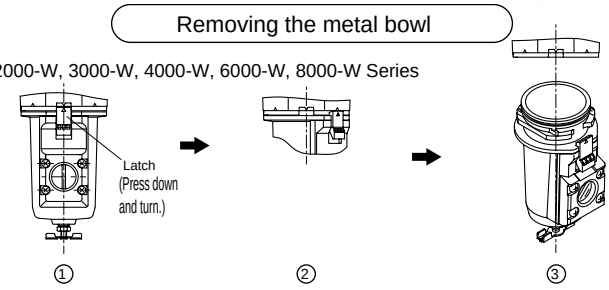

Removing the filling plug

3000-W, 4000-W, 8000-W Series 1000-W Series

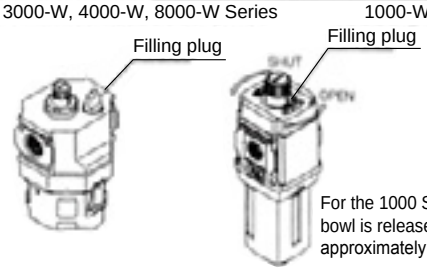

For the 1000 Series, pressure in the bowl is released by sliding the filling plug approximately 45° to the OPEN side.

- Close the filling plug after lubricating.
- Never remove the bowl without removing the filling plug (while the bowl is pressurized). (L3000-W to L8000-W)
- For the 1000 Series, never remove the bowl with the filling plug at the SHUT side (while the bowl is pressurized). (L1000-W)

2. Filter/regulator

⚠ CAUTION

■ Elements of W1000-W to W8000-W
Inspect the valve assembly when it is removed during maintenance.
Do not lose springs, etc., during maintenance.

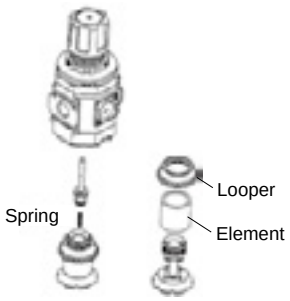

3. Filter

⚠ WARNING

■ Drain so that air filter moisture does not accumulate beyond the upper limit.
Components could malfunction if moisture flows into the secondary side.

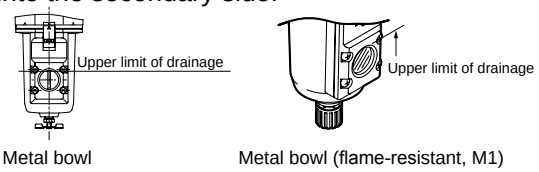

- The resin bowl must not be filled above the "upper drain limit" or "MAX LEVEL" markings stamped on the bowl guard.
- Ensure that large amounts of drainage do not flow directly from the piping. Install a drain discharger if there is a large amount of direct drainage.

⚠ CAUTION

■ Submicron 0.3 µm element
This filter cannot be flushed with air, water, etc., and be reused. When the pressure drops to 0.07 MPa, replace the element with a new one. (excluding 1000 and 2000 Series)

■ Oil mist filter
The mantle (element) life ends after one year (6000 hours) or when pressure drops to 0.1 MPa. (Excluding the X type) Replace the mantle with a new one at the end of its life. (Do not touch the urethane foam layer when replacing the mantle.)

■ If a differential pressure indicator is provided, replace the mantle (element) before the differential pressure indicator's color changes completely to red.

4. Regulator, filter/regulator

⚠ CAUTION

■ Pull the pressure adjustment knob and release the lock before setting the regulator pressure. The regulator could be damaged if the pressure is set without unlocking it.

Use/maintenance

■ Pull the pressure adjustment knob and release the lock before setting the regulator pressure. The regulator could be damaged if the pressure is set without unlocking it.

■ Turning the knob in the L direction from set pressure 0 activates the stopper, and the knob will not turn. Note that if torque is forcibly applied in the L direction, the knob may lock and become inoperable.

■ Pulsation may occur depending on the usage and piping conditions.If pulsation occurs, the working conditions or piping conditions should be changed, such as by lowering the primary pressure.

■ When the regulator is left with the primary pressure released for long periods, return the set pressure to 0. External leakage may occur due to valve sticking.

■ The facilities pressure changes from the initial setting due to the working environment and conditions, as well as aging of part materials. Check the pressure regularly, and reset if conditions have changed.
Recompressing after discharging the primary pressure from the pressurized setting using the regulator and filter regulator may cause relief leakage.
In this case, stop the supply air pressure, discharge, turn the pressure-adjusting knob in the step-down direction, and then supply the primary pressure. Then readjust the secondary pressure by turning the pressure regulator knob in the step-up direction.

5. Lubricator

⚠WARNING

■ Use Class 1 turbine oil (no additives) ISO VG32 for the lubricator.
Other oils could cause breakage or improper operation.

■ Removing lubricator filling plug
To prevent the filling plug from popping out, loosen the filling plug by one turn, and then completely depressurize the bowl before removing the filling plug.
Wipe away any dirt around the filling plug that could scatter.

⚠CAUTION

■ Periodically replenish oil in the lubricator bowl so that it does not drop below the lower limit.

■ When lubricating the L1000-W, pressure in the bowl is released by turning the filling plug. Refer to the section of Warnings Use and maintenance above for details on using the filling plug. (Lubrication is done while pipes are pressurized.)
Check that there is no pressure in the bowl, remove the bowl and bowl guard, and then directly lubricate to the bowl.
Refer to the previous page for details on removing the bowl.

■ When lubricating the L3000-W to L8000-W, loosen the filling plug slightly to release pressure in the bowl, and then remove the filling plug. Refer to Warnings Use and maintenance on the previous page for details on using the filling plug.
(Removing the filling plug enables lubrication to be done while pipes are pressurized.)
Relubrication can also be done through the filling plug hole. The bowl can also be directly lubricated by removing the bowl and the bowl guard.
Refer to the previous page for details on removing the bowl.
With L8000, oil is supplied to the spacer by lubricating from the filling plug hole.

6. Pressure gauge

■ Make sure that impact and vibration are not applied directly to the body.

■ Leave a clearance of two scale marks or more between limit markers.
Attempting to apply force at two scale marks or lower may lead to deformation or damage.

7. Oil-prohibited Series

⚠CAUTION

■ Before conducting maintenance, stop fluid supply and make sure that there is no residual pressure.

■ Storage
Do not store this product in a hot, humid atmosphere or atmospheric conditions outside of the specified range for a prolonged period of time. Resin or rubber parts could deteriorate, and the resin bowl could become discolored. Contact CKD when storing products exceeding specifications.

■ Release the lock before adjusting the pressure.
Forcibly turning a locked pressure adjustment knob could cause damage.

■ Adjust pressure in the direction of the pressure increase.
The correct pressure cannot be set if pressure is adjusted downward.

■ For non-relief, pressure reduction is not possible without consumption on the secondary side.

8. Outdoor Series

⚠WARNING

■ Do not disassemble the cover of the filter/regulator or regulator.

⚠CAUTION

■ Except when adjusting the pressure, tighten the hex nut and secure the adjusting screw.(Use without tightening may lead to damage.)

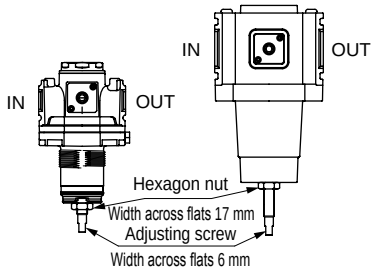

- Do not apply a load to the product outside the parameters of use. (Do not climb/step onto the product.)
- Using the regulator with the cover facing downward may cause the pressure regulation to fail due to freezing. Be especially careful in low-temperature environments.
- The set pressure changes from the initial set point due to the working environment and conditions, as well as aging of part materials. Check the pressure regularly, and reset if conditions have changed.
- Perform regular maintenance every six months to one year.
- Consumable parts (metal bowl assembly, valve assembly, bottom spring, element, mantle assembly and O-ring) must be replaced every other year. Contact a CKD sales representative for details regarding consumable parts.
- When the set pressure is high, the operating force for rotating the adjusting screw (knob) will increase.
- Use only compressed air. Air containing corrosive gases, fluids or chemicals could result in improper pressure adjustment due to body damage or rubber deterioration.
- This product guarantees outdoor use, but not corrosion resistance (no rust or discoloration).
- Turning the knob in the L direction from set pressure 0 activates the stopper, and the knob will not turn. Note that if torque is forcibly applied in the L direction, the knob may lock and become inoperable.

- Fix the hex side of the adapter nut before screwing the fitting, etc., into the drain outlet of the metal bowl with auto-drain. If the the hex side of the adapter nut is not fixed, the product may break due to excessive screw-in of the adapter nut. When using the metal bowl with auto-drain, if the drain is piped with a tightening fitting, manual operation is not possible.

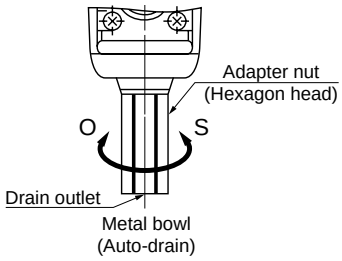

- Piston drain uses automatic discharge for intermittent flow. Drainage is not discharged under working conditions where air flows constantly.

Chemical resistance of plastic

⚠WARNING

- The chemical resistance of plastic parts is shown below.
- Avoid using products where the compressed air or atmosphere contains chemicals, or where they could adhere to parts.
- Use in the above state could lead to bowl damage and accidents.
- Avoid using with these types of chemicals or in an atmosphere containing these chemicals.
- A metal bowl is available if these chemicals must be used.

Chemical resistance of plastic bowl/body

Use a metal bowl in an atmosphere containing the following chemicals.
Check whether the testing solutions, sealants and adhesives contain the following chemicals.

Types of chemicals	Categories of chemicals	Main products of chemicals	General applications	Polycarbonate bowl	Nylon Bowl	Nylon Body
Inorganic chemicals	Acids	Hydrochloric acid, sulfuric acid, hydrofluoric acid, phosphoric acid, chromic acid, etc.	Acid washing of metals, acidic degreasing / coating treatment solutions, etc.	×	×	×
	Alkalines	Caustic soda, caustic potash, calcium hydroxide, aqueous ammonia, alkalis such as sodium carbonate	Alkaline degreasing solution for metals Soluble coolant, leakage detection agent	×	○	○
	Inorganic salts	Sodium sulfide, sodium nitrate, potassium bichromate, sulfate of soda, etc.		×	○	○
Organic chemicals	Aromatic hydrocarbons	Benzene, toluene, xylene, ethyl benzene, styrene, etc.	Contained in paint thinner (benzene, toluene, and xylene)	×	×	×
	Chlorinated aliphatic hydrocarbons	Methyl chloride, ethylene chloride, methylene chloride, acetylene chloride, chloroform, trichlene, perchlene, carbon tetrachloride	Organic solvent-based washing solution for metals (trichlene, perchlene, carbon tetrachloride, etc.)	×	○	○
	Chlorinated aromatic hydrocarbons	Chlorobenzene, dichlorobenzene, benzene hexachloride (B/H/C), etc.	Agricultural chemicals	×	○	○
	Petroleum components	Solvent naphtha, gasoline, kerosene		×	○	○
	Alcohols	Methyl alcohol, ethyl alcohol, cyclohexanol, benzyl alcohol	Used as antifreezing agent Leakage detection agent	×	×	×
	Phenol	Carbolic acid, cresol, naphthol, etc.	Disinfectant solution	×	×	×
	Ethers	Methyl ether, methyl ethyl ether, ethyl ether	Additive of brake oil	×	○	○
	Ketones	Acetone, methyl ethyl ketone, cyclohexanone, acetophenone, etc.		×	×	×
	Carboxylic acids	Formic acid, acetic acid, butyl acid, acrylic acid, oxalic acid, phthalic acid, etc.	Dyes; oxalic acid for aluminum processing; phthalic acid for paint base Used as leakage detection agent	×	×	×
	Esters	Dimethyl phthalate (DMP)/diethyl phthalate (DEP)/ Dibutyl phthalate (DBP), dioctyl phthalate (DOP)	Lubricant, synthetic oil, rust preventing agent additives Used as plasticizer for synthetic resin	×	○	○
	Oxyacids	Glycol acid, lactic acid, malic acid, citric acid, tartaric acid		×	×	×
	Nitro compounds	Nitromethane, nitroethane, nitroethylene, nitrobenzene, etc.		×	○	○
	Amines	Methylamine, dimethylamine, ethylamine, aniline, acetanilide, etc.	Additive of brake oil	×	×	×
	Nitriles	Acetonitrile, acrylonitrile, benzonitrile, acetoisonitrile, etc.	Raw material for nitrile rubber	×	○	○

○: Resistant, ×: Non-resistant (plastic will become damaged.)

Related products

Pressure gauge/display

■ **F.R.L units**



CONTENTS

Pressure gauge

- Pressure gauge assembly (G401-W) 364
- With safety marker (G40D) 365
- With limit marker (G45D) 366
- General purpose (G49D, G59D) 367
- General purpose clean-room (G49D-P9*, G59D-P9*) 368
- Outdoor Series (GW49D) 369
- Pressure gauge for panel mounting (G53D) 370
- Pressure gauge with switch (G52D) 372
- Miniature (G29D) 374
- Compact round (G39D) 375
- Vacuum pressure gauge (VG41D) 376
- Differential pressure gauge (GA400-8-P02) 378

Display

- Moisture indicator (6119) 379

⚠ Safety precautions 380

⚠ Pressure gauges

Repeated sudden increases and decreases in pressure and pressure pulsation must be avoided as they could adversely affect pressure gauge life. Either ease the pressure fluctuation in the circuit or contact CKD so that a pressure gauge with a cushioning screw can be prepared.

⚠ Refer to Intro Page 63 for general precautions regarding pneumatic components and refer to "⚠Safety precautions" for detailed precautions for individual series.

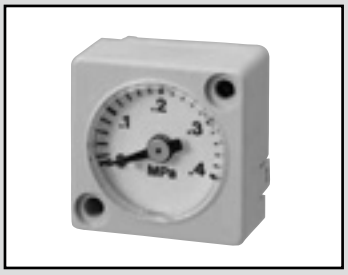

Low-profile pressure gauge

G401-W Series

Thin, compact design ideal for incorporating devices.
Ideal for filter regulator, regulator, and pressure switch (P4000-W).

● Connection: O-ring sealant, set screw

JIS symbol

RoHS

Specifications

Item		G401-W
Working fluid		Compressed air
Fluid temperature °C		5 (41°F) to 60 (140°F)
Ambient temperature °C		5 (41°F) to 60 (140°F)
Accuracy *1		Full scale ±3%
Shape		Square, fixed with screw
Display size		ø26
Material	Housing	PBT resin
	Lens	Polycarbonate resin
Pressure range MPa		0 (≈0 psi, 0 bar) to 0.4 (≈58 psi, 4 bar) 0 (≈0 psi, 0 bar) to 1.0 (≈150 psi, 10 bar)
Connection		O-ring sealant, screw-lock
Weight g		11

*1: The guaranteed indicator accuracy temperature is 20±15°C.

How to order

G401 - W - 0P - P04

(White series)

Ⓐ Connection method

Ⓑ Pressure display

Code	Description
Ⓐ Connection method	
Blank	Mounting screw for metal (nominal 3 tapping screw) (2000 to 8000 series equipped as standard)
OP	Mounting screw for resin (nominal 3 tapping screw) (1000 series equipped as standard)
Ⓑ Pressure display [MPa]	
P04	0 to 0.4 MPa
P10	0 to 1.0 MPa

Dimensions and parts materials

● G401

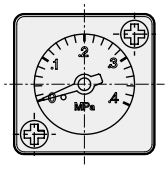

Pressure display: P04

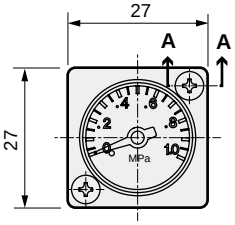

Pressure display: P10

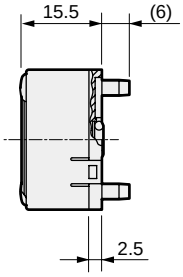

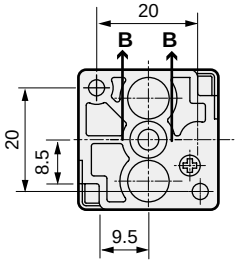

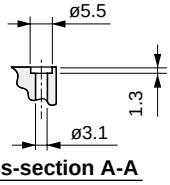

Cross-section A-A



Cross section B-B

Part name	Material
Bourdon tube	Phosphor bronze
Case	PBT resin
Lens	Polycarbonate resin

● Pressure gauge assembly

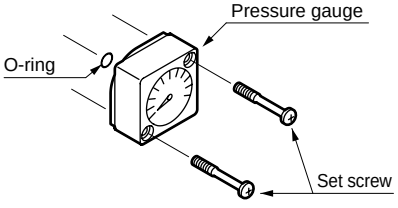

* Tighten the set screw at 0.6 N·m or less.

Applications





Pressure gauge with safety mark

G40D Series

Easy visual inspection control due to green and red zone display.

● Port size: R1/8, R1/4

JIS symbol 

RoHS CAD

Specifications

1 MPa = 10 bar

Item	G40D	
	P10	P04
Working fluid	Compressed air	
Full scale MPa	1.0 (≈150 psi, 10 bar)	0.4 (≈58 psi, 4 bar)
Safety marker setting range MPa	0.15 (≈22 psi) to 1.0 (≈150 psi)	0.06 (≈8.7 psi) to 0.4 (≈58 psi)
Max. setting width MPa	0.45 (≈65 psi, 4.5 bar)	0.18 (≈26 psi, 1.8 bar)
Ambient temperature °C	5 (41°F) to 60 (140°F)	
Fluid temperature °C	5 (41°F) to 60 (140°F)	
Port size R	1/8,1/4	
Accuracy *1	Full scale ±3%	
Weight g	85	

*1: The guaranteed indicator accuracy temperature is 20±15°C.

Specifications for rechargeable battery

(Catalog No. CC-1226A)

● Design compatible with rechargeable battery manufacturing process

G40D-.....- **P4**

How to order

G40D - **8** - **P10**

Ⓐ Model No.

Ⓑ Port size

Ⓒ Pressure display

Code	Description
Ⓐ Model No.	
G40D	Pressure gauge with safety mark
Ⓑ Port size	
6	R1/8
8	R1/4
Ⓒ Pressure display	
P10	For 0 to 1.0 MPa
P04	For 0 to 0.4 MPa
P02	For 0 to 0.2 MPa

Precautions for model No. selection

* Designate R1/4 when mounting on F.R.L. Series.

Dimensions and materials CAD

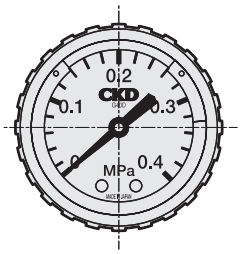

Pressure display: P04

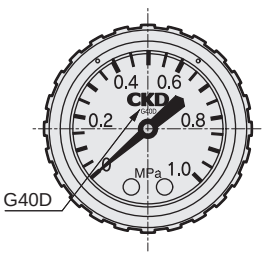

Pressure display: P10

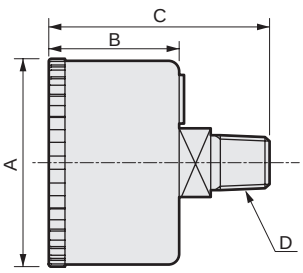

Part name	Material
Bourdon tube/stock	Copper alloy
Housing	Steel plate + paint
Lens	Polyamide resin
Marker	PBT resin

Model No.	A	B	C	D
G40D-6	ø42.5	26.5	44	R1/8
G40D-8			46	R1/4

How to adjust pressure range

When removing the transparent face

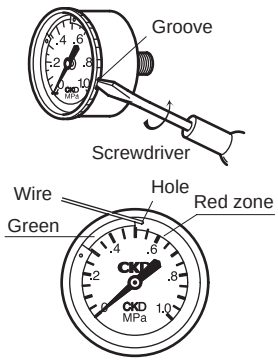

Remove the transparent face and insert a needle into the hole in the red zone to move the red zone marker.
After adjustment, always reattach the transparent face before supplying pneumatic pressure.

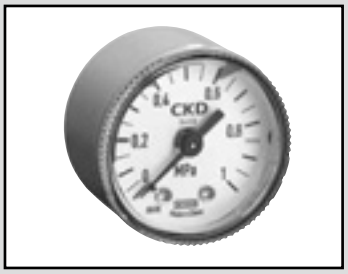

Pressure gauge with limit marker

G45D Series

Easy visual inspection management thanks to the green arrow.

● Port size: R1/8, R1/4

JIS symbol 

RoHS CAD

Specifications

Item		G45D
Working fluid		Compressed air
Fluid temperature °C		5 (41°F) to 60 (140°F)
Ambient temperature °C		5 (41°F) to 60 (140°F)
Accuracy *1		JIS2.5 grade or equivalent
Shape		DT type (rear side screw/stock section square)
Display size		ø39
Material	Stock/Bourdon tube	Copper alloy
	Housing	Steel plate + paint (white)
	Lens	Polyamide resin
	Marker	Polyacetal resin
Pressure range (Setting range) MPa		0 (≈0 psi, 0 bar) to 0.2 (≈29 psi, 2 bar) 0 (≈0 psi, 0 bar) to 0.4 (≈58 psi, 4 bar) 0 (≈0 psi, 0 bar) to 1.0 (≈150 psi, 10 bar)
Port size		R1/8,1/4
Weight g		74

*1: The guaranteed indicator accuracy temperature is 20±15°C.

How to order

G45D - 6 - P04

Ⓐ Model No.
Ⓑ Port size
Ⓒ Pressure display

Code	Description
Ⓐ Model No.	
G45D	Pressure gauge with limit marker
Ⓑ Port size *1	
6	R1/8
8	R1/4
Ⓒ Pressure display	
P02	0 to 0.2 MPa
P04	0 to 0.4 MPa
P10	0 to 1.0 MPa

⚠ Precautions for model No. selection

*1: NPT screws are available as made to order.

Adjustment

Turn the transparent face counterclockwise and pull it off forward.
Set the limit marker by moving the green arrow marker with a flathead screwdriver. After adjustment, always reattach the transparent face before supplying pneumatic pressure.
When setting the limit marker, take care not to bend the other indicators or to scratch the dial plate.
The limit markers do not exactly coincide with each other. A clearance of approx. one gradient may form.

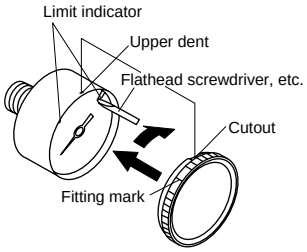

Dimensions CAD

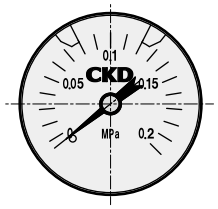

Pressure display: P02

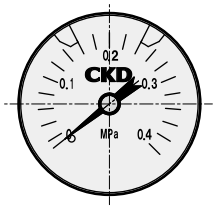

Pressure display: P04

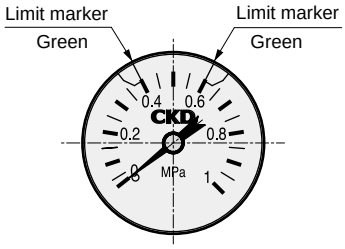

Pressure display: P10

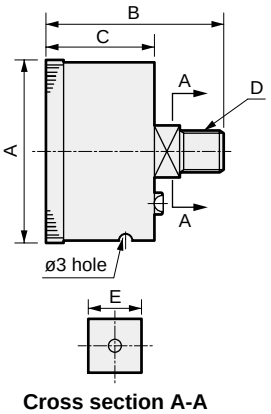

Cross section A-A

Model No.	A	B	C	D	E
G45D-6	ø39	41.5	26	R1/8	14
G45D-8	ø39	44.5	26	R1/4	14



General-use pressure gauge

G49D/G59D Series

● Port size: R1/8, R1/4

JIS symbol 

RoHS CAD

Specifications

Item		G49D	G59D
Working fluid		Liquid or gas (non-corrosive)	
Fluid temperature °C		5 (41°F) to 60 (140°F)	
Ambient temperature °C		5 (41°F) to 60 (140°F)	
Accuracy *1		Full scale ±3%	
Shape		DT type (rear side screw, stock section square)	
Display size		ø42	ø52
Material	Stock/Bourdon tube	Copper alloy *2	
	Housing	Steel plate + chrome plating	
	Lens	Glass	
Pressure range MPa		0 (≈0 psi, 0 bar) to 0.2 (≈29 psi, 2 bar) 0 (≈0 psi, 0 bar) to 0.4 (≈58 psi, 4 bar) 0 (≈0 psi, 0 bar) to 1.0 (≈150 psi, 10 bar) 0 (≈0 psi, 0 bar) to 2.0 (≈290 psi, 20 bar)	
Port size R		1/8,1/4	
Weight g		86	115

*1: The guaranteed indicator accuracy temperature is 20±15°C.
*2: The material of the Bourdon tube is phosphor bronze only for pressure indication "P20."

How to order

G49D - 6 - P02

Ⓐ Model No.
Ⓑ Port size
Ⓒ Pressure display

Code	Description
Ⓐ Model No.	
G49D	
G59D	
Ⓑ Port size *2	
6	R 1/8
8	R 1/4
Ⓒ Pressure display [MPa] *1	
P02	0 to 0.2
P04	0 to 0.4
P10	0 to 1.0
P20	0 to 2.0

Clean-room specifications (Catalog No. CB-033SA)

● Anti-dust generation structure for use in cleanrooms

G49D-.....- **P9***

G59D-.....- **P9***

Copper and PTFE free specifications (Page 320)

G49D-.....- **P6**

G59D-.....- **P6**

Specifications for rechargeable battery

(Catalog No. CC-1226A)

● Design compatible with rechargeable battery manufacturing process

G49D-.....- **P4**

G59D-.....- **P4**

Precautions for model No. selection

*1: Displays other than an MPa display are made to order.
*2: NPT screws are available as made to order.

Dimensions CAD

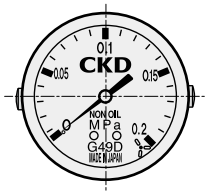

Pressure display: P02



Pressure display: P04

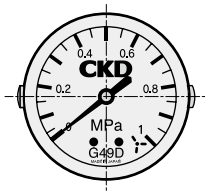

Pressure display: P10

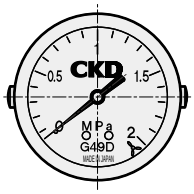

Pressure display: P20

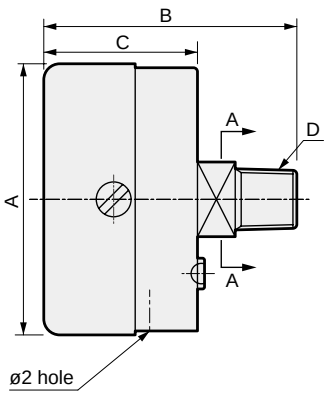

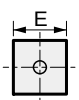

Cross section A-A

Model No.	A	B	C	D	E
G49D-6	ø43.5	40.5	24.5	R 1/8	12
G49D-8	ø43.5	44	24.5	R 1/4	14
G59D-6	ø52	44.5	28	R 1/8	14
G59D-8	ø52	46.5	28	R 1/4	14
G49D-6-P6	ø42.8	43.5	27.5	R 1/8	12
G59D-8-P6	ø52	50.5	26.5	R 1/4	14



General purpose pressure gauge for clean room

G49D-P70 -P9* G59D-P70 -P9* Series

● Port size: R1/8, R1/4

JIS symbol



RoHS CAD

Specifications

Item		G49D-P70/P9*	G59D-P70/P9*
Working fluid		Compressed air, N_2	
Fluid temperature °C		5 (41°F) to 60 (140°F)	
Ambient temperature °C		5 (41°F) to 60 (140°F)	
Accuracy *1		Full scale ±3%	
Shape		DT type (rear side screw, stock section square)	
Display system		ø43	ø52
Material	Bourdon tube	P90,P94:SUS316 P70: Copper alloy	
	Stock	P90, P94: SUS14 (SUS316 equivalent) P70: Copper alloy (nickel plating)	
	Housing	Steel (chrome plating)	
	Lens	Glass	
Pressure range MPa		0 (≈0 psi, 0 bar) to 0.2 (≈29 psi, 2 bar) 0 (≈0 psi, 0 bar) to 0.4 (≈58 psi, 4 bar) 0 (≈0 psi, 0 bar) to 1.0 (≈150 psi, 10 bar)	
Port size R		1/8	1/4
Weight g		90	140

*1: The guaranteed indicator accuracy temperature is 20±15°C.

How to order

G49D - 6 - P04 - P90

Ⓐ Model No.
Ⓑ Port size
Ⓒ Pressure display
Ⓓ Clean-room specifications

Code	Description
Ⓐ Model No.	
G49D	
G59D	
Ⓑ Port size *2	
6	R1/8 (**G49D only**)
8	R1/4 (**G59D only**)
Ⓒ Pressure display [MPa] *1	
P02	0 to 0.2
P04	0 to 0.4
P10	0 to 1.0

Ⓓ Clean-room specifications

	Material	Oil prohib.specs	Assembly	Packaging
P70	Copper alloy (nickel plating)	Oil-prohibited/water free	General environment	Clean packaging
P90	Stainless steel	Oil-prohibited/water free	Clean assembly	Clean packaging
P94	Stainless steel	Oil-prohibited/water free	General environment	Clean packaging

P94 prohibits the use of copper-based, silicon-based, and halogen-based materials (fluorine, chlorine, bromine).

Precautions for model No. selection

*1: Contact CKD for indications other than MPa.
*2: Contact CKD when ordering NPT thread.

Dimensions

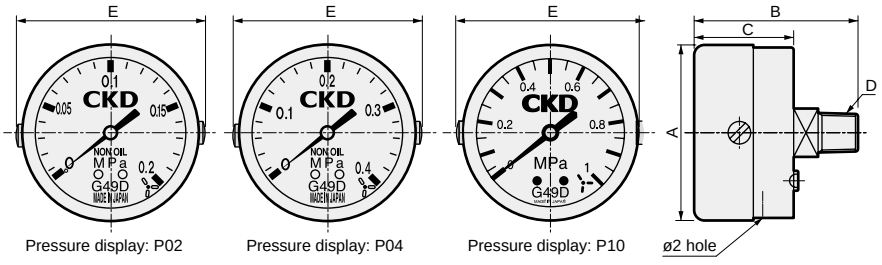

Pressure display: P02 | Pressure display: P04 | Pressure display: P10

Model No.	A	B	C	D	E
G49D-6-P02/P04/P10-P70	ø43	43.5	27.5	R 1/8	46.5
G59D-8-P02/P04/P10-P70	ø52	50.5	27	R 1/4	55.5
G49D-6-P02/P04/P10-P90/P94	ø43	43.5	27.5	R 1/8	46.5
G59D-8-P02/P04/P10-P90/P94	ø52	50.5	26.5	R 1/4	55.5



Pressure Gauge Outdoor Series

GW49D Series

● Port size: R1/8, R1/4

JIS symbol 

Specifications

1 MPa ≈ 145.0 psi, 1 MPa = 10 bar

Item		GW49D
Working fluid		Compressed air
Fluid temperature °C		5 (41°F) to 60 (140°F)
Ambient temperature °C		-10 (14°F) to 60 (140°F) (no freezing)
Accuracy *1		Full scale ±3% (with 5 to 35°C)
Shape		D type (rear side screw, stock section hexagon)
Display system		ø46.6
Material	Bourdon tube	Copper alloy
	Stock	Copper alloy (nickel plating)
	Housing	Stainless steel
	Lens	Tempered glass
Pressure range MPa		0 (≈0 psi, 0 bar) to 1.0 (≈145 psi, 10 bar)
Port size R		1/8, 1/4
Weight g		100

*1: The guaranteed indicator accuracy temperature is 20±15°C.

Dimensions

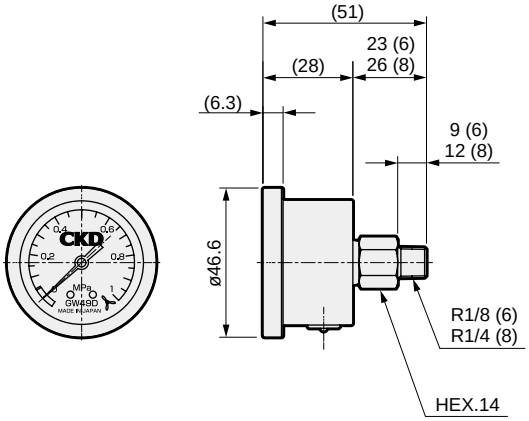

How to order

GW49D - 6 - P10

- A Model No.
- B Port size
- C Pressure display

Code	Description
A Model No.	
GW49D	
B Port size	
6	$R^1/_8$
8	$R^1/_4$
C Pressure display [MPa] *1	
P10	0 to 1.0 MPa

*1: Consult with CKD concerning psi or bar display.



Pressure gauge for panel mounting

G53D Series

JIS symbol 

RoHS CAD

Features

- A flush panel mount has been added to the conventional pressure gauge.
- M5 female screws are used as standard for the port size.

Specifications

Model No.		G53D
Working fluid		Compressed air
Fluid temperature	°C	5 (41°F) to 60 (140°F)
Ambient temperature	°C	-5 (23°F) to 60 (140°F) (no freezing)
Accuracy	*1	Full scale ±3%
Shape		DT type (rear side screw, stock section square)
Display size		ø52
Material	Stock/Bourdon tube	Copper alloy
	Housing	Steel plate + chrome plating
	Lens	Glass
Pressure range	MPa	0 (≈0 psi, 0 bar) to 0.2 (≈29 psi, 2 bar)
		0 (≈0 psi, 0 bar) to 0.4 (≈58 psi, 4 bar)
		0 (≈0 psi, 0 bar) to 1.0 (≈150 psi, 10 bar)
Port size	R	1/8 (with M5 female thread), 1/4 (with M5 female thread)
Weight	g	100

*1: The guaranteed indicator accuracy temperature is 20±15°C.

How to order

G53D - 8 - P02

- G53D: Model No.
- 8: Ⓐ Port size
- P02: Ⓑ Pressure display

Code	Description
Ⓐ Port size	***1**
6	1/8 (with M5 female thread)
8	1/4 (with M5 female thread)
Ⓑ Pressure display MPa	***2**
P02	0 to 0.2
P04	0 to 0.4
P10	0 to 1.0

⚠ Precautions for model No. selection

*1: Contact CKD when ordering NPT thread.
*2: Contact CKD for indications other than MPa.

Dimensions

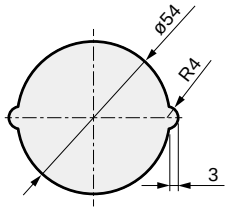

Panel cut dimension

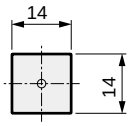

Cross-section A-A

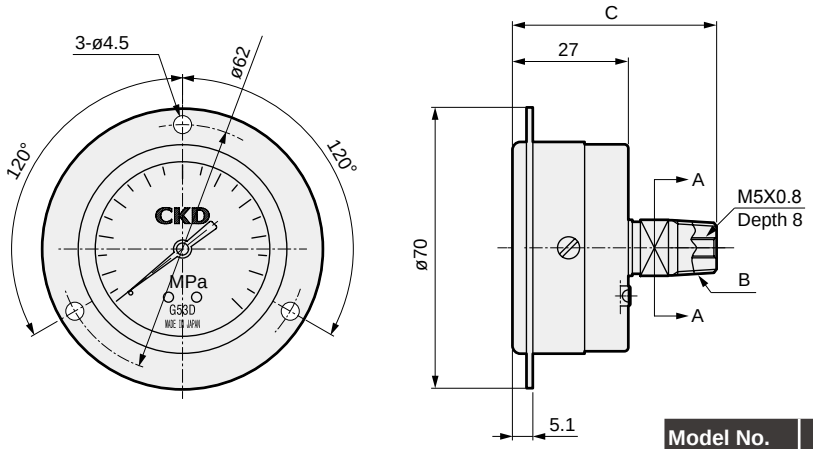

Model No.	B	C
G53D-6	Rc1/8	47
G53D-8	Rc1/4	50

Scale display

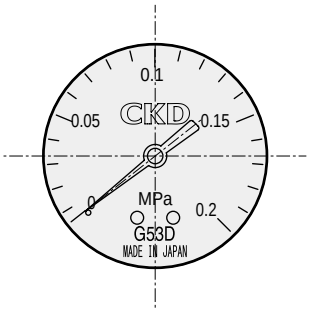

Pressure display: P02

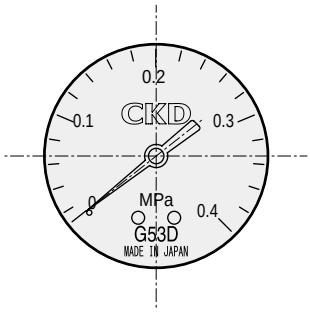

Pressure display: P04

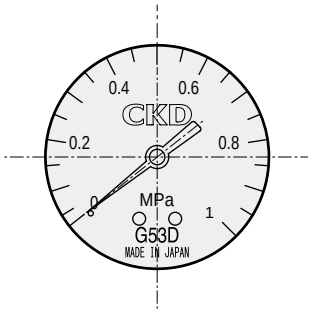

Pressure display: P10

Safety precautions

- Make sure that impact and vibration are not applied directly onto the body.
- Repeated and sudden increases or decreases in pressure and pressure pulsations must be avoided as they could adversely affect the life of the pressure gauge. Ease the pressure fluctuation in the circuit.

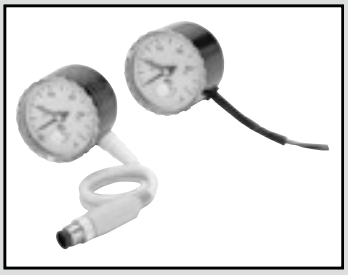

Pressure gauge with switch

G52D Series

JIS symbol

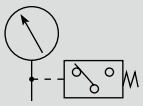

RoHS CAD

Features

- Pressure switch function added to the analog pressure gauge
- Nonpolar connector as an option
- Activation confirmation lamp as an option

Specifications

1 MPa = 10 bar

Item		Pressure gauge
Working fluid		Compressed air
Fluid temperature °C		5 (41°F) to 60 (140°F)
Ambient temperature °C		-5 (23°F) to 60 (140°F) (no freezing)
Accuracy *1		Full scale ±3%
Shape		DT type (rear side screw, stock section hexagon)
Material	Stock	Copper alloy
	Bourdon tube	Phosphor bronze
	Housing	Steel plate + chrome plating
	Lens	Polycarbonate resin
	Setting needle	ABS resin (green)
Pressure range *2		0 (≈0 psi) to 1.0 MPa (≈150 psi)
Port size R		1/4
Weight g		150

*1: The guaranteed indicator accuracy temperature is 20±15°C.
*2: Do not apply pressure exceeding the maximum indicated pressure. Otherwise, malfunctions may result.

1 MPa = 10 bar

Item	Pressure switch
Pressure switch setting range	0.1 (≈15 psi) to 0.8 MPa (≈120 psi)
Hysteresis	0.07 MPa (≈10 psi, 0.7 bar)
Contact array	Without lamp: 1ab (normally open, normally closed) With lamp: 1a (normally open)
Setting needle error	±0.05 MPa (≈7.3 psi, 0.5 bar)
Lead wire length	300 mm
Electrical connections	Without lamp: 3 lead wires With lamp: M12 connector (4-pin)
Indicator lamp	LED (load current: 8 to 30 mA)

Micro switch rating

Load	Resistance load	
Rated voltage	30 VDC	125 VAC
Operating current range *1	0.1 to 2 A	0.1 to 5 A

*1: Use 12 VDC or more for 0.10 to 0.16 A.

Electrical wiring diagram

○ Without indicator lamp

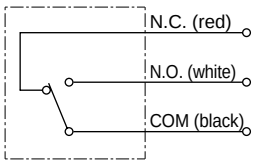

○ With indicator lamp/LED

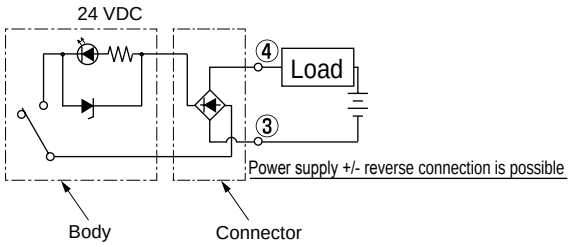

How to order

G52D - 8 - P10 - 3N

- G52D: Model No.
- 8: A Port size
- P10: B Pressure display
- 3N: C Option

Code	Description
A Port size	*1
8	R1/4
B Pressure display MPa	*2
P10	0 to 1.0
C Option	
Blank	Without indicator lamp
3N	LED (24 VDC) no polarity

Terminal layout of male connectors

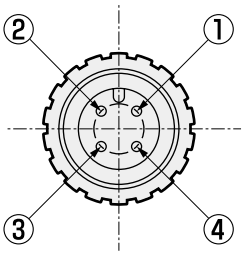

Precautions for model No. selection

*1: Contact CKD when ordering NPT thread.
*2: Contact CKD for indications other than MPa.

Dimensions

Without indicator lamp

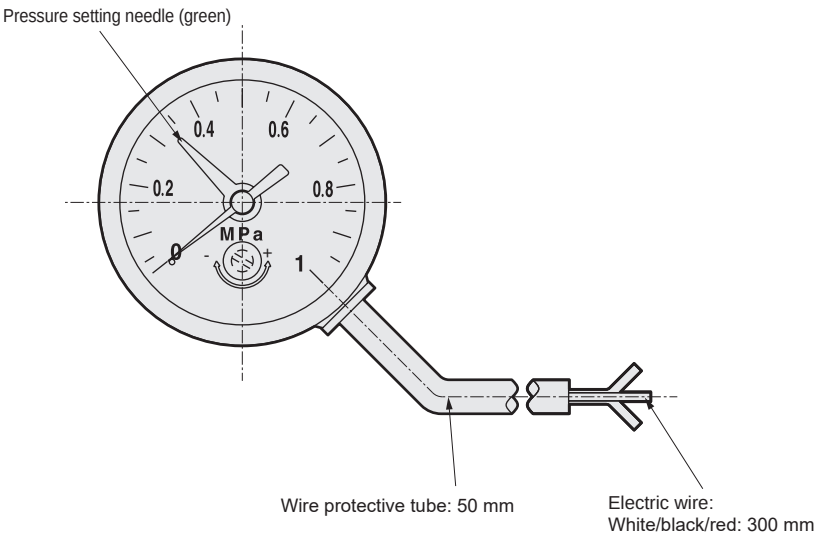

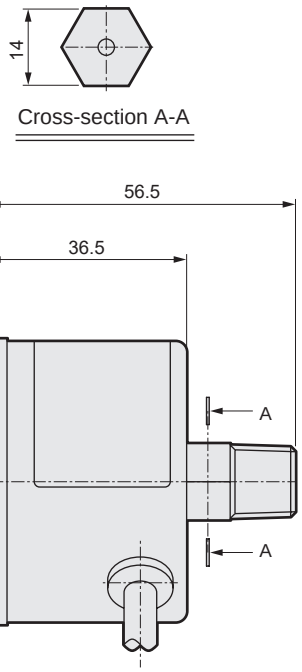

With indicator lamp

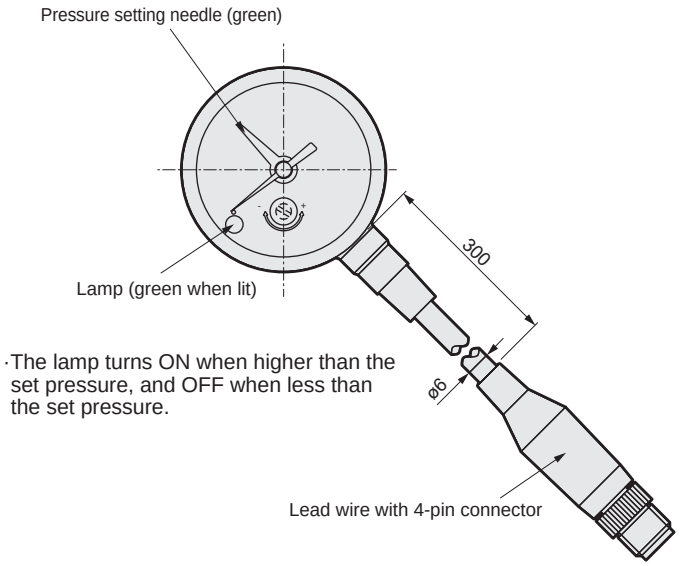

·The lamp turns ON when higher than the set pressure, and OFF when less than the set pressure.

Setting the setting needle

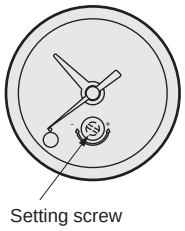

○ Pass a flathead screwdriver (tip width 2.9 mm) through the rubber cap on the lens, and turn the setting screw to set the setting needle to the required pressure.

* Turn the setting screw
· Minus (-) side (clockwise)
→ set pressure decrease
· Plus (+) side (counterclockwise)
→ set pressure increase

⚠ Safety precautions

- Make sure that impact and vibration are not applied directly onto the body.
- Repeated and sudden increases or decreases in pressure and pressure pulsations must be avoided as they could adversely affect the life of the pressure gauge. Ease the pressure fluctuation in the circuit.
- The pressure switch setting value is indicated with the green setting needle. Set the pressure switch value so that the setting needle turns clockwise. If the setting needle passes the setting position, turn the setting needle counterclockwise once, then reset.
- Set a difference of 0.1 MPa and over from the working pressure (including pressure drops). Malfunctions could result if the difference is small. Refer to the drawings above for details on setting the setting needle. When using the pressure switch in the normally open state, the switch may not turn ON when the pressure drops unless pressure, to which set indication error (±0.05 MPa), hysteresis (0.07 MPa), and indicated accuracy (±3% F/S) have been added, has been applied.
- Add the pressure gauge's indication accuracy to the maximum value of the setting indicator and indicator error (set indicator error).
- When a DC lamp is used, the internal voltage drop is to be 4 V or less and load current 8 to 30 mA at 24 VDC. Please be careful.
- Wire such that repeated bending or tension are not applied to the lead wires. Failure to do so could lead to disconnection or malfunction.
- Avoid using in an atmosphere containing silicone (siloxane). Contact failure could result.
- Setting needle error may increase depending on the operating environment and operating frequency. Check the operation periodically.



Miniature pressure gauge

G29D Series

● Port size: R1/16, R1/8

JIS symbol 

RoHS CAD

Specifications

Item		G29D
Working fluid		Compressed air
Fluid temperature °C		5 (41°F) to 60 (140°F)
Ambient temperature °C		5 (41°F) to 60 (140°F)
Accuracy		Guide meter
Shape		DS type (rear side screw, stock section hexagon)
Display size		ø21
Material	Body	Zinc die-casting + paint
	Lens	Polycarbonate resin
Pressure range MPa		0 (≈0 psi, 0 bar) to 1.0 (≈150 psi, 10 bar)
Port size R		1/16,1/8
Weight g		12

How to order

G29D - 6 - P10

Ⓐ Port size

Ⓑ Pressure display

Code	Description
Ⓐ Port size	
3	R 1/16
6	R 1/8
Ⓑ Pressure display [MPa]	
P10	0 to 1.0

Dimensions CAD



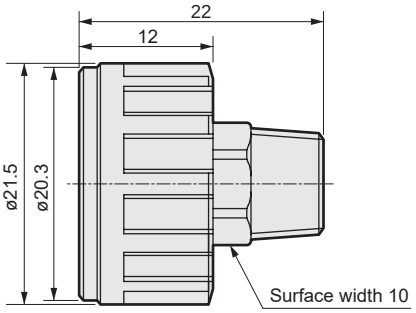



Compact round pressure gauge

G39D Series

● Port size: R1/8

JIS symbol



RoHS CAD

Specifications

Item		G39D
Working fluid		Compressed air
Fluid temperature °C		5 (41°F) to 60 (140°F)
Ambient temperature °C		5 (41°F) to 60 (140°F)
Accuracy *1		Full scale ±3%
Shape		DT type (rear side screw, stock section hexagon)
Display size		ø26
Material	Stock/Bourdon tube	Copper alloy (phosphor bronze)
	Housing	Steel plate + paint
	Lens	Acrylic resin
Pressure range MPa		0 (≈0 psi, 0 bar) to 0.4 (≈58 psi, 4 bar) 0 (≈0 psi, 0 bar) to 1.0 (≈150 psi, 10 bar)
Port size R		1/8
Weight g		37

*1: The guaranteed indicator accuracy temperature is 20±15°C.

How to order

G39D - 6 - P10

Ⓐ Port size

Ⓑ Pressure display

Code	Description
Ⓐ Port size	
6	R 1/8
Ⓑ Pressure display [MPa]	
P04	0 to 0.4
P10	0 to 1.0

Dimensions CAD

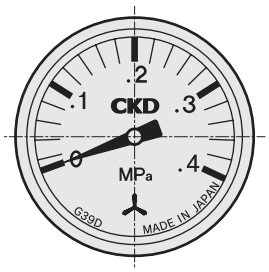

Pressure display: P04

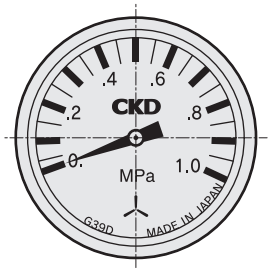

Pressure display: P10

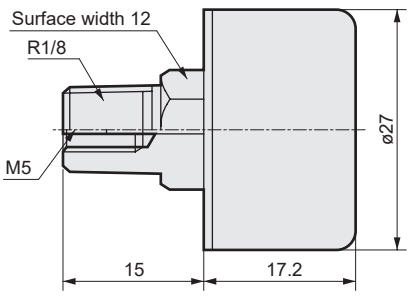

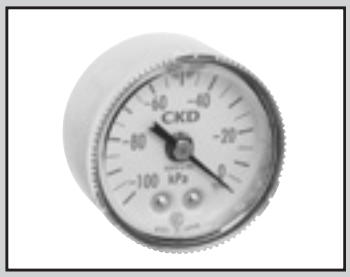

Vacuum pressure gauge with limit marker

VG41D Series

Visual inspection management of vacuum pressure is easy thanks to the green arrow.

● Port size: R1/8

RoHS

Specifications

Item		VG41D
Working fluid		Compressed air
Fluid temperature °C		5 (41°F) to 50 (122°F)
Ambient temperature °C		5 (41°F) to 50 (122°F)
Accu. *1 Class		JIS2.5 or equivalent (±2.5%F·S)
Shape		DT type (rear side screw/stock section square)
Display size		ø42
Material	Stock/Bourdon tube	Copper alloy
	Housing	Stainless steel
	Lens	Polycarbonate resin
	Marker	Acetal resin
Pressure range (Setting range) kPa		-100 (≈-15 psi, -1 bar) to 0 (≈0 psi, 0 bar)
Port size		R1/8
Weight g		82

*1: The guaranteed indicator accuracy temperature is 20±15°C.

How to order

VG41D - 6 - P01

Code	Description
Ⓐ Model No.	
VG41D	Pressure gauge with limit marker
Ⓑ Port size *1	
6	R 1/8
Ⓒ Pressure display	
P01	-100 to 0 kPa

⚠ Precautions for model No. selection

*1: NPT screws are available as made to order.

Adjustment

Remove the transparent case, then move the green arrow marker with a screwdriver, etc. After adjustment, always reattach the transparent face before supplying pneumatic pressure.

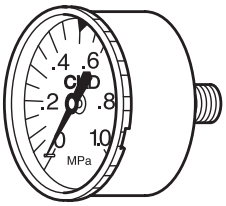

Remove the transparent case by turning it counterclockwise and pulling it off.

Dimensions

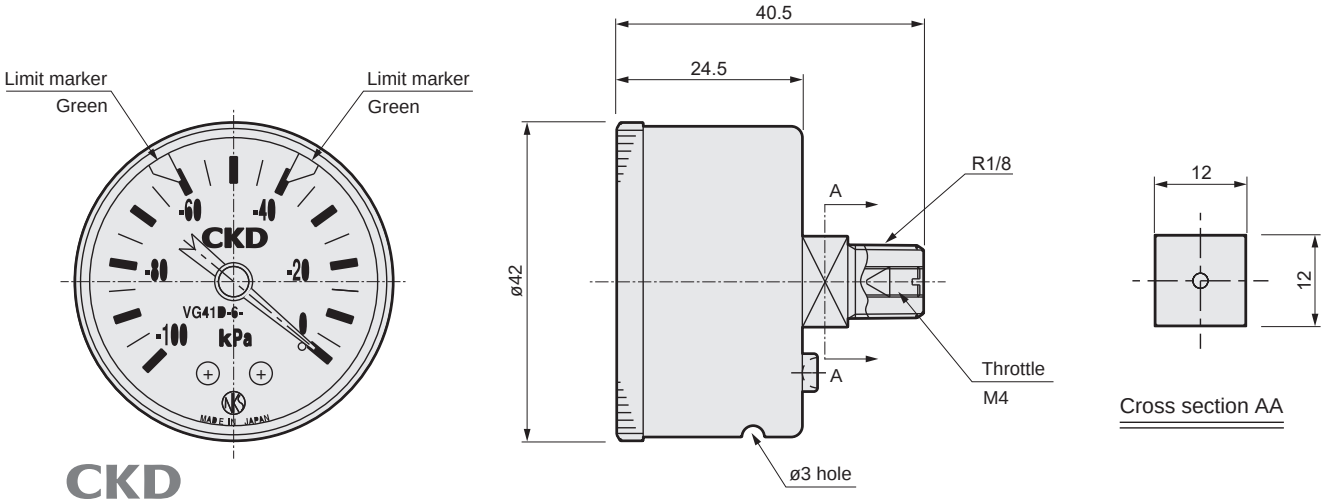

Gauge plug assembly (assembly of gauge plug, gasket and mounting screw)

Use when mounting the pressure gauge.

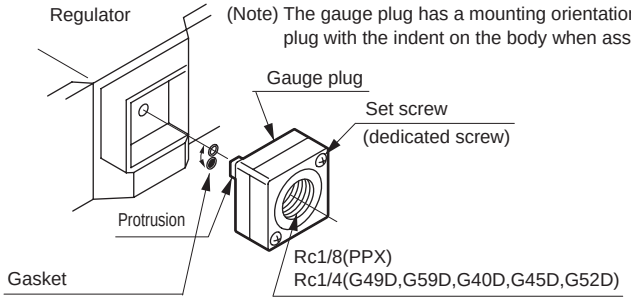

(Note) The gauge plug has a mounting orientation. Align the protrusion on the gauge plug with the indent on the body when assembling.

If the gasket is turned 180° as shown in the figure, the regulator pressure flows to the pressure gauge.

* Tighten the pressure gauge with a torque of 10 to 15 N·m or less.
* Use when detecting external pressures as well.

Gauge plug assembly model No.	Port size	Compatible model	Compatible pressure gauge
R1000-W-G-PLUG	Rc1/4	For 1000-W Series	G49D, G59D, G40D, G45D, G52D
R1000-W-T6-PLUG	Rc1/8		PPX (Rc1/8 only)
R3000-W-G-PLUG	Rc1/4	For 2000-W, 3000-W, 4000-W,	G49D, G59D, G40D, G45D, G52D
R3000-W-T6-PLUG	Rc1/8	6000-W, 8000-W Series	PPX (Rc1/8 only)
R1000-W-G-PLUG-N	1/4NPT	For 1000-W Series	
R1000-W-G-PLUG-G	G1/4		
R3000-W-G-PLUG-N	1/4NPT	For 2000-W, 3000-W, 4000-W,	
R3000-W-G-PLUG-G	G1/4	6000-W, 8000-W Series	

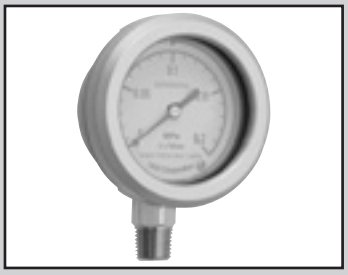

Differential pressure gauge

GA400-8-P02 Series

For controlling service life of the air filter.

● Differential pressure measuring range: 0 to 0.2MPa ±2.5% F.S.

JIS symbol 

RoHS

Specifications

Descriptions	GA400-8-P02
Max. working pressure MPa	1.0
Proof pressure MPa	1.5
Fluid/ambient temperatures °C	5 to 65
Differential pressure measured range MPa	0 to 0.2
Pressure gauge accuracy	Full scale ±2.5%
Port size (high pressure side) R	1/4
Weight kg	0.26

* Standard accessories of the differential pressure gauge (GA400-8-P02) include a 0.5 m nylon tube (O.D. ø4 x I.D. ø2.5), and a single straight half union (port size: R1/4, model No. MJS4-8). An elbow union (port size R1/4, model No. MJL4-8) is included.
Designate GA400-8-P02-T1.5 when using the type with 1.5 m long nylon tube.

Clean-room specifications (Catalog No. CB-033SA)

● Anti-dust generation structure for use in cleanrooms

GA400-.....- **P90**

Dimensions

GA400-8-P02

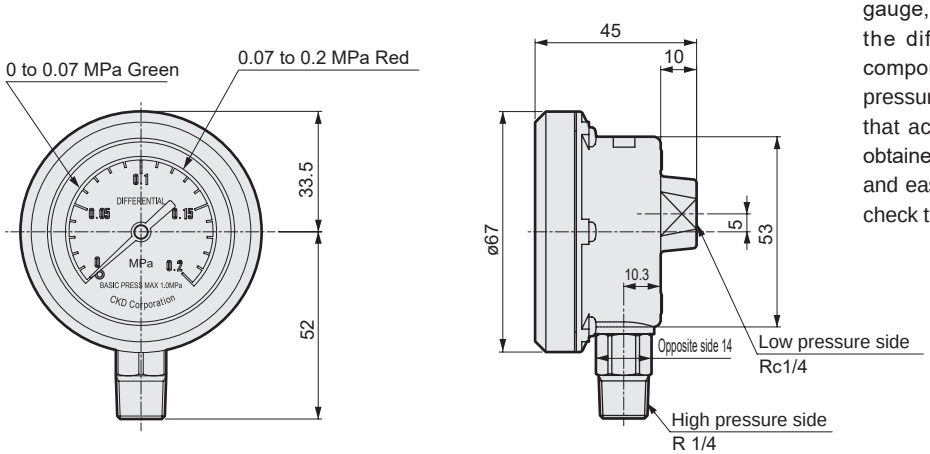

Operational principle

Applying the measuring principles of a pressure gauge, the differential pressure gauge measures the differential pressure between pneumatic components in the pneumatic circuit. Differential pressure is measured in the pressurized state, so that accurate and precise measuring results are obtained. Just assemble the bypass circuit for quick and easy mounting. Maintenance is also easy: just check the pressure gauge.

Precautions

⚠ Precautions

When assembling a stop valve in the by-pass circuit, always open the stop valve before pressurizing with air.

⚠ Safety precautions (GA400)

*1: Avoid direct sunlight.

*2: If the compressed air temperature during use is higher than the ambient temperature, moisture may condense inside the differential pressure gauge since it is cooled by the ambient temperature.



Moisture indicator

6119-2C Series

For dew point monitor of desiccant air dryer.

● Port size: Rc 1/4

RoHS

Specifications

Item		6119-2C
Max. working pressure	MPa	1.0 (≈150 psi, 10 bar)
Proof pressure	MPa	1.5 (≈220 psi, 15 bar)
Fluid temperature	°C	5 (41°F) to 65 (149°F)
Max. inlet air temperature	°C	32 (89.6°F)
Max. flow rate	ℓ/min(ANR)	50
Port size	Rc	1/4
Weight	kg	0.2

Internal structure and parts list

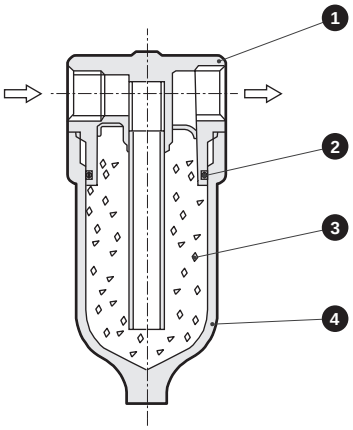

No.	Main part	6119
1	Body	Zinc die casting
Parts list		
No.	**Part name**	**Material**	**Model No.**
2	O-ring	Special nitrile rubber	A1019-ORING
3	Silica gel	Silica gel	6119-SILICA-GEL(20g)
4	Bowl	Polycarbonate	A3019-BOWL

Dimensions

6119-2C

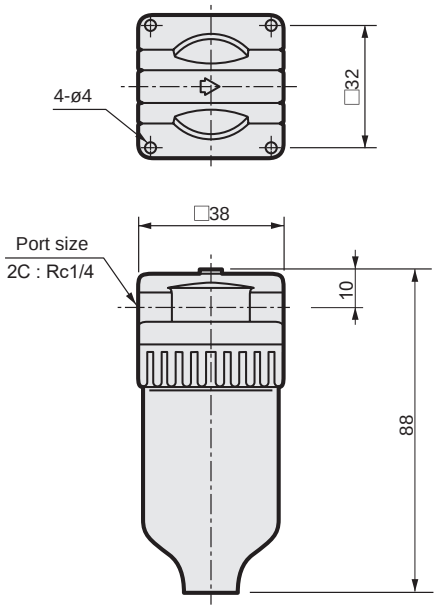

● Wall bracket: 6506

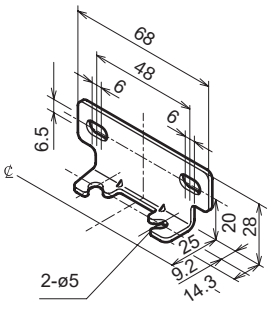

* Tapping screw attached

Operational principle

Through the moisture indicator, the dew point of ultra-dry air is monitored using the chemical properties of silica gel whose color changes from blue to pink after moisture is absorbed.
If relative humidity in compressed air reaches 50%, the color changes to orange, so maintenance of the desiccant air dryer is easy.

⚠ Safety precautions

Avoid using in a place where the working air flow can increase or decrease vigorously or where the max. flow rate is exceeded. The silica gel could flow to the secondary side.

Pneumatic components (pressure gauge, display)

Safety Precautions

Be sure to read this section before use.
Refer to Intro Page 63 for precautions for general pneumatic components.

Product-specific cautions: (Pressure gauge, display)

Mounting, installation and adjustment

⚠CAUTION

■Pressure gauge

Repeated and sudden increase and decrease in pressure and pressure pulsation must be avoided because it could adversely affect the life of the pressure gauge. Either ease the pressure fluctuation in the circuit or contact CKD so that a pressure gauge with a cushioning screw can be prepared. Pressure exceeding the pressure range may damage the gauge.

■Mount vertically in respect to the ground so that the scale can be viewed straightforward. (See below) Mounting in any other direction can cause the needle movement to become unstable, and can cause the accuracy to drop.

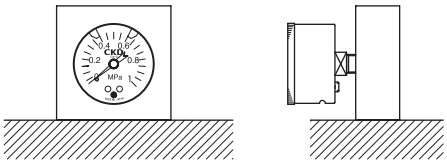

Use/maintenance

■Make sure that impact and vibration are not applied directly onto the body.

■Carefully prevent water hammer when using non-corrosive liquid (G49D, G59D).

■Pressure limit markers (G45D) will not completely seat against each other. A clearance of approx. one gradient may form.

Chemical resistance of plastic

⚠WARNING

- The chemical resistance of the lens is shown below.
- Avoid using products in an atmosphere where chemicals are contained in compressed air or atmosphere, or where they could adhere to parts.
- Use in the above state could lead to lens damage.

Polycarbonate lens: G52D, G29D, VG41D
Polycarbonate bowl: 6119
Polyamide lens: G40D, G45D

Chemical resistance of plastic lens/bowl

Types of chemicals	Categories of chemicals	Main products of chemicals	General applications	Polycarbonate lens/bowl	Polyamide lens
Inorganic chemicals	Acids	Hydrochloric acid, sulfuric acid, hydrofluoric acid, phosphoric acid, chromic acid, etc.	Acid washing of metals, acidic degreasing solution, coating treatment solution, etc.	×	×
	Alkalines	Alkalis such as caustic soda, caustic potash, calcium hydroxide, aqueous ammonia, sodium carbonate	Alkaline degreasing solution for metals Soluble coolant, leakage detection agent	×	○
	Inorganic salts	Sodium sulfide, sodium nitrate, potassium bichromate, sulfate of soda, etc.		×	○
Organic chemicals	Aromatic hydrocarbons	Benzene, toluene, xylene, ethyl benzene, styrene, etc.	Contained in paint thinner (benzene, toluene, and xylene)	×	×
	Chlorinated aliphatic hydrocarbons	Methyl chloride, ethylene chloride, methylene chloride, acetylene chloride, chloroform, trichlene, perchlene, carbon tetrachloride	Organic solvent-based washing solution for metals (trichlene, perchlene, carbon tetrachloride, etc.)	×	○
	Chlorinated aromatic hydrocarbons	Chlorobenzene, dichlorobenzene, benzene hexachloride (B/H/C), etc.	Agricultural chemicals	×	○
	Petroleum components	Solvent naphtha, gasoline, kerosene		×	○
	Alcohols	Methyl alcohol, ethyl alcohol, cyclohexanol, benzyl alcohol	Used as antifreezing agent Leakage detection agent	×	×
	Phenol	Carbolic acid, cresol, naphthol, etc.	Disinfectant solution	×	×
	Ethers	Methyl ether, methyl ethyl ether, ethyl ether	Additive of brake oil	×	○
	Ketones	Acetone, methyl ethyl ketone, cyclohexanone, acetophenone, etc.		×	×
	Carboxylic acids	Formic acid, acetic acid, butyl acid, acrylic acid, oxalic acid, phthalic acid, etc.	Dyes/oxalic acid for aluminum processing, phthalic acid for paint base and leakage detection agents	×	×
	Esters	Dimethyl phthalate (DMP), diethyl phthalate (DEP), dibutyl phthalate (DBP), dioctyl phthalate (DOP)	Lubricant, synthetic oil, rust preventing agent additive plasticizer for synthetic resin	×	○
	Oxyacids	Glycol acid, lactic acid, malic acid, citric acid, tartaric acid		×	×
	Nitro compounds	Nitromethane, nitroethane, nitroethylene, nitrobenzene, etc.		×	○
	Amines	Methylamine, dimethylamine, ethylamine, aniline, acetanilide, etc.	Additive of brake oil	×	×
	Nitriles	Acetonitrile, acrylonitrile, benzonitrile, acetoisonitrile, etc.	Raw material for nitrile rubber	×	○

○: Resistant, ×: Non-resistant (plastic will become damaged.)

Compact regulator, filter/regulator

■ **F.R.L units**

Overview

There is a variety of compact filter regulators ideal for semiconductor manufacturing lines and compact device fields. Select according to the application.

Features

Compact, lightweight and space saving

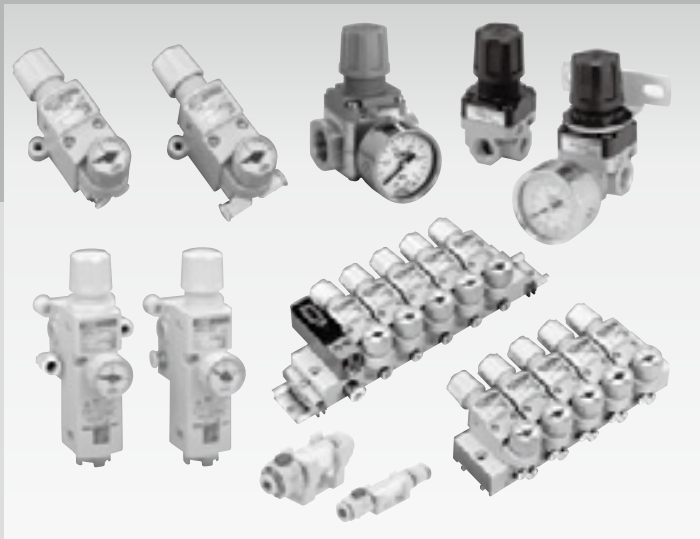

CONTENTS

Series variation 4 to 19

Regulator

● Compact piston (RA800) 382
● Compact (RB500) 386

Filter/regulator

● WB500 388

Block manifold regulator

● MNRB500 392
Block configuration 398
Technical data 403
Manifold specifications 405

Inline filter

● FSL 406

Separated

● F.R.L. kit K60570 410
● F.R. unit B7019 412
● Air filter A1019 414
● Micro alescer/micro naught 1219 416
● Regulator miniature B2019 418
● Reverse regulator 2419 420
● Relief valve B6061 422
● Lubricator Econo-mist A3019 424

Regulator for water

● WR1/WR2 430
⚠Safety precautions 434



Compact piston regulator

RA800 Series

Regulator with small size, light weight and improved operation.

● Port size: Rc1/8, Rc1/4

JIS symbol 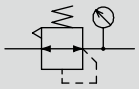

RoHS CAD

Specifications

Item		RA800	
Working fluid		Compressed air	
Max. working pressure MPa		1.0 (≈150 psi, 10 bar)	
Proof pressure MPa		1.5 (≈220 psi, 15 bar)	
Ambient/fluid temp °C		5 (41°F) to 60 (140°F)	
Set pressure MPa		0.05 (≈7.3 psi, 0.5 bar) to 0.85 (≈120 psi, 8.5 bar)	
Pressure relief		With relief mechanism	
Port size	IN/OUT	Rc1/8	Rc1/4
	GAUGE	Rc1/4	
Weight g		110	

Option weight

* Add to the weight of the standard accessories.

G	Pressure gauge	86 g
B	Bracket	30 g

Flow characteristics

● For standard

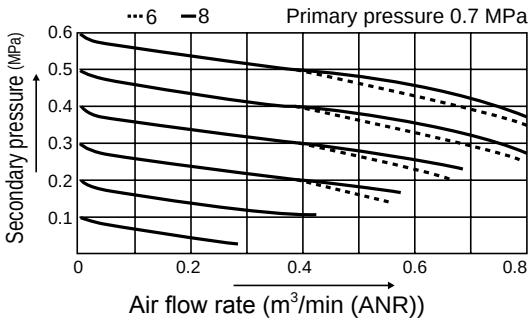

● For low pressure: L

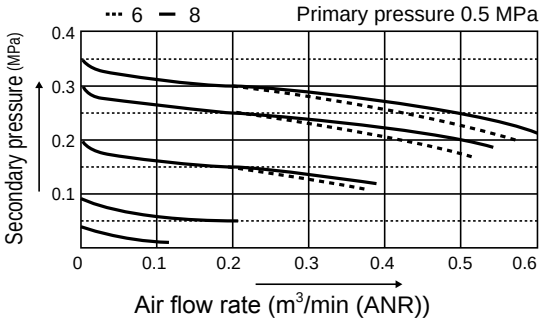

* Air flow rate is shown with atmospheric pressure conversion value m³/min. (ANR).

Pressure characteristics

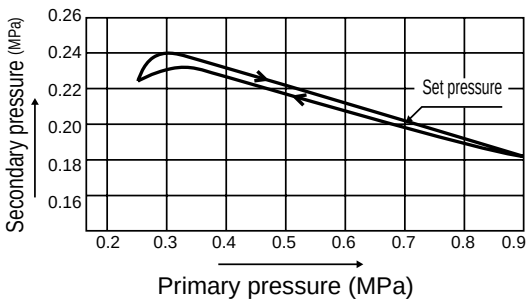

How to order

RA800 - 6 - P - G

- RA800: Model No.
- 6: Ⓐ Port size
- P: Ⓑ Option *1
- G: Ⓒ Included product

Code		Description
Ⓐ Port size		
6		Rc1/8
8		Rc1/4
Ⓑ Option		
Panel mount *2	**Blank**	Without nut
	P	With nut
Pressure range	**Blank**	0.05 to 0.85 MPa (Pressure gauge: G49D-8-P10)
	L	0.05 to 0.35 MPa (Pressure gauge: G49D-8-P04)
Pressure relief	**Blank**	Relief
	N	Non-relief
Ⓒ Included product		
Blank		None
G	*3	Pressure gauge (G49D-8-P10)
B	*2	Bracket (RA800-BA083)

⚠ Precautions for model No. selection

*1: When selecting options for several items, list options in order from the top.
*2: "B" bracket attached is available only for option code P (panel mount).
*3: If "L" is selected for the pressure range option, the low-pressure gauge (G49D-8-P04) will be used.

Internal structure and parts list

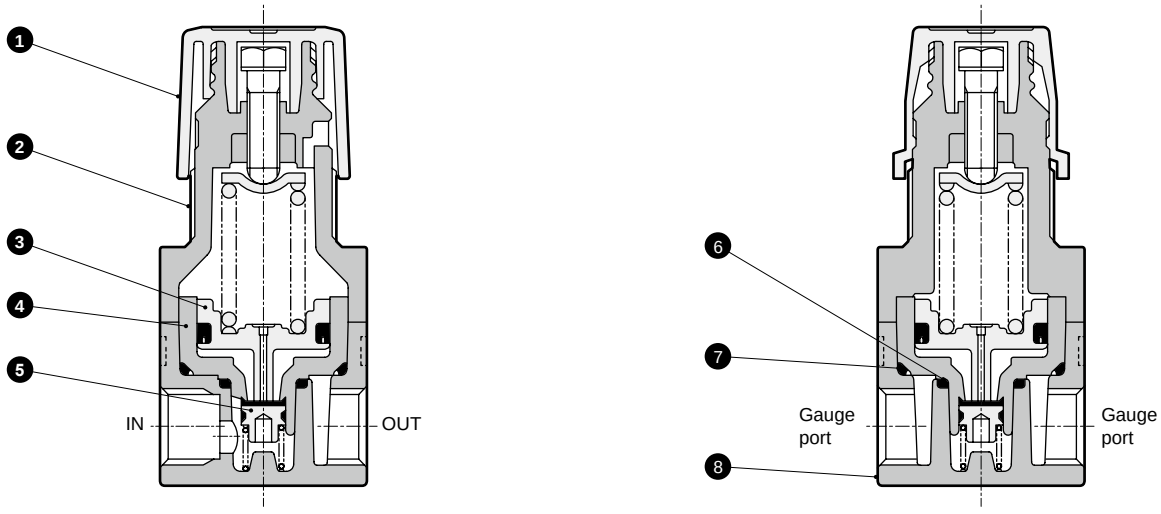

No.	Part name	Material	No.	Part name	Material
1	Knob	Polyacetal resin	5	Valve element	Copper alloy/hydrogenated nitrile rubber
2	Cover	Polyamide resin	6	O-ring	Nitrile rubber
3	Piston assembly	Polyacetal resin, nitrile rubber	7	O-ring	Nitrile rubber
4	Piston guide	Polyphenylene sulfide resin	8	Body	Aluminum alloy die-casting

Dimensions CAD

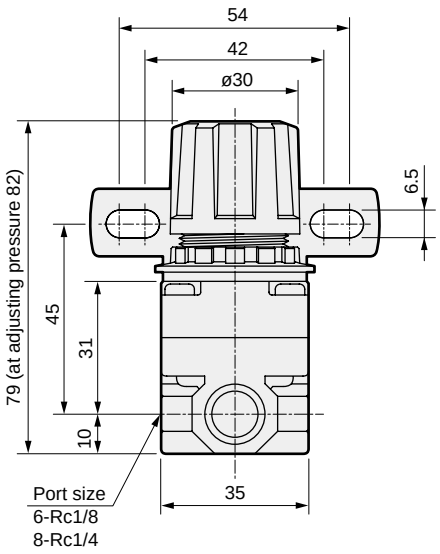

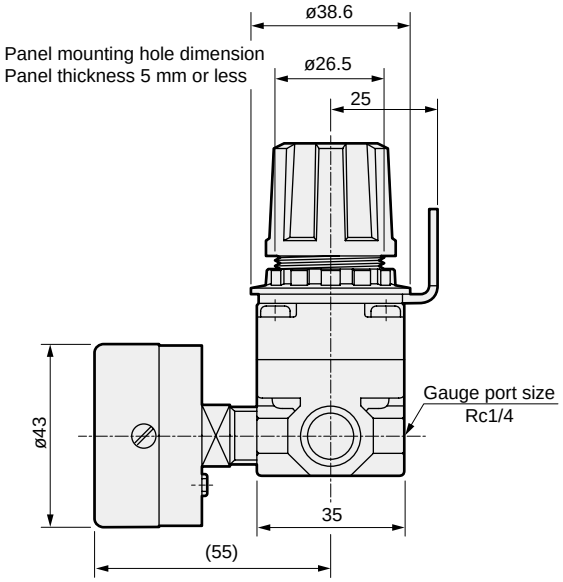

* B: bracket, G: pressure gauge, P: panel mount are optional.

● Bracket: RA800-BA083

· Material: Steel
Zinc plated

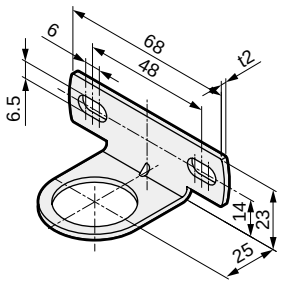

⚠ Cautions for use and maintenance

To install this product on a panel or wall bracket, when disassembling the knob, if the screw has come out, insert the screw into the knob or the cover until it clicks.

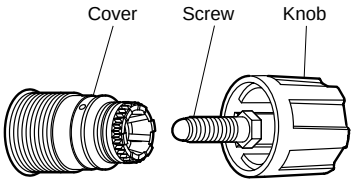

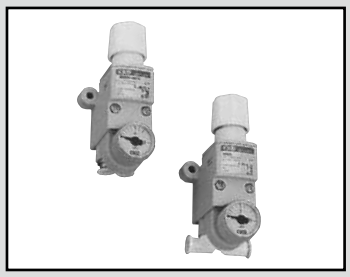

Compact regulator

RB500 Series

Compact, space saving structure and reverse flow function integrated.

● Port size: Push-in fitting ø4, ø6

JIS symbol 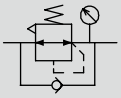

RoHS CAD

Specifications

Item		RB500
Working fluid		Compressed air
Max. working pressure MPa		1.0 (≈150 psi, 10 bar)
Proof pressure MPa		1.5 (≈220 psi, 15 bar)
Ambient / fluid temperatures °C		5 (41°F) to 60 (140°F)
Set pressure MPa		0.05 (≈7.3 psi, 0.5 bar) to 0.7 (≈100 psi, 7 bar) (*1)
Pressure relief		With relief mechanism
Port size	IN/OUT	Push-in fitting: ø4/ø6
	GAUGE	Rc1/8
Weight g		80

*1: Low pressure specifications are 0.05 to 0.35.

Specifications for rechargeable battery (Catalog No. CC-1226A)

● Structure compatible with rechargeable battery manufacturing process

RB500 – ..... – P4

Ozone-proof specifications (Ending Page 14)

RB500 – ..... – P11

Flow characteristics

● RB500-SSC4

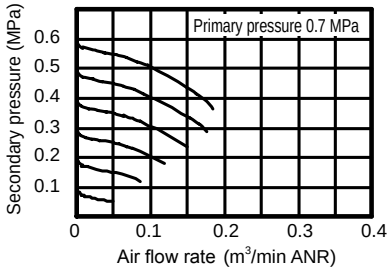

● RB500-SSC6

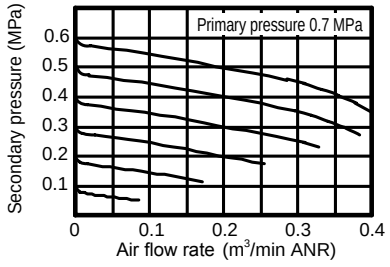

Pressure characteristics

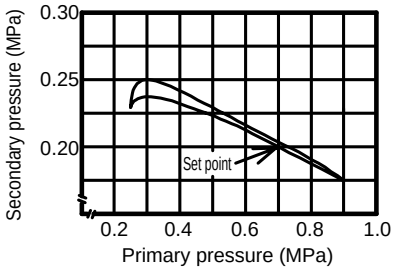

How to order

RB500 - SSC4 - PG39

Model No. | Ⓐ Connection | Ⓑ Option

Code			Description
Ⓐ Connection			
Direction	IN	S	Straight
		L	Elbow
	OUT	S	Straight
		L	Elbow
Bore size		C4	ø4
		C6	ø6
Ⓑ Option			
Panel mount *2		Blank	Without nut
		P	With nut
Pressure range		Blank	0.05 to 0.7 MPa (Pressure gauge: G29D-6-P10)
		L	0.05 to 0.35 MPa (Pressure gauge: G39D-6-P04)
Pressure relief		Blank	Relief
		N	Non-relief
Pressure gauge		Blank	With pressure gauge
		T	No pressure gauge (gauge port Rc1/8)
		G39	With pressure gauge (G39D-6-P10)

⚠ Precautions for model No. selection

*1: ø21 0 to 1.0 MPa pressure gauge is standard.
For low pressure, ø27 0 to 0.4 MPa low pressure gauge is provided.

*2: Indicate option code “P” for panel mounting.

Option weight

* Add to the weight of the standard accessories.

Panel mount	P	With nut	2 g
Pressure range	L	0.05 to 0.35 MPa	19 g
Pressure gauge	T	No pressure gauge	-12 g(L:-31 g)
	G39	With pressure gauge	19 g

Internal structure and parts list

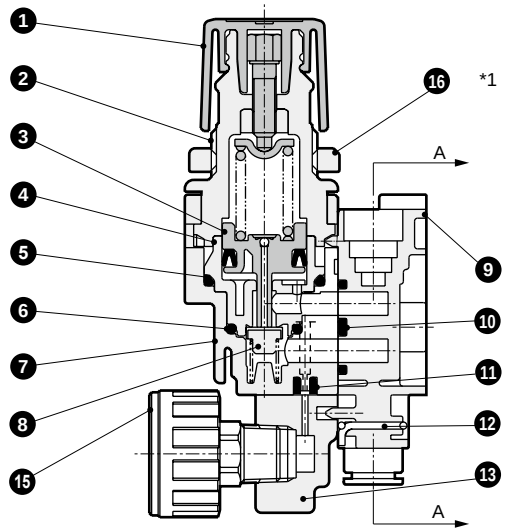

Cross-section A-A

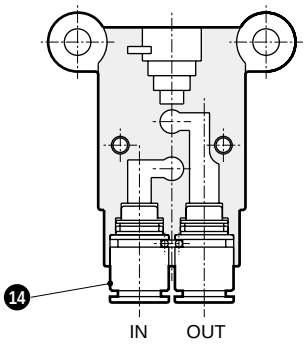

No.	Part name	Material
1	Knob	Polyacetal resin
2	Cover	Polyamide resin
3	Piston assembly	Polyacetal resin, nitrile rubber
4	Piston guide	Polyacetal resin
5	O-ring	Nitrile rubber
6	O-ring	Nitrile rubber
7	Body	Polyamide resin
8	Valve element	Aluminum, hydrogenated nitrile rubber
9	Piping block assembly	Polyamide resin/steel
10	Body packing seal	Hydrogenated nitrile rubber
11	Packing	Nitrile rubber
12	Stop pin	Stainless steel
13	Gauge plug	Polyamide resin
14	Cartridge fitting	
15	Pressure gauge	
16	Mounting nut	Polyacetal resin

*1: A mounting nut is optional. Nut is attached only for option code “P”.

Dimensions

CAD

● RB500 axial piping

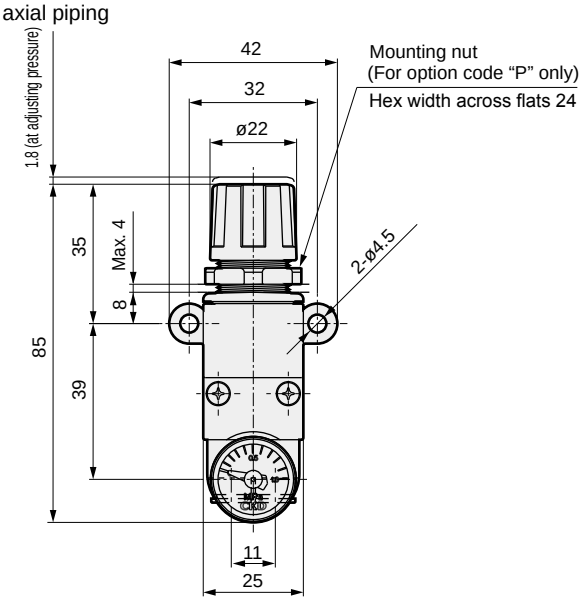

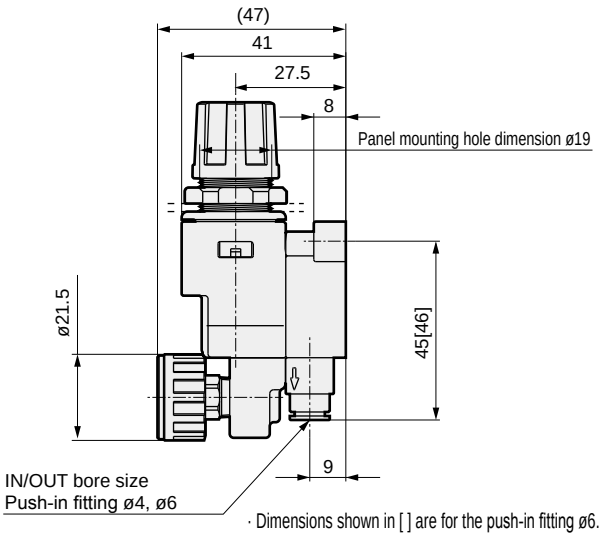

· Dimensions shown in [ ] are for the push-in fitting ø6.

● RB500 elbow piping

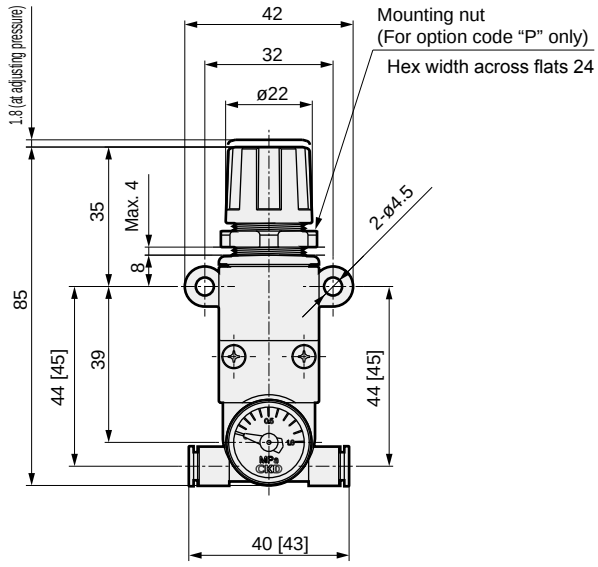

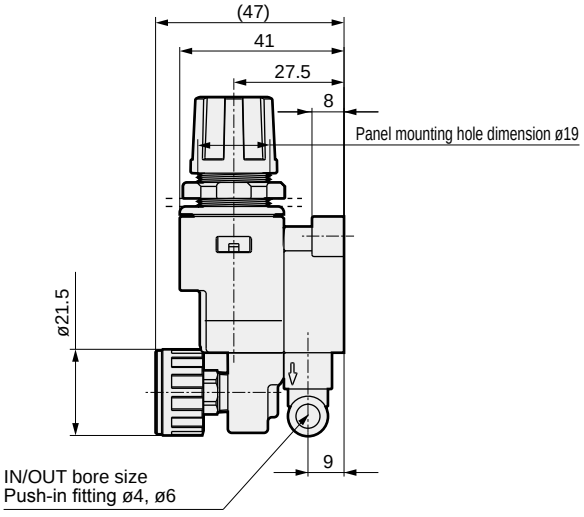

· Dimensions shown in [ ] are for the push-in fitting ø6.

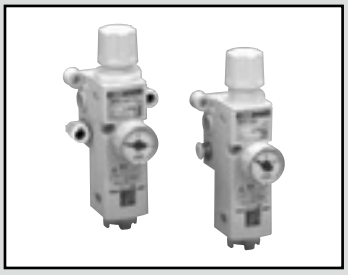

Compact filter/regulator

WB500 Series

JIS symbol

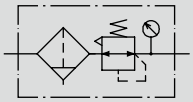

Features

- Compact
  Push-in fitting and bracket are integrated to reduce total space.
- Lightweight
  Resin is used in body material to reduce weight.
- Increased workability
  Push-in fitting is provided as standard. The piping direction can be selected from straight or elbow. Plumbing is easy.

Specifications

Item		WB500
Working fluid		Compressed air
Max. working pressure MPa		1.0 (≈150 psi, 10 bar)
Proof pressure MPa		1.5 (≈220 psi, 15 bar)
Ambient / fluid temperatures °C		5 (41°F) to 60 (140°F)
Filtration rating μm		5
Set pressure MPa		0.05 (≈7.3 psi, 0.5 bar) to 0.7 (≈100 psi, 7 bar) (*1)
Pressure relief		With relief mechanism
Drain capacity cm^3		1.0
Drainage method		Manual
Port size	IN/OUT	Push-in fitting: ø4/ø6
	GAUGE	Rc1/8
Weight g		100

*1: Low pressure specifications are 0.05 MPa to 0.35 MPa.

How to order

WB500 - SSC4 - PG39

Ⓐ Connection

Ⓑ Option

Code	Description	
Ⓐ Connection		
Direction		
S	Straight	IN
L	Elbow	IN
S	Straight	OUT
L	Elbow	OUT
Bore size		
C4	ø4	
C6	ø6	

Ⓑ Option		
Panel mounting *3	**Blank**	Without nut
	P	With nut
Pressure range	**Blank**	0.05 to 0.7 MPa (Pressure gauge: G29D-6-P10)
	L	0.05 to 0.35 MPa (Pressure gauge: G39D-6-P04)
Pressure relief	**Blank**	Relief
	N	Non-relief
Pressure gauge *2	**Blank**	With pressure gauge
	T	No pressure gauge (gauge port Rc1/8)
	G39	With pressure gauge (G39D-6-P10)
Flow direction	**Blank**	Standard flow (left → right)
	X1	Reverse flow (right → left)
Drain plug material	**Blank**	Polycarbonate
	Z	Opaque nylon *1

⚠ Precautions for model No. selection

*1: The same material (nylon) as the body is used, so the plug is not transparent.
*2: ø21 0 to 1.0 MPa pressure gauge is standard.
For low pressure, ø27 0 to 0.4 MPa low pressure gauge is provided.
*3: Select option code "P" when mounting on a panel.

[Example of model No.]

WB500-SSC4-PG39

Ⓐ Connection (direction): Both IN and OUT are straight
Port size (Bore size) : ø4
Ⓑ Option : Panel mount
Ⓒ Pressure gauge : ø27 0 to 0.1 MPa Pressure gauge

Option weight

* Add to the weight of the standard accessories.

Panel mount	P	With nut	2 g
Pressure range	L	0.05 to 0.35 MPa	19 g
Pressure gauge	T	No pressure gauge	-12 g(L:-31 g)
	G39	With pressure gauge	19 g

Flow characteristics

● WB500-**C4

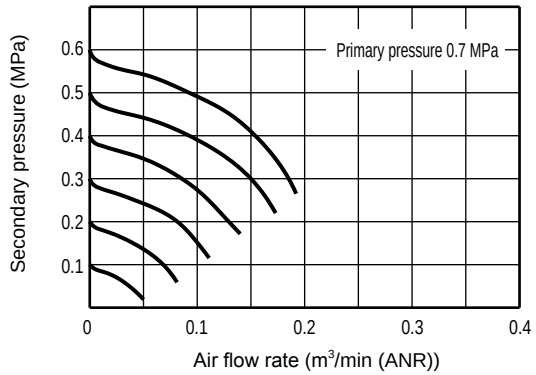

● WB500-**C6

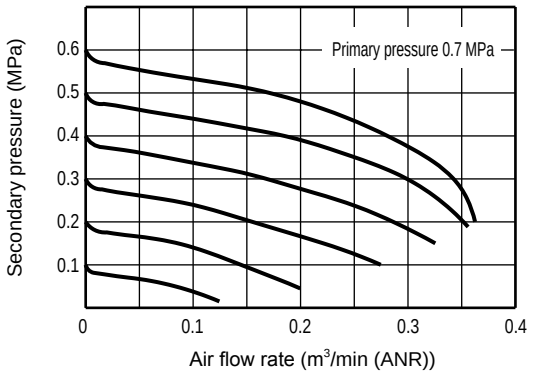

Pressure characteristics

● WB500

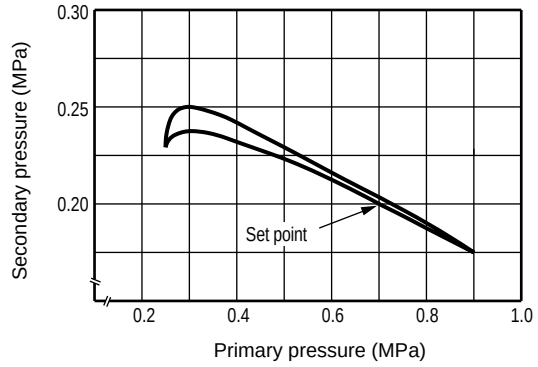

⚠ Safety precautions

■ Precautions for piping

● Do not use this product in an atmosphere containing organic solvents or chemicals, etc., or where the product could come in contact with them.
● Avoid direct exposure to sunlight.
● Avoid using this product where vibration and impact are present.
● Install so that the drain plug faces straight down.
● Avoid use where there are large amounts of drainage. For use, install an air dryer or drain separator on the IN side.
● Flush the pipes carefully before installation.
● Use a CKD soft nylon tube or urethane tube for the piping tubes.
● Do not insert the piping tube at a slant as it could dislocate.
● Securely insert a tube into the push-in fitting before use.
● Turn the pressure adjustment knob clockwise to increase secondary pressure and counterclockwise to lower pressure.
● Check the primary pressure carefully before setting the pressure.
● Stop the primary pressure and release the residual pressure before starting maintenance.
● Mount the pressure gauge with a tightening torque of 3.5 N·m or less.

Internal structure and parts list

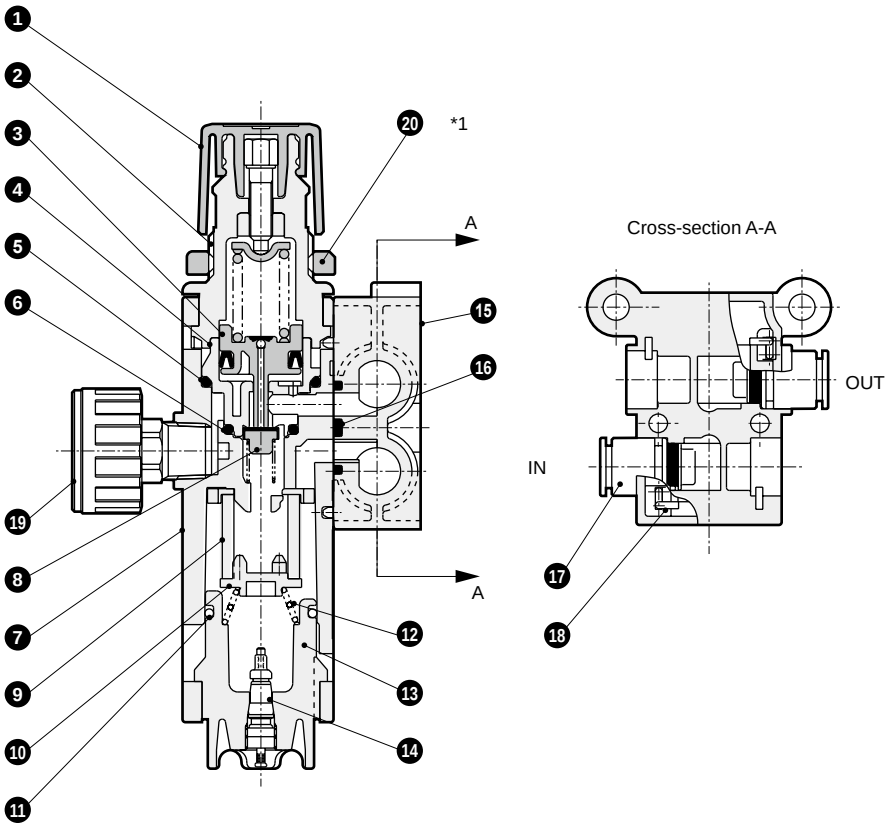

No.	Part name	Material
1	Knob	Polyacetal resin
2	Cover	Polyamide resin
3	Piston assembly	Polyacetal resin, nitrile rubber
4	Piston guide	Polyacetal resin
5	O-ring	Nitrile rubber
6	O-ring	Nitrile rubber
7	Body	Polyamide resin
8	Valve element	Aluminum, hydrogenated nitrile rubber
9	Element	Polypropylene
10	Baffle	Polyacetal resin
11	O-ring	Special nitrile rubber
12	Spring	Stainless steel
13	Drain plug	Polycarbonate resin
14	Valve	
15	Piping block assembly	Polyamide resin/steel
16	Body packing seal	Hydrogenated nitrile rubber
17	Cartridge fitting	
18	Lock pin	Stainless steel
19	Pressure gauge	
20	Mounting nut	Polyacetal resin

*1: A mounting nut is optional. Nut is attached only for option code “P”.

Dimensions

● WB500 axial piping

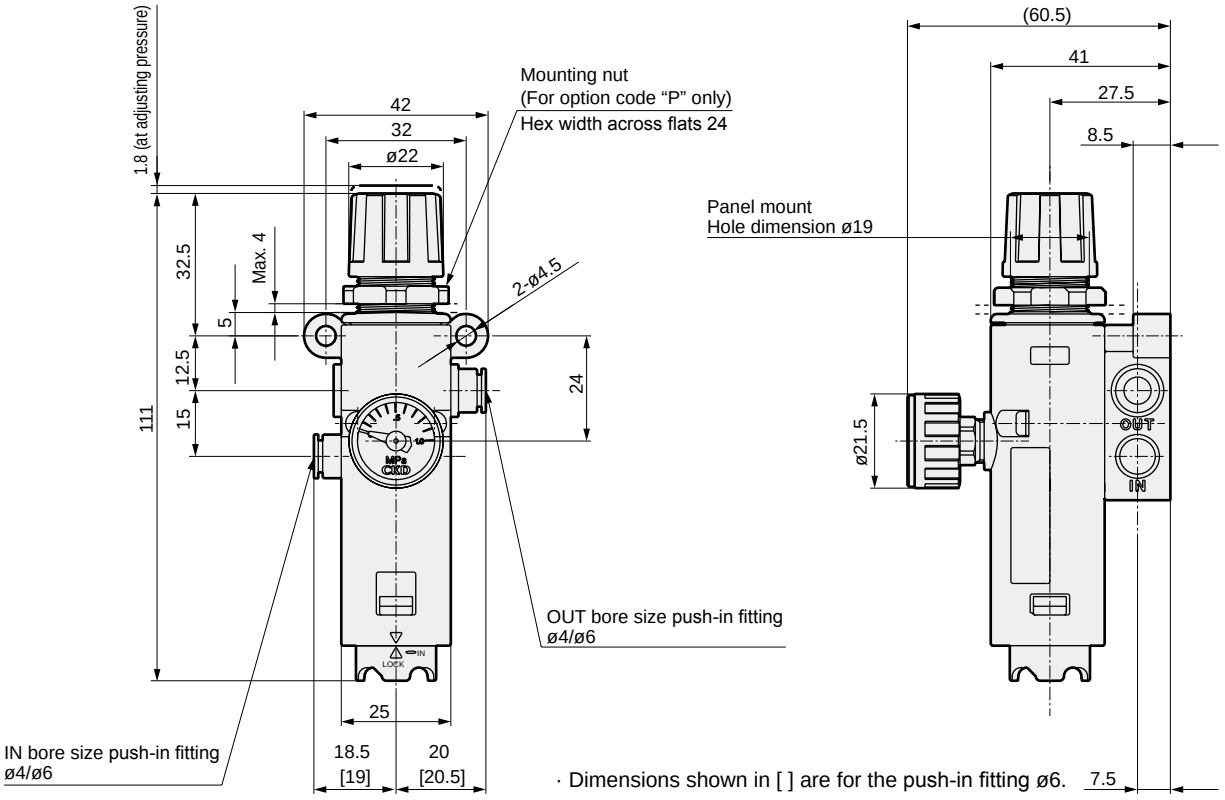

· Dimensions shown in [ ] are for the push-in fitting ø6.

● WB500 elbow piping

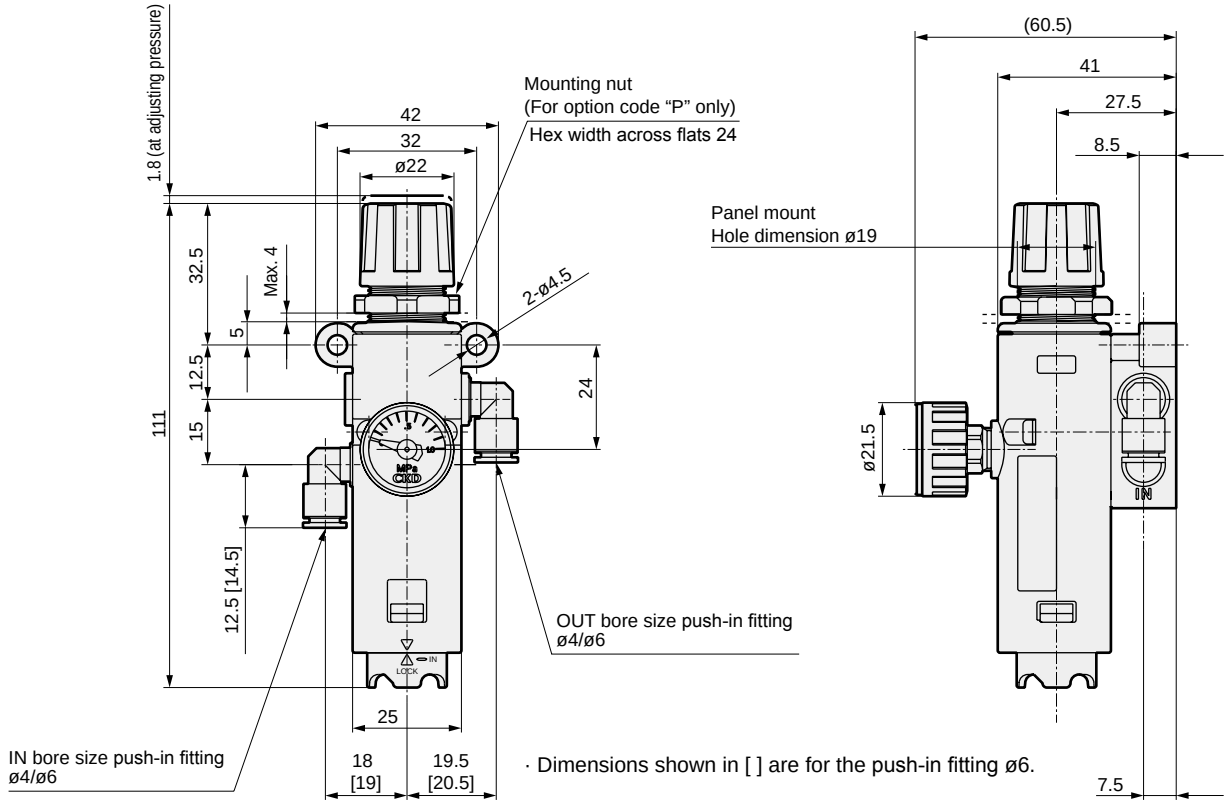

· Dimensions shown in [ ] are for the push-in fitting ø6.

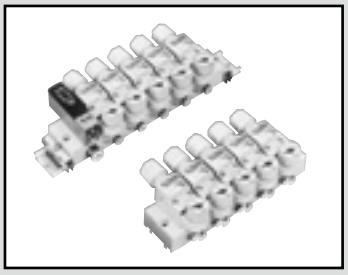

Block manifold regulator

MNRB500 Series

● Port size: Push-in fitting ø4, ø6, ø8

RoHS CAD

JIS symbol

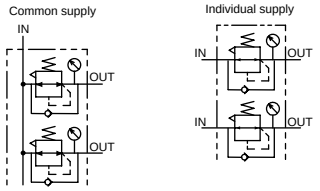

Specifications

Item		MNRB500A	MNRB500B
Working fluid		Compressed air	
Max. working pressure MPa		0.8 (≈120 psi, 8 bar)	
Proof pressure MPa		1.2 (≈170 psi, 12 bar)	
Ambient / fluid temperatures °C		5 (41°F) to 60 (140°F)	
Set pressure MPa		0.05 (≈7.3 psi, 0.5 bar) to 0.7 (≈100 psi, 7 bar) (*1)	
Pressure relief		With relief mechanism	
Port size	IN	Push-in fitting ø6/ø8	Push-in fitting ø4/ø6
	OUT	Push-in fitting: ø4/ø6	
	GAUGE	Rc1/8	
Block manifold weight calculation formula (n: station No.) g		89n+126	91n+94

*1: Low pressure specifications are 0.05 to 0.35.

Option weight

* Add to the weight of the standard accessories. n: Station No.

Unit: g

Code	Fitting + port size IN/OUT						Option			
							Pressure range	Pressure gauge		Mounting method
	SS**	SL**	LS**	LL**	S*	L*	L	T	G39	D
MNRB500A	-	6n	2	6n+2			19n	-12n(L:-31n)	19n	-6n-53
MNRB500B					-	12n	19n	-12n(L:-31n)	19n	-6n-49

Flow characteristics

When using 1 station only and 2 stations simultaneously

● MNRB500A-SSC64 ● MNRB500A-SSC86

● MNRB500B-SSC4 ● MNRB500B-SSC6

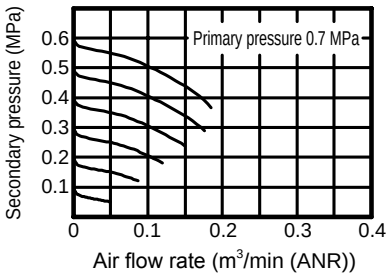

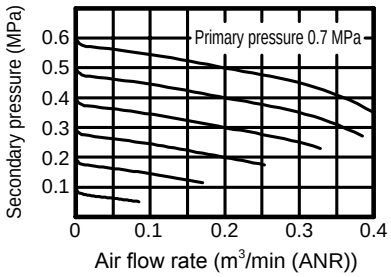

When using 3 stations simultaneously

● MNRB500A-SSC64 ● MNRB500A-SSC86

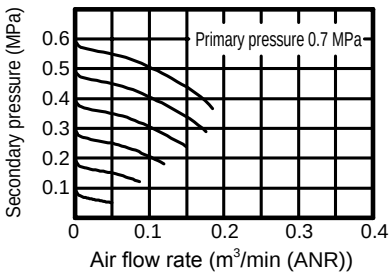

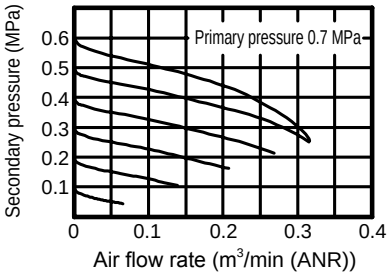

*1: For the common supply, the primary pressure will become insufficient when using multiple stations simultaneously. Install 1 air supply block per three stations. Use an air supply port larger than OUT bore size.

*2: The characteristics for using three stations simultaneously represent the characteristics for the remaining station when the working flow for two of the three stations is 200 ℓ/min.

Pressure characteristics

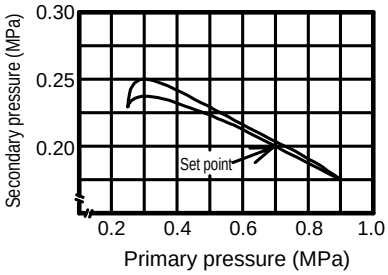

How to order

MNRB500A - SSC64 - 5 - NG39 - D

Ⓐ Model No. *1

Ⓑ Fitting

Ⓒ Port size

Ⓓ Station No. *2

Ⓔ Option *3

Ⓕ Mounting method

Code	Description
Ⓐ Model No.	
MNRB500A	Common supply
MNRB500B	Individual supply
Ⓑ Fitting	
IN direction	
S	Straight
L	Elbow
OUT direction	
S	Straight
L	Elbow

Ⓒ Port size IN/OUT		**MNRB500A**	**MNRB500B**
C64	IN; ø6, OUT; ø4	●	
C66	IN; ø6, OUT; ø6	●	
C84	IN; ø8, OUT; ø4	●	
C86	IN; ø8, OUT; ø6	●	
C4	IN, OUT; ø4		●
C6	IN, OUT; ø6		●

Ⓓ Station No.	
1	1 station
2	2 stations
⋮	⋮
10	10 stations

Ⓔ Option			**MNRB500A**	**MNRB500B**
Pressure range	**Blank**	0.05 to 0.7 MPa (Press.gauge: G29D-6-P10)	●	
	L	0.05 to 0.35 MPa (Press.gauge: G39D-6-P04)	●	
Pressure relief	**Blank**	Relief	●	
	N	Non-relief	●	
Pressure gauge *4	**Blank**	With pressure gauge	●	
	T	No pressure gauge (gauge port Rc1/8)	●	
	G39	With pressure gauge (G39D-6-P10)	●	
Flow direction	**Blank**	Standard flow (left → right)	●	●
	X1	Reverse flow (right → left)	●	

Ⓕ Mounting method	
Blank	DIN rail mount
D	Direct mount

Ozone-proof specifications (Ending Page 15)

MNRB500* – ..... – P11

⚠ Precautions for model No. selection

*1 : The air supply block is one station.
When using three or more stations simultaneously with the common supply, increase one supply block station for every three stations.
Designate with mix manifold specifications sheet.

*2 : Up to five direct mounting stations can be used.

*3 : Options and pressure gauges for each regulator block are the same.

*4 : ø21 0 to 1.0 MPa pressure gauge is standard.
For low pressure, ø27 0 to 0.4 MPa low-pressure gauge is provided.

*5 : When other than basic model specifications, ask CKD to issue the mix manifold specifications sheet on page 405.

Dimensions CAD

● Common supply DIN rail mount
MNRB500A-** C **-*

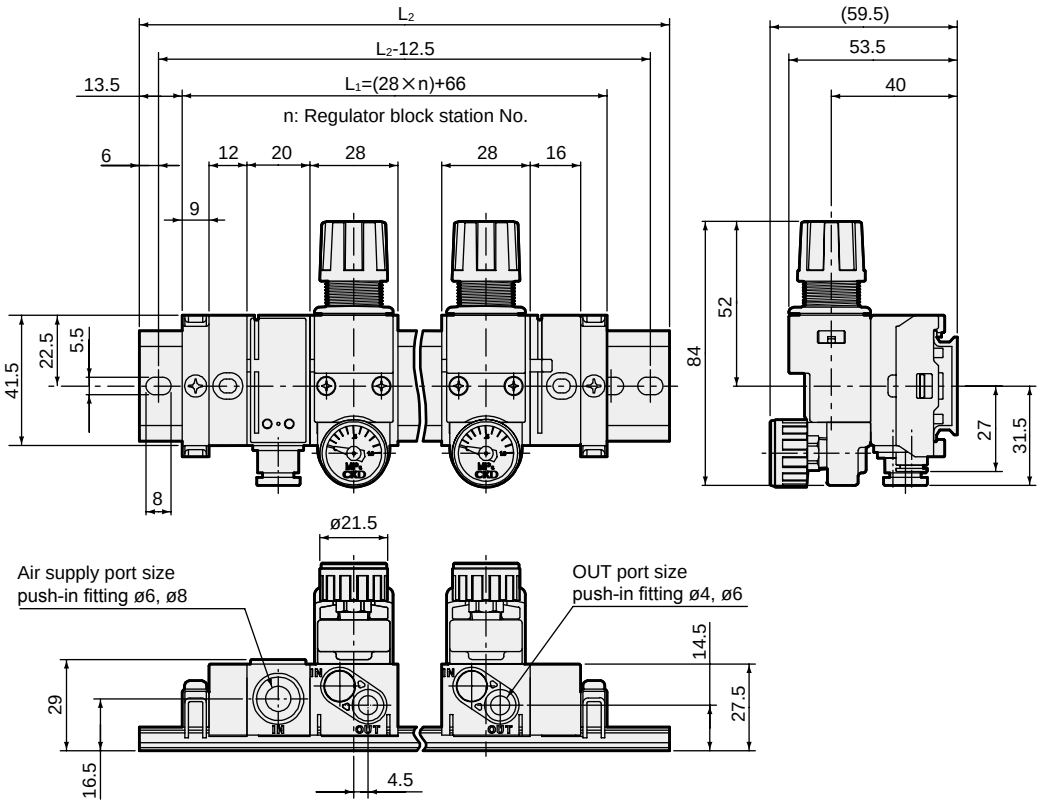

Station No.	L_2 dimension
1	125
2	150
3	175
4	212.5
5	237.5
6	262.5
7	287.5
8	325
9	350
10	375

● Common supply direct mount
MNRB500A-** C **-*-D

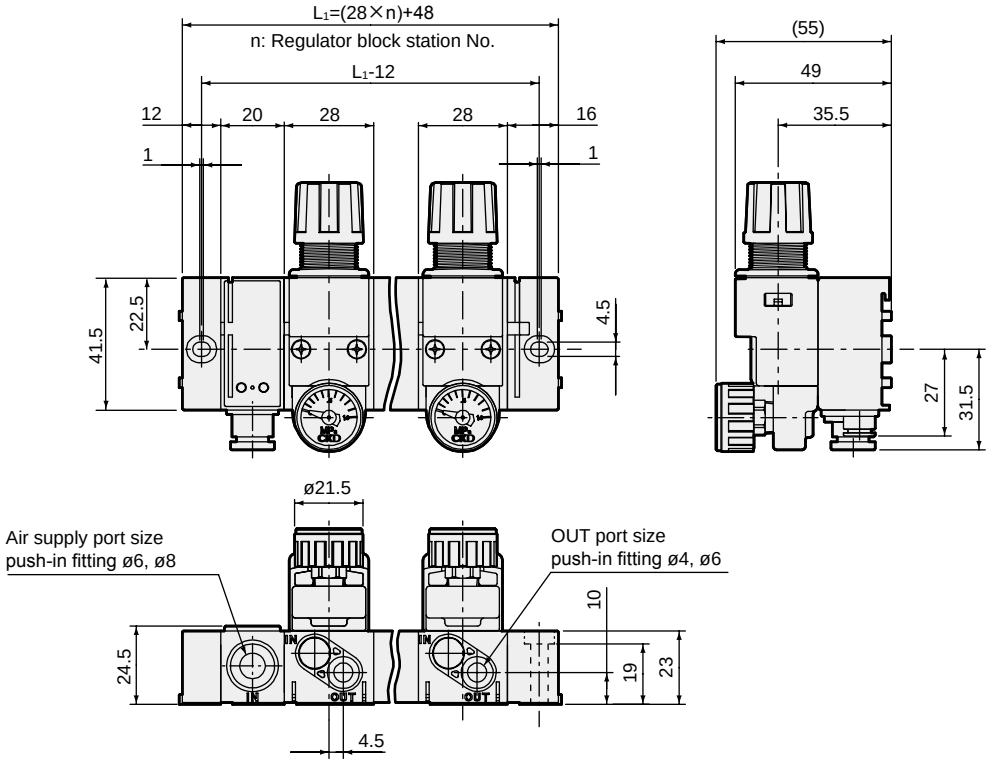

Dimensions

● Individual supply DIN rail mount
MNRB500B-** C *-*

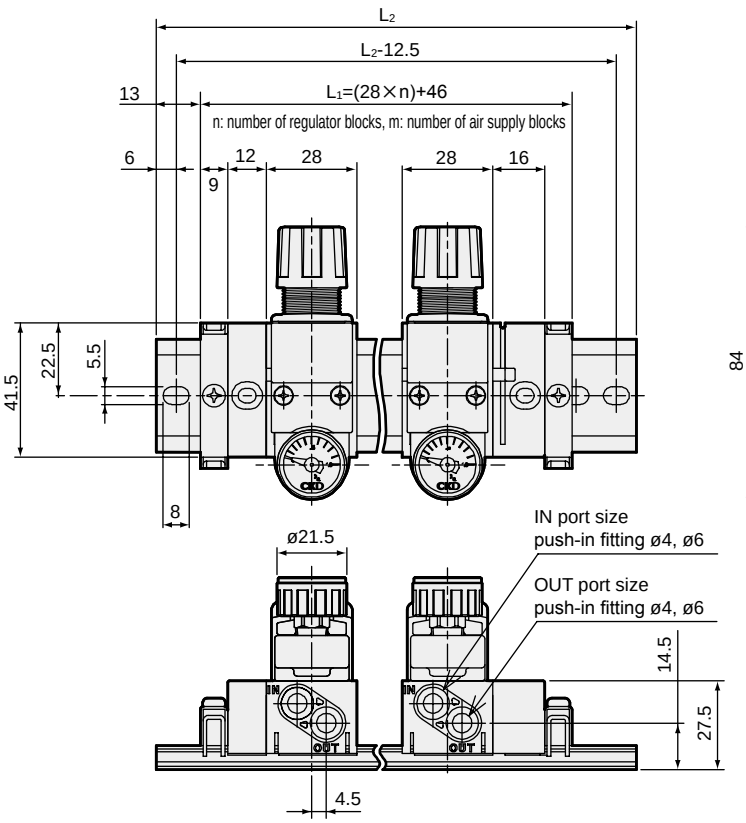

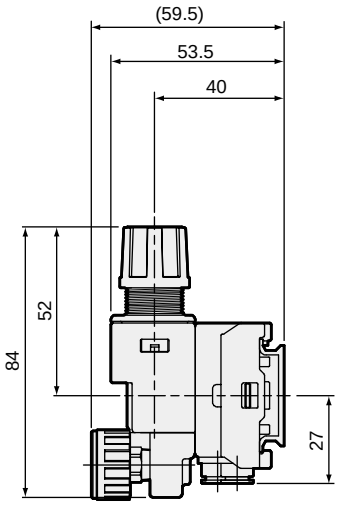

Station No.	L_2 dimension
1	100
2	137.5
3	162.5
4	187.5
5	212.5
6	250
7	275
8	300
9	325
10	362.5

● Individual supply direct mount
MNRB500B-** C *-*-D

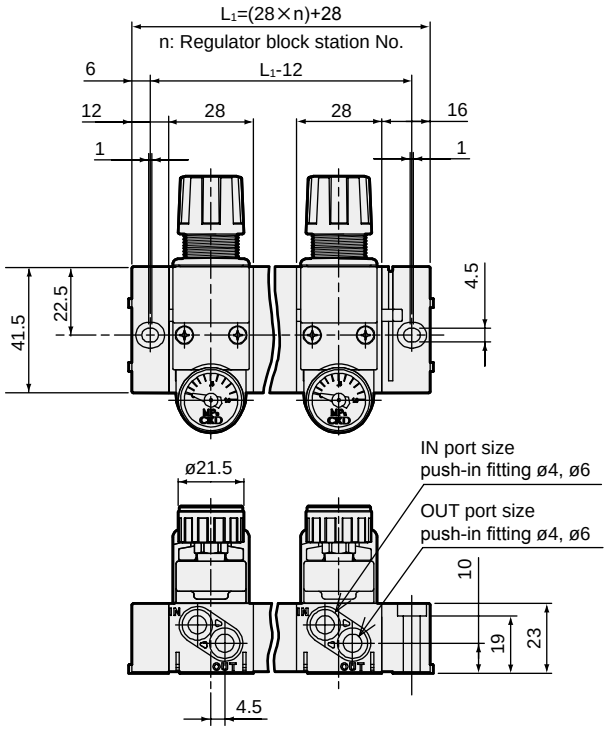

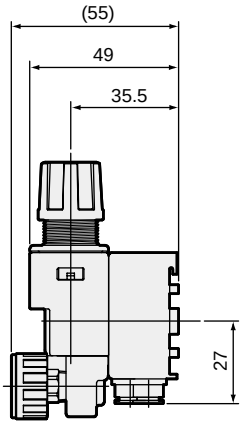

Pressure switch/push-in fitting elbow dimensions

● Air supply block with pressure gauge
NRB500-APS-*C*

Pressure switch APS is integrated into the air supply block. Primary pressure can be controlled.

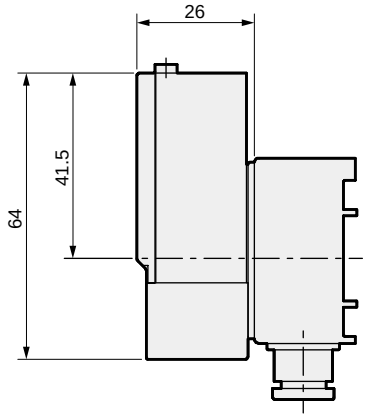

● Air supply block
Push-in fitting elbow
NRB500-NP-LC*

Front or rear piping is possible with air supply port and elbow fitting.

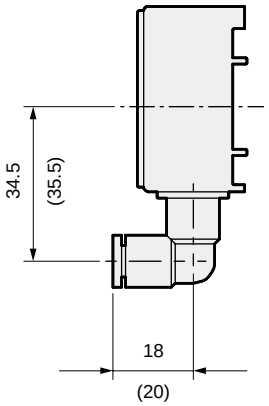

Dimension in ( ) is for C8

● Regulator block
Push-in fitting elbow
NRB500*-**C*

Front or rear piping is possible with IN and OUT ports and elbow fitting.

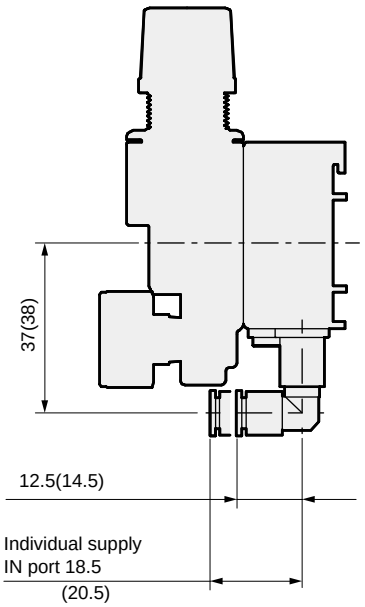

Dimension in ( ) is for C6

MEMO

Regulator block

How to order

NRB500B - SSC4U - NG39

- Ⓐ Model No.
- Ⓑ Connection
- Ⓒ Option

Code			Description
Ⓐ Model No.			
NRB500A			Common supply
NRB500B			Individual supply
Ⓑ Connection			
Direction	***1**	**S**	Straight
	IN	**L**	Elbow
	OUT	**S**	Straight
		L	Elbow
Bore size	**IN-OUT**	**C4**	ø4
		C6	ø6
OUT side piping		**Blank**	IN/OUT bottom piping
		U *2	OUT side top piping
Ⓒ Option			
Pressure range		**Blank**	0.05 to 0.7 MPa (Pressure gauge: G29D-6-P10)
		L	0.05 to 0.35 MPa (Pressure gauge: G39D-6-P04)
Pressure relief		**Blank**	Relief
		N	Non-relief
Pressure gauge *3		**Blank**	With pressure gauge
		T	No pressure gauge (gauge port Rc1/8)
		G39	With pressure gauge (G39D-6-P10)

⚠ Precautions for model No. selection

*1: For common supply, IN port connection is not required.
*2: Applicable only for straight.
*3: ø21 0 to 1.0 MPa pressure gauge is standard. For low pressure, ø27 0 to 0.4 MPa low pressure gauge is provided.

● Common supply straight
Downward piping is possible by using an OUT port and straight fitting.

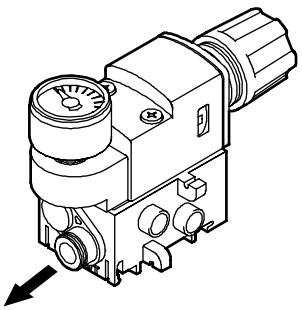

● Common supply elbow
Front or rear piping is possible by OUT port and elbow fitting.

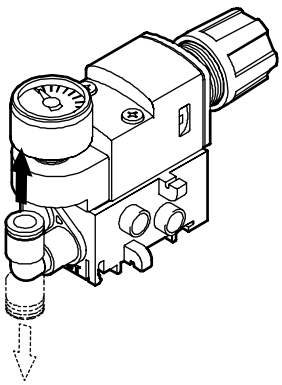

● Individual supply straight
Front or rear piping is possible by using IN and OUT ports and straight fitting.

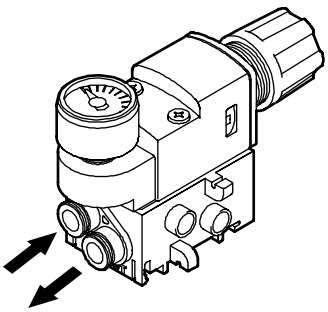

● Individual supply elbow
Front or rear piping is possible with IN and OUT ports and elbow fitting.

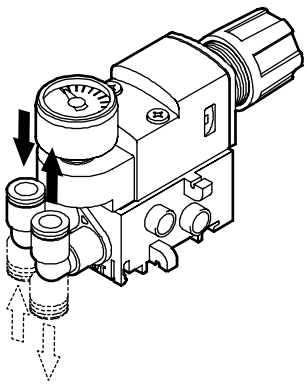

Sub-base

How to order

NRB500A - NS - SSC4 MP

- Ⓐ Model No.
- Ⓑ Connection
- Ⓒ Option

Code			Description
Ⓐ Model No.			
NRB500A			Common supply
NRB500B			Individual supply
Ⓑ Connection			
Direction	*1 IN	S	Straight
		L	Elbow
	OUT	S	Straight
		L	Elbow
Bore size	IN-OUT	C4	ø4
		C6	ø6
OUT side piping		Blank	IN/OUT side bottom piping
		U *2	OUT side top piping
Ⓒ Option			
T			No pressure gauge
Blank			No masking plate
MP			With masking plate

⚠ Precautions for model No. selection

*1: For common supply, IN port connection is not required.
*2: Only for straight.

- Straight for common supply OUT port with straight fitting

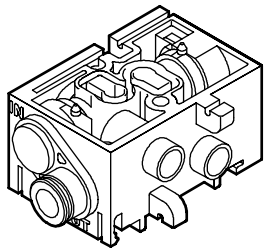

- Elbow for common supply OUT port with elbow fitting

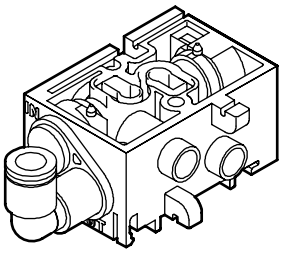

- Straight for individual supply IN and OUT ports with straight fitting

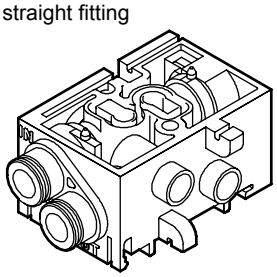

- Elbow for individual supply IN and OUT ports with elbow fitting

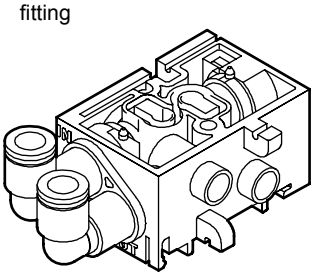

Regulator body

How to order

RB500 - 00 S - NG39

- Ⓐ Connection
- Ⓑ Option

Code		Description
Ⓐ Connection		
S		Discrete (RB500)
M		Manifold (for MNRB500A,B)
Ⓑ Option		
Panel mounting *1	Blank	Without nut
	P	With nut
Pressure range	Blank	0.05 to 0.7 MPa (Pressure gauge: G29D-6-P10)
	L	0.05 to 0.35 MPa (Pressure gauge: G39D-6-P04)
Pressure relief	Blank	Relief
	N	Non-relief
Pressure gauge *2	Blank	With pressure gauge
	T	No pressure gauge (gauge port Rc1/8)
	G39	With pressure gauge (G39D-6-P10)

⚠ Precautions for model No. selection

*1: Indicate option code "P" for panel mounting.
*2: ø21 0 to 1.0 MPa pressure gauge is standard. For low pressure, ø27 0 to 0.4 MPa low pressure gauge is provided.

- Regulator body

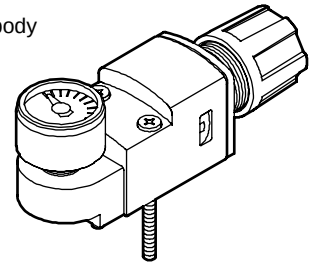

Common supply block

How to order

NRB500-NP-SC6

Ⓐ Connection

Code		Description
Ⓐ Connection		
Direction	S	Straight
	L	Elbow
Bore size	C6	ø6
	C8	ø8

● Straight
Air supply port with straight fitting

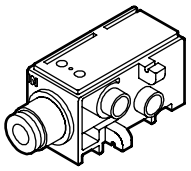

● Elbow
Air supply port with elbow fitting

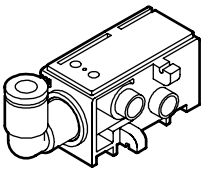

Common supply block with pressure switch

How to order

NRB500-APS-SC6-3

Ⓐ Connection

Ⓑ Lead wire length

Code		Description
Ⓐ Connection		
Direction	S	Straight
	L	Elbow
Bore size	C6	ø6
	C8	ø8
Ⓑ Lead wire length		
	Blank	1 m
	3	3 m
	5	5 m

⚠ Precautions for model No. selection

*1:Submit the mix manifold specifications sheet on page 405 when using the common supply block with pressure switch.

● Straight
Air supply port with straight fitting

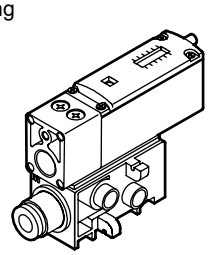

● Elbow
Air supply port with elbow fitting

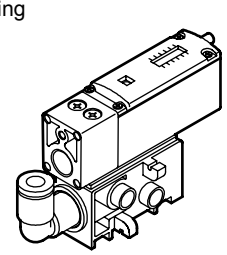

End block

How to order

NRB500-NE (D)

Ⓐ Connection

Code	Description
Ⓐ **Connection**	
Blank	End block R for DIN rail (right)
L	End block L for DIN rail (left)
D	Direct end block R
DL	Direct end block L

● End block R for DIN rail

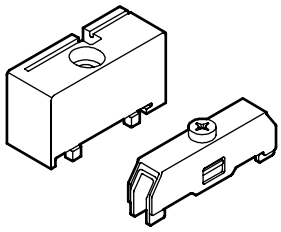

● End block L for DIN rail

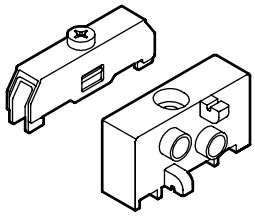

● Direct end block R

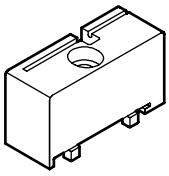

● Direct end block L

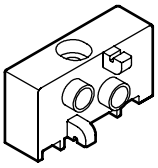

End blocks R and L are required for manifold configuration.
For DIN rail, use end blocks R and L with DIN rail bracket.

DIN rail

How to order

NRB500-BAA (150)

Ⓐ DIN rail dimensions
*1

Code	Description
Ⓐ **DIN rail dimensions**	
125	125 mm
150	150 mm
⋮	⋮

● DIN rail

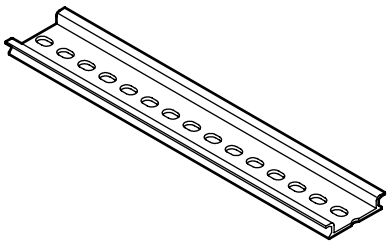

⚠ Precautions for model No. selection

*1: For the DIN rail dimensions, refer to the mix manifold specifications preparation methods, the DIN rail length and manifold dimensions and indicate with mm units.

Push-in cartridge fitting (regulator block)

How to order

NRB500 - **JOINT** - (CL4)

Ⓐ Type

Code	Description	
Ⓐ **Type**		
C4	Straight ø4	
C6	Straight ø6	
CL4	Elbow ø4 (discrete)	
CL6	Elbow ø6 (discrete)	
CLL4	Long elbow ø4 (for manifold)	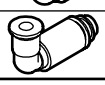
CLL6	Long elbow ø6 (for manifold)	

Cartridge fitting (common supply block)

How to order

NRB500 - Q - JOINT - L6

Ⓐ Type

Code	Description	
Ⓐ Type		
6	Straight ø6	
8	Straight ø8	
L6	Elbow ø6	
L8	Elbow ø8	

Pressure gauge

How to order

G29D - 6 - P10

Ⓐ Model No.

Ⓑ Pressure display

Code	Description
Ⓐ Model No.	
G29D	
G39D	
Ⓑ Pressure display	
P10	0 to 1.0 MPa
P04	0 to 0.4 MPa (G39D only)

Dimensions

● G29D

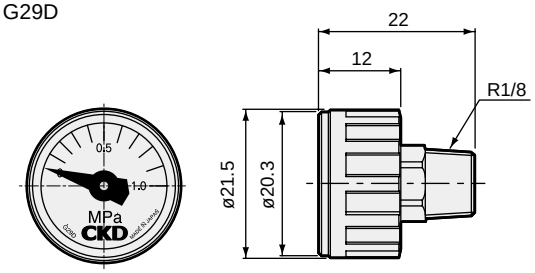

● G39D

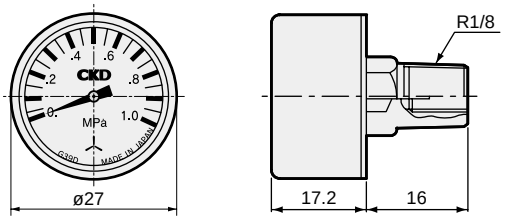

Blanking plug

How to order

GWP 4 - B

Ⓐ Connection

Code	Description
Ⓐ Connection	
4	ø4
6	ø6
8	ø8

Dimensions

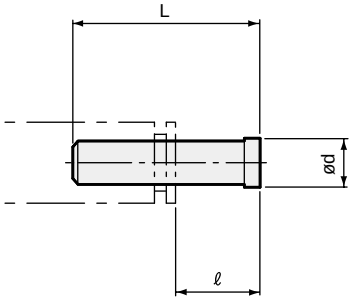

Model No.	Fitting port size ø	L	ℓ	d
GWP 4-B	4	27	11	6
GWP 6-B	6	29	11.5	8
GWP 8-B	8	33	14	10

⚠ Precautions for model No. selection

*1: Sales unit is 10 pieces per unit.

⚠ CAUTION

Disassembling and assembling the block manifold and replacing the cartridge fitting

To change the regulator block when the regulator body or regulator block specifications change or when life has been reached, or when adding an air supply block, use the following procedures to expand, disassemble and assemble parts. Refer to the separate instruction manual for details. Stop the air pressure source supply and release residual pressure before starting disassembly work. After assembling parts, confirm that the lock pin is completely inserted in the coupling groove between blocks before use. When using DIN rail installing, confirm that the DIN rail bracket is securely fixed onto the end block with no gaps. When directly installing without a DIN rail, check that the end block is fixed with screw before use. Air could leak between blocks if the end block is not securely fixed.

Replacing the regulator block and air supply block

(1) When using the DIN rail, loosen the DIN rail bracket fixing screw.
When directly installing without a DIN rail, remove the end block fixing screw.

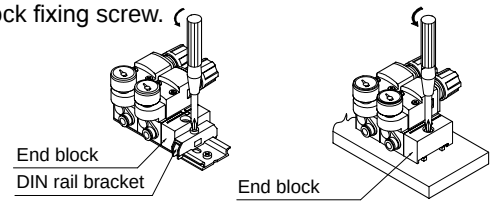

(2) Using a thin-tipped screwdriver, pull out the manifold lock pin coupling the regulator block and air supply block to be replaced.

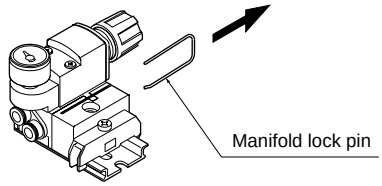

(3) Slide the block to the end block side, and provide a space of 10 mm on each end of the block to be replaced. When installed directly, pull out blocks on both sides.

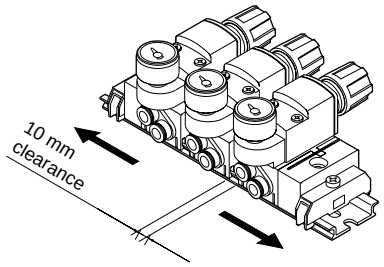

(4) Raise the pressure gauge side and pull the block toward the pressure adjustment knob to remove it from the DIN rail. When the DIN rail brackets on both sides are slid 2 mm or more from the end block, the entire manifold block can be removed.

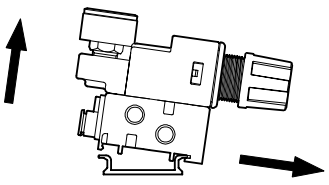

(5) Replace with a new block.
(6) Check that there is no gap between blocks, and then insert the manifold lock pin until it contacts the bottom of the groove.
(7) With reference to the safety precautions and mounting methods, fix the manifold block.

Increasing the regulator and air supply block rows

(1) If there are plans to add more blocks, order DIN rail length to allow for the expansion. If the DIN rail is too short when blocks are added, replace with a DIN rail that accommodates the expansion.

(2) When installing with a DIN rail, fix DIN rail brackets. When directly installing without a DIN rail, fix the end block.

Replacing the cartridge fitting

Replacing the compact regulator

(1) Loosen the screw on the regulator body, and disassemble the piping block.
(2) Using a flathead screwdriver, etc., remove the lock pin inserted onto the top of the sub-base. Replace the cartridge fitting. Confirm that there is no debris, etc., on the fitting's O-ring, and then assemble it in the original position.
Tighten the regulator body tightening screw with a torque of 0.5 to 0.8 N·m.

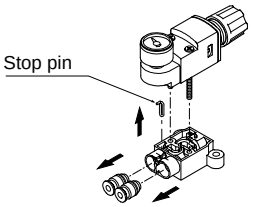

Replacing the block manifold

(1) Disassemble the block following the regulator block and air supply block replacement procedures.
(2) To replace the regulator block's cartridge fitting, loosen the screw on the regulator body, and disassemble the sub-base. Using a flathead screwdriver, etc., remove the lock pin inserted onto the top of the sub-base. Replace the cartridge fitting. Confirm that there is no dirt, etc., on the fitting's O-ring, and then assemble it in the original position.
Tighten the regulator body tightening screw with a torque of 0.5 to 0.8 N·m.

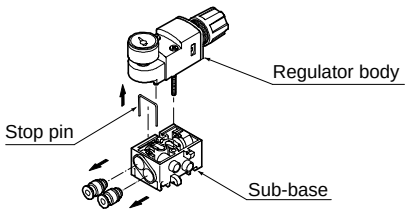

To replace the air supply block cartridge fitting, remove the lock pin inserted on the air supply block side with a flathead screwdriver, etc. Then replace the cartridge fitting.

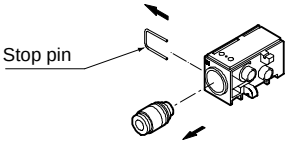

(3) Check that the cartridge fitting is fixed with the lock pin and that it will not come out.

How to fill out mix manifold specifications sheet

● Mix manifold model No.

Refer to pages 398 to 402 for model No. for each component.

MNRB500A - MX - 3 - ○

- Ⓐ Model No.
- Ⓑ Number of regulator blocks
- Ⓒ Installation method

Code	Description
Ⓐ Model No.	
MNRB500A	Common supply
MNRB500B	Individual supply
Ⓑ Number of regulator blocks	
1	1 station
2	2 stations
⋮	⋮
Ⓒ Installation method	
Blank	DIN rail
D *1	Direct mount

⚠ Precautions for model No. selection

*1: The number of stations of direct mount blocks should be within 6 blocks, including regulator and air supply blocks. However, a regulator block is to be 5 stations or less.

*2: Contact CKD if the common supply and the individual supply types are combined.

Configuration	Model No. \ Installation position	1	2	3	4	5	6	7	8	9	10	11	12	13	14	Qty.
End block L	NRB500-NE L	○														1
Common supply block	NRB500-NP-															
Common supply block with APS	NRB500-APS- SC6 - 3		○													1
Regulator block	NRB500 A - SC6			○	○	○										3
	NRB500 -															
	NRB500 -															
	NRB500 -															
	NRB500 -															
	NRB500 -															
	NRB500 -															
	NRB500 -															
Sub-base with masking plate	NRB500 -NS- -MP															
End block R	NRB500-NE						○									1
DIN rail	L_2= 175 mm	Accessory Blanking plug				GWP4-B pcs. / GWP6-B pcs.					GWP8-B pcs.					

● DIN rail length and manifold dimensions

Manifold length L_2: Refer to the table below.

$L=(28\times n)+(20\times m)+28$

n: Number of regulator blocks

m: Number of supply blocks

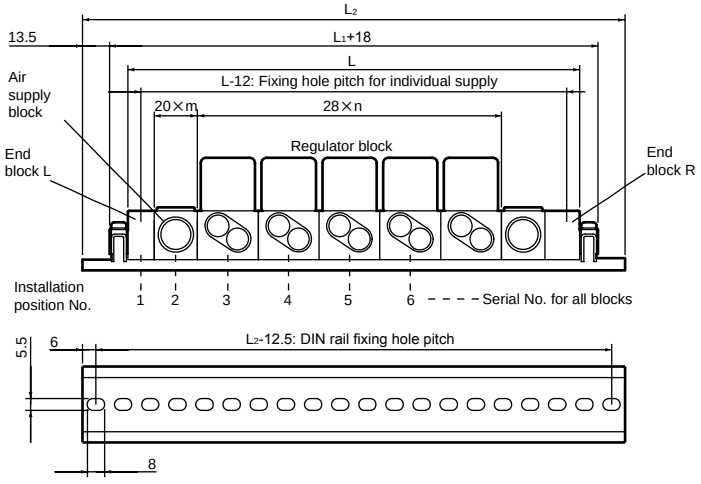

● Common supply Manifold L_2 dimensions

Stn No.	m=1 Dimension	m=2 Dimension	m=3 Dimension
1	125		
2	150		
3	175	200	
4	212.5	225	
5	237.5	262.5	275
6	262.5	287.5	300
7	287.5	312.5	337.5
8	325	337.5	362.5
9	350	375	387.5
10	375	400	412.5

● Individual supply Manifold L_2 dimensions

Stn No.	L_2 Dimension
1	100
2	137.5
3	162.5
4	187.5
5	212.5
6	250
7	275
8	300
9	325
10	362.5

MNRB500 mix manifold specification sheet

Issued / /

Your company name

Contact

Contact

Slip No. Quantity set(s) Delivery date /

Order No.

● Mix manifold model No.

MNRB500 -MX- ○ - ○

Ⓐ Model No.

Ⓑ Number of regulator blocks

Ⓒ Installation method

Code	Description
Ⓐ Model No.	
MNRB500A	Common supply
MNRB500B	Individual supply
Ⓑ Number of regulator blocks	
1	1 station
2	2 stations
⋮	⋮
Ⓒ Installation method	
Blank	DIN rail
D *1	Direct mount

⚠ Precautions for model No. selection

*1: The number of stations of direct mount blocks should be within 6 blocks, including regulator and air supply blocks. However, a regulator block is to be 5 stations or less.
*2: Contact CKD if the common supply and the individual supply types are combined.

● Mix manifold specification

Configuration	Model No. \ Installation position	1	2	3	4	5	6	7	8	9	10	11	12	13	14	Qty.
End block L	NRB500-NE□															
Common supply block	NRB500-NP-□															
Common supply block with APS	NRB500-APS-□-□															
Regulator block	NRB500□-															
	NRB500□-															
	NRB500□-															
	NRB500□-															
	NRB500□-															
	NRB500□-															
	NRB500□-															
	NRB500□-															
Sub-base with masking plate	NRB500□- NS-□-MP															
End block R	NRB500-NE□															
DIN rail *3	L_2=□mm	Accessory Blanking plug				GWP4-B				pcs.	GWP8-B					pcs.
						GWP6-B				pcs.						

*3: Select the DIN rail L_2 dimensions from the L_2 dimensions given on page 404.

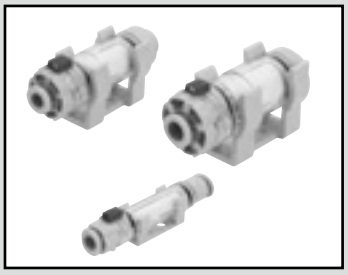

Inline filter

FSL Series

● Port size: ø4 to ø10

JIS symbol



CAD RoHS

Features

● Compact, lightweight and space saving inline
Uses a lightweight, compact resin body.

● Diverse range of model variations
Select the flow rate from 100, 200 or 500 and the port size from ø4, ø6, ø8 or ø10.

● Use either positive or negative pressure
Positive pressure can also be used in the same way as a conventional vacuum inline filter.

● Easy maintenance
Replacing the element is easy as the main body can be removed and attached without tools.

Specifications

Model No. / Item	FSL100		FSL200		FSL500		
Port size mm	ø4	ø6	ø4	ø6	ø6	ø8	ø10
Working fluid	Air						
Operating ambient temperature °C	0 (32°F) to 50 (122°F) (no freezing)						
Max. working pressure MPa	0.8 (≈120 psi, 8 bar) (*1)						
Vacuum working pressure kPa	-100 (≈-15 psi, -1 bar)						
Proof pressure MPa	1.2 (≈170 psi, 12 bar)						
Nominal filtration rating µm	10 (Collection efficiency 95%)						
Filtration area cm^2	4.7		7.5		12.7		
Recommended process flow (*2) ℓ/min(ANR)	10		15	20	25	50	60
Weight g	8	8.5	20.5	21.5	34.5	33.5	39

*1: The max. working pressure is the value at 20°C.
When using in other temperature ranges, refer to the “Relation of working temperature and max. working pressure” on page 408.
*2: Initial flow rate at initial pressure loss 3 kPa or less under negative pressure. When using with positive pressure, refer to the “Flow characteristics” on page 407.

How to order

● Inline filter

FSL **500** - **1010** - **B**

Ⓐ Series
Ⓑ Vacuum side port size - Pad side port size
Ⓒ Included options

Code	Description
Ⓐ Series	
100	FSL100 Series
200	FSL200 Series
500	FSL500 Series
Ⓑ Vacuum side port size - Pad side port size	
44	Push-in fitting ø4 - Push-in fitting ø4
66	Push-in fitting ø6 - Push-in fitting ø6
88	Push-in fitting ø8 - Push-in fitting ø8
1010	Push-in fitting ø10 - Push-in fitting ø10
Ⓒ Included options	
Blank	None
B	Bracket

◆ Series port size combination table

Port size / Model No.	44	66	88	1010
FSL100	●	●		
FSL200	●	●		
FSL500		●	●	●

Not available

Flow characteristics

*The flow characteristics graph gives reference values and does not guarantee the values.

● FSL100-44

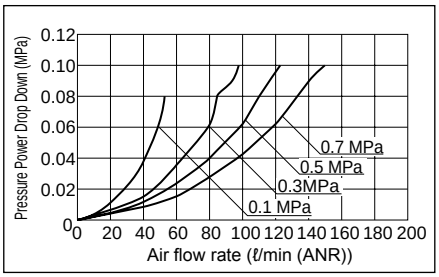

● FSL100-66

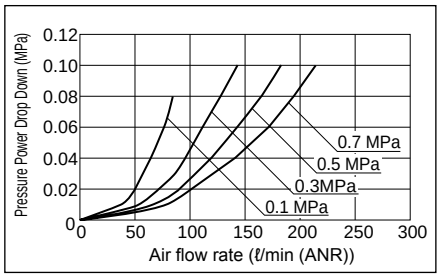

● FSL200-44

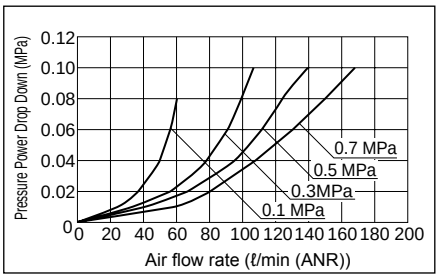

● FSL200-66

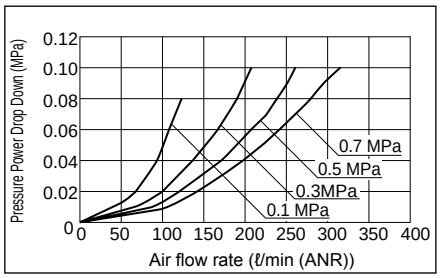

● FSL500-66

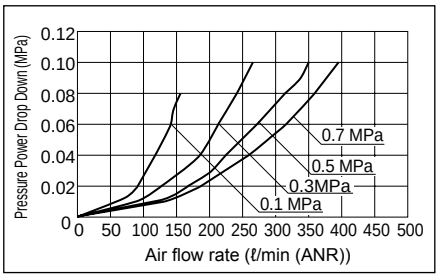

● FSL500-88

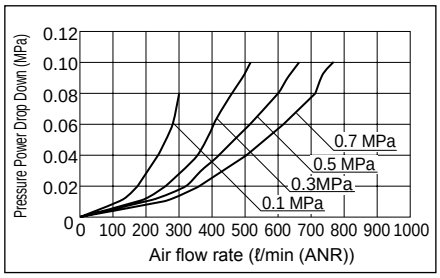

● FSL500-1010

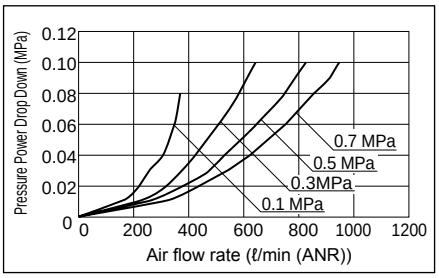

Internal structure and parts list

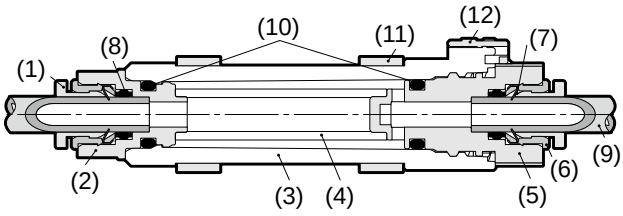

No.	Part name	Material
(1)	Release ring	Acetal resin
(2)	Resin body A	Polybutylene terephthalate resin
(3)	Cover	Polyester resin
(4)	Filter element	Polyvinyl formal resin
(5)	Resin body B	Polybutylene terephthalate
(6)	Guide ring	Copper alloy, electroless nickeling
(7)	Lock claw	Stainless steel
(8)	Elastic sleeve	Nitrile rubber
(9)	Tube	-
(10)	O-ring	Nitrile rubber
(11)	Bracket	Acetal resin
(12)	Slide lock	Acetal resin

● Maintenance part

· Filter element (No. (4))

·Filter element model No.	Compatible model No.	Element size
VSFU-1L-E	FSL100	ø6 × ø4 × L25
FSL200-E	FSL200	ø11 × ø7 × L22
FSL500-E	FSL500	ø15 × ø11 × L27

·Bracket (No. (11))

Bracket model No.	Compatible model No.
FSL100-B	FSL100
VSFU-2-B	FSL200
VSFU-3-B	FSL500

Relation of operating ambient temperature and max. working pressure

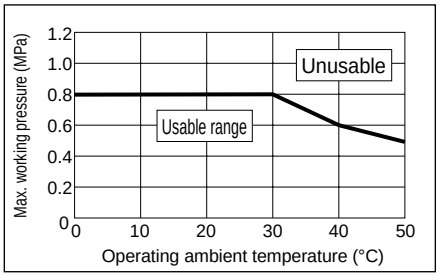

Dimensions

CAD

* The following dimensions shows the state with the enclosed optional bracket mounted.

●FSL100

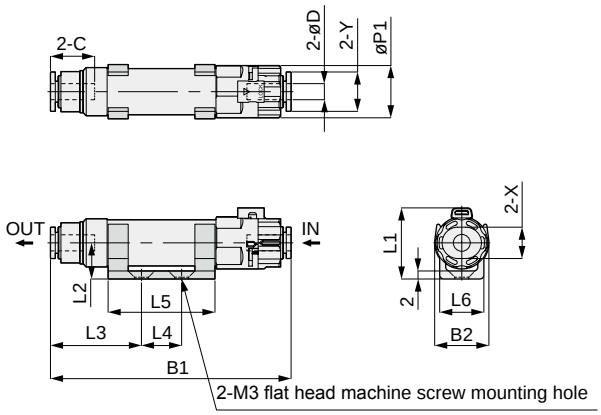

●FSL200, FSL500

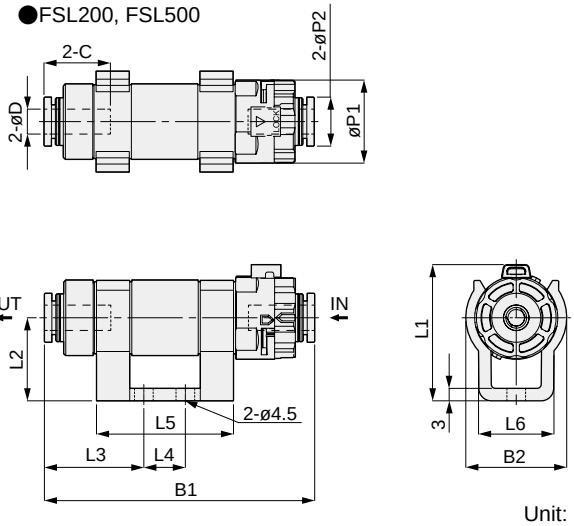

Unit: mm

Type	Tube O.D. øD	C	B1	B2	L1	L2	L3	L4	L5	L6	P1	P2	X	Y
FSL100-44- □	ø4	11.3	60.7	13.5	18	9	23	10	26.6	11	13	-	7.8	9.8
FSL100-66- □	ø6	11.8	64.8	13.5	18	9	25.3	10	26.6	11	13	-	9.8	11.8
FSL200-44- □	ø4	14.9	61.1	24.3	33	20	20.3	10	33	18.2	20	9.9	-	-
FSL200-66- □	ø6	16	65.5	24.3	33	20	24.2	10	33	18.2	20	11.8	-	-
FSL500-66- □	ø6	17	72	28.3	39.6	24	19.6	14	39.5	20.2	25	11.8	-	-
FSL500-88- □	ø8	18.1	71.2	28.3	39.6	24	20.9	14	39.5	20.2	25	13.8	-	-
FSL500-1010- □	ø10	19.2	77.4	28.3	39.6	24	26.8	14	39.5	20.2	25	16.8	-	-

Usage methods

1. Replacing the filter element

(1) Release the filter's inner pressure to the atmosphere.
(2) Release the red slide lock. (In opposite direction from LOCK arrow)
(3) Turn the fitting body 180° counterclockwise.
(4) Remove the turned fitting body from the filter cover and replace the filter element.
(5) If necessary, remove the dust accumulated in the filter cover using compressed air, etc.
(6) Mount the element into the filter element fitting, insert into the main body and turn the fitting body clockwise until it stops.
(7) In the tightened state, confirm that the lock position arrow on the fitting body and the lock position arrow on the filter cover are aligned and then lift the slide lock up (in the direction of the LOCK arrow). Confirm that it is properly locked.

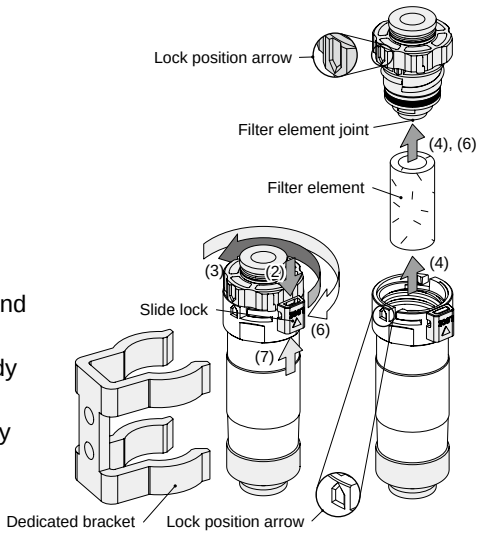

Usage methods

2. Removing and attaching the connection

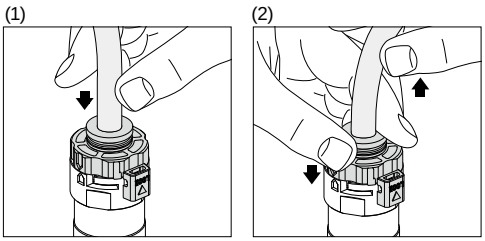

1. Removing and attaching the tube
   (1) Attaching the tube
   With the inline filter FSL (filter with push-in fitting), the locking hook is fixed and the elastic sleeve seals the outer periphery of the tube when the tube is inserted completely to the end.
   (2) Removing the tube
   To remove the tube, press the release ring. The locking hook will open and the tube can be pulled off.
   Always stop the air before removing the tube.

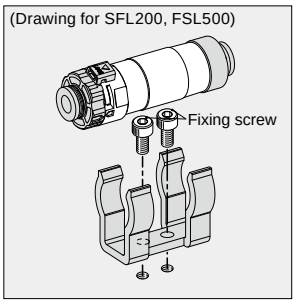

2. Tightening the screw
   (1) Tightening the screw
   Use the fixing hole on the dedicated bracket and fix with the following screws.
   (Refer to the dimensions for the fixing hole pitch.)
   Fixing screw ▶ FSL100: M3 flat head machine screw,
   FSL200, FSL500: M4 screw



F.R.L. kit/set K60570 Series

Filter/regulator/lubricator set K Series.

● Port size: Rc1/8, Rc1/4

JIS symbol 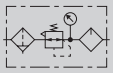

RoHS CAD

Specifications

Item		K60570-1/2C-GB
Port size	Rc	1/8 / 1/4
Max. working pressure	MPa	1.0 (≈150 psi, 10 bar)
Proof pressure	MPa	1.5 (≈220 psi, 15 bar)
Ambient / fluid temperatures	°C	5 (41°F) to 65 (149°F)
Filtration rating	μm	5
Set pressure	MPa	0.04 (≈5.8 psi, 0.4 bar) to 0.83 (≈120 psi, 8.3 bar)
Pressure relief		With relief mechanism
Min. drip flow rate *1	ℓ/min ANR	20
Oil used		Turbine oil Class 1 ISO VG32 (spindle oil cannot be used)
Oil storage capacity	cm^3	25
Weight	kg	0.7
Standard equipment		Pressure gauge (gauge), bracket

*1: The min. drip flow rate is the value at which five drops of oil drip per minute when the primary pressure is 0.5 MPa.

Component list

Item	Port size	Air filter	Regulator	Lubricator	Pressure gauge	Wall bracket
K60570-1C-GB	Rc1/8(6A)	A1019-1C	B2019-1C	A3019-1C	G49D-6-P10	6506
K60570-2C-GB	Rc1/4(8A)	A1019-2C	B2019-2C	A3019-2C	G49D-6-P10	6506

How to order

K60570 — **2C** — **GB**

- K60570: Model No.
- 2C: Ⓐ Port size *1
- GB: Included product Pressure gauge Bracket

Code	Description
Ⓐ Port size	
1C	Rc1/8
2C	Rc1/4

Flow characteristics

● K60570-1/2C-GB Rc1/8 / 1/4

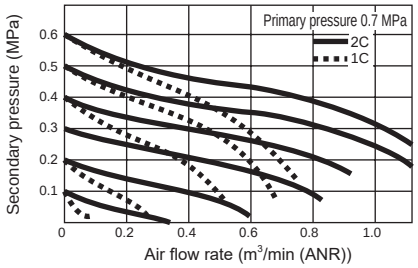

⚠ Precautions for model No. selection

*1 : If port size NPT thread is required, do not indicate nominal size C.
(Example) K60570-2-GB
If a pressure gauge is selected, the NPT thread pressure gauge is enclosed.

*2 : Refer to page 411 for the included "B" bracket. Refer to Related Products (page 363) for the included "G" pressure gauge.

[Example of model No.]

K60570-2C-GB

Model: F.R.L. kit miniature

Ⓐ Port size: Rc 1/4

Internal structure

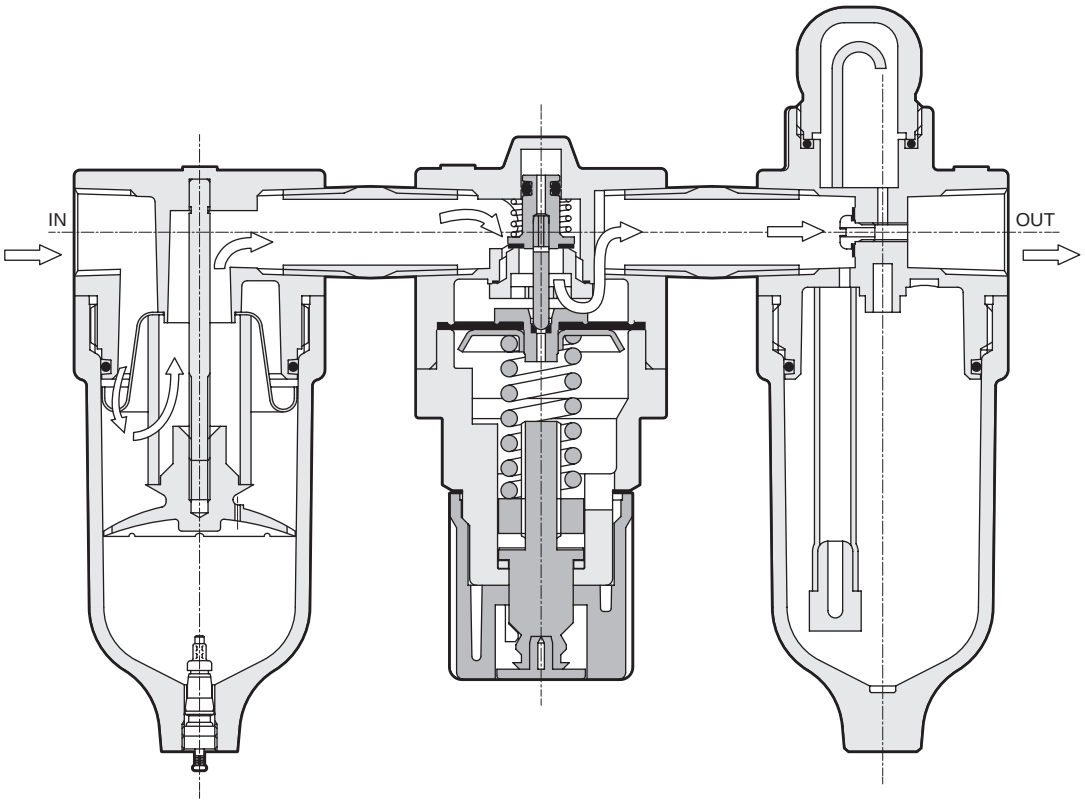

Dimensions CAD

● K60570-1/2C-GB

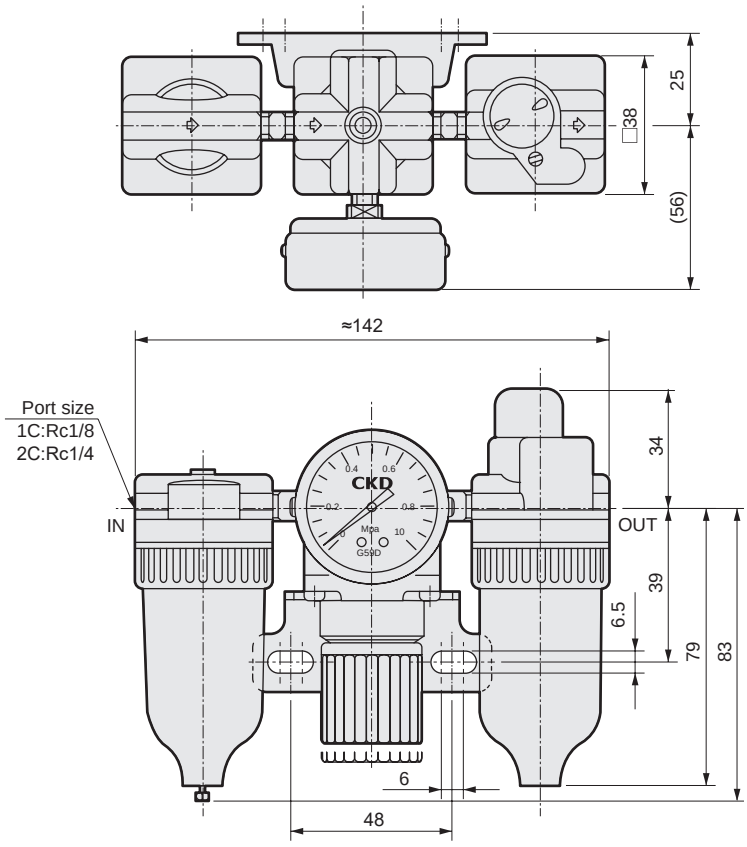

● Wall bracket: 6506
·Material: Steel
Zinc plated
Bracket thickness 2 mm

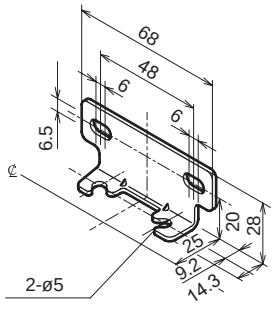

* Tapping screw attached



F.R. unit B7019 Series

Air filter/regulator integrated.

● Port size: Rc1/8, Rc1/4

JIS symbol

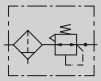

RoHS CAD

Specifications

1 MPa = 10 bar

Item		B7019-1C/2C
Max. working pressure	MPa	1.0 (≈150 psi, 10 bar)
Proof pressure	MPa	1.5 (≈220 psi, 15 bar)
Ambient / fluid temperatures	°C	5 (41°F) to 65 (149°F)
Filtration rating	μm	5
Set pressure	MPa	0.04 (≈5.8 psi) to 0.83 (≈120 psi)
Pressure relief		With relief mechanism
Port size	Rc	1/8 / 1/4
Weight	kg	0.4
Bowl guard		Made to order

*1: When a piston drain (D) is used, min. working pressure is 0.1 MPa. Do not use this device on equipment that experiences impacts.

Flow characteristics

● B7019-1/2C Rc1/8 / 1/4

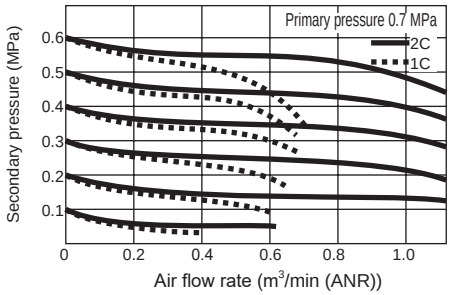

Pressure characteristics

● B7019

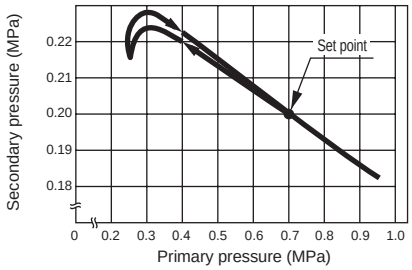

How to order

B7019 – 2C – DZNGB

Ⓐ Port size *1

Ⓑ Option *2 *3 *4 *5 *6

[Example of model No.]

B7019-2C-DZNGB

Model: F.R unit miniature

Ⓐ Port size: Rc 1/4

Ⓑ Option: Piston drain, nylon bowl, non-relief, pressure gauge included, bracket included

Code		Description
Ⓐ Port size		
1C		Rc1/8
2C		Rc1/4
Ⓑ Option		
Drain discharge	**Blank**	Tire valve
	D	Piston drain
Bowl material	**Blank**	Polycarbonate bowl
	Z	Nylon bowl
	M	Metal bowl
	Q	Polycarbonate bowl with bowl guard
Element	**Blank**	5 μm
Regulator	**Blank**	Standard
	N	Non-relief
	L	For low pressure (0.02 to 0.34 MPa)
Included product	**Blank**	Not included
	G	Pressure gauge (G49D-6-P10)
	B	Bracket (6166)

⚠ Precautions for model No. selection

*1 : If port size NPT thread is required, do not indicate nominal size C.
(Example) B7019-1: If a pressure gauge is selected, the NPT thread pressure gauge is enclosed.

*2 : Two or more codes can be selected per “Regulator” and “Included product”.

*3 : When selecting the bowl material “M” and the enclosed product “G”, specify “M-G”.

*4 : If the pressure gauge is “L” for low-pressure, G49D-6-P04 is enclosed.
Refer to related products (page 363) for pressure gauge specifications.

*5 : Pressure gauge for “LG” is 0 to 0.4 MPa.

*6 : Refer to page 413 for the included “B” bracket.

Option weight

* Add to the weight of the standard accessories.

Unit: kg

	Drain discharge	Bowl material			Pressure gauge	Bracket
Code	**D**	**Z**	**M**	**Q**	**G**	**B**
B7019	0	0	0.08	0.03	0.086	0.03

Internal structure and parts list

● B7019

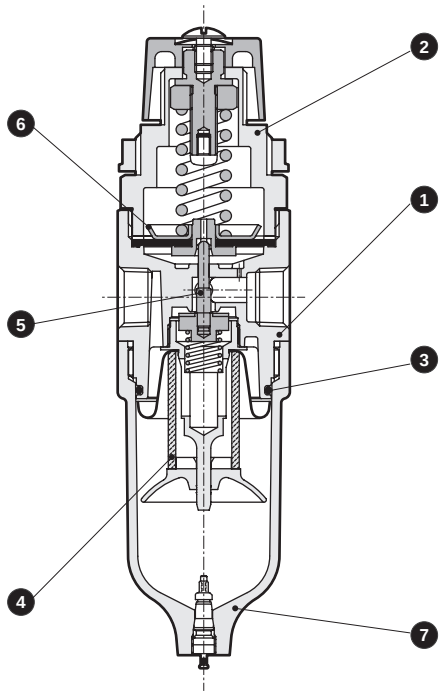

No.	Part name	Material
1	Body	Aluminum alloy die-casting
2	Cover	Polyacetal resin
3	O-ring	Special nitrile rubber
4	Element	Polypropylene
5	Valve assembly	Copper alloy/hydrogenated nitrile rubber
6	Diaphragm assembly	Nitrile rubber/copper alloy/steel
7	Bowl	Polycarbonate resin/copper alloy

Repair parts list

No.	Part name		B7019
4	Element		A1019-ELEMENT
5	Valve assembly		B7019-VALVE-ASSY
6	Diaphragm assembly	Relief	B7019-DIAPHRAGM-ASSY
		Non-relief	B7019-DIAPHRAGM-ASSY-N

Dimensions CAD

● B7019

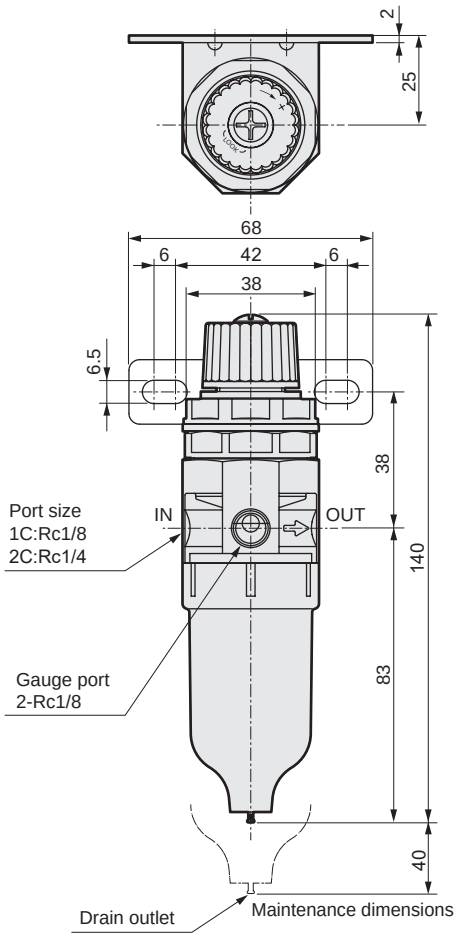

● Wall bracket: 6166
· Material: Steel
Zinc plated
Bracket thickness 2 mm

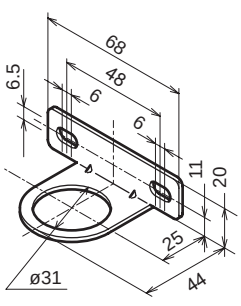



Air filter A1019 Series

Filtration 5 μm

● Port size: Rc1/8, Rc1/4

JIS symbol



RoHS CAD

Specifications

Item		A1019
Working fluid		Compressed air
Max. working pressure	MPa	1.0 (≈150 psi, 10 bar)
Proof pressure	MPa	1.5 (≈220 psi, 15 bar)
Ambient / fluid temperatures	°C	5 (41°F) to 65 (149°F)
Filtration rating	μm	5
Port size	Rc	1/8 / 1/4
Weight	kg	0.1
Bowl guard		Made to order

*1: When a piston drain (D) is used, make use of 0.1 MPa or more. Do not use this device on equipment that experiences impacts.

Option weight

* Add to the weight of the standard accessories.

Unit: kg

	Drain discharge	Bowl material		Bracket
Code	D	Z	M	B
A1019	0	0	0.08	0.035

Flow characteristics

● A1019-1C Rc1/8

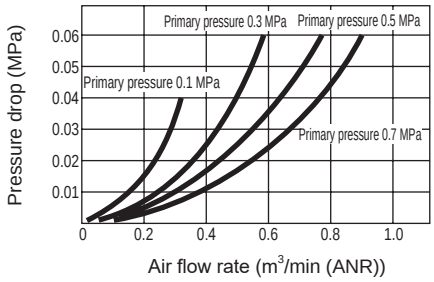

● A1019-2C Rc1/4

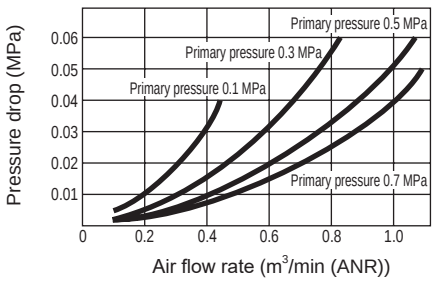

How to order

A1019 – 2C – DZB

- A Port size *1
- B Option *2

Code		Description
A Port size		
1C		Rc1/8
2C		Rc1/4
B Option		
Drain discharge	**Blank**	With tire valve
	D	Piston drain
Bowl material	**Blank**	Polycarbonate bowl
	Z	Nylon bowl
	M	Metal bowl
Element	**Blank**	5 μm
Accessories	**Blank**	Not included
	B	Bracket

[Example of model No.]

A1019-2C-DZB

Model: Air filter miniature

APort size…Rc1/4

BOption…Piston drain, Nylon bowl, bracket attached

Precautions for model No. selection

*1: If port size NPT thread is required, do not indicate nominal size C. (Example) A1019-1

*2: Refer to the following for the included "B" bracket.

Internal structure and parts list

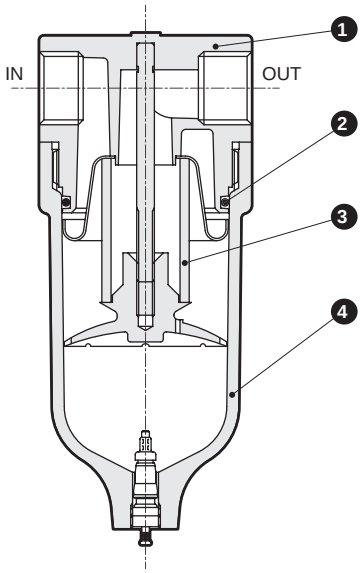

No.	Part name	Material
1	Cover	Zinc alloy die-casting
2	O-ring	Special nitrile rubber
3	Element	Polypropylene
4	Bowl	Polycarbonate resin/Brass

Consumable parts list

No.	Part name	Model No.
4	Element	A1019-ELEMENT

Dimensions CAD

● A1019-1C, 2C

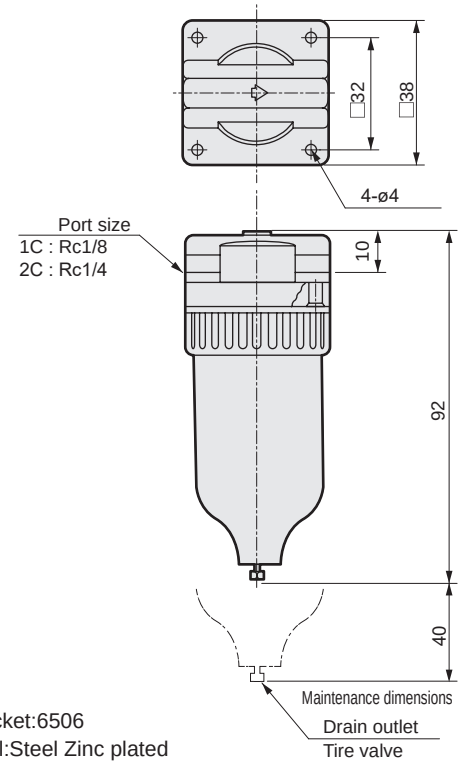

● Wall bracket:6506

・Material:Steel Zinc plated

Bracket thickness 2 mm

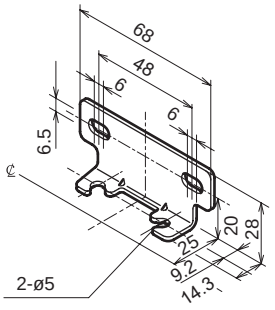

* Tapping screw attached



Micro alescer/micro naught (oil removal)

1219 Series

Oil content is to be 0.1 PPM w/w or less. (Measurement/instrumentation and high-grade coating)

● Port size: Rc1/4

JIS symbol 

RoHS CAD

Specifications

Item		1219-2C
Working fluid		Compressed air
Max. working pressure	MPa	1.0 (≈150 psi, 10 bar)
Proof pressure	MPa	1.5 (≈220 psi, 15 bar)
Ambient / fluid temperatures	°C	5 (41°F) to 54 (129.2°F)
Oil removal		0.1 PPM w/w (for inlet air temperature 30°C)
Max. flow rate	m^3/min(ANR)	0.056
Port size	Rc	1/4
Weight	kg	0.3
Mantle quantity		1
Mantle assembly model No. (A set of mantle and either O-ring for sealing or gasket)		1219-MANTLE-ASSY

*1 : Max. flow rate is the atmospheric pressure conversion value where the inlet air pressure is 0.7 MPa and the initial pressure drop is 0.01 MPa.

*2 : The mantle assembly number indicates the part number that combines the mantle discrete number and O-ring number (parts list (4) on the following page).

Flow characteristics

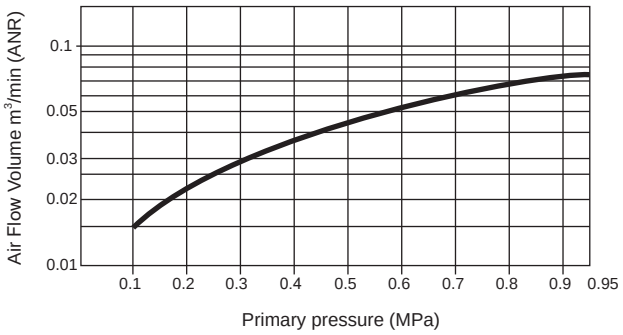

Option weight

* Add to the weight of the standard accessories. Unit: kg

	Bowl material		Bracket
Code	Z	M	B
1219	0	0.08	0.035

How to order

1219 – **2C** – **ZB**

Ⓐ Model No.

Ⓑ Port size *1

Ⓒ Option *2

Code		Description
Ⓑ Port size		
2C		Rc1/4
Ⓒ Option		
Drain disch	Blank	With tire valve
Bowl material	Blank	Polycarbonate bowl
	Z	Nylon bowl
	M	Metal bowl
Included product	Blank	Not included
	B	Bracket

[Example of model No.]

1219-2C-ZB

Model: Micro alescer/
micro naught (oil removal)

Ⓑ Port size: Rc 1/4

Ⓒ Option...Nylon bowl, bracket included

⚠ Precautions for model No. selection

*1 : If port size NPT thread is required, do not indicate nominal size C. (Example) 1219-2

*2 : Refer to page 417 for the included “B” bracket.

Internal structure and parts list

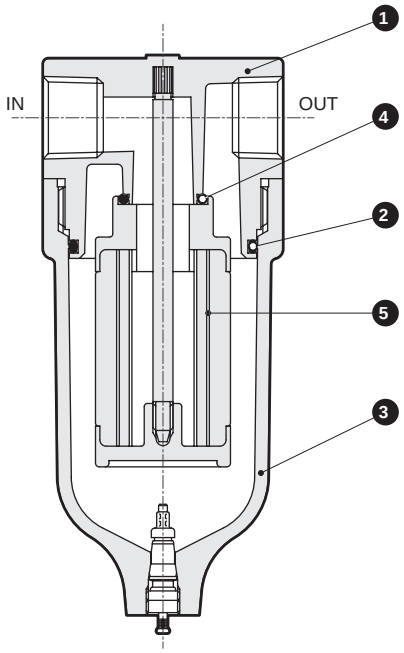

No.	Part name	Material
1	Cover	Zinc alloy die-casting/Brass
2	O-ring	Special nitrile rubber
3	Bowl	Polycarbonate resin/Brass
4	O-ring	Nitrile rubber
5	Mantle	-

Dimensions CAD

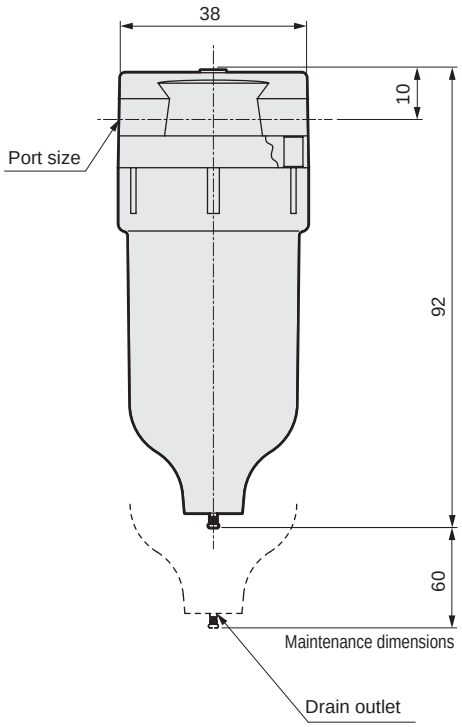

● Wall bracket: 6506
·Material: Steel Zinc plated
Bracket thickness 2 mm

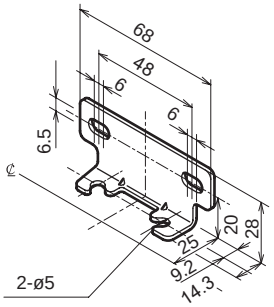

* Tapping screw attached

Internal structure of mantle

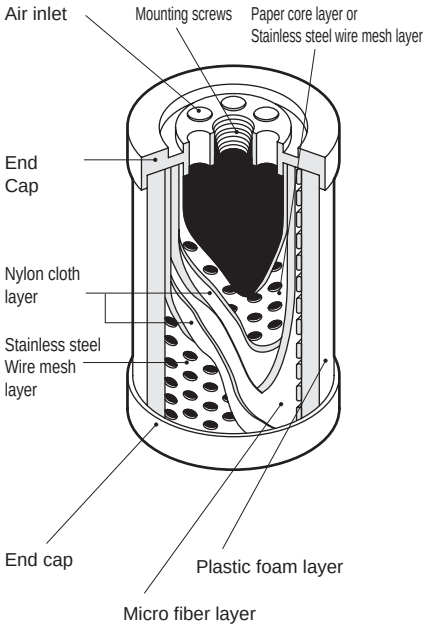

99% of oil particles in the compressed air are in the aerosol state. These aerosols (0.8 to 0.01 µm particles) cannot be captured by 3 µm/5 µm elements, or other mechanical methods. Micro alescer/micro naught is an air filter that removes aerosols effectively. The biggest factor for achieving this efficiency is the micro fiber layer. Borosilicate fibers (glass fibers) are used in the micro fiber layer. The many random fine fibers in this layer capture oil aerosols by direct collision, inertial collision, contacting and adhesion, or diffusion (Brownian motion) and cohesion by diffusion. The oil aerosols then form droplets. The plastic foam layer on the mantle exterior prevents redispersion through air flow of the large liquid drops which are formed by cohesion of oil particles captured in the micro fiber layer. At the same time, the liquid droplets sink due to gravity in this plastic foam layer. The micro fiber layer and plastic foam layer capture and cohere oil particles and separate oil in the compressed air. If sulfur dioxide or chlorine gas is contained in the compressed air, they will enter the plastic foam layer. Also, it will swell due to organic compounds such as hydrocarbons, chlorinated hydrocarbons, ketones, aldehydes, amines, etc. Exercise caution during use.

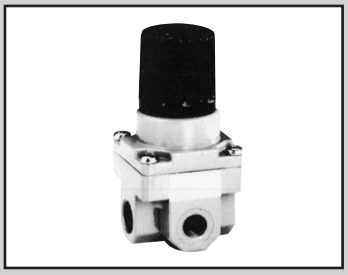

Regulator

B2019 Series

● Port size: Rc1/8, Rc1/4

JIS symbol 

RoHS CAD

Specifications

1 MPa = 10 bar

Item		B2019-1C/2C
Working fluid		Compressed air
Max. working pressure	MPa	2.06 (≈300 psi, 20.6 bar)
Proof pressure	MPa	3.09 (≈450 psi, 30.9 bar)
Ambient / fluid temperatures	°C	5 (41°F) to 65 (149°F)
Set pressure	MPa	0.04 (≈5.8 psi) to 0.83 (≈120 psi)
Pressure relief		With relief mechanism
Port size	Rc	1/8 / 1/4
Weight	kg	0.2

Ozone-proof specifications (Ending Page 16)

B2019 – ..... – P11

Option weight

* Add to the weight of the standard accessories. Unit: kg

	Panel mount	Pressure gauge	Bracket
Code	P	G	B
B2019	0	0.086	0.035

Flow characteristics

● B2019-1C/2C Rc1/8 / 1/4

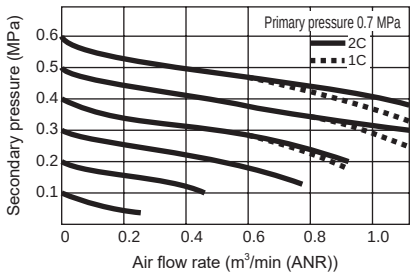

Pressure characteristics

● B2019

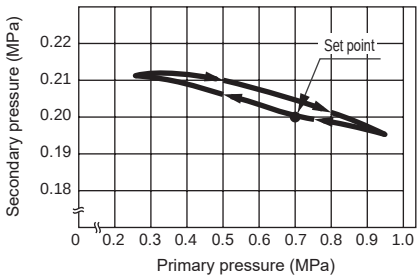

How to order

B2019 – 2C – NPB

Model No.

Ⓐ Port size *1

Ⓑ Option *2 to 5

Code		Description
Ⓐ Port size		
1C		Rc1/8
2C		Rc1/4
Ⓑ Option		
Regulator	Blank	Standard
	N	Non-relief
	L	Low pressure (0.02 to 0.34 MPa)
	P	Panel mount
Included product	Blank	Not included
	G	Pressure gauge
	B	Bracket

[Example of model No.]

B2019-2C-NPB

Model: Regulator

Ⓐ Port size: Rc 1/4

Ⓑ Option: Non-relief, panel mount, bracket included

⚠ Precautions for model No. selection

*1 : If port size NPT thread is required, do not indicate nominal size C. (Example) B2019-1
If a pressure gauge is selected, the NPT thread pressure gauge is enclosed.

*2 : Options can be combined.

*3 : If option codes “B” and “G” are indicated, a pressure gauge and a bracket are enclosed.
The pressure gauge supplied is G49D-6-P10 (G49D-6-P04 for low pressure). Refer to related products (page 363) for pressure gauge specifications.

*4 : If option B (bracket) is selected, a 6506 bracket is enclosed, while if PB (bracket for panel mount) is selected, a 6166 bracket is enclosed. Refer to page 419 for the included product “B” bracket.

Internal structure and parts list

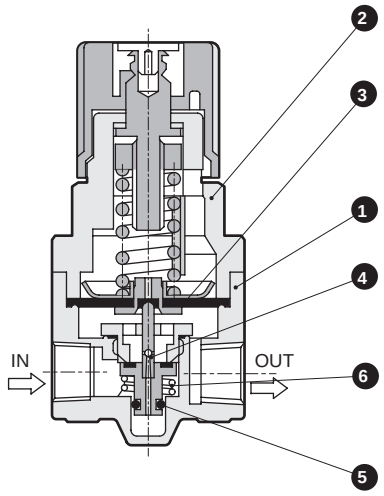

No.	Part name	Material
1	Body	Zinc alloy die-casting
2	Cover	Zinc alloy die-casting
3	Diaphragm assembly	Nitrile rubber, zinc alloy die-casting, steel
4	Valve assembly	Brass/hydrogenated nitrile rubber
5	O-ring	Nitrile rubber
6	Bottom spring	Stainless steel
7	O-ring	Nitrile rubber
8	Bottom plug	Zinc alloy die-casting

Consumable parts list

No.	Part name		Model No.
3	Diaphragm assembly	Relief	**B2019-DIAPHRAGM-ASSY**
		Non-relief	**B2019-DIAPHRAGM-ASSY-N**
4 5	Valve assembly		**B2019-VALVE-ASSY**

Functions

(1) Adjusting screw
Adjusting screw to adjust secondary pressure is turned clockwise to increase pressure.

(2) Relief valve
If the secondary pressure becomes higher than the set pressure, the valve stem and diaphragm section separate to release compressed air to the atmosphere from the relief valve, preventing the secondary side set pressure from increasing abnormally.

(3) Diaphragm
The balance between the force of the pressure adjusting spring and the force applied to the diaphragm bottom (secondary side pressure) is maintained and the valve system is opened and closed to supply accurate and stable pressure (set pressure) to the secondary side.

(4) Valve system
If the diaphragm and the pressure adjustment spring lose balance, the compressed air on the primary side is supplied as required to the secondary side. A valve with a large bore size is used to achieve excellent flow characteristics.

(5) Gauge port
A gauge port is placed near the OUT side from the center section to measure the secondary side pressure accurately. Two gauge ports are provided.

Dimensions

● B2019

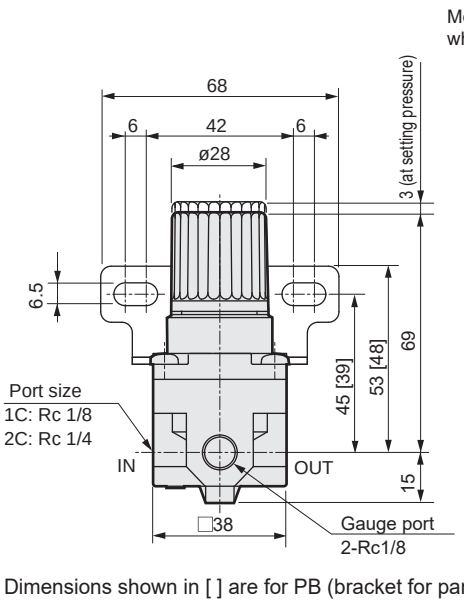

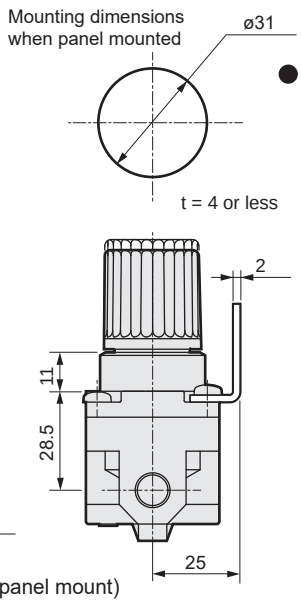

● Wall bracket:6506
・Material:Steel Zinc plated
Bracket thickness 2 mm

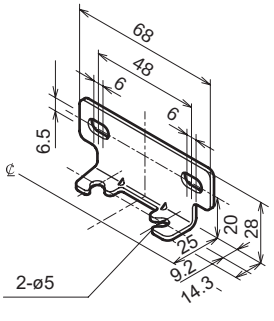

● Wall bracket:6166
・Material:Steel Zinc plated
Bracket thickness 2 mm

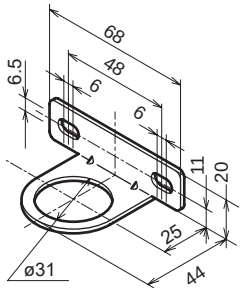

* Tapping screw attached

Dimensions shown in [ ] are for PB (bracket for panel mount)



Reverse regulator (check valve integrated)

2419 Series

Smooth discharge of secondary pressure with check valve.
No bypass circuit required and easy piping.

● Port size: Rc1/8 to Rc1/4

JIS symbol

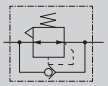

RoHS CAD

Specifications

1 MPa = 10 bar

Item		2419-1C/2C
Working fluid		Compressed air
Max. working pressure	MPa	1.0 (≈150 psi, 10 bar)
Proof pressure	MPa	1.5 (≈220 psi, 15 bar)
Ambient / fluid temperatures	°C	5 (41°F) to 65 (149°F)
Set pressure	MPa	0.04 (≈5.8 psi) to 0.83 (≈120 psi)
Pressure relief		With relief mechanism
Port size	Rc	1/8 / 1/4
Weight	kg	0.2

*1: Refer to the following graph for the set pressure range for back pressure.
*2: Pressure gauge for "LG" is 0 to 0.4 MPa.

Option weight

* Add to the weight of the standard accessories. Unit: kg

	Panel mount	Pressure gauge	Bracket
Code	P	G	B
2419	0	0.086	0.035

Flow characteristics

● 2419-1C/2C Rc1/8 / 1/4

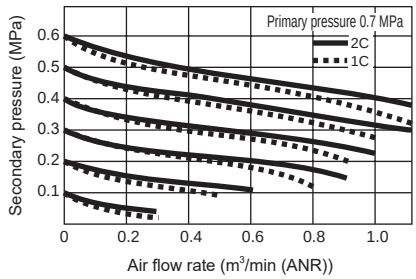

Pressure characteristics

● 2419

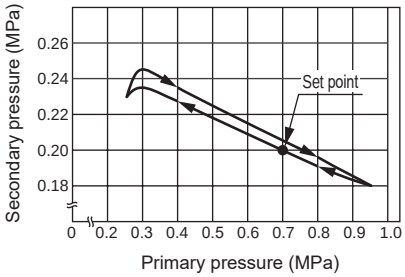

Note on model No. selection

Always refer to the following graph for the set pressure range for back pressure.
For example, if the set pressure is 0.3 MPa and the secondary side back pressure exceeds 0.35 MPa, the secondary side pressure is not released to the primary side.

● Set pressure range to back pressure

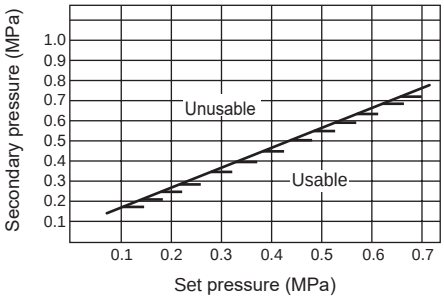

How to order

2419 – 1C – NLGB

Model No.

Ⓐ Port size *1

Ⓑ Option *2 *3 *4

[Example of model No.]

2419-1C-NLGB

Model: Reverse regulator (check valve integrated)
Ⓐ Port size: Rc 1/8
Ⓑ Option: Non-relief, low pressure, pressure gauge included, bracket included

Code		Description
Ⓐ Port size		
1C		Rc1/8
2C		Rc1/4
Ⓑ Option		
Regulator	Blank	Standard
	N	Non-relief
	L	Low pressure (0.02 to 0.34 MPa)
	P	Panel mount
Included product	Blank	Not included
	G	Pressure gauge
	B	Bracket

⚠ Precautions for model No. selection

*1 : If port size NPT thread is required, do not indicate nominal size C. (Example) 2419-1
If a pressure gauge is selected, the NPT thread pressure gauge is enclosed.
*2 : Options can be combined.
*3 : If option codes "B" and "G" are indicated, a pressure gauge and a bracket are enclosed.
The pressure gauge supplied is G49D-6-P10 (G49D-6-P04 for low pressure). Refer to related products (page 363) for pressure gauge specifications.
*4 : If option B (bracket) is selected, a 6506 bracket is enclosed, while if PB (bracket for panel mount) is selected, a 6166 bracket is enclosed. Refer to page 421 for the included product "B" bracket.

Internal structure

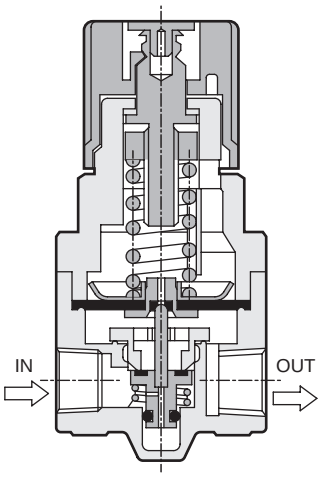

Non-balanced type

Applications

● Circuit diagram

When cylinder head side and rod side pressures differ

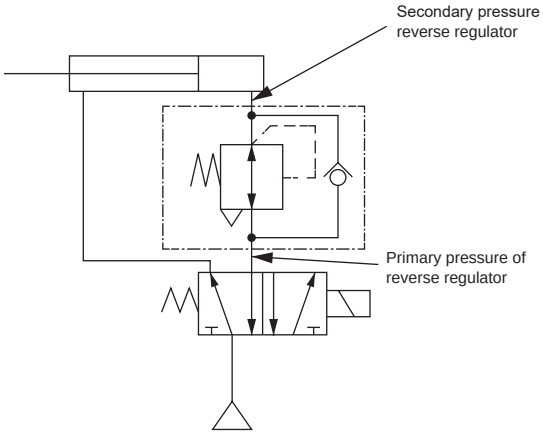

Functions

2419 (non-balanced type)

Since the primary pressure is received under the main valve (valve assembly), if the primary pressure is discharged, the main valve is no longer held by the primary pressure and opens. This enables reverse use.

Dimensions

● 2419

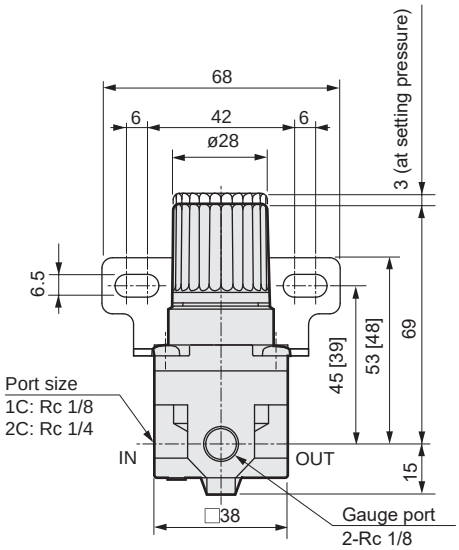

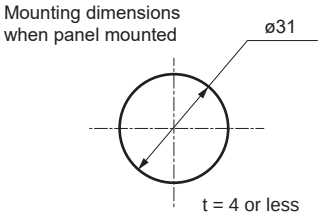

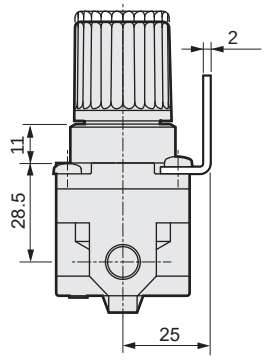

Dimensions shown in [ ] are for PB (bracket for panel mount)

● Wall bracket: 6506
·Material: Steel
Zinc plated

Bracket thickness 2 mm

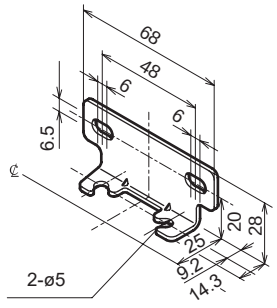

● Wall bracket: 6166
·Material: Steel
Zinc plated

Bracket thickness 2 mm

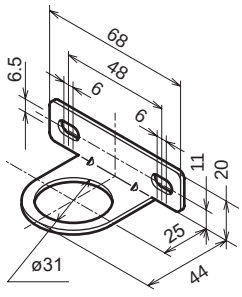

* Tapping screw attached



Relief valve

B6061 Series

If the pressure increases, the compressed air is released to the atmosphere to maintain the set pressure.

● Port size: Rc1/8 to Rc1/4

JIS symbol



RoHS CAD

Specifications

1 MPa = 10 bar

Item		B6061-1C/2C
Working fluid		Compressed air
Max. working pressure	MPa	0.7 (≈100 psi, 7 bar)
Proof pressure	MPa	1.5 (≈220 psi, 15 bar)
Ambient / fluid temperatures	°C	5 (41°F) to 65 (149°F)
Set pressure	MPa	0.04 (≈5.8 psi) to 0.69 (≈100 psi)
Relief flow	ℓ/min ANR	150 (at rising pressure 0.078 MPa (≈11 psi))
Port size	Rc	1/8 / 1/4
Weight	kg	0.29

Flow characteristics

● B6061

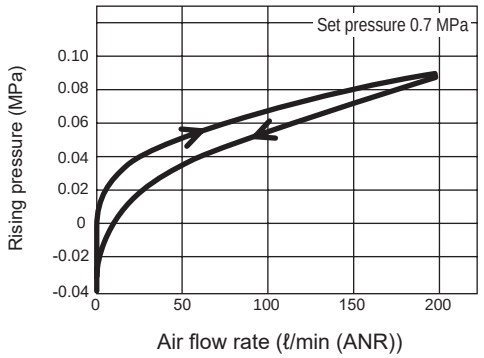

Option weight

* Add to the weight of the standard accessories.

Unit: kg

	Panel mount	Pressure gauge	Bracket
Code	P	G	B
B6061	0	0.086	0.035

How to order

B6061 – 1C – LB

- B6061: Model No.
- 1C: Ⓐ Port size *1
- LB: Ⓑ Option *2 *3

Code		Description
Ⓐ Port size		
1C		Rc1/8
2C		Rc1/4
Ⓑ Option		
Relief valve	Blank	Standard
	L	Low pressure (0.04 to 0.34 MPa)
	P	Panel mount
Incl prod	Blank	Not included
	G	Pressure gauge (G49D-6-P10)
	B	Bracket

[Example of model No.]

B6061-1C-LB

Model: Relief valve, miniature

Ⓐ Port size: Rc 1/8

Ⓑ Option...Low pressure, bracket included

⚠ Precautions for model No. selection

*1 : If port size NPT thread is required, do not indicate nominal size C.
(Example) B6061-1
If a pressure gauge is selected, the NPT thread pressure gauge is enclosed.

*2 : Pressure gauge for "LG" is 0 to 0.4 MPa.

*3 : The pressure gauge supplied for low pressure is G49D-6-P04. Refer to related products (page 363) for pressure gauge specifications.

*4 : If option B (bracket) is selected, a 6506 bracket is enclosed, while if PB (bracket for panel mount) is selected, a 6166 bracket is enclosed. Refer to page 423 for the included product "B" bracket.

Internal structure and parts list

● B6061

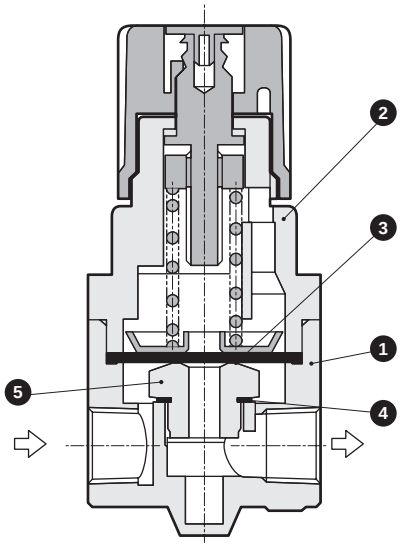

No.	Part name	Material
1	Body	Zinc die-casting
2	Cover	Zinc die-casting
3	Diaphragm assembly	Nitrile rubber/copper alloy/zinc die-casting
4	Gasket	Nitrile rubber
5	Valve seat	Copper alloy

Repair parts list

No.	Part name	Model No.
		B6061
3	Diaphragm assembly	B6061-DIAPHRAGM-KIT

Dimensions CAD

● B6061

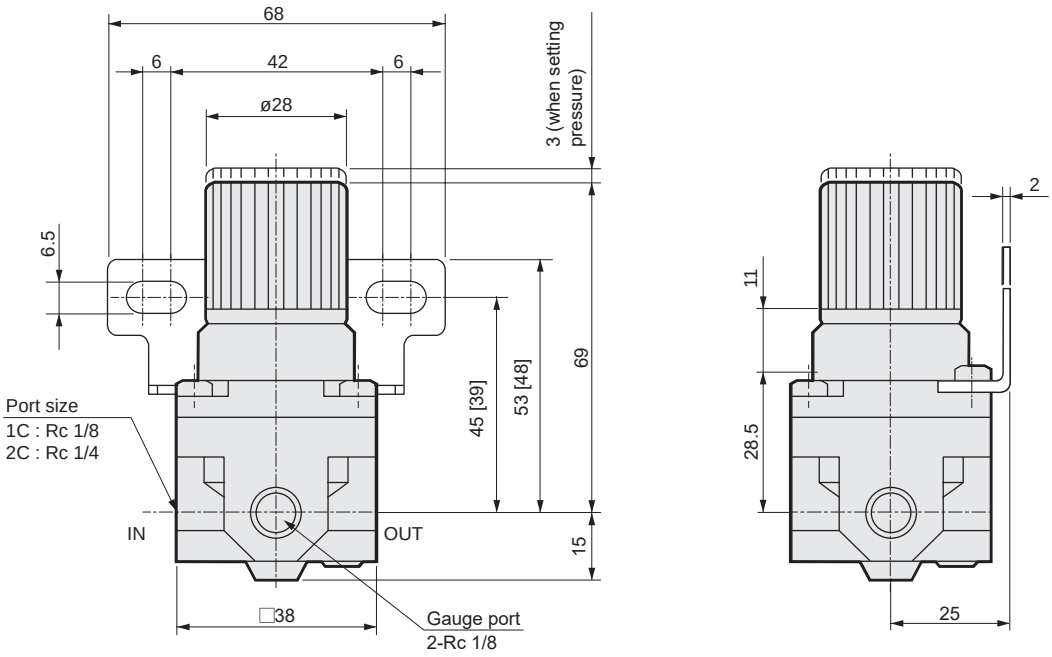

Dimensions shown in [ ] are for PB (bracket for panel mount)

● Wall bracket: 6506
·Material: Steel
Zinc plated
Bracket thickness 2 mm

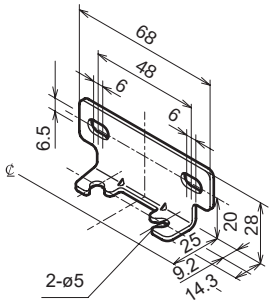

● Wall bracket: 6166
·Material: Steel
Zinc plated
Bracket thickness 2 mm

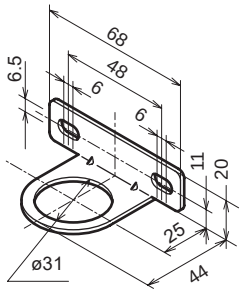

* Tapping screw attached



Lubricator/econo-mist

A3019 Series

Supplying fine oil mist (oil fog).

● Port size: Rc1/8 to Rc1/4

JIS symbol 

RoHS CAD

Specifications

Item		A3019-1C/2C
Working fluid		Compressed air
Max. working pressure	MPa	1.0 (≈150 psi, 10 bar)
Proof pressure	MPa	1.5 (≈220 psi, 15 bar)
Ambient / fluid temperatures	°C	5 (41°F) to 65 (149°F)
Oil used		Turbine oil Class 1, ISO VG32 (spindle oil cannot be used)
Oil storage capacity	cm^3	25
Port size	Rc	1/8 / 1/4
Weight	kg	0.2
Bowl guard		Made to order
Min. drip flow rate	ℓ/min (ANR)	20

*1: The min. drip flow rate is the value at which five drops of oil drip per minute when the primary pressure is 0.5 MPa.

Option weight

* Add to the weight of the standard accessories. Unit: kg

	Drain disch	Bowl material		Bracket
Code	C	Z	M	B
A3019	0	0	0.08	0.035

Oil drip rate

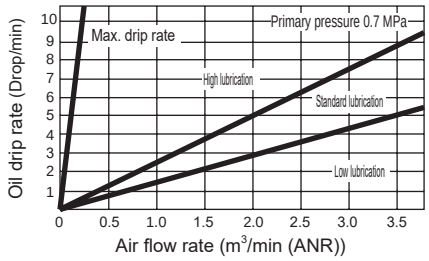

Flow characteristics

● A3019-1C Rc1/8

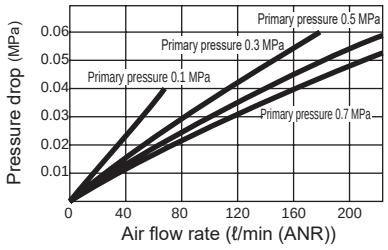

● A3019-2C Rc1/4

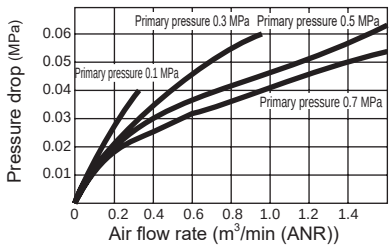

How to order

A3019 – **1C** – **ZB**

- A3019: Model No.
- 1C: A Port size *1
- ZB: B Option *2 *3 *4

[Example of model No.]

A3019-1C-ZB

Model: Lubricator/ Econo-mist, Miniature

A Port size: Rc 1/8

B Option: Nylon bowl, wall bracket included

Code		Description
A Port size		
1C		Rc1/8
2C		Rc1/4
B Option		
Drain discharge	**Blank**	Blank bowl
	C	Manual cock, tire valve (M: Cock)
Bowl material	**Blank**	Polycarbonate
	Z	Nylon bowl
	M	Metal bowl
Incl prod	**Blank**	Not included
	B	Wall bracket (6506)

Precautions for model No. selection

*1 : If port size NPT thread is required, do not indicate nominal size C. (Example) A3019-1

*2 : Refer to page 425 for the included “B” bracket.

*3 : This product cannot be used for a constant flow rate (minimal differential pressure) of an air motor, etc.

*4 : The observation dome material is polyamide resin (nylon) even when a metal bowl is selected.

Internal structure and parts list

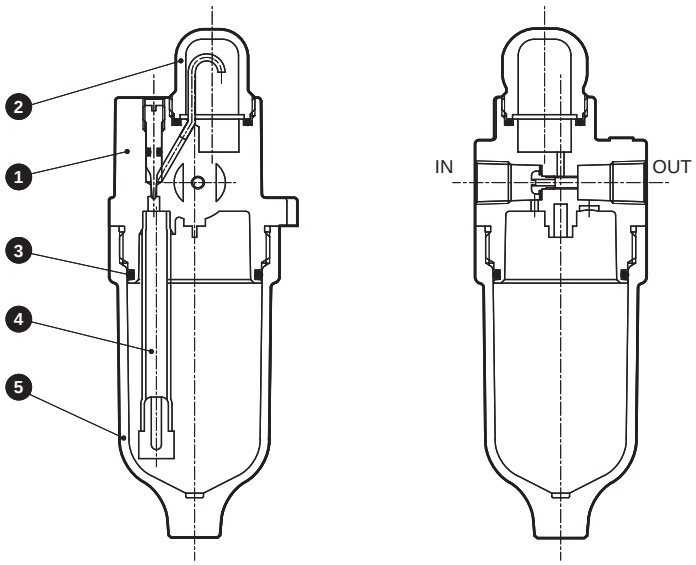

No.	Part name	Material
1	Body	Zinc alloy die-casting
2	Observation dome	Polycarbonate resin
3	O-ring	Special nitrile rubber
4	Siphon tube assembly	Polyamide resin, polypropylene
5	Bowl	Polycarbonate resin

Dimensions CAD

● A3019

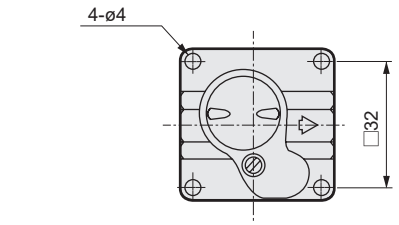

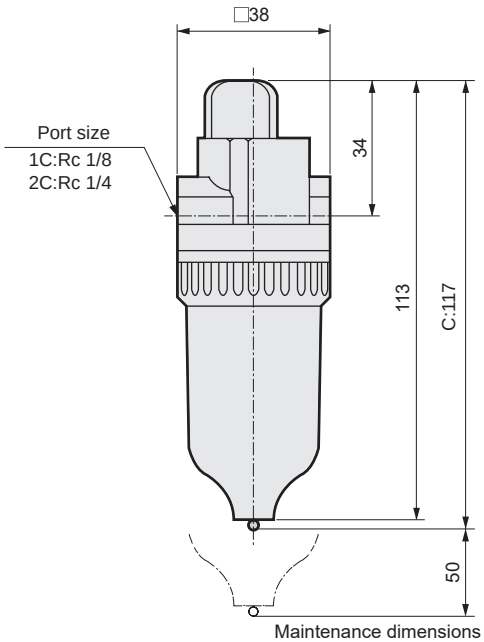

● Wall bracket: 6506
·Material: Steel
Zinc plated
Bracket thickness 2 mm

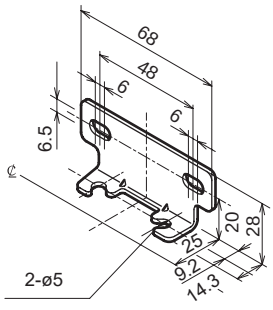

* Tapping screw attached

For air filter

Many options are available for the CKD air filter.
When selecting the model No. of the air filter, carefully consider the environment in which the air filter is to be used.

If an option is required, order with an option code added at the end of the model No.
(Example) If a metal bowl is installed onto the A1019-2C, specify A1019-2C-M.

Bowl options table

Compatible model No.		A1019	1219
Option code	Blank	○	○
	D	○	
	Z	○	○
	DZ	○	
	M	○	○
	DM	○	

How to order bowl assembly

A1019 - BOWL - DM

(A set of bowl assembly and O-ring for sealing)

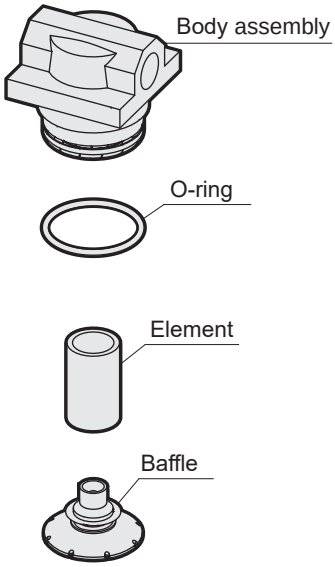

Polycarbonate bowl

Do not use this product where the ambient temperature is high, or where organic solvents such as thinner or trichlene or chemicals are present in the atmosphere. A manual or auto-drain discharger is available for use according to the working conditions.

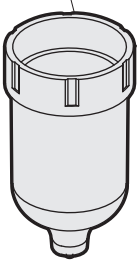

Blank
Z
Manual drain cock

Metal bowl

Use a metal bowl where the ambient temperature is high, or where organic solvents such as thinner or trichlene or chemicals are present in the atmosphere.

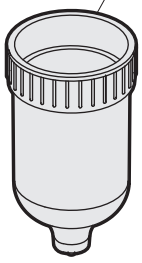

M
Manual drain cock

Nylon bowl

A nylon resin transparent green bowl can be used with some solvents or synthetic oils.
A manual or auto-drain discharger is available for use according to the working conditions.

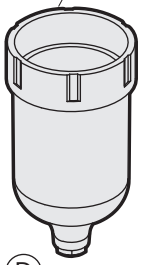

D
DZ
Piston drain type

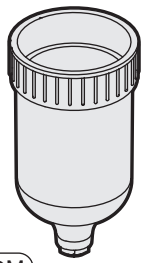

DM
Piston drain type

Regulator

Many options are available for CKD regulator.
When selecting the regulator model No., select the product according to the working conditions of the regulator.

If an option is required, order with an option code added at the end of the model No.
(Example) If a panel mount is installed onto the B2019-2C, specify 2001-2C-P.

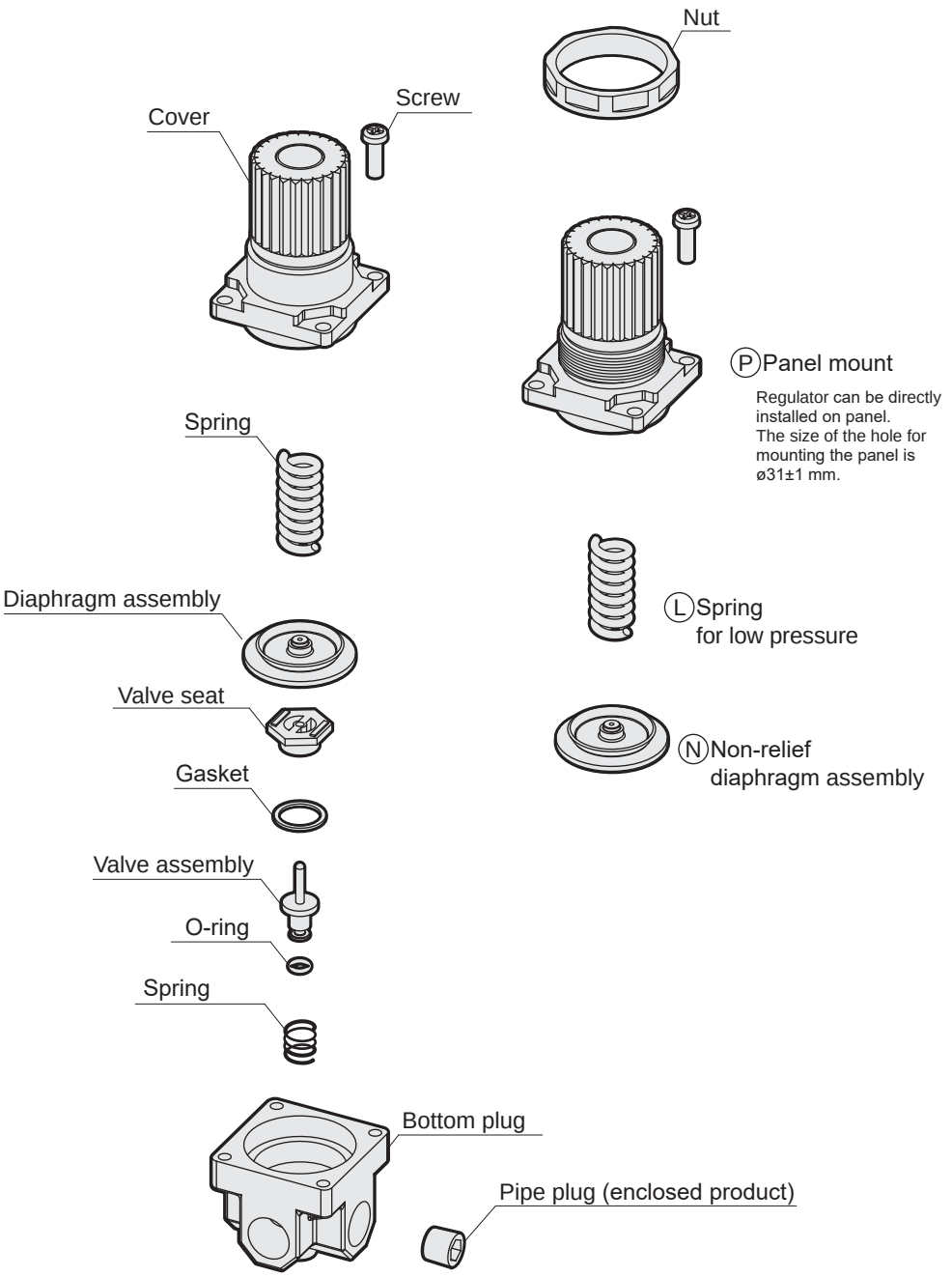

Specifications

Model	Model No.	Pressure adjusting range
Regulator for low pressure	B2019-1/2C-L	0.02 to 0.34 MPa
	2419-1/2C-L	
Relief valve for low pressure	B6061-L	0.04 to 0.35 MPa

Attached pressure gauge

Model		Attached pressure gauge	
		G	LG
B7019	B2019	G49D-6-P10	G49D-6-P04
2419	B6061		

For lubricator

Many options are available for CKD lubricator.
When selecting the model No. of lubricator, carefully consider the type of lubricant and working environment.

If an option is required, order with an option code added at the end of the model No.
(Example) If a metal bowl is installed onto the A3019-2C, specify A3019-2C-M.

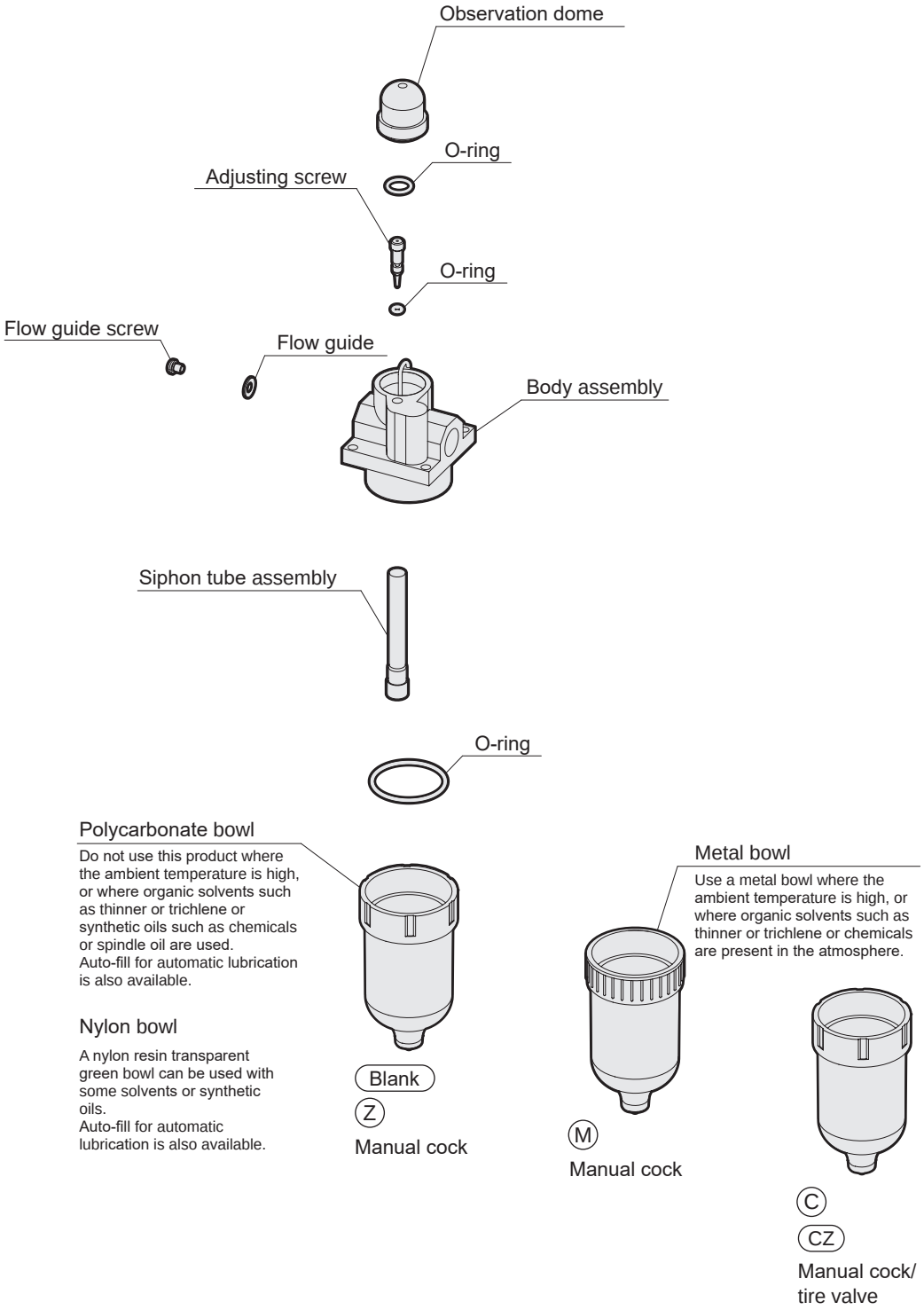

Bowl assembly and model No. table (set of bowl assembly and O-ring for sealing)

Compatible model	Polycarbonate resin bowl		Transparent nylon resin bowl		Metal bowl
	Blank	Manual cock	Blank	Manual cock	Manual cock
A3019	A3019-BOWL	A1019-BOWL	A3019-BOWL-Z	A1019-BOWL-Z	A1019-BOWL-M

MEMO

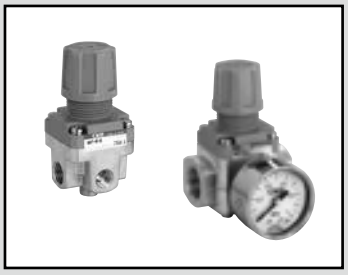

Regulator for water

WR1/WR2 Series

Easy-to-use compact regulator for water

- Port size: Rc1/8 to Rc1/2

JIS symbol

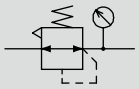

RoHS

Features

- Specially designed knob shape for easy pressure adjustment
- A single push can lock the pressure adjustment knob.
- Mesh filter is supplied as standard.
- RoHS compliant

Main applications

- Control pressure: A constant pressure can be obtained even if the flow rate is unstable.
- Flow rate control: The desired flow rate can be attained when used together with a metering valve.
- Protecting equipment: Equipment can be protected from primary side pressure fluctuations.

Equipment examples: Laser processing machine, welding machine, dental instrument, etc.

Specifications

Item	WR1	WR2
Working fluid	General industrial clear water, compressed air	
Max. working pressure MPa	1.0 (≈150 psi, 10 bar)	
Proof pressure MPa	1.75 (≈250 psi, 17.5 bar)	
Ambient / fluid temperatures °C	5 (41°F) to 60 (140°F)	
Set pressure MPa	Standard: 0.05 (≈7.3 psi, 0.5 bar) to 0.70 (≈100 psi, 7 bar) Low pressure: 0.02 (≈2.9 psi, 0.2 bar) to 0.35 (≈51 psi, 3.5 bar)	
Pressure relief	Non-relief	
Port size (IN/OUT)	Rc1/8,Rc1/4	Rc3/8,Rc1/2
Pressure gauge port size	Rc1/8	
Weight kg	0.22	0.41(Rc3/8),0.44(Rc1/2)
Standard specifications	With mesh filter	

Option weight

* Add to the weight of the standard accessories. Unit: kg

	Panel mount	Pressure gauge	Bracket
Code	P	G	B
WR1/WR2	0.025	0.086	0.03

How to order

WR1 - 8 - N L - G

Ⓐ Model No.
Ⓑ Port size
Ⓒ Option
Ⓓ Attachment

Code	Description	Ⓐ Model No. WR1	Ⓐ Model No. WR2
Ⓑ Port size			
6	Rc1/8	●	
8	Rc1/4	●	
10	Rc3/8		●
15	Rc1/2		●
Ⓒ Option			
Panel mount *1 — **Blank**	Without nut	●	●
Panel mount *1 — **P**	With nut	●	●
Pressure range — **Blank**	0.05 to 0.7 MPa	●	●
Pressure range — **L**	0.02 to 0.35 MPa	●	●
Ⓓ Attachment			
Blank	Not included	●	●
B *1	Bracket	●	●
G *2	Pressure gauge (G49D-6-P10)	●	●

*1: "B " bracket attached is available only for option code P (panel mount). A panel mounting nut cannot be retrofitted in a product without panel mounting nut.

*2: If the pressure range "L" is selected, the pressure gauge G49D-6-P04 for 0.4 MPa will be supplied.

*3: One plug (R1/8) is included with the product.

Flow characteristics (water) Primary pressure 0.7 MPa

●WR1-6-N,WR1-8-N

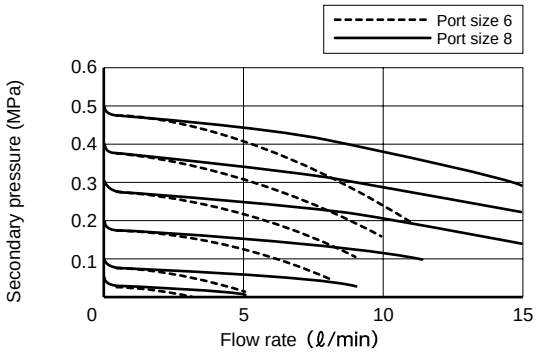

●WR2-10-N,WR2-15-N

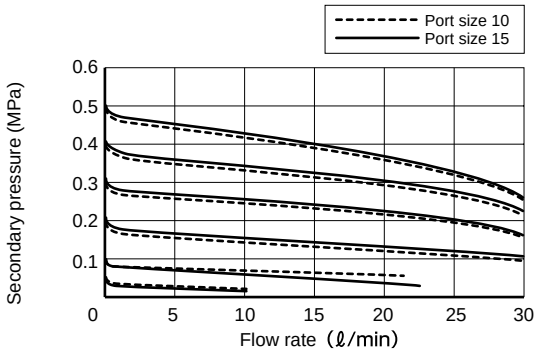

Flow characteristics (air) Primary pressure 0.7 MPa

●WR1-6-N,WR1-8-N

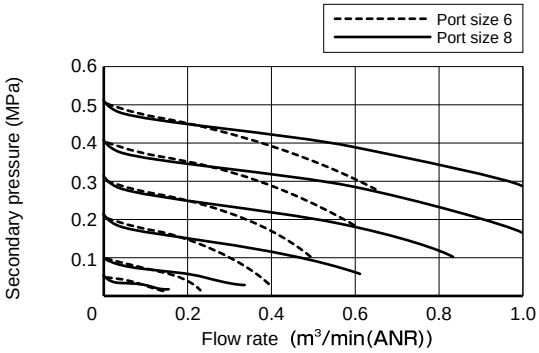

●WR2-10-N,WR2-15-N

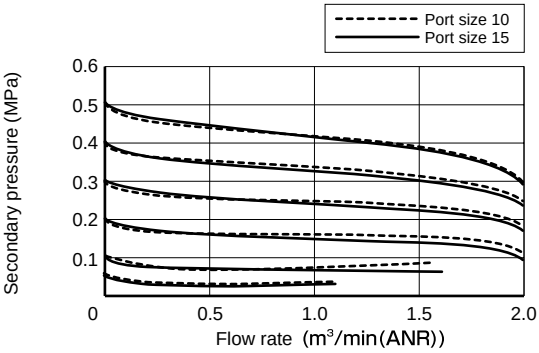

Pressure characteristics (water/air) set point ↗

●WR1

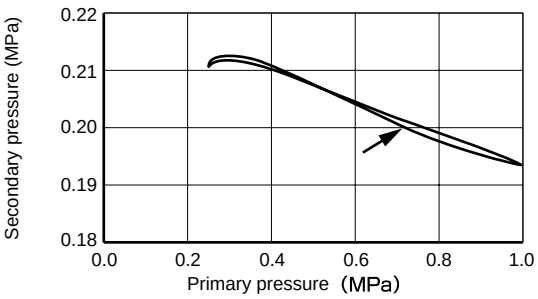

●WR2

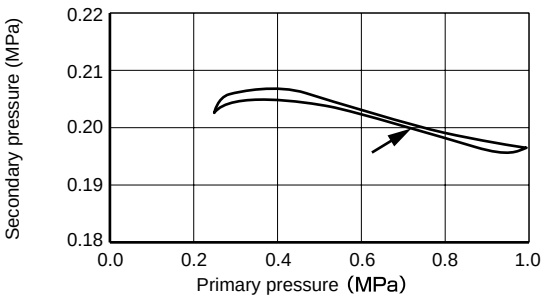

Internal structure and parts list

●WR1

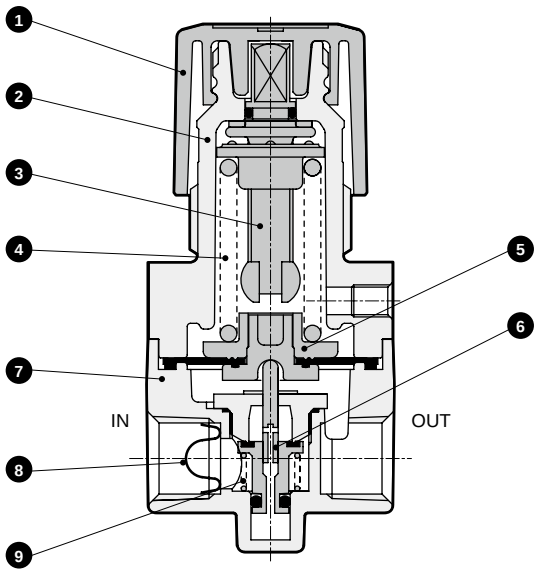

●WR2

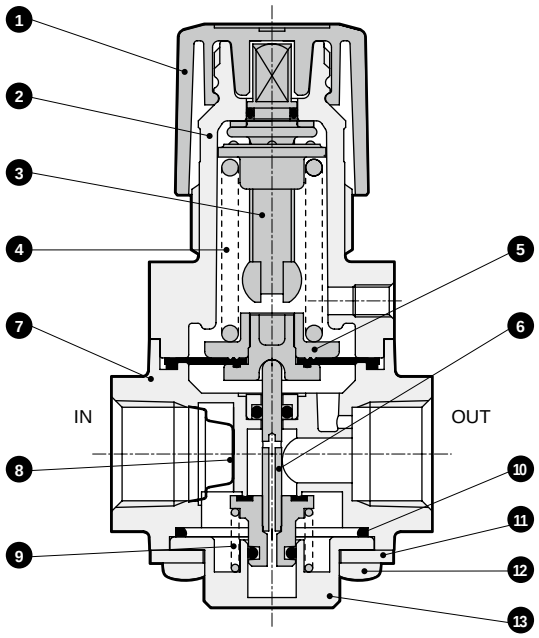

No.	Part name	Material
1	Knob	Polyacetal resin
2	Cover	PBT resin
3	Pressure adjusting screw assembly	Steel, polyacetal resin, nitrile rubber
4	Spring	Steel
5	Diaphragm assembly	Nitrile rubber, polyacetal resin
6	Valve assembly	Copper alloy, stainless steel, nitrile rubber
7	Body assembly	Copper alloy, nitrile rubber, polyacetal resin *

No.	Part name	Material
8	Mesh filter	Stainless steel
9	Bottom spring	Stainless steel
10	O-ring	Nitrile rubber
11	Plate	Stainless steel
12	Thread	Steel (nickel plating)
13	Bottom cap	Copper alloy

* WR1 only

Dimensions

●WR1

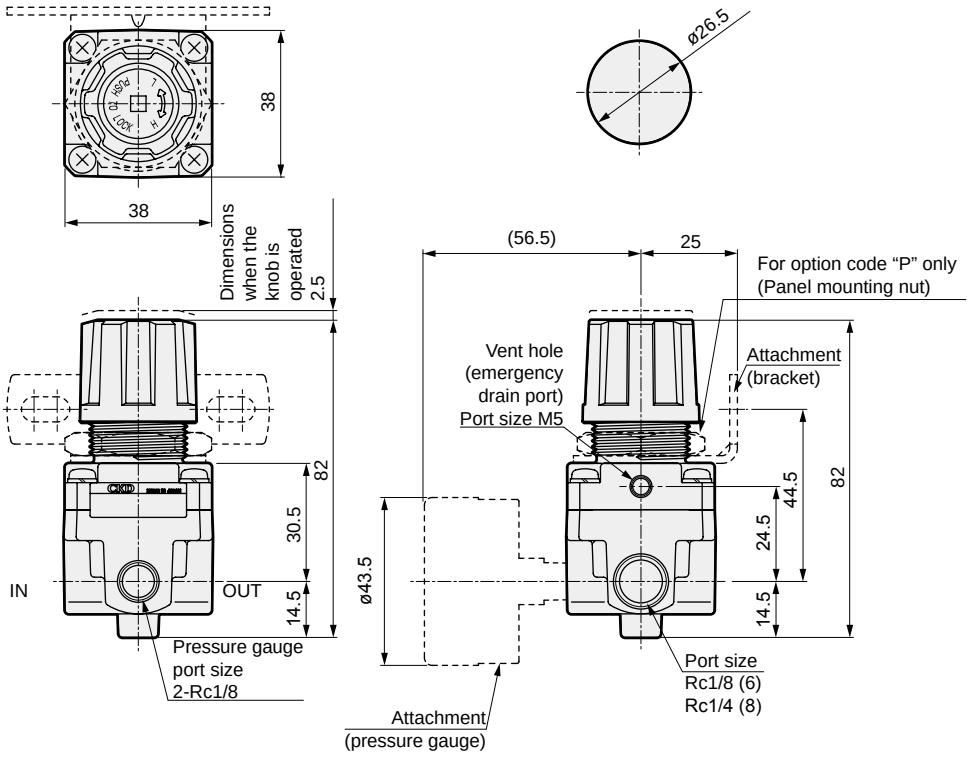

●WR2

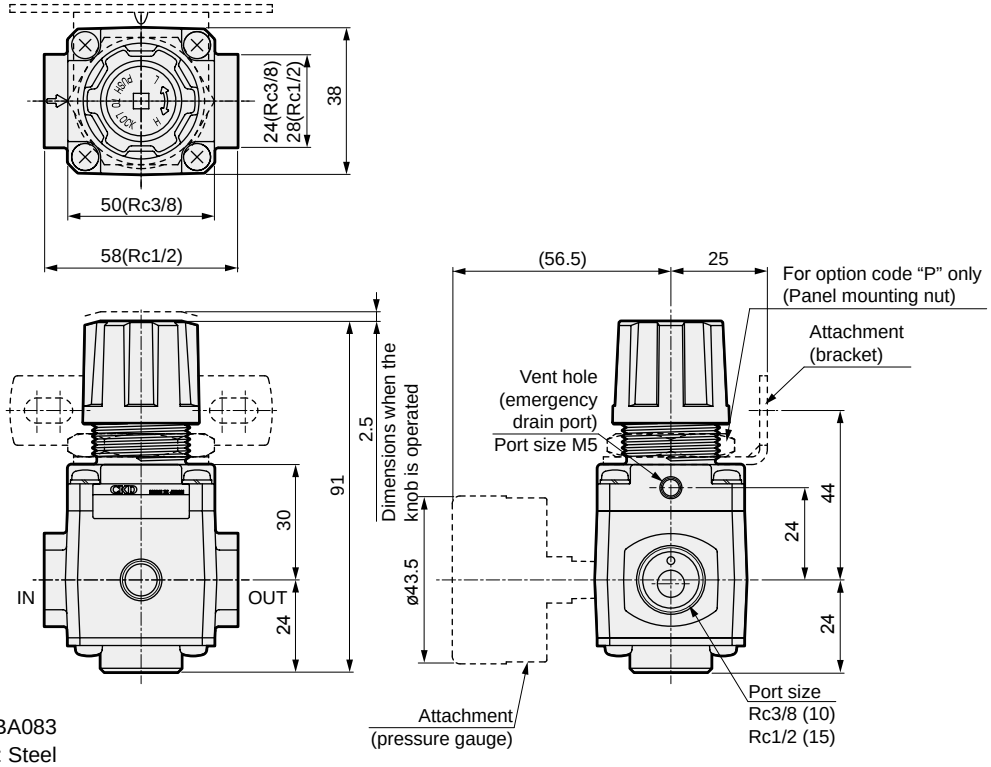

● Bracket: RA800-BA083
· Material: Steel
Zinc plated

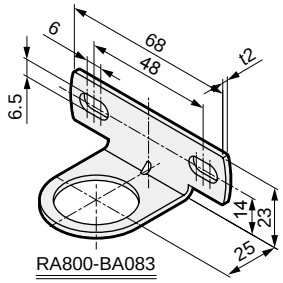

Safety Precautions

Be sure to read this section before use.
Refer to Intro Page 63 for general precautions regarding pneumatic components and refer to " ⚠ Safety precautions" for detailed precautions for individual series.

Product-specific cautions: Compact regulator RB500 Series

Design/selection

⚠ CAUTION

■ Avoid using this product where strong pulsations of pressure or vibration are applied.

■ When installing between a solenoid valve and actuator, avoid use of this product in a circuit where back pressure is applied.

■ Differential pressure between primary and secondary sides is to be 0.1 MPa or more.

■ Usage may not always be possible in a sealed circuit at the secondary side or in a balance circuit and so consult with CKD.

■ Output pressure exceeding the regulator's set pressure could result in damage or faulty operation of the secondary side devices. Be sure to install a safety device.

■ Avoid use in applications released into the atmosphere.

Mounting, installation and adjustment

⚠ CAUTION

■ When transporting or installing the product, do not drop it. Failure of indicator accuracy may occur.

■ Do not install the product in a location with high temperatures or high humidity. Otherwise, malfunctions may result.

■ When installing a pressure gauge, be sure to use a wrench on the width across flats. If another section is used, air leakage or damage could result.

■ When installing or piping, observe the following points.

- Confirm the direction of the IN arrow indicating the air inlet before connecting. A reverse connection could result in improper operation.
- Do not move or swing the product by the pressure adjustment knob.
- When installing a compact regulator, use M4 plain washer attached screws, and fix with tightening torque of 1.4 to 2.0 N·m or less.

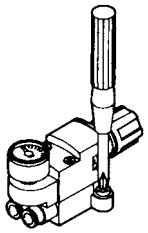

- When installing a block manifold with DIN rail, fix the DIN rail while fixing the bracket between the manifold end blocks.
  Recommended tightening torque of DIN rail bracket is 1.4 to 2.0 N·m. Fix DIN rail bracket, while making no gaps between end blocks. Care must be taken when expanding, maintaining or disassembling regulator blocks.

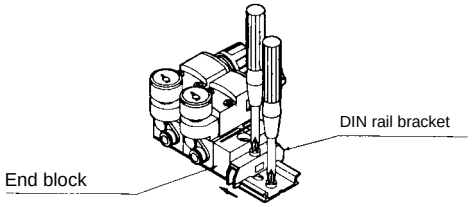

- Do not install this product in a location where it may be subject to vibrations or shocks.
- Before mounting the air pipe to be used, flush it out well.
- Tighten with 3.5 N-m or less tightening torque when mounting a pressure gauge or a fitting for external porting to the pressure gauge mounting board.

- When installing the product directly without using DIN rail (direct mount), fix end blocks on both sides with M4 set screws.
  Recommended tightening torque is 1.4 to 2.0 N·m.
  Install the product on a fully flat surface. If the seating surface is small, external pressure from above may damage the manifold connection section. If a flat seating plane is not available, use DIN rail mount.

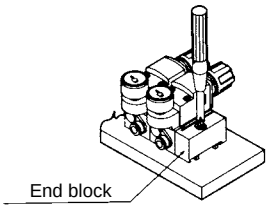

- When using in parallel as below, the OUT side of the circuit must not be closed. If a closed circuit is required, be sure to install a check valve on each OUT side.

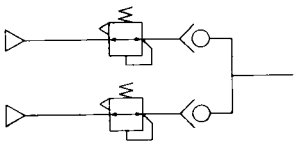

- When installing on a panel, loosen the mounting nut; it will function as a jack and make the knob easily removable. Fix the product on a panel with a mount nut.

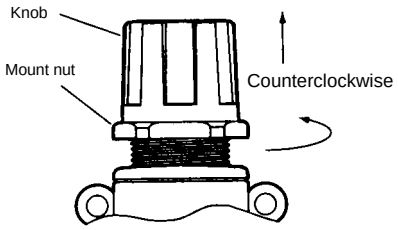

- A push-in fitting is used for the regulator piping. The tube may come off or air leakage may occur depending on diametric accuracy, wall thickness, or hardness of piping tube. Use a CKD specified tube. When mounting or dismounting a fitting, press the release ring evenly, then pull out the tube without twisting it. To reuse the tube, cut the section scored by the chuck finger.

Tube	O.D. (mm)	Outer ø-tolerance (mm)	Bore size (mm)	Min. bending range (mm)
Soft nylon F-1500 Series	ø4	±0.1	ø2.5	10
	ø6		ø4	20
	ø8		ø5.7	30
Urethane U-9500 Series	ø4	+0.1 -0.15	ø2	10
	ø6		ø4	20
	ø8	+0.1 -0.2	ø5	30
Urethane NU Series	ø4	±0.1	ø2.5	8
	ø6		ø4.5	15
	ø8		ø6	24

- Securely insert piping tube into push-in fitting and check that tube does not dislocate before use.
- Cut the push-in fitting tube at right angles with a dedicated tool.

Use/maintenance

⚠ CAUTION

■ Working air quality

- Use clean compressed air filtered with a 5 µm air filter.
- Use only compressed air. Air containing corrosive gases, fluids or chemicals could result in improper pressure adjustment due to body damage or rubber swelling.
- Service life could be shortened due to splashed lubricant and rubber part deterioration when using ultra dry air.

■ Working environment

Avoid using the products in the following environments.

- When ambient temperature exceeds the range of 5 to 60˚C.
- Places where the unit will be exposed to dripping water and/or coolant.
- Highly humid places where dew condenses due to temperature fluctuations.
- Where salt air or splashing seawater contacts the product.
- In atmospheres containing corrosive gases, liquids and chemicals.
- Where the product is exposed to direct sunlight.

■ Pressure management

- Turn the pressure adjustment knob clockwise to increase the secondary pressure and counterclockwise to lower the pressure. When adjusting the pressure, pull up the knob to check that the lock is not applied.
- Pressure higher than the primary pressure cannot be set.
- Set the regulator pressure setting to increase. After setting the pressure, lock the pressure adjustment knob.

Product-specific cautions: Inline filter FSL series

Design/selection

⚠ WARNING

■ The filter's clear cover is made of special polyester resin. Avoid using in an atmosphere containing chemicals (see below) or in a place where these chemicals could come in contact as there is a risk of damage.

Chemical name

Chemical name
All alcohols
Paint thinner
Carbon tetrachloride
Chloroform
Acetic ester
Aniline
Cyclohexane
Trichloroethylene
Sulfuric acid
Lactic acid
Water-soluble coolant (alkaline)

* There are other chemicals which cannot be used. Contact CKD regarding details.

⚠ CAUTION

■ Avoid installing this product where it is subject to direct ultraviolet.

■ Note that when using in a circuit where vacuum and vacuum burst air are alternately applied, the dust removed by the element could be discharged by the burst air.

Mounting, installation and adjustment

⚠ WARNING

■ Do not apply tensile, torsion, or bending loads to the body. Do not drop or apply excessive impact. The body could break or come apart.

⚠ CAUTION

■ Check the arrow indicating the air flow on the body before connecting the pipes. The filter functions will not be satisfied if the pipes are connected in reverse.

■ After removing the dust and replacing the element, securely fix the case and confirm that there are no leaks.

Use/maintenance

⚠ WARNING

■ Always lock the slide lock during use.

⚠ CAUTION

■ Periodically perform maintenance and inspection. A clogged element could decrease performance and cause other problems.

■ When disassembling or assembling for maintenance, make sure that the O-ring is not damaged. Use of a damaged O-ring could result in problems such as leaks.

■ When rotating the fitting body for disassembly or assembly, make sure not to apply excessive force with the tools, etc. The body could break.

Safety Precautions

Be sure to read this section before use.
Refer to Intro Page 63 for precautions for general pneumatic components.

Individual precautions: F.R.L. unit (Compact)

Design/selection

1. Common

⚠WARNING

■ The air filter, lubricator plastic bowl, lubricator drip window and pressure gauge lens are all made of polycarbonates. They cannot be used in environments containing synthetic oil, organic solvents, chemicals, coolant, screw locking agent, leak detection solutions, or hot water, etc., or where these substances may come in contact with the product.
Refer to page 440 for details on plastic bowl chemical resistance.

■ Piping load torque
Avoid applying piping load or torque to the body or pipes.

	Rc1/8,Rc1/4
Max. torque N·m	15

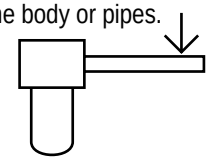

⚠CAUTION

■ High moisture levels
Install the air dryer and drain separator before the air filter.
If there is a lot of moisture from the compressor, hot and highly humid air could shorten the device's life or result in corrosion.

■ Ultra dry air
Rubber parts for the regulator could deteriorate quickly, so use of a fluoro rubber valve assembly is recommended.
Contact CKD when required.

■ Water-lubricated compressor circuit
Take measures to prevent chlorine-based substances from entering the compressed air.

■ Piston drain "D"
- Set the working pressure to 0.1 MPa or more.
- Do not use this device on equipment that experiences impacts.
- Automatic discharge used for intermittent flow. Drainage is not discharged under working conditions where air flows constantly.

2. Filter

⚠WARNING

■ The miniature (A1019, B7019, A3019) bowl does not have a bowl guard. Provide a guard on the device, etc., for safety.

⚠CAUTION

■ Do not select using the port size.

■ Use a pre-filter before the micro alescer filter/ micro-naught. Use a filter (5 μm) or submicron filter as the pre-filter.

3. Regulator, F.R. unit

⚠WARNING

■ Output pressure exceeding the regulator's set pressure could result in damage or faulty operation of the secondary side devices. Be sure to install a safety device.

■ The regulator cannot process residual pressure (release secondary pressure) when the primary pressure is released.
Use a regulator with a check valve when residual pressure must be processed.

■ When using the regulator for secondary side sealed circuits or balance circuits
Contact CKD regarding these applications.

⚠CAUTION

■ The setting range for the regulator's secondary-side pressure should be within 85% of that of the primary side.

■ After setting pressure, do not release primary pressure or depressurize.

■ When using regulators in parallel as below, do not use the OUT side as a closed circuit. If a closed circuit is required, install a check valve on the OUT side of each regulator.

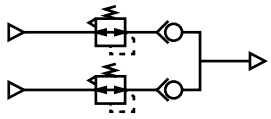

■ For miniature types (B2019, 2419, B6061, B7019), turning the knob in the L direction from the set pressure 0 activates the stopper and the knob does not turn.
Note that if torque is forcibly applied in the L direction, the knob may lock and become inoperable.

⚠CAUTION

■ Pulsation may occur depending on the working conditions or piping conditions.
Lower the primary pressure if pulsation occurs.
Select the proper size as pulsation can occur easily if the flow rate is extremely small in respect to the max. flow rate.

4. Lubricator

⚠WARNING

■ Do not use as lubrication for air motor or bearings. Lubrication may not be possible when used very frequently, such as in a press machine.

⚠CAUTION

■ If the working air quantity is low for the lubricator, oil may not drip.
Check the min. air quantity required for dripping oil.

■ Check that the bowl is not pressurized before supplying oil. Check that the oil level in the bowl is between the upper and lower limits.

5. Relief valve

⚠CAUTION

■ When using released to the atmosphere, restrict the pressure before releasing.

Mounting, installation and adjustment

1. Common

⚠CAUTION

■ Using the F.R.L. correctly

- Avoid installing this product where it is subject to direct ultraviolet.
- Set the regulator pressure setting upward. After setting the pressure, lock the handle. Check primary pressure carefully before setting pressure.
- Check the arrow indicating the air inlet before connecting. A reverse connection could result in improper operation.
- Install the air filter and lubricator vertically with the bowl facing downward. Drainage may be defective or drip check may become impossible.
- Use of the piston drain where vibration is present could cause faults and malfunctions.

■ Piping screw-in torque
Make sure that excessive torque is not applied on the body and piping when piping.

	Rc1/8,Rc1/4
Max. torque N·m	30

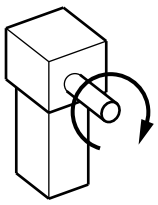

2. F.R. unit

⚠CAUTION

■ Turn the pressure adjustment handle clockwise to increase the secondary pressure and counterclockwise to lower the pressure.

■ Set the pressure while checking primary pressure.

■ If the pressure cannot be adjusted, check the valve assembly for the adherence of foreign matter, and check the O-ring for damage, etc.

3. Filter

⚠CAUTION

■ When piping, remove coolant and rust preventing agent, etc. Failure to observe will obstruct initial performance of the micro naught micro alescer filter, and shorten its life. Coolant and rust preventing agent on the inside of pipes enters compressed air and adversely affects expensive pneumatic components or devices.

4. Regulator, F.R. unit

⚠CAUTION

■ Note that for B7019, B2019, 2419 and B6061, if the knob is forcibly rotated in the L direction, it may lock.

Use/maintenance

1. Common

⚠WARNING

■ Check the air filter, lubricator plastic bowl and lubricator drip window for cracks, damage and other deterioration.
Replace the bowl with a new plastic or metal one and new window if you find any damage.

■ Check the air filter, lubricator plastic bowl and lubricator drip window periodically for contamination.
- If parts are heavily contaminated or if transparency has decreased, replace with a new bowl or drip window.
- Use water and household detergent to wash parts. Rinse them out well with clean water afterward.

■ Removing bowl of filter and lubricator
Stop the compressed air supply. Release the pressure in the bowls completely and make sure that there is no residual pressure before removing the bowls.

■ Assembling parts for maintenance
- For maintenance, wash parts and assemble without entry of cutting chips or other foreign matter.

⚠CAUTION

■ Check the oil drip rate once a day.
If the oil drip is faulty, problems could occur in the unit being lubricated.

■ Storage
Do not store this product in a hot, humid atmosphere or atmospheric conditions outside of the specified range for a prolonged period of time. Resin or rubber parts could deteriorate, and the resin bowl could become discolored. Contact CKD when storing products exceeding specifications.

2. Filter

⚠WARNING

■ Drain so that air filter moisture does not accumulate beyond the upper limit.
Components could malfunction if moisture flows into the secondary side.

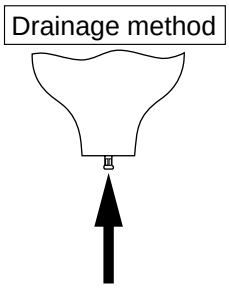

- Drainage starts when the top of the bowl is pressed.

■ Ensure that large amounts of drainage do not flow directly from the piping. Install a drain discharger if there is a large amount of direct drainage.

⚠CAUTION

■ Filter/micro alescer
- Use the differential pressure gauge GA400-8-P02 to measure pressure drop. Measure the pressure drop accurately.

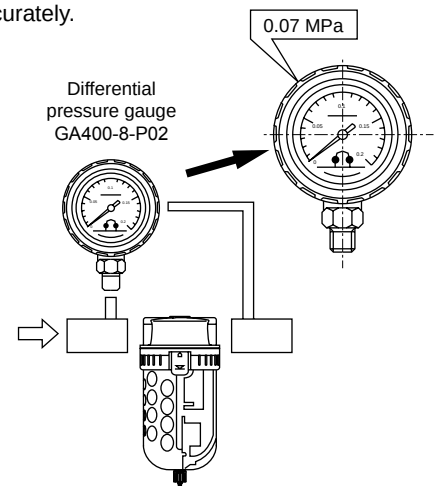

■ The micro alescer (oil removal filter) mantle (element) service life is reached when the pressure drops to 0.07 MPa. Replace the mantle with a new one at the end of its life. (Do not touch the urethane foam layer when replacing the mantle.)

3. Regulator

⚠CAUTION

■ Pull the pressure adjustment knob and release the lock before setting the regulator pressure shown below. The regulator could be damaged if the pressure is set without unlocking it. that the knob locks again if it is turned with force in the L direction from the set pressure 0.



B2019
B6061
2419

■ The set pressure changes from the initial set point due to the working environment and conditions, as well as aging of part materials. Check the pressure regularly, and reset if conditions have changed.

Chemical resistance of plastic

4. Lubricator

⚠WARNING

- Use Class 1 turbine oil (no additives) ISO VG32 for the lubricator.
  Other oils could cause breakage or improper operation.
- Periodically replenish oil in the lubricator bowl so that it does not drop below the lower limit.

⚠WARNING

- The chemical resistance of plastic parts is shown below.
- Avoid using products in an atmosphere where chemicals are contained in compressed air or atmosphere, or where they could adhere to parts.
- Using in the above state could lead to bowl damage and accidents.
- Avoid use with these types of chemicals or in an atmosphere containing these chemicals.
- A metal bowl is available if these chemicals must be used.

Chemical resistance of plastic bowl/body

Use a metal bowl in an atmosphere containing the following chemicals.
Check whether the testing solutions, sealants and adhesives contain the following chemicals.

Types of chemicals	Categories of chemicals	Main products of chemicals	General applications	Polycarbonate bowl	Nylon bowl	Nylon body
Inorganic chemicals	Acids	Hydrochloric acid, sulfuric acid, hydrofluoric acid, phosphoric acid, chromic acid, etc.	Acid washing of metals, acidic degreasing solution, coating treatment solution, etc.	×	×	×
	Alkalines	Alkalis such as caustic soda, caustic potash, calcium hydroxide, aqueous ammonia, sodium carbonate	Alkaline degreasing solution for metals Soluble coolant, leakage detection agent	×	○	○
	Inorganic salts	Sodium sulfide, sodium nitrate, potassium bichromate, sulfate of soda, etc.		×	○	○
Organic chemicals	Aromatic hydrocarbons	Benzene, toluene, xylene, ethyl benzene, styrene, etc.	Contained in paint thinner (benzene, toluene and xylene)	×	×	×
	Chlorinated aliphatic hydrocarbons	Methyl chloride, ethylene chloride, methylene chloride, acetylene chloride, chloroform, trichlene, perchlene, carbon tetrachloride	Organic solvent-based washing solution for metals (trichlene, perchlene, carbon tetrachloride)	×	○	○
	Chlorinated aromatic hydrocarbons	Chlorobenzene, dichlorobenzene, benzene hexachloride (B/H/C), etc.	Agricultural chemicals	×	○	○
	Petroleum components	Solvent naphtha, gasoline, kerosene		×	○	○
	Alcohols	Methyl alcohol, ethyl alcohol, cyclohexanol, benzyl alcohol	Used as antifreezing agent Leakage detection agent	×	×	×
	Phenol	Carbolic acid, cresol, naphthol, etc.	Disinfectant solution	×	×	×
	Ethers	Methyl ether, methyl ethyl ether, ethyl ether	Additive of brake oil	×	○	○
	Ketones	Acetone, methyl ethyl ketone, cyclohexanone, acetophenone, etc.		×	×	×
	Carboxylic acids	Formic acid, acetic acid, butyl acid, acrylic acid, oxalic acid, phthalic acid, etc.	Dyes/oxalic acid for aluminum processing, phthalic acid for paint base and leakage detection agents	×	×	×
	Esters	Dimethyl phthalate (DMP), diethyl phthalate (DEP), dibutyl phthalate (DBP), dioctyl phthalate (DOP)	Lubricant, synthetic coolant, rust preventing agent additive plasticizer for synthetic resin	×	○	○
	Oxyacids	Glycol acid, lactic acid, malic acid, citric acid, tartaric acid		×	×	×
	Nitro compounds	Nitromethane, nitroethane, nitroethylene, nitrobenzene, etc.		×	○	○
	Amines	Methylamine, dimethylamine, ethylamine, aniline, acetanilide, etc.	Additive of brake oil	×	×	×
	Nitriles	Acetonitrile, acrylonitrile, benzonitrile, acetoisonitrile, etc.	Raw material for nitrile rubber	×	○	○

○: Resistant, x: Non-resistant (plastic will become damaged.)

Product-specific cautions: Regulator for water WR1/WR2 Series

Design/selection

⚠ WARNING

- Use the product in the range of conditions specified for the product.
- This product is designed for industrial use. Do not use for medical purposes, or in any equipment or circuit that concerns human life.
- Output pressure exceeding the regulator's set pressure could result in damage or faulty operation of the secondary side devices. Be sure to install a safety device.
- Piping load torque

  Avoid applying piping load or torque to the body or pipes.

Max. torque	Rc1/8,Rc1/4	Rc3/8,Rc1/2
N·m	15	50

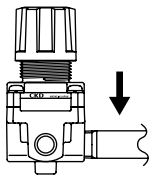

⚠ CAUTION

- Certain fluids (water quality) can shorten expected useful life to a significant degree. Use general clear water for industrial use. Do not use any liquid or fluid that is intended for the removal of foreign matter or water stains, or that can lead to corrosion or rubber swelling.
- Mesh filters are provided to remove initial foreign matter, such as sealant tape. If it is known that foreign matter is in the fluid, install a strainer before the regulator. Check for clogging in the mesh filters and strainers.
- Pulsation may occur depending on the usage conditions and piping conditions. Lower primary pressure if pulsation occurs.
- Releasing the primary-side pressure may make the secondary-side pressure flow into the primary side. If a problem occurs in another device due to the inflow of secondary-side fluid to the primary side, provide a circuit to retain the pressure.
- The setting range for the regulator's secondary-side pressure should be within 85% of that of the primary side. Otherwise, the pressure drop may increase.

Mounting, installation and adjustment

⚠ CAUTION

- Install the product where it is not exposed to direct sunlight.
- When using this product in a cold climate, take the necessary measures to prevent freezing.
- Flush and clean the pipes. Dirt or foreign matter remaining in the piping will deteriorate product performance.
- Make sure that no foreign matter enters the pipes when connecting the pipes and fittings. When screwing in piping or fittings, check that swarf from port threads or sealant does not get inside. Dirt or foreign matter remaining in the piping will deteriorate product performance.
- Match the flow direction and the direction of the arrow on the product for correct connection. This product does not operate when it is connected in the opposite direction.
- Secure sufficient space for maintenance and inspection.
- Do not install this product in a location where it may be subject to vibrations or shocks.
- Use appropriate torque to hold the body and tighten the pipes when connecting them. (The following table shows the recommended torque values.) The product may be damaged if excessive torque is applied.

Max. torque	M5	Rc1/8	Rc1/4	Rc3/8	Rc1/2
N·m	0.2 to 0.3	18 to 20	23 to 25	31 to 33	41 to 43

- Use a pressure gauge and plug to block the pressure gauge connection port.
- It is recommended that pipes are connected to the breathing port when using this equipment. This ensures safe water discharge even if a crack occurs in the diaphragm due to excessive pressure, pressure fluctuation, or freezing.
- When the panel mounting nut is loosened, the nut acts as a jack and enables the knob to be removed easily. Install the nut before installing the knob.

Use/maintenance

⚠CAUTION

- Do not modify this product.
- Before conducting maintenance, stop the supply of the fluid and make sure that there is no residual pressure.
- Do not store this product in a hot, humid atmosphere or atmospheric conditions outside of the specified range for a prolonged period of time. This can lead to deterioration of the resin and rubber parts.
- Release the lock before adjusting the pressure. Forcibly turning a locked pressure adjustment knob could cause damage.
- Adjust pressure in the direction of the pressure increase. The correct pressure cannot be set if pressure is adjusted downward.
- This product is a non-relief; pressure reduction is not possible without consumption on the secondary side.
- The set pressure changes from the initial set point due to the working environment and conditions, as well as aging of part materials. Check the pressure regularly and reset if conditions have changed.

Large bore size filter, regulator

■ **F.R.L units**

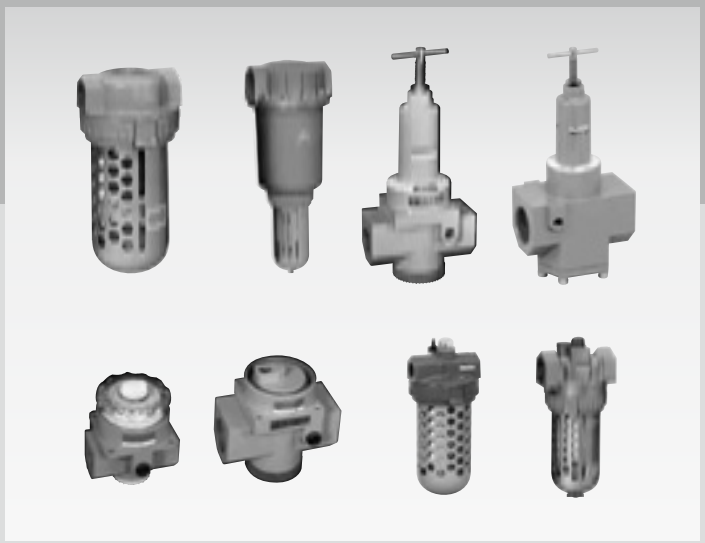

CONTENTS

Series variation 4 to 19

Filter

- Air filter (1138/1126) 444
- Heavy duty air filter (A1338/1326) 448
- Submicron air filter (for tar removal) 450
- Micro alescer/micro naught (oil removal) 452
- Micro alescer/odor naught (odor removal) 454

Regulator

- Regulator (2215/2216) 458
- Reverse regulator (check valve integrated) (2415) 462
- Dial air regulator (2302/2303/2304) 464
- Remote dial air regulator (2302/2303/2304) 467

Lubricator

- Econo-mist (300*E) 470
- Auto-fill (3003E) 474

Optional parts table 476

⚠ Safety precautions 480

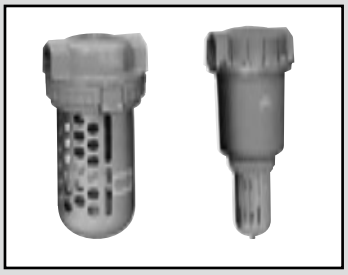

Air filter

1138/1126 Series

Filtration 5 μm

● Port size: Rc $^3/_4$ to Rc2

JIS symbol 

RoHS CAD

Specifications

Item		1138-6C/8C-E	1126-10C/12C/16C-E	NO auto-drain air filter with manual cock	
				1138-6C/8C-F	1126-10C/12C/16C-F
Working fluid		Compressed air			
Max. working pressure	MPa	1.0 (≈150 psi, 10 bar)			
Proof pressure	MPa	1.5 (≈220 psi, 15 bar)			
Ambient / fluid temperatures	°C	5 (41°F) to 65 (149°F)			
Filtration rating	μm	5			
Port size	Rc	$^3/_4$, 1	1 $^1/_4$, 1 $^1/_2$, 2	$^3/_4$, 1	1 $^1/_4$, 1 $^1/_2$, 2
Weight	kg	2.3	7.4	2.3	7.4
Bowl guard		Standard equipment			

*1: Min. working pressure of N.O. auto-drain with manual cock (option F) is 0.1 MPa.

Option weight

* Add to the weight of the standard accessories.

Unit: kg

	Drain discharge		Bowl material		
Code	E	F	Z	M	MG
1138	0	0.02	-0.025	0	0.17
1126	0	0.02	-0.025	0	0.17

Flow characteristics

● 1138-6C Rc$^3/_4$

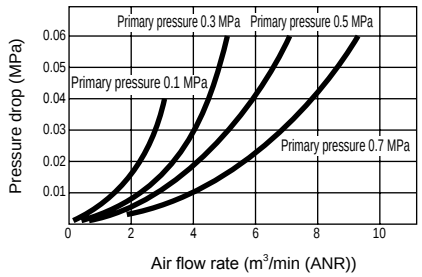

● 1138-8C Rc1

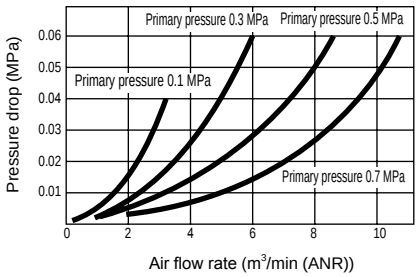

● 1126-10C Rc1 $^1/_4$

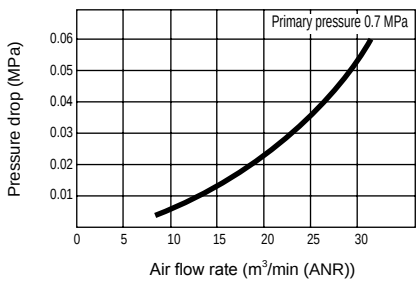

● 1126-12C Rc1 $^1/_2$

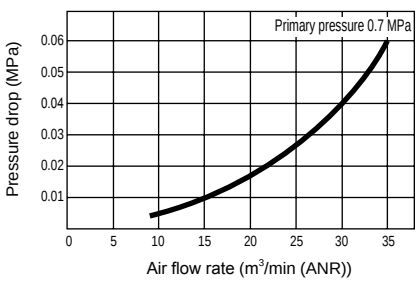

● 1126-16C Rc2

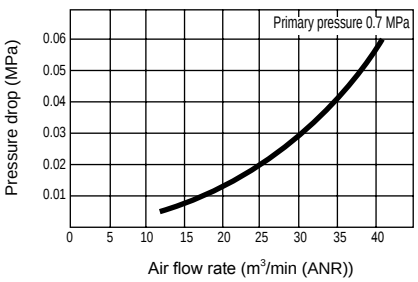

How to order

1138 – **6C** – **EZX**

Ⓐ Model No.

Ⓑ Port size *1

Ⓒ Option *2 *3 *5

Code		Description	Ⓐ Model No. 1138 (Large)	Ⓐ Model No. 1126 (Large bore)
Ⓑ Port size				
6C		Rc 3/4	●	
8C		Rc1	●	
10C		Rc 1 1/4		●
12C		Rc 1 1/2		●
16C		Rc2		●
Ⓒ Option				
Drain discharge	**Blank**	Manual cock	●	●
	E	Flexible drain	●	●
	F	NO auto-drain with manual cock (exhaust when not pressurized)	●	●
Bowl material	**Blank**	Polycarbonate bowl	●	●
	Z	Nylon bowl	●	●
	M	Metal bowl	●	●
	MG	Metal bowl with gauge	●	●
Element	**Blank**	5 µm	●	●
	X	3 µm	●	●
	Y	0.3 µm	●	●

[Example of model No.]

1138-6C-EZX

Model: Air filter

Ⓐ Model No.: Large
Ⓑ Port size: Rc 3/4
Ⓒ Option: Flexible drain, nylon bowl, element 3 µm

Precautions for model No. selection

*1 : If port size NPT thread is required, do not indicate nominal size C. (Example) 1138-6

*2 : For auto-drain, the NO auto-drain with manual cock "F" (discharges drainage automatically when no pressure is applied such as nighttime) is recommended. However, the NC auto-drain with manual cock "F1" can be selected for a low flow rate air circuit.

*3 : Refer to page 450 for max. processing flow rate when option "Y" is selected.

*4 : Copper and PTFE free as standard.

*5 : Refer to page 480 for the auto-drain usage conditions.

Internal structure and parts list

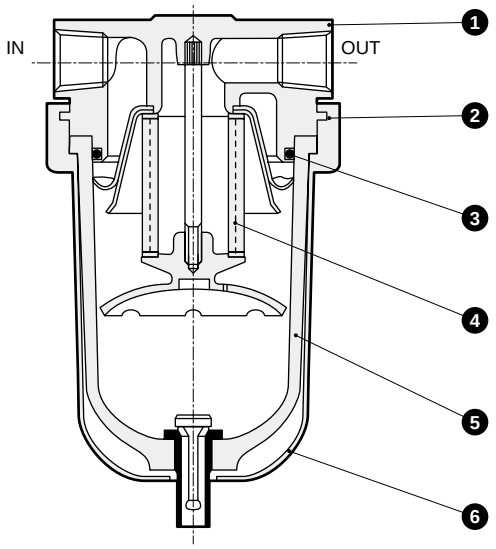

No.	Part name		Material 1138	Material 1126
1	Cover		Zinc alloy die-casting	Aluminum alloy die-casting
2	Clamp ring		Zinc alloy die-casting	
3	O-ring		Special nitrile rubber	
4	Element	5 µm	Polypropylene fiber	
		3 µm	Cotton	
		0.3 µm	Cotton, filter paper	
5	Bowl		Polycarbonate resin	
6	Bowl guard		Steel	

Repair parts list

No.	Part name		Model No. 1138	Model No. 1126
4	Element	5 µm	1138-ELEMENT	1126-ELEMENT
		3 µm	1138-ELEMENT-X	1126-ELEMENT-X
		0.3 µm	1138-ELEMENT-Y	1126-ELEMENT-Y

Dimensions CAD

● 1138-6C/8C-E

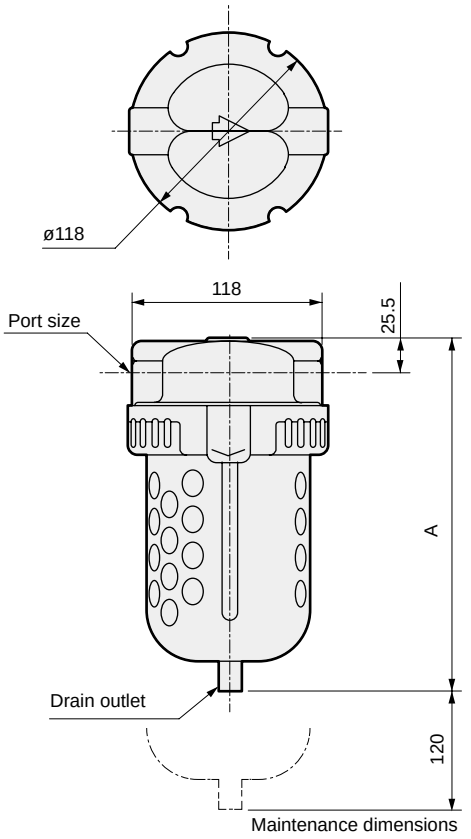

● 1126-10C/12C/16C

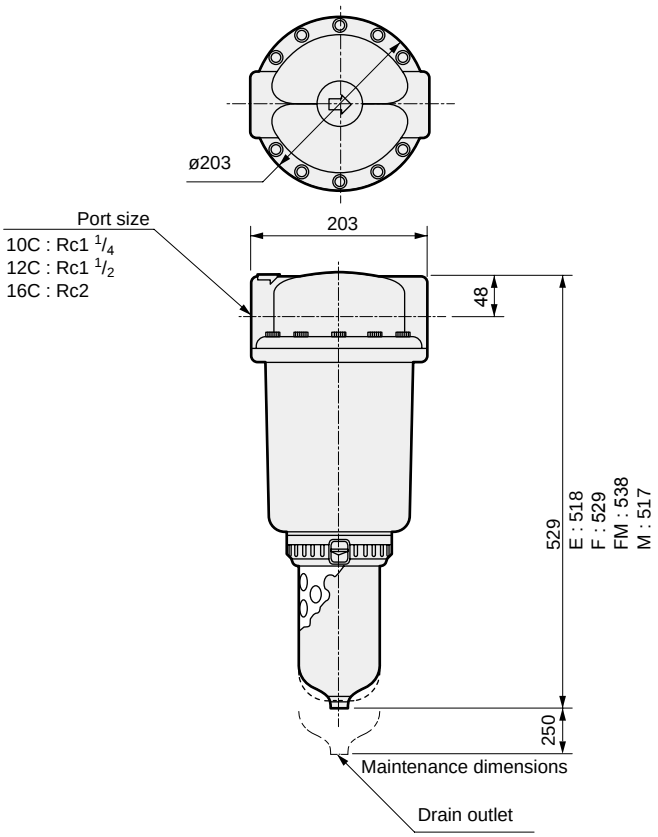

Model No.	A					Port size
Combination option	Blank	E	F	M	FM	
1138-6/8C	266	253.5	266	252.5	273	Rc3/4 /1

*1: A nylon tube with the bore size of ø5.7 to 6.0 can be directly connected to the drain outlet of manual cock.
*2: For metal bowl auto-drain, the drain outlet port size is Rc 1/4.

● Pipe bracket: 6132
· Material: Steel
Zinc plated
Bracket - Pipe bracket thickness 4.5 mm

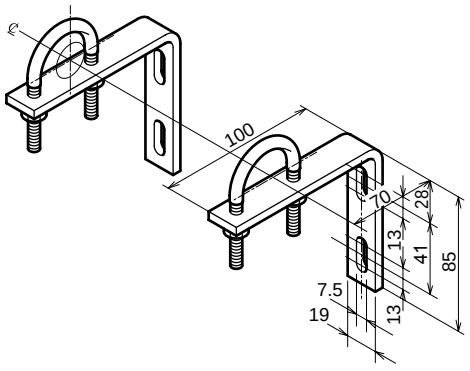

Model No.	Port size
6132-6C	3/4B
6132-8C	1B

MEMO

A1338/1326 Series

Heavy duty air filter

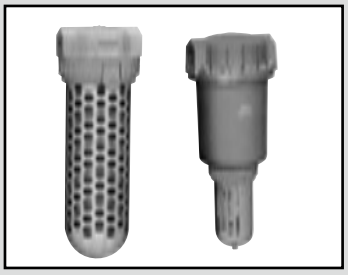

Float type special drain (NC: no exhaust when not pressurized) is powerfully used to remove large amounts of drainage. (Filtration 5 μm)

● Port size: Rc $^3/_4$ to Rc2

JIS symbol 

RoHS CAD

Specifications

Item		A1338-6C/8C	1326-10C/12C/16C
Appearance		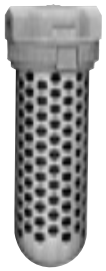	
Max. working pressure	MPa	1.0 (≈150 psi, 10 bar)	
Proof pressure	MPa	1.5 (≈220 psi, 15 bar)	
Ambient / fluid temperatures	°C	5 (41°F) to 65 (149°F)	
Min. working pressure	MPa	0.14 (≈20 psi, 1.4 bar)	0.07 (≈10 psi, 0.7 bar)
Filtration rating	μm	5	
Recommended max. flow rate	m^3/min(ANR)	1.55	5.8
Port size	Rc	$^3/_4$, 1	1 $^1/_4$, 1 $^1/_2$, 2
Weight	kg	2.6	7.5

Note: Recommended max. flow rate is the atmospheric pressure conversion value where the inlet air pressure is 0.7 MPa and the initial pressure drop is 0.002 MPa.

How to order

1326 – **10C** – **ZX**

- **1326** — Ⓐ Model No.
- **10C** — Ⓑ Port size *1
- **ZX** — Ⓒ Option

Code		Description	Ⓐ Model No. A1338	Ⓐ Model No. 1326
Ⓑ Port size				
6C		Rc$^3/_4$	●	
8C		Rc1	●	
10C		Rc1 $^1/_4$		●
12C		Rc1 $^1/_2$		●
16C		Rc2		●
Ⓒ Option				
Bowl material	**Blank**	Polycarbonate bowl	●	●
	Z	Nylon bowl		●
	M	Metal bowl	●	●
	MG	Metal bowl with gauge	●	●
Element	**Blank**	5 μm	●	●
	X	3 μm	●	●
	Y	0.3 μm	●	●

⚠ Precautions for model No. selection

*1: If port size NPT thread is required, do not indicate nominal size C. (Example) A1338-6

[Example of model No.]

1326-10C-ZX

Model: Heavy duty air filter

Ⓑ Port size: Rc1 $^1/_4$

Ⓒ Option: Nylon bowl, element 3 μm

Option weight

* Add to the weight of the standard accessories.

Unit: kg

	Bowl material		
Code	**Z**	**M**	**MG**
A1338		0.7	0.86
1326	-0.025	0	0.17

Internal structure and parts list

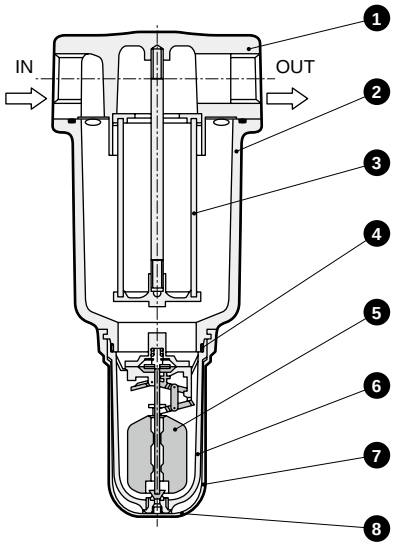

No.	Part name		Material	
			A1338	1326
1	Cover		Zinc alloy die-casting	Aluminum alloy die-casting
2	Body		——	Aluminum alloy die-casting
3	Element	5 µm	Polypropylene	
		3 µm	Cotton	
		0.3 µm	Cotton, filter paper	
4	O-ring		Special nitrile rubber	
5	Drain unit		Polyacetal resin, nitrile rubber, etc.	
6	Bowl		Polycarbonate resin	
7	Bowl guard		Steel	
8	Drain seat assembly		Aluminum alloy, nitrile rubber	

Repair parts list

No.	Part name		Model No.	
			A1338	1326
3	Element	5 µm	1138-ELEMENT	1126-ELEMENT
		3 µm	1138-ELEMENT-X	1126-ELEMENT-X
		0.3 µm	1138-ELEMENT-Y	1126-ELEMENT-Y

Dimensions

● A1338-6C/8C

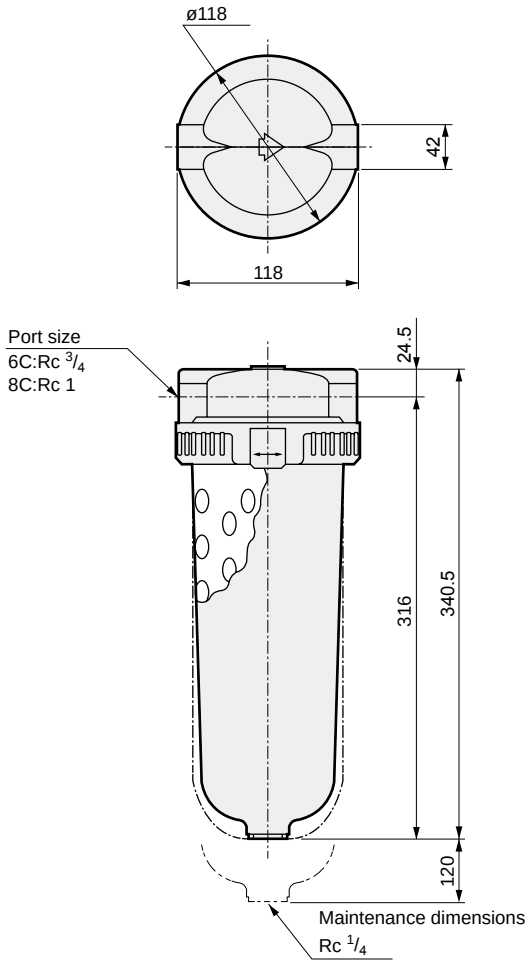

● 1326-10C/12C/16C

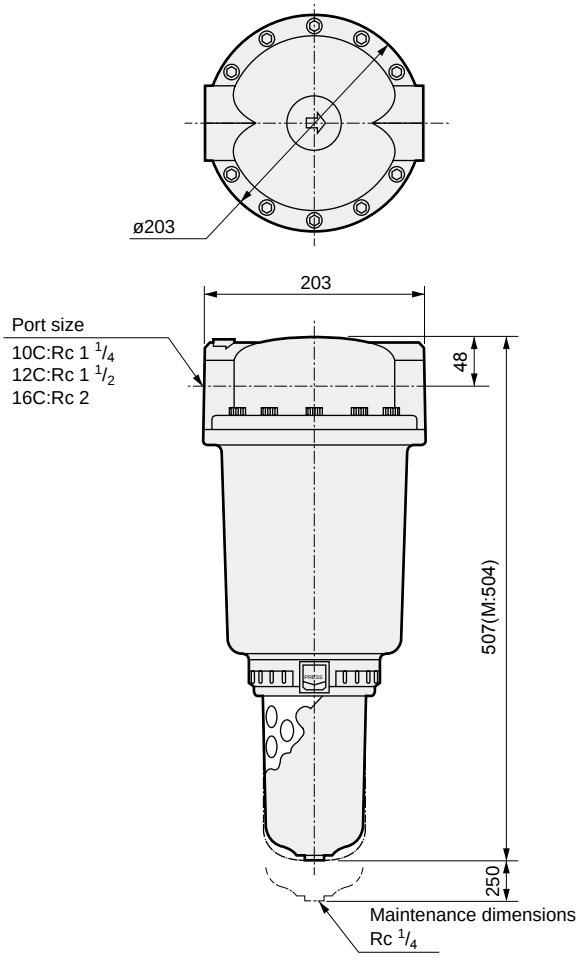

Submicron air filter (for tar removal)

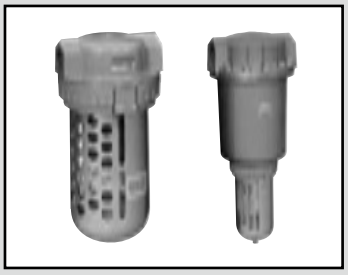

Removing 99% solids substances such as tars and carbons, etc., up to 0.3 micron.

● Port size: Rc $^3/_4$ to Rc2

JIS symbol 

Specifications

Item		1138-6C/8C-EY	A1338-6C/8C-Y	1126-10C/12C/16C-EY	1326-10C/12C/16C-Y
Appearance					
Max. working pressure	MPa	1.0 (≈150 psi, 10 bar)			
Proof pressure	MPa	1.5 (≈220 psi, 15 bar)			
Ambient / fluid temperatures	°C	5 (41°F) to 65 (149°F)			
Filtration rating	μm	0.3			
Solid removal ratio	%	99			
Max. flow rate	m^3/min(ANR)	1.55	1.55	4.9	4.9
Port size	Rc	$^3/_4$, 1	$^3/_4$, 1	1 $^1/_4$, 1 $^1/_2$, $^1/_2$	1 $^1/_4$, 1 $^1/_4$, 2
Weight	kg	2.2	2.6	7.4	7.5

*1: Max. flow rate is the atmospheric pressure conversion value where the inlet air pressure is 0.7 MPa and the initial pressure drop is 0.01 MPa.

Option weight

* Add to the weight of the standard accessories.

Unit: kg

	Drain discharge		Bowl material		
Code	E	F	Z	M	MG
1138-Y	0	0.02	-0.025	0	0.17
A1138-Y				0.7	
1126-Y	0	0.02	-0.025	0	0.17
1326-Y			-0.025	0	0.17

Flow characteristics (max. processing flow rate)

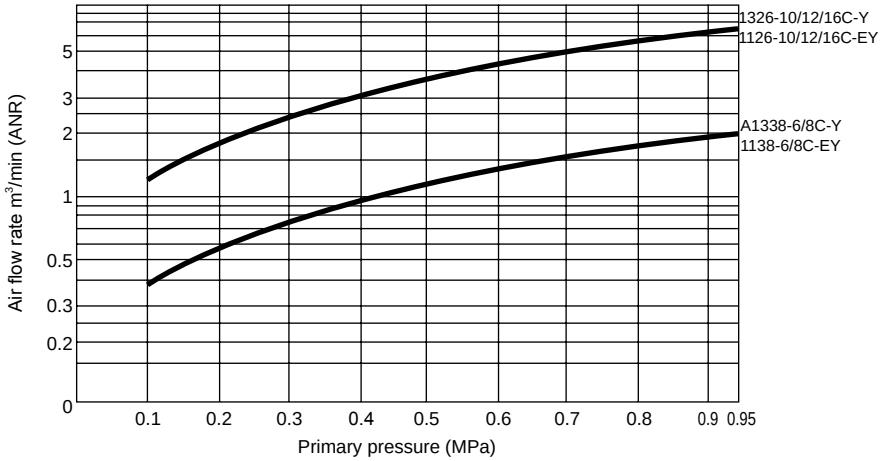

How to order

1138 – 6C – EZY

- Ⓐ Model No.
- Ⓑ Port size *1
- Ⓒ Option *2 *3

Code		Description	Ⓐ Model No. Large 1138-Y	Heavy duty A1338-Y	Large bore 1126-Y	Heavy duty 1326-Y
Ⓑ Port size						
6C		$Rc^3/_4$	●	●		
8C		Rc1	●	●		
10C		$Rc1^1/_4$			●	●
12C		$Rc1^1/_2$			●	●
16C		Rc2			●	●
Ⓒ Option						
Drain discharge	**Blank**	Manual cock	●		●	
	E	Flexible drain	●		●	
	F	NO auto-drain with manual cock (exhaust when not pressurized)	●		●	
	D	Piston drain				
Bowl	**J**	Jumbo bowl				
Bowl material	**Blank**	Polycarbonate bowl	●	●	●	●
	Z	Nylon bowl	●		●	●
	M	Metal bowl	●	●	●	●
	MG	Metal bowl with gauge	●	●	●	●
Element	**Y**	0.3 μm	Standard equipment			

⚠ Precautions for model No. selection

*1 : If port size NPT thread is required, do not indicate nominal size C. (Example) 1138-6

*2 : For auto-drain, the NO auto-drain with manual cock "F" (discharges drainage automatically when no pressure is applied such as nighttime) is recommended. However, the NC auto-drain with manual cock "F1" can be selected for a low flow rate air circuit.

*3 : Refer to page 480 for the auto-drain usage conditions.

[Example of model No.]

1138-6C-EZY

Model: Submicron air filter

- Ⓐ Model No.: Large
- Ⓑ Port size: Rc $^3/_4$
- Ⓒ Option: Flexible drain, nylon bowl, element 0.3 μm

Y element internal structure

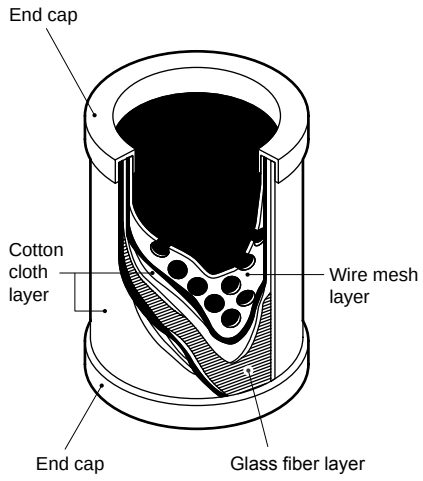

Dimensions CAD

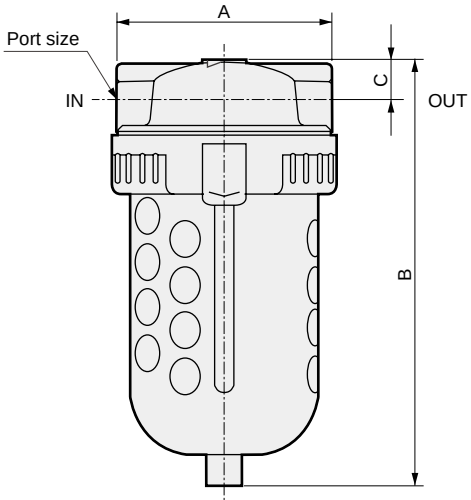

Model No.	Port size	A	B	C
1138-6/8C-EY	$Rc^3/_4$ /1	118	253.5	25.5
A1338-6/8C-Y	$Rc^3/_4$ /1	118	341.5	25.5
1126-10/12/16C-EY	$Rc1^1/_4$ / $1^1/_2$ / 2	203	518	48
1326-10/12/16C-Y	$Rc1^1/_4$ / $1^1/_2$ / 2	203	504	48

*1: A nylon tube with the bore size of ø5.7 to 6.0 can be directly connected to the drain outlet of manual cock.

*2: For metal bowl auto-drain, the drain outlet port size is Rc $^1/_4$.

● Pipe bracket: 6132
·Material: Steel
Zinc plated

Bracket - Pipe bracket thickness 4.5 mm

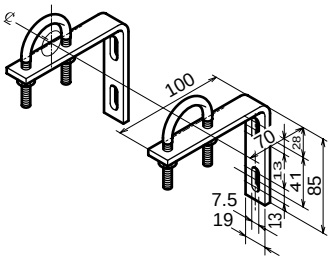

Model No.	Port size
6132-6C	$^3/_4$B
6132-8C	1B

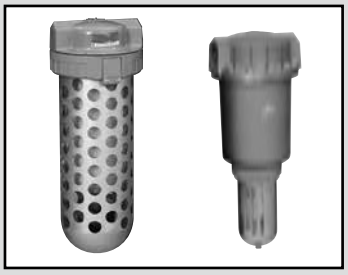

Micro alescer/micro naught (oil removal)

1238/1226/1226J Series

Oil content is to be 0.1 PPM w/w or less.
(Measurement/instrumentation and high-grade coating)

● Port size: Rc $^3/_4$ to Rc2

JIS symbol 

RoHS CAD

Specifications

Item		1238-6C-F1	1226-8C-F1	1226J-12C/16C-F1
Working fluid		Compressed air		
Max. working pressure	MPa	1.0 (≈150 psi, 10 bar)		
Proof pressure	MPa	1.5 (≈220 psi, 15 bar)		
Ambient / fluid temperatures	°C	5 (41°F) to 54 (129.2°F)		
Oil removal		0.1 PPM w/w (for inlet air temperature 30°C)		
Max. flow rate	m^3/min(ANR)	1.27	2.49	4.8
Port size	Rc	$^3/_4$	1	1 $^1/_2$, 2
Weight	kg	2.5	8.2	8.5
Mantle quantity		1	1	1
Mantle assembly model No. (A set of mantle and either O-ring for sealing or gasket)		1238-MANTLE -ASSY	1226-MANTLE -ASSY	1226J-MANTLE -ASSY

*1 : Max. flow rate is the atmospheric pressure conversion value where the inlet air pressure is 0.7 MPa and the initial pressure drop is 0.01 MPa.
*2 : The mantle assembly number indicates the part number that combines the mantle discrete number and O-ring or gasket number (parts list (6) on the following page).
*3 : Min. working pressure of N.C. auto-drain with manual cock (option "F1") is 0.15 MPa.

Flow characteristics

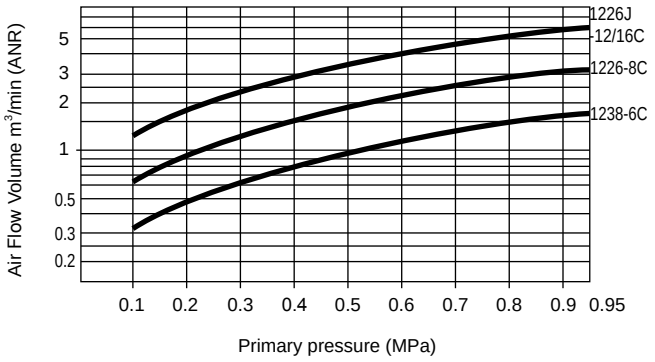

Option weight

* Add to the weight of the standard accessories. Unit: kg

	Drain discharge		Bowl material		
Code	E	F1	Z	M	MG
1238	0	0.02		0.7	0.86
1226	0	0.02	-0.025	0	0.17
1226J	0	0.02	-0.025	0	0.17

How to order

1238 – **6C** – **EM**

Ⓐ Model No.
Ⓑ Port size *1
Ⓒ Option *2 *3

[Example of model No.]
1238-6C-EM
Model: Micro alescer/ micro naught (oil removal)
Ⓑ Port size: Rc $^3/_4$
Ⓒ Option: Flexible drain, metal bowl

Code	Description	Ⓐ Model No. Large 1238	Large bore 1226	Large bore 1226J
Ⓑ Port size				
6C	Rc $^3/_4$	●		
8C	Rc1		●	
12C	Rc1 $^1/_2$			●
16C	Rc2			●
Ⓒ Option				
Drain discharge: Blank	Manual cock	●	●	●
Drain discharge: E	Flexible drain	●	●	●
Drain discharge: F1	NC auto-drain with manual cock (no exhaust when not pressurized)	●	●	●
Bowl material: Blank	Polycarbonate bowl	●	●	●
Bowl material: Z	Nylon bowl		●	●
Bowl material: M	Metal bowl	●	●	●
Bowl material: MG	Metal bowl with gauge	●	●	●

Precautions for model No. selection

*1 : If port size NPT thread is required, do not indicate nominal size C. (Example) 1238-6
*2 : For auto-drain, NO auto-drain with manual cock "F" cannot be selected.
*3 : Refer to page 480 for the auto-drain usage conditions.

Internal structure and parts list

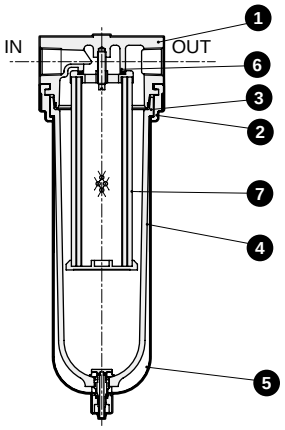

No.	Part name	Material		
		1238	1226	1226J
1	Cover	Zinc alloy die-casting	Aluminum alloy die-casting	
2	Clamp ring	Zinc alloy die-casting		
3	O-ring	Special nitrile rubber		
4	Bowl	Polycarbonate resin		
5	Bowl guard	Steel		
6	O-ring or gasket	Nitrile rubber		
7	Mantle	——		

Dimensions

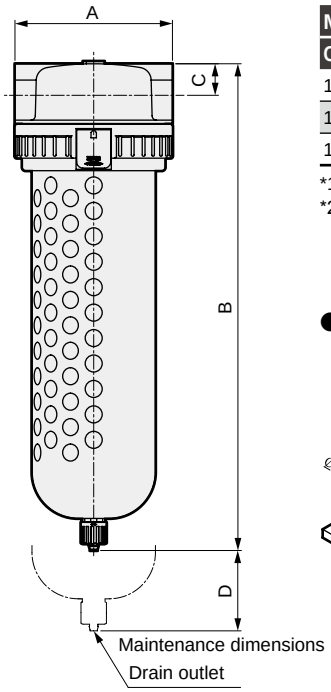

Model No. / Combination option	Port size	A	B					C	D
		All models	Blank	F1	E	M	F1M	All models	
1238-6C	Rc 3/4	118	365	365	354.5	351	375	25.5	200
1226-8C	Rc1	203	529	529	518	517	538	48	250
1226J-12C/16C	Rc1 1/2 / 2	203	529	529	518	517	538	48	250

*1: A nylon tube with the bore size of ø5.7 to 6.0 can be directly connected to the drain outlet of manual cock.
*2: For metal bowl auto-drain, the drain outlet port size is Rc 1/4.

● Pipe bracket: 6132
·Material: Steel
Zinc plated
Bracket - Pipe bracket thickness 4.5 mm

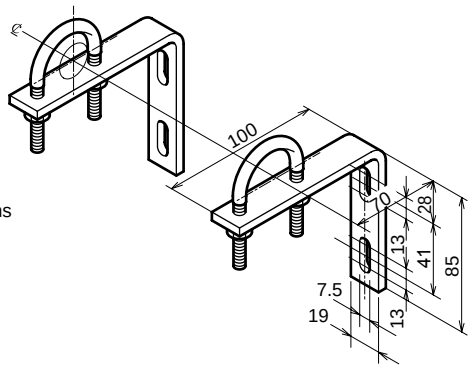

Model No.	Port size
6132-6C	3/4B
6132-8C	1B

Internal structure of mantle

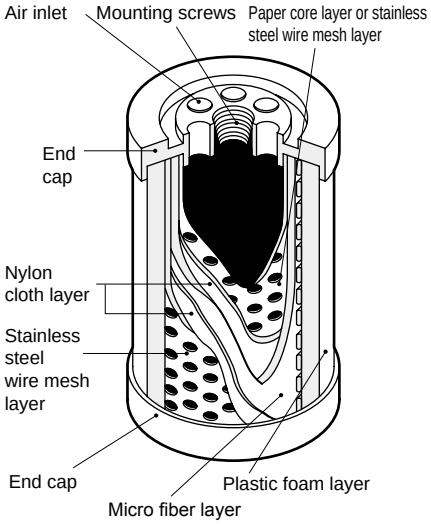

99% of oil particles in the compressed air are in the aerosol state. These aerosols (0.8 to 0.01 µm particles) cannot be captured by 3 µm/5 µm elements, or other mechanical methods. Micro alescer/micro naught is an air filter that removes aerosols effectively. The biggest factor for achieving this efficiency is the micro fiber layer. Borosilicate fibers (glass fibers) are used in the micro fiber layer. The many random fine fibers in this layer capture oil aerosols by direct collision, inertial collision, contacting and adhesion, or diffusion (Brownian motion) and cohesion by diffusion. The oil aerosols then form droplets.
The plastic foam layer on the mantle exterior prevents redispersion through air flow of the large liquid drops which are formed by cohesion of oil particles captured in the micro fiber layer. At the same time, the liquid droplets sink due to gravity in this plastic foam layer.
The micro fiber layer and plastic foam layer capture and cohere oil particles and separate oil in the compressed air.
If sulfur dioxide or chlorine gas is contained in the compressed air, they will enter the plastic foam layer. Also, it will swell due to organic compounds such as hydrocarbons, chlorinated hydrocarbons, ketones, aldehydes, amines, etc. Exercise caution during use.



1238/1226/1226J Series

Micro alescer/odor naught (odor removal)

Absorbing odor particles to achieve odorless compressed air.

● Port size: Rc 1/4 to Rc2

JIS symbol 

RoHS CAD

Specifications

Item		1238-6C-X	1226-8C-X	1226J-12C/16C-X
Appearance				
Working fluid		Compressed air		
Max. working pressure	MPa	1.0 (≈150 psi, 10 bar)		
Proof pressure	MPa	1.5 (≈220 psi, 15 bar)		
Max. inlet air temperature	°C	30 (86°F)		
Max. flow rate	m^3/min(ANR)	1.27	2.49	4.8
Port size	Rc	3/4	1	1/2, 2
Weight	kg	2.5	8.2	8.5
Mantle quantity		1	1	1
Mantle assembly model No. (A set of mantle and either O-ring for sealing or gasket)		1238-MANTLE-ASSY-X	1226-MANTLE-ASSY-X	1226J-MANTLE-ASSY-X

*1 : Max. flow rate is the atmospheric pressure conversion value where the inlet air pressure is 0.7 MPa and pressure drop is 0.01 MPa.

*2 : The mantle assembly number indicates the part number that combines the mantle discrete number and O-ring or gasket number (parts list (6) on page 455).

Option weight

* Add to the weight of the standard accessories. Unit: kg

	Bowl material		
Code	Z	M	MG
1238-X		0.7	0.86
1226-X	-0.025	0	0.17
1226J-X	-0.025	0	0.17

Flow characteristics (max. processing flow rate)

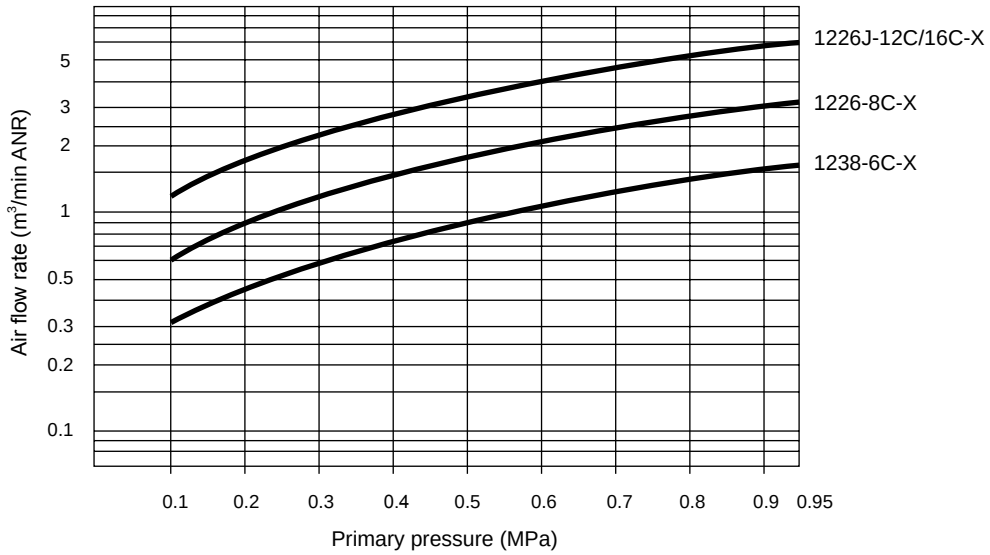

How to order

1238 – 6C – MX

Ⓐ Model No.

Ⓑ Port size *1

Ⓒ Option

Code		Description	Ⓐ Model No. Large 1238-X	Large bore 1226-X	Large bore 1226J-X
Ⓑ Port size					
6C		$Rc^3/_4$	●		
8C		Rc1		●	
12C		$Rc1\ ^1/_2$			●
16C		Rc2			●
Ⓒ Option					
Drain disch	**Blank**	Manual cock	●	●	●
Bowl material	**Blank**	Polycarbonate bowl	●	●	●
	Z	Nylon bowl		●	●
	M	Metal bowl	●	●	●
	MG	Metal bowl with gauge	●	●	●
Element	**X**	Odor naught	Standard equipment		

Precautions for model No. selection

*1: If port size NPT thread is required, do not indicate nominal size C. (Example) 1238-6-X

[Example of model No.]

1238-6C-MX

Model: Micro alescer/
odor naught (odor removal)

Ⓑ Port size: Rc $^3/_4$

Ⓒ Option: Metal bowl

Internal structure and parts list

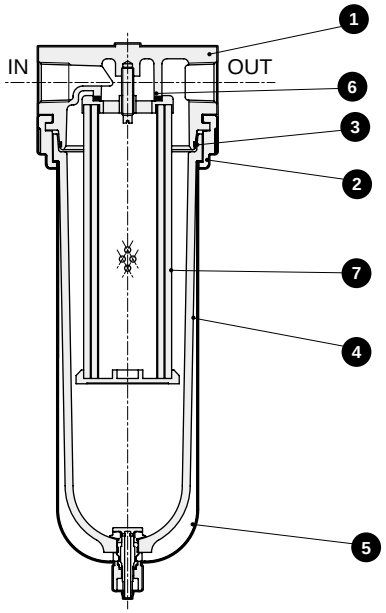

No.	Part name	Material
1	Cover	Zinc alloy die-casting
2	Clamp ring	Zinc alloy die-casting
3	O-ring	Special nitrile rubber
4	Bowl	Polycarbonate resin
5	Bowl guard	Steel
6	O-ring or gasket	Nitrile rubber
7	Mantle	——

Dimensions

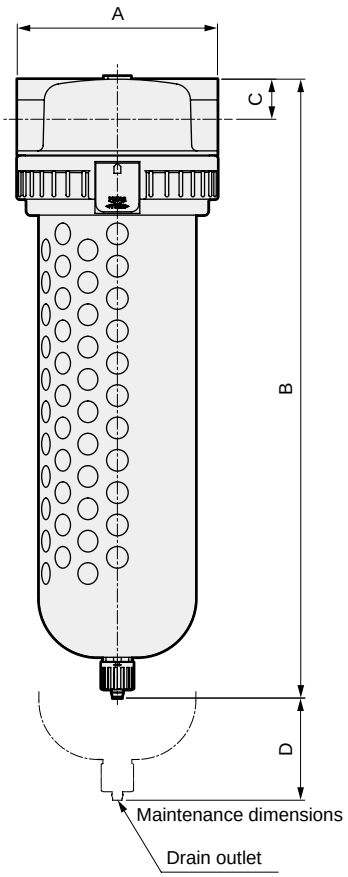

● Pipe bracket: 6132
·Material: Steel
Zinc plated
Bracket - Pipe bracket thickness 4.5 mm

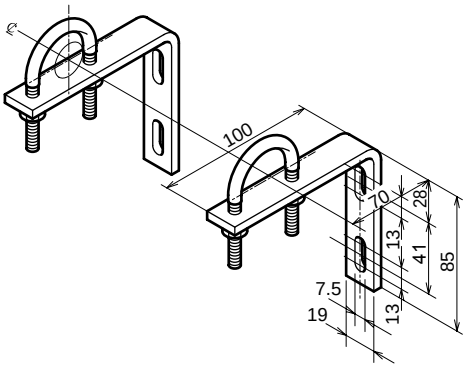

Model No.	Port size
6132-6C	$^3/_4$B
6132-8C	1B

Model No. / Combination option	Port size	A	B		C	D
			—	M		
1238-6C-X	Rc$^3/_4$	118	365	351	25.5	200
1226-8C-X	Rc1	203	529	517	48	250
1226J-12C/16C-X	Rc1$^1/_2$ / 2	203	529	517	48	250

*1: A nylon tube with the bore size of ø5.7 to 6.0 can be directly connected to the air exhaust port of manual cock.
*2: The air exhaust port of the metal bowl has a cock (thumbscrew), so direct piping is not possible.

Internal structure of mantle

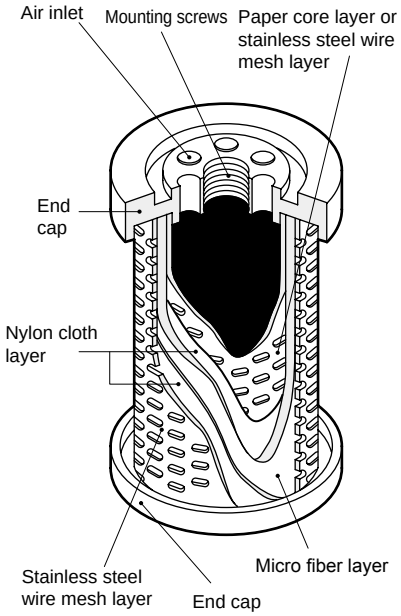

If a lubrication air compressor is used, oil in the air compressor will turn into aerosol oil particles or vaporized oil particles by heat. 99% of oil particles are in an aerosol state with the remaining in a vapor state. Oil particles in the aerosol state are removed up to 0.1 PPM w/w by the micro alescer air filter/ micro naught when the inlet air temperature is 30˚C, however, oil particles in the vapor state cannot be removed.
Oil particles in the vapor state are turned into 0.002 to 0.0003 µm gas molecules, so they cannot be captured mechanically.
Activated carbon is used in the micro fiber layer of the micro alescer air filter/odor naught to capture oil particles in the vapor state by suction.

Activated carbon is impregnated to borosilicate fibers (glass fibers) in the micro fiber layer to adsorb oil particles in the vapor state passing through that layer. Activated carbon is in the powdered state with a size of 75 µm and is covered by a nylon cloth layer to prevent air flow entry.
Generally, odors are particles with the size of gas molecules and can be removed by physical adsorption or chemical adsorption. Activated carbon is a hydrophobic adsorbent. Because of this, odors can be removed only by passing air through activated carbon without affected by water vapor in the compressed air.
A lot of cracked gas odors (aromatic hydrocarbon) along with oil odors are contained in the compressed air, and these cracked gas odors can be also removed.

MEMO

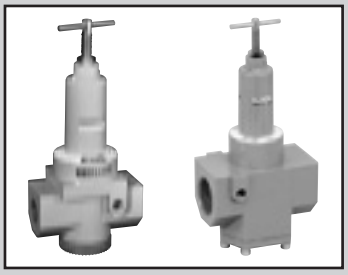

Regulator

2215/2216 Series

● Port size: Rc $^3/_4$ to Rc2

JIS symbol 

RoHS CAD

Specifications

Item		2215-6C/8C/10C	2216-12C/16C
Working fluid		Compressed air	
Max. working pressure	MPa	2.06 (≈300 psi, 20.6 bar)	
Proof pressure	MPa	3.09 (≈450 psi, 30.9 bar)	
Ambient / fluid temperatures	°C	5 (41°F) to 65 (149°F)	
Set pressure	MPa	0.07 (≈10 psi, 0.7 bar) to 0.83 (≈120 psi, 8.3 bar)	
Pressure relief		With relief mechanism	
Port size	Rc	$^3/_4$, 1, 1 $^1/_4$	1 $^1/_2$, 2
Weight	kg	2.5	4.6

*1: The pressure gauge for "HG" is 0 to 0.4 MPa and 0 to 2.0 MPa.
*2: The relief pressure for the high pressure type (H) is the value 0.13 MPa higher than the set pressure.

Option weight

* Add to the weight of the standard accessories. Unit: kg

	Plastic knob	Pressure gauge
Code	K	G
2215	0.01	0.114
2216	0.01	0.114

Flow characteristics

● 2215-6C/8C/10C Rc$^3/_4$, 1, 1 $^1/_4$

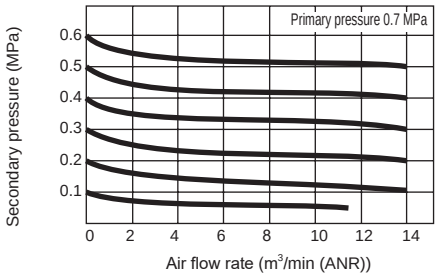

● 2216-12/16C Rc1$^1/_2$, 2

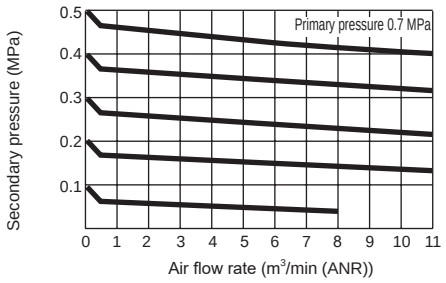

Pressure characteristics

● 2215

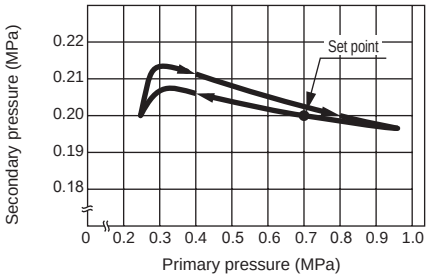

● 2216

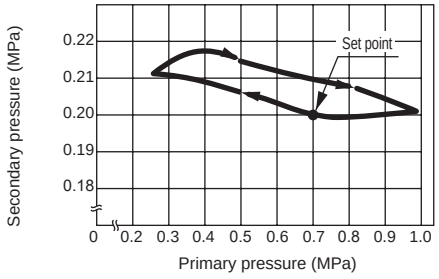

How to order

2215 – 6C – NKG

Ⓐ Model No.

Ⓑ Port size *1

Ⓒ Option *2 to 5

[Example of model No.]
2215-6C-NKG
Model: Regulator large
Ⓑ Port size: Rc 3/4
Ⓒ Option: Non-relief, plastic knob, pressure gauge enclosed

Code		Description	Ⓐ Model No. Large 2215	Ⓐ Model No. Large bore 2216 (MTO)
Ⓑ Port size				
6C		Rc3/4	●	
8C		Rc1	●	
10C		Rc1 1/4	●	
12C		Rc1 1/2		●
16C		Rc2		●
Ⓒ Option				
Regulator	**Blank**	Standard	●	●
	N	Non-relief	●	●
	H	High pressure (MPa)	● (0.07 to 1.23)	● (0.07 to 1.23)
	K	Plastic knob	●	●
Included product	**Blank**	Not included	●	●
	G	Pressure gauge	●	●

Precautions for model No. selection

*1 : If port size NPT thread is required, do not indicate nominal size C. (Example) 2215-6
If a pressure gauge is selected, the NPT thread pressure gauge is enclosed.
*2 : Options can be combined.
*3 : The pressure adjusting range of "H" high pressure is 0.07 to 1.23 MPa.
*4 : If the option code "G" is indicated, a pressure gauge is enclosed.
G59D-8-P10 pressure gauge comes with types 2215 and 2216 (G59D-8-P04 for low pressure and G59D-8-P20 for high pressure). Refer to related products (page 363) for pressure gauge specifications.

Internal structure and parts list

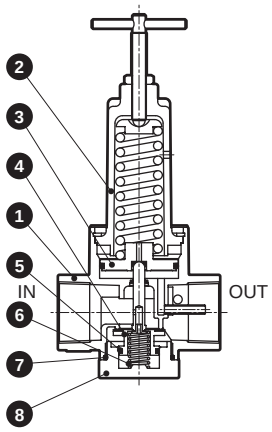

No.	Part name	Material 2215	Material 2216
1	Body	Zinc alloy die-casting	
2	Cover	Zinc alloy die-casting	
3	Piston assembly	Zinc alloy die-casting/nitrile rubber	
4	Valve assembly	Copper alloy/hydrogenated nitrile rubber	
5	O-ring	Fluoro rubber	
6	Bottom spring	Stainless steel	
7	O-ring	Nitrile rubber	
8	Bottom plug	Zinc alloy die-casting	

Repair parts list

No.	Part name		Model No. 2215	Model No. 2216
3	Diaphragm assembly	Pressure relief	2215-PISTON-ASSY	2215-PISTON-ASSY
		Non-relief	2215-PISTON-ASSY-N	2215-PISTON-ASSY-N
4	Valve assembly		2215-VALVE-ASSY	2216-VALVE-ASSY
5				

Functions

(1) Adjusting screw
Adjusting screw to adjust secondary pressure is turned clockwise to increase pressure.
(2) Relief valve
If the secondary pressure becomes higher than the set pressure, the valve stem and diaphragm section separate to release compressed air to the atmosphere from the relief valve, preventing the secondary side set pressure from increasing abnormally.
(3) Diaphragm
The balance between the force of the pressure adjusting spring and the force applied to the diaphragm bottom (secondary side pressure) is maintained and the valve system is opened and closed to supply accurate and stable pressure (set pressure) to the secondary side. Large regulator 2215 balances pressure adjustment spring by the piston.
(4) Valve system
If the diaphragm and the pressure adjustment spring lose balance, the compressed air on the primary side is supplied as required to the secondary side. A valve with a large bore size is used to achieve excellent flow characteristics.
(5) Gauge port
A gauge port is placed near the OUT side from the center section to measure the secondary side pressure accurately. Two gauge ports are provided.

Dimensions CAD

● 2215/2216

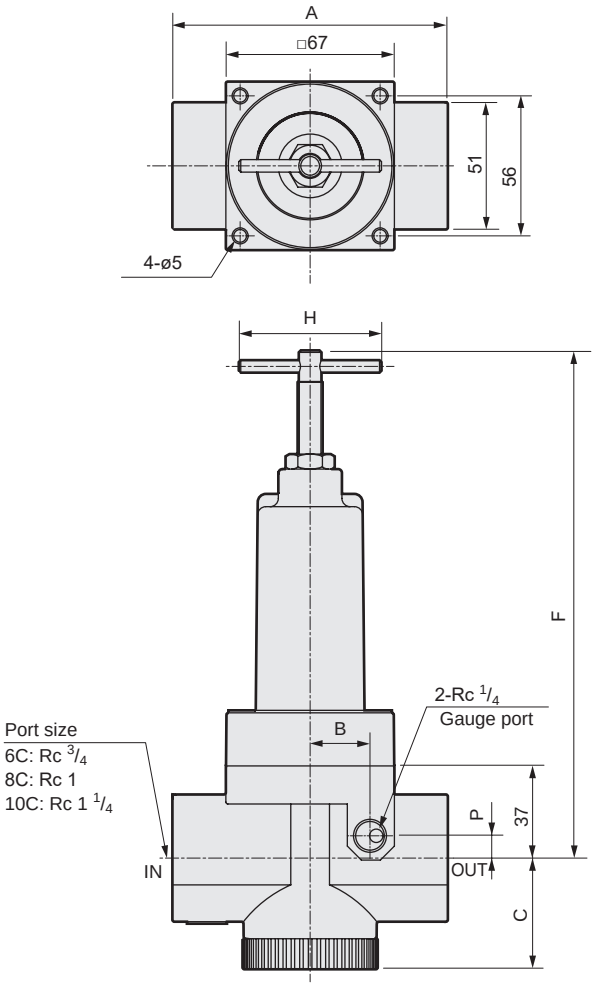

Model No.	A	B	C	F	H	P	Port size
2215	110	24	44	206	63(ø48)	9	Rc3/4, 1, 1 1/4
2216	135	38	72	216	63(ø48)	15	Rc1 1/2, 2

● Pipe bracket: 6132
· Material: Steel
Zinc plated
Bracket - Pipe bracket thickness 4.5 mm

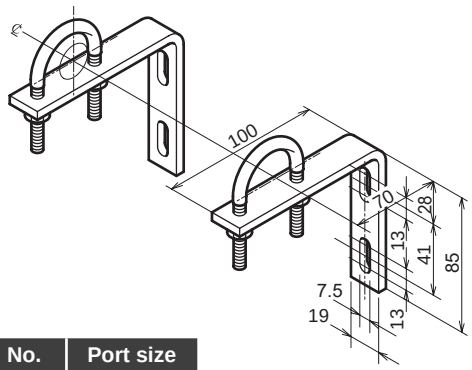

Model No.	Port size
6132-6C	3/4B
6132-8C	1B

MEMO

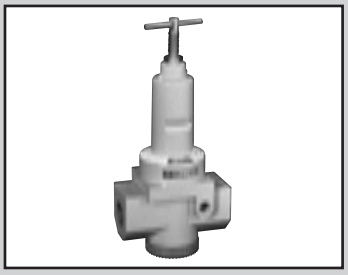

Reverse regulator (check valve integrated)

2415 Series

Smooth discharge of secondary pressure with check valve. No bypass circuit required and easy piping.

● Port size: Rc $^3/_4$ to Rc1 $^1/_4$

JIS symbol

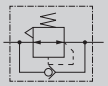

RoHS CAD

Specifications

Item		2415-6C/8C/10C
Working fluid		Compressed air
Max. working pressure	MPa	1.0 (≈150 psi, 10 bar)
Proof pressure	MPa	1.5 (≈220 psi, 15 bar)
Ambient / fluid temperatures	°C	5 (41°F) to 65 (149°F)
Set pressure	MPa	0.07 (≈10 psi, 0.7 bar) to 0.83 (≈120 psi, 8.3 bar)
Pressure relief		With relief mechanism
Port size	Rc	$^3/_4$, 1, 1$^1/_4$
Weight	kg	2.5

*1: Refer to the following graph for the set pressure range for back pressure.
*2: Pressure gauge for "LG" is 0 to 0.4 MPa.

Option weight

* Add to the weight of the standard accessories. Unit: kg

Plastic knob	Pressure gauge
K	G
0.01	0.114

Ozone-proof specifications (Ending Page 17)

2415 – ..... – P11

Flow characteristics

● 2415-6C/8C/10C Rc$^3/_4$, 1, 1 $^1/_4$

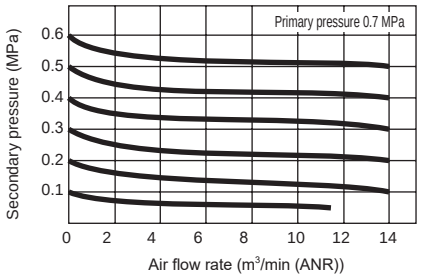

Pressure characteristics

● 2415

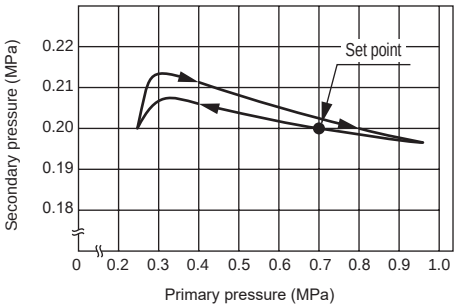

Note on model No. selection

Always refer to the following graph for the set pressure range for back pressure.
For example, if the set pressure of a model 2415 is set to 0.67 MPa and the secondary side back pressure increases more than 0.42 MPa, the secondary pressure is not released to the primary side.

● Set pressure range to back pressure

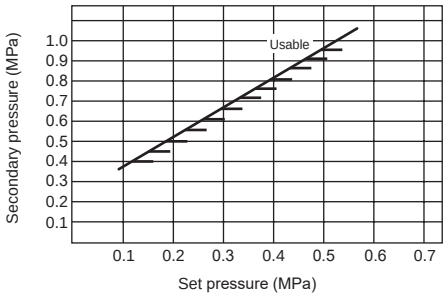

How to order

2415 – 6C – NKG

- 2415: Model No.
- 6C: Ⓐ Port size *1
- NKG: Ⓑ Option *2 *3

[Example of model No.]
2415-6C-NKG
Model: Reverse regulator (check valve integrated)
Ⓐ Port size: Rc $^3/_4$
Ⓑ Option: Non-relief, plastic knob, pressure gauge enclosed

Code		Description
Ⓐ Port size		
6C		Rc$^3/_4$
8C		Rc1
10C		Rc1 $^1/_4$
Ⓑ Option		
Regulator	Blank	Standard
	N	Non-relief
	K	Plastic knob
Included product	Blank	Not included
	G	Pressure gauge

⚠ Precautions for model No. selection

*1 : If port size NPT thread is required, do not indicate nominal size C. (Example) 2415-6
If a pressure gauge is selected, the NPT thread pressure gauge is enclosed.
*2 : Options can be combined.
*3 : If the option code "G" is indicated, a pressure gauge is enclosed.
The pressure gauge supplied is G59D-8-P10 (G59D-8-P04 for low pressure). Refer to related products (page 363) for pressure gauge specifications.

Internal structure

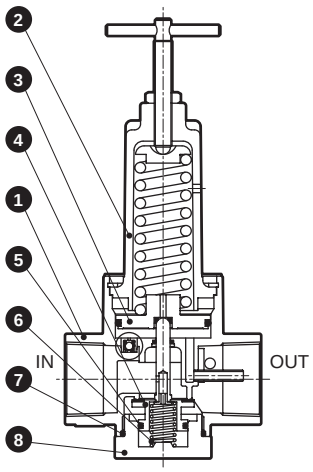

No.	Part name	Material	
		2215	2216
1	Body	Zinc alloy die-casting	
2	Cover	Zinc alloy die-casting	
3	Piston assembly	Zinc alloy die-casting/nitrile rubber	
4	Valve assembly	Copper alloy/hydrogenated nitrile rubber	
5	O-ring	Fluoro rubber	
6	Bottom spring	Stainless steel	
7	O-ring	Nitrile rubber	
8	Bottom plug	Zinc alloy die-casting	

Applications

● Circuit diagram

When cylinder head side and rod side pressures differ

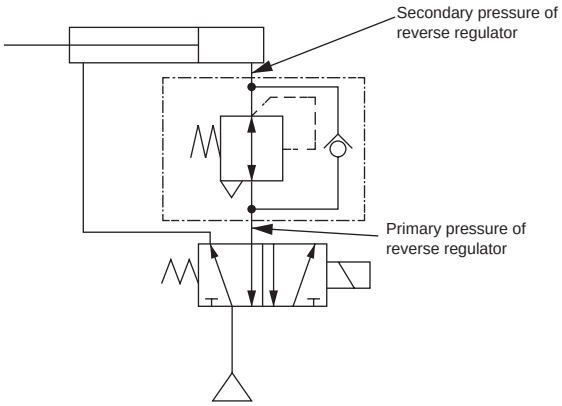

Functions

If the primary pressure is applied from IN side, the check ball is forced upward to close as a regulator. If the pressure in the primary side is exhausted by the switching valve, the check ball is forced downward at the same time to exhaust the pressure in the piston chamber to the IN side, passing through the check valve. If the pressure in the piston chamber is exhausted, causing a pressure drop, the piston on the top is pushed down by the pressure adjustment spring and the valve seat section opens to exhaust the air on the OUT side.

Dimensions CAD

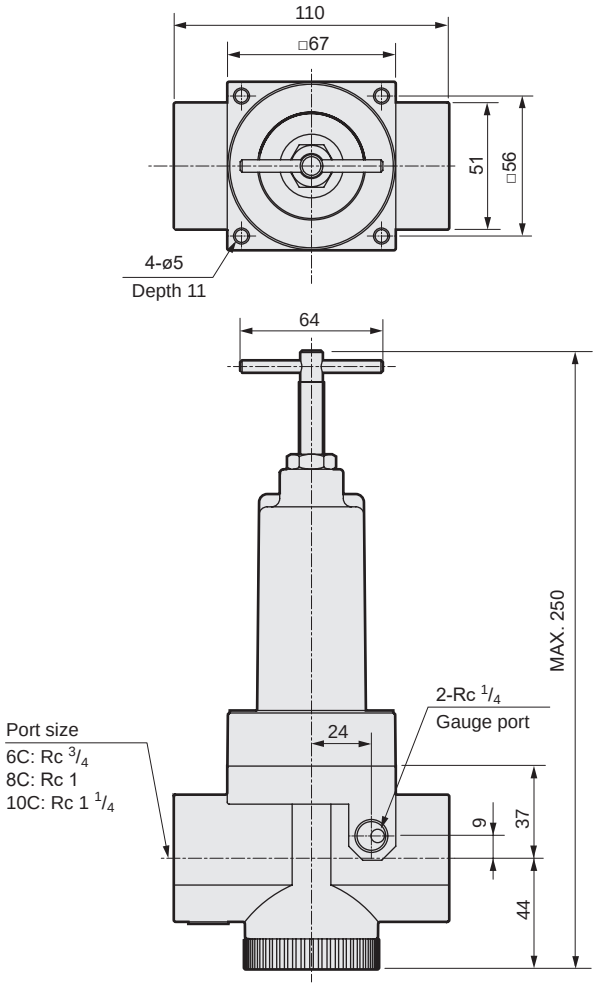

● Pipe bracket: 6132

·Material: Steel

Zinc plated

Bracket - Pipe bracket thickness 4.5 mm

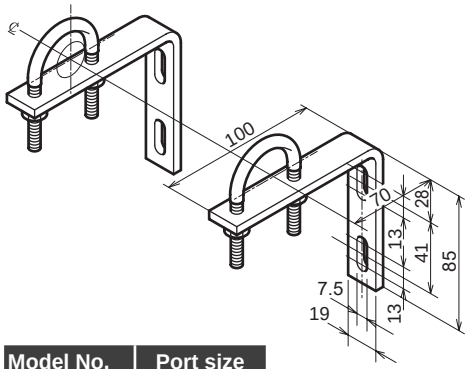

Model No.	Port size
6132-6C	3/4B
6132-8C	1B

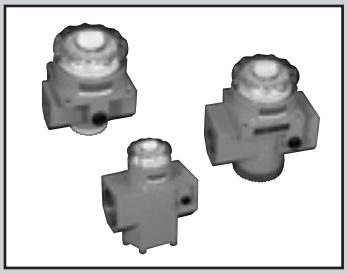

Dial air regulator

2302/2303/2304 Series

Dial provided to enable easy pressure adjustment. Control of large flow rate is also enabled.

● Port size: Rc 1/4 to Rc2

JIS symbol 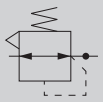

RoHS CAD

Specifications

Item	2302-2C/3C/4C/6C	2303-6C/8C/10C	2304-12C/16C
Working fluid	Compressed air		
Max. working pressure MPa	2.06 (≈300 psi, 20.6 bar)		
Proof pressure MPa	3.09 (≈450 psi, 30.9 bar)		
Ambient / fluid temperatures °C	5 (41°F) to 65 (149°F)		
Set pressure MPa	0.05 (≈7.3 psi, 0.5 bar) to 1.08 (≈160 psi, 10.8 bar)		
Pressure relief	With relief mechanism		
Port size Rc	1/4 / 3/8 / 1/2 / 3/4	3/4/1/1 1/4	1 1/2 / 2
Weight kg	1	1.8	4
Constant bleed flow ℓ/min ANR	3 or less (air consumption)		

*1: Check that the primary pressure is at least 0.1 MPa or more than the set pressure .
*2: The dial scale is a guide. Check the pressure gauge for precise secondary pressure.

Flow characteristics

● 2302

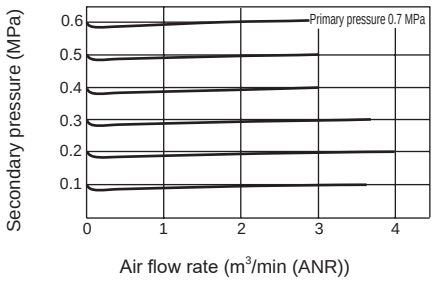

● 2303

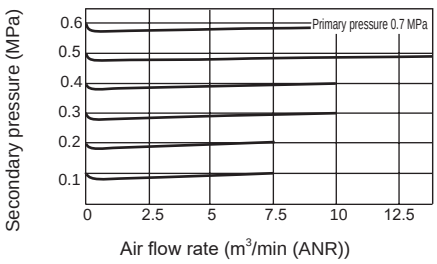

● 2304

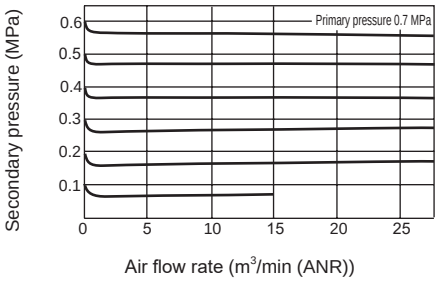

Pressure characteristics

● 2302

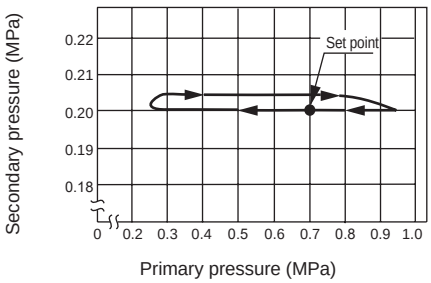

● 2303

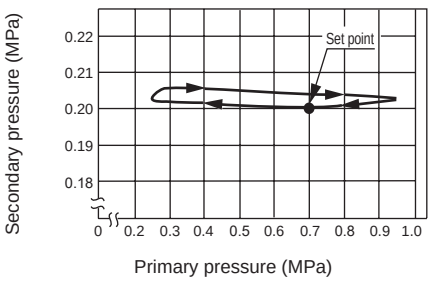

● 2304

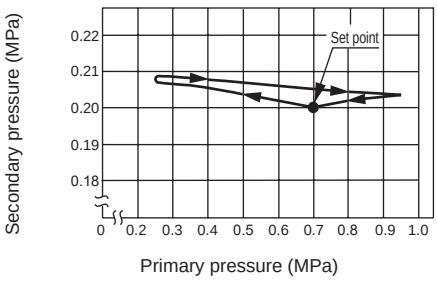

How to order

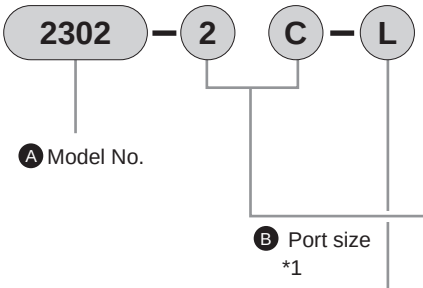

Code	Description	A Model No. 2302 Standard	2303 Large	2304 Large Bore Diameter
B Port size				
2C	$Rc^1/_4$	●		
3C	$Rc^3/_8$	●		
4C	$Rc^1/_2$	●		
6C	$Rc^3/_4$	●	●	
8C	Rc1		●	
10C	Rc1 $^1/_4$		●	
12C	Rc1 $^1/_2$			●
16C	Rc2			●
C Option				
Blank	Standard	●	●	●
L	Low pressure	●	●	●
G	Pressure gage (G59D-8-P10)	●	●	●

Precautions for model No. selection

*1 : If port size NPT thread is required, do not indicate nominal size C.
(Example) 2302-2
*2 : The set pressure range for option "L" is 0.05 to 0.27 MPa.
*3 : Option "G" for low pressure is G59D-8-P04. Refer to related products (page 363) for pressure gauge specifications.

Internal structure and parts list

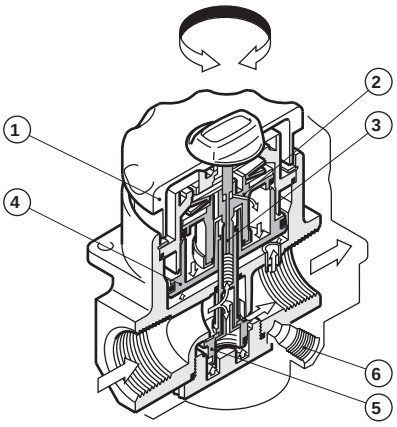

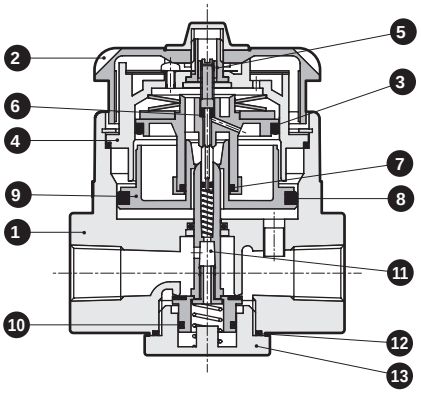

No.	Part name	Material 2302	2303	2304
1	Body	Zinc alloy die-casting		
2	Adjusting knob	Polycarbonate resin		
3	O-ring	Fluoro rubber		
4	O-ring	Fluoro rubber		
5	Bonnet assembly	Zinc alloy die-casting/Brass, etc.		
6	O-ring	Nitrile rubber		
7	O-ring	Nitrile rubber		
8	O-ring	Fluoro rubber		
9	Bottom piston	Polyacetal resin		Aluminum
10	O-ring	Fluoro rubber		
11	Main valve assembly	Brass/polyacetal resin/hydrogenated nitrile rubber		Brass/hydrogenated nitrile rubber
12	O-ring	Nitrile rubber		
13	Bottom plug	Polyacetal resin	Zinc alloy die-casting	

Functions

(1) Adjusting knob
Adjusting knob can be turned clockwise to set the pressure within a range of 0.05 to 1.08 MPa. Set secondary pressure to set pressure or moreA stopper is provided to prevent setting.
(2) Upper piston
Pilot pressure is adjusted by the upper piston and the pressure adjustment spring according to pilot singles from the pilot valve.
(3) Pilot valve
Turning the adjusting pilot knob shifts the pilot valve position to set the pilot pressure.
(4) Bottom piston
A valve system is opened and closed by the balance between the pilot pressure and secondary pressure. If the secondary pressure increases more than the set pressure, a relief valve opens to release the pressure to the atmosphere. (5) Valve system
If the pilot pressure and secondary pressure lose balance, compressed air on the primary side will be supplied as required to the secondary side. A valve with a large bore size is used to achieve excellent flow characteristics.
(6) Gauge port
Pressure scale is provided to enable rough pressure setting without another pressure gauge. If the accurate set pressure is required, install a pressure gauge to the gauge port.

Consumable parts list

Part name	Model No. 2302	2303	2304
Consumable parts kit *1	2302-KIT	2303-KIT	2304-KIT
Valve assembly kit *2	2302-VALVE-ASSY	2303-VALVE-ASSY	2304-VALVE-ASSY

*1: Set of main valve assembly, bottom piston, O-ring, etc.
*2: Set of main valve assembly, O-ring, etc.

Dimensions CAD

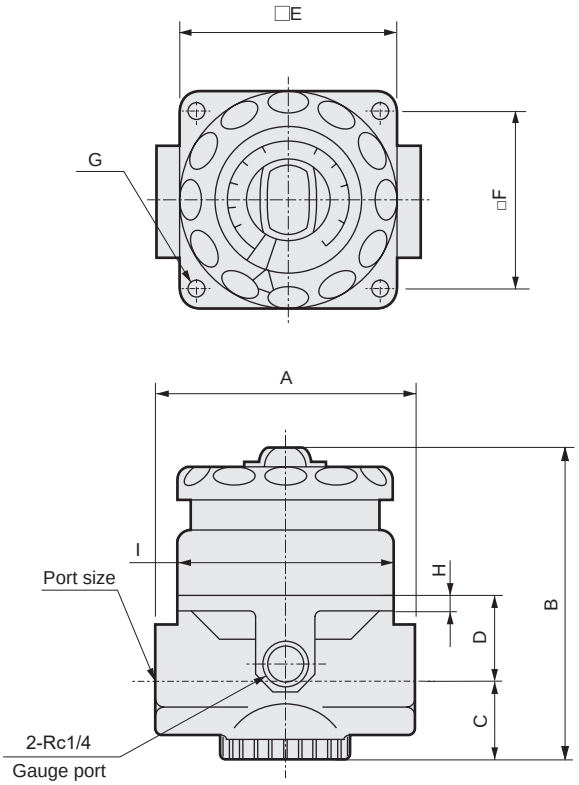

Item	Port size	A	B	C	D	E	F	G	H	I
2302-2C/3C/4C/6C	Rc1/4 / 3/8 / 1/2 / 3/4	81	99	24	28	67.5	56	4-ø5.6 through	6	ø67
2303-6C/8C/10C	Rc3/4/1/1 1/4	110	129	44	37	67.5	56	4-ø5.1 depth 11	-	ø67
2304-12C/16C	Rc1 1/2 / 2	135	170	71	36	-	-	-	-	ø67

*1: The dial scale resolution may differ depending on the product.

● Pipe bracket: 6132
· Material: Steel
Zinc plated
Bracket - Pipe bracket thickness 4.5 mm

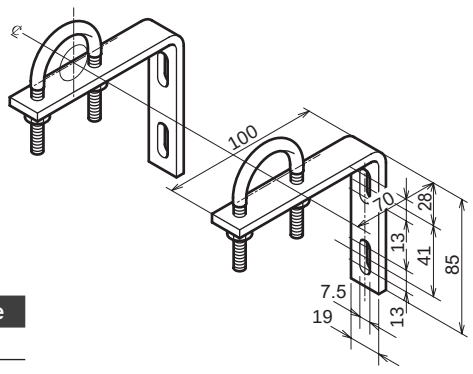

Model No.	Port size
6132-2C	1/4B
6132-3C	3/8B
6132-4C	1/2B
6132-6C	3/4B
6132-8C	1B

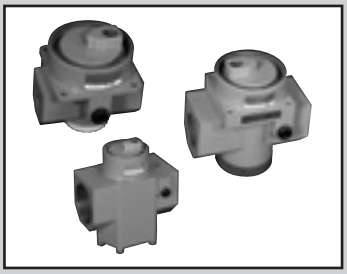

Remote dial air regulator

2302/2303/2304 Series

With pilot port for pressure setting/Remote control is enabled.

● Port size: Rc 1/4 to Rc2

JIS symbol

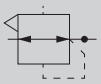

RoHS CAD

Specifications

Item		2302-2C/3C/4C/6C-R	2303-6C/8C/10C-R	2304-12C/16C-R
Working fluid		Compressed air		
Max. working pressure	MPa	2.06 (≈300 psi, 20.6 bar)		
Proof pressure	MPa	3.09 (≈450 psi, 30.9 bar)		
Ambient / fluid temperatures	°C	5 (41°F) to 65 (149°F)		
Set pressure	MPa	0.05 (≈7.3 psi, 0.5 bar) to 1.08 (≈160 psi, 10.8 bar)		
Pressure relief		With relief mechanism		
Port size	Rc	1/4 / 3/8 / 1/2 / 3/4	3/4/1/1 1/4	1 1/2 / 2
Weight	kg	1	1.8	4
Constant bleed quantity	ℓ/min ANR	3 or less (air consumption)		

Note: Check that the primary pressure is at least 0.1 MPa higher than the set pressure .

Flow characteristics

● 2302-2/3/4/6C-R

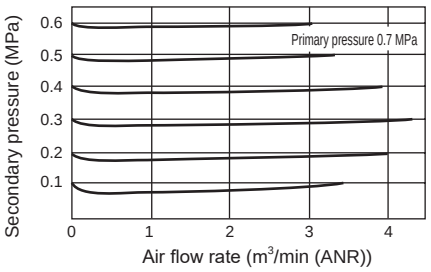

● 2303-6/8/10C-R

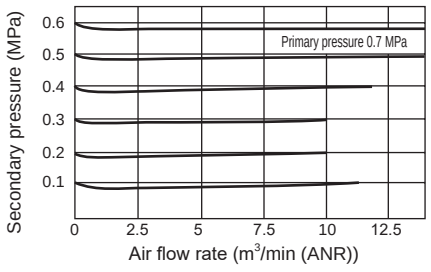

● 2304-12/16C-R

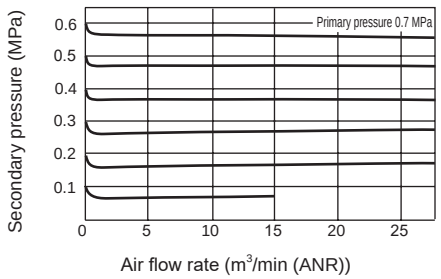

How to order

2302 – 2C – R G

- 2302: Ⓐ Model No.
- 2C: Ⓑ Port size
- R: Remote control type
- G: Ⓒ Pressure gauge

Code	Description	Ⓐ Model No. 2302 Standard	2303 Large	2304 Large bore size
Ⓑ Port size				
2C	Rc1/4	●		
3C	Rc3/8	●		
4C	Rc1/2	●		
6C	Rc3/4	●	●	
8C	Rc1		●	
10C	Rc1 1/4		●	
12C	Rc1 1/2			●
16C	Rc2			●
Ⓒ Pressure gauge				
Blank	Not included	●	●	●
G	Pressure gauge (G59D-8-P10)	●	●	●

Precautions for model No. selection

*1 : If port size NPT thread is required, do not indicate nominal size C. (Example) 2302-2-R

*2 : Refer to Related Products (page 363) for the included "G" pressure gauge.

Internal structure and parts list

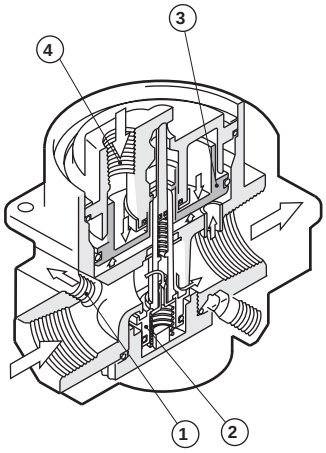

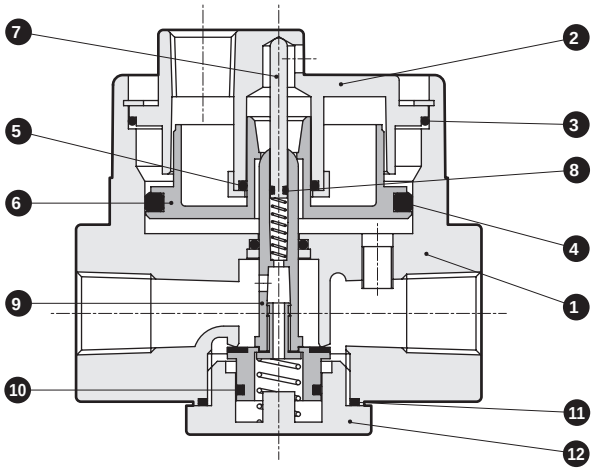

No.	Part name	Material		
		2302-R	2303-R	2304-R
1	Body	Zinc alloy die-casting		
2	Cover	Zinc alloy die-casting		
3	O-ring	Fluoro rubber		
4	O-ring	Fluoro rubber		
5	O-ring	Nitrile rubber		
6	Bottom piston	Polyacetal resin		Aluminum
7	Pilot valve	Brass		
8	O-ring	Nitrile rubber		
9	Main valve assembly	Brass/polyacetal resin/hydrogenated nitrile rubber		Brass/hydrogenated nitrile rubber
10	O-ring	Fluoro rubber		
11	O-ring	Nitrile rubber		
12	Bottom plug	Polyacetal resin	Zinc alloy die-casting	

Consumable parts list

Part name	Model No.		
	2302-R	2303-R	2304-R
Consumable parts kit *1	2302-R-KIT	2303-R-KIT	2304-R-KIT
Valve assembly kit *2	2302-R-VALVE-ASSY	2303-R-VALVE-ASSY	2304-R-VALVE-ASSY

*1: Set of main valve assembly, bottom piston, O-ring, etc.
*2: Set of main valve assembly, O-ring, etc.

Functions

(1) Air outlet for control
Compressed air on the primary side is supplied to the pilot regulator. (Excluding 2302-R)
(2) Valve stem
If the pilot pressure and secondary pressure lose balance, compressed air on the primary side will be supplied as required to the secondary side. A valve with a large bore size is used to achieve excellent flow characteristics.
(3) Bottom piston
A valve stem is opened and closed by the balance between the pilot pressure and secondary pressure. If the secondary pressure increases more than the set pressure, a relief valve opens to release the pressure to the atmosphere. (4)
Pilot pressure inlet
The pilot pressure set by pilot regulator is supplied.

Dimensions

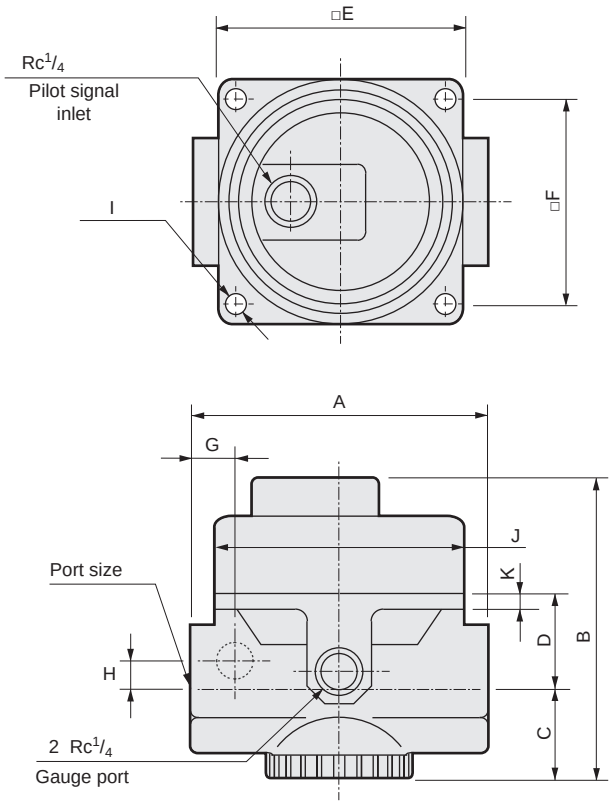

Item	Port size	A	B	C	D	E	F	G	H	I	J	K
2302-2C/3C/4C/6C-R	Rc1/4 / 3/8 / 1/2 / 3/4	81	82	25	27	67.5	56	-	-	4-ø5.6 through	ø67	4.6
2303-6C/8C/10C-R	Rc3/4/ 1 / 1/4	110	111	44	37	67.5	56	25.4	0	4-ø5.1 depth 11	ø67	-
2304-12C/16C-R	Rc1 1/2 / 2	135	152	71	36	-	-	27.5	17	-	ø67	-

Note: Refer to the following for dimensions of the bracket.

● Pipe bracket: 6132
· Material: Steel
Zinc plated
Bracket - Pipe bracket thickness 4.5 mm

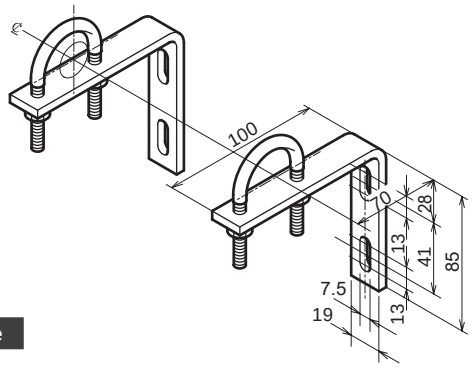

Model No.	Port size
6132-2C	1/4B
6132-3C	3/8B
6132-4C	1/2B
6132-6C	3/4B
6132-8C	1B

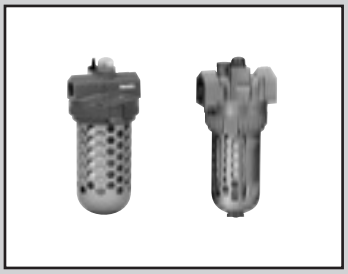

Lubricator/econo-mist

3003E/3004E/3005E Series

Supplying fine oil mist (oil fog).

● Port size: Rc $^3/_4$ to Rc2

JIS symbol 

RoHS CAD

Specifications

Item		3003E-6C/8C	3004E-10C/12C	3005E-16C
Appearance				
Working fluid		Compressed air		
Max. working pressure	MPa	1.0 (≈150 psi, 10 bar)		
Proof pressure	MPa	1.5 (≈220 psi, 15 bar)		
Ambient / fluid temperatures	°C	5 (41°F) to 65 (149°F)		
Oil used		Turbine oil Class 1, ISO VG32 (spindle oil cannot be used)		
Oil storage capacity	cm^3	660	660	660
Port size	Rc	$^3/_4$, 1	1 $^1/_4$, 1 $^1/_2$	2
Weight	kg	2.4	3.5	4.5
Bowl guard		Standard equipment		
Min. drip flow rate	ℓ/min (ANR)	60	200	200

*1: The min. drip flow rate is the value at which five drops of oil drip per minute when the primary pressure is 0.5 MPa.

Oil drip rate

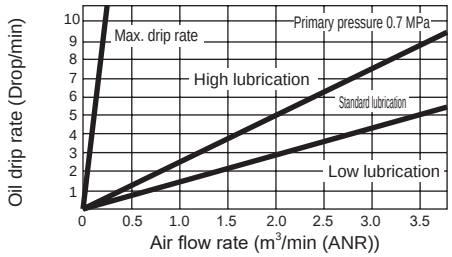

Option weight

* Add to the weight of the standard accessories. Unit: kg

	Drain disch	Bowl material					
Code	C	Z	M	MG	MG2	MG8	MG20
3003E	0	-0.025	0	0.17	8	18	28
3004E	0	-0.025	0	0.17	7	17	27
3005E	0	-0.025	0	0.17	7	17	27

Flow characteristics

● 3003E-6C Rc $^3/_4$

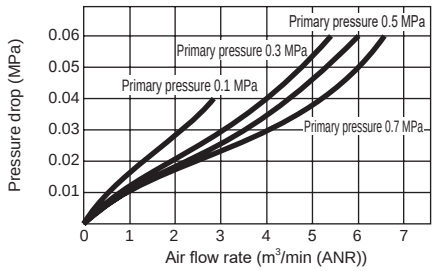

● 3003E-8C Rc1

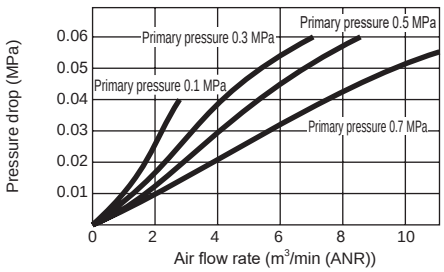

● 3004E-10C Rc1 $^1/_4$

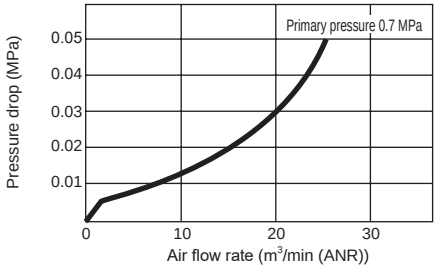

● 3004E-12C Rc1 $^1/_2$

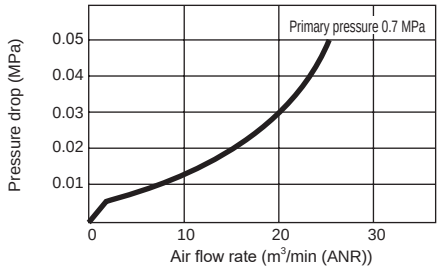

● 3005E-16C Rc2

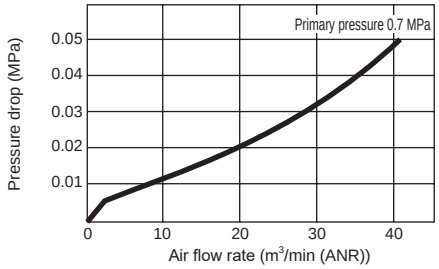

How to order

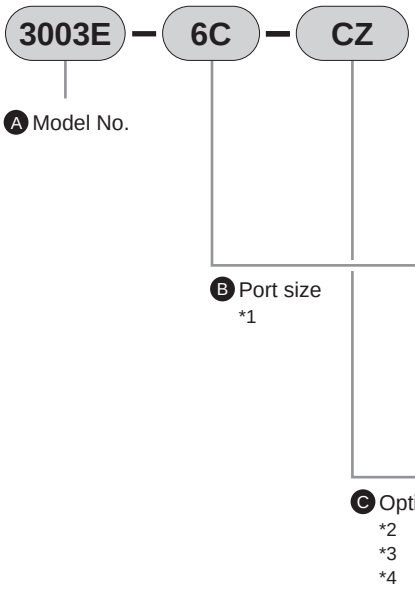

Code		Description	A Model No. Large 3003E	Large bore 3004E	Large bore 3005E
B Port size					
6C		$Rc^{3}/_{4}$	●		
8C		Rc1	●		
10C		$Rc1\ ^{1}/_{4}$		●	
12C		$Rc1\ ^{1}/_{2}$		●	
16C		Rc2			●
C Option					
Drain discharge	**Blank**	Blank bowl	●	●	●
	C	Manual cock (M/MG: Cock)	●	●	●
Bowl material	**Blank**	Polycarbonate	●	●	●
	Z	Nylon bowl	●	●	●
	M	Metal bowl	●	●	●
	MG	Metal bowl with gauge	●	●	●
	MG2	Metal bowl for 2 ℓ	●	●	●
	MG8	Metal bowl for 8 ℓ	●	●	●
	MG20	Metal bowl for 20 ℓ	●	●	●

[Example of model No.]

3003E-6C-CZ

Model: Lubricator/econo-mist

A Model No.: Large

B Port size: $Rc\ ^{3}/_{4}$

C Option: Manual cock, nylon bowl

⚠ Precautions for model No. selection

*1: If port size NPT thread is required, do not indicate nominal size C. (Example) 3003E-6

*2: Quart bowl for 2 ℓ to 20 ℓ is a made-to-order product. Combination with a bracket is not possible.

*3: This product cannot be used for a constant flow rate (minimal differential pressure) of an air motor, etc.

*4: The observation dome material is polyamide resin (nylon) even when a metal bowl is selected.

Internal structure and parts list

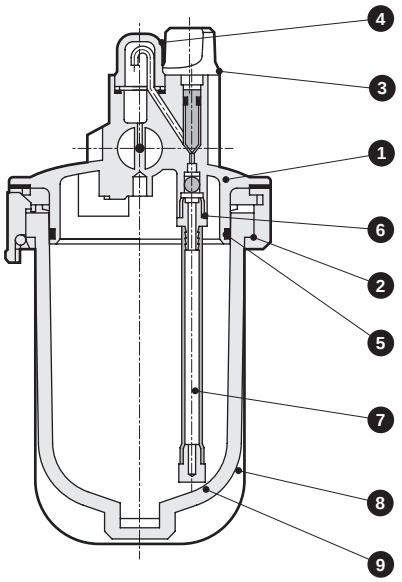

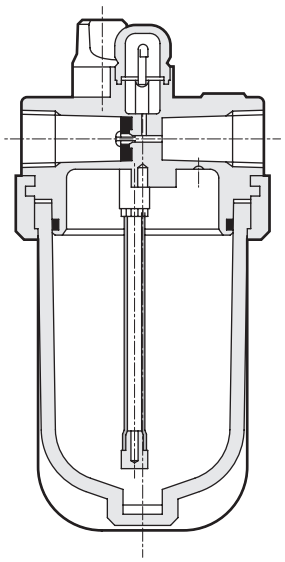

No.	Part name	Material		
		3003E	3004E	3005E
1	Body	Zinc alloy die-casting		
2	Clamp ring	Zinc alloy die-casting		
3	Filling plug	Polyacetal resin	Copper alloy	
4	Observation dome	Polycarbonate resin		
5	O-ring	Special nitrile rubber		
6	Adaptor	Copper alloy		
7	Siphon tube assembly	Polyamide resin, polypropylene		
8	Bowl guard	Steel		
9	Bowl	Polycarbonate resin		

Functions

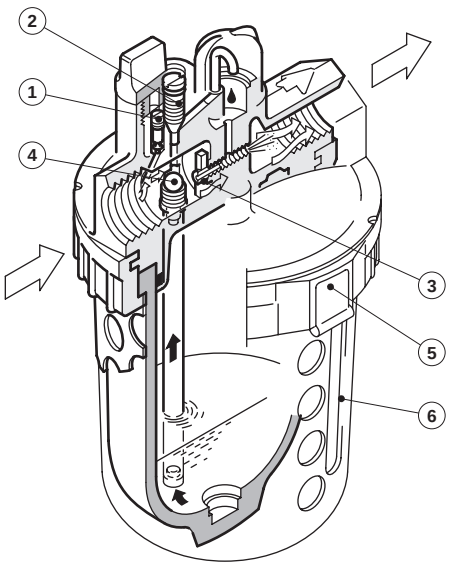

(1) Pressure valve: Compressed air is supplied in a bowl. If filling plug is loosened, the pressure valve is closed to allow re-filling lubricant without stopping the pneumatic circuit.
* Caution: Loosen the filling plug first and remove the plug after the pressure in the bowl is released. Then refill the lubricant.
(2) Oil rate adjustment needle: Adjust oil rate supplied to compressed air. Needle with a special shape is used to adjust the oil rate accurately. One drop of oil is approx. 0.02 cm^3.
(3) Flow guide: Constant proportion of compressed air vs. oil rate is maintained in both large and small flow rates to supply oil fog to pneumatic components.
(4) Check valve: Lubricant in the bowl flows into the drip tube passing though the siphon tube. Check valve inside prevents oil from flowing backward.
(5) Clamp ring: Push-in clamp ring is used to achieve easy bowl washing and lubrication from bowl.
(6) Bowl guard: Lubricant volume can be checked through the oval hole, enabling maintenance to be performed easily. Even if the bowl breaks, its shards will not scatter.

Dimensions

- 3003E
- 3004E
- 3005E

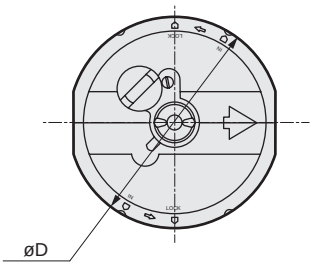

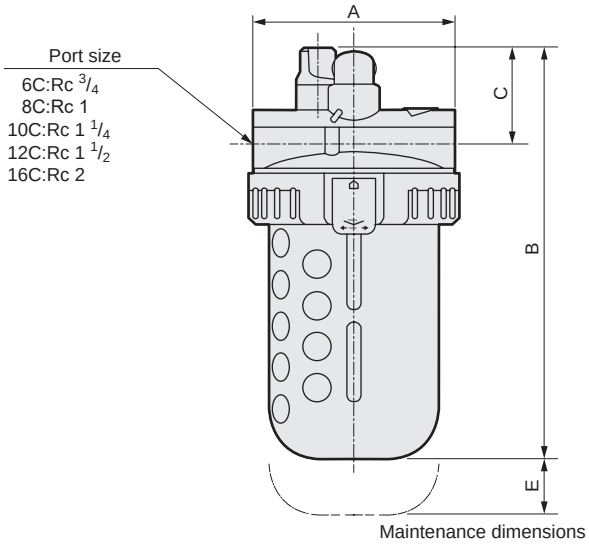

Model No.			3003E	3004E	3005E
A			118	140	140
B	Combination option	Blank	259	291	314
		C	289	322	339
		M/MG	261	294	310
		CM/CMG	275	308	324.5
C			50	58	67
D			118	114	127
E			200	200	200

- Pipe bracket: 6132
  · Material: Steel
  Zinc plated

Bracket - Pipe bracket thickness 4.5 mm

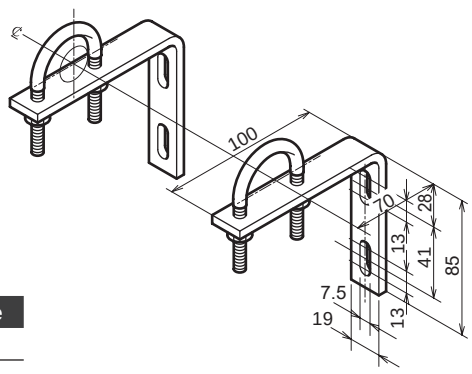

Model No.	Port size
6132-6C	3/4B
6132-8C	1B

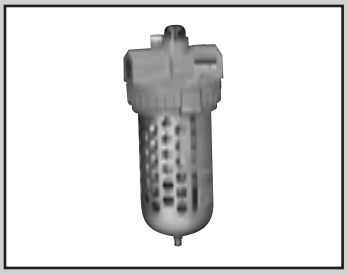

3003E Series

Lubricator/auto-fill

Only installing oil tank enables automatic lubrication to multiple lubricators.

● Port size: Rc $^1/_4$ to Rc1

JIS symbol



RoHS CAD

Specifications

Item		3003E-6C/8C-V
Working fluid		Compressed air
Max. working pressure	MPa	1.0 (≈150 psi, 10 bar)
Proof pressure	MPa	1.5 (≈220 psi, 15 bar)
Ambient / fluid temperatures	°C	5 (41°F) to 65 (149°F)
Lubrication pressure	MPa	Working pressure plus 0.035 (≈5.1 psi, 0.35 bar) to 0.35 (≈51 psi, 3.5 bar)
Oil used		Turbine oil Class 1, ISO VG32 (spindle oil cannot be used)
Port size	Rc	$^3/_4$, 1
Weight	kg	2.5
Bowl guard		Standard equipment

Option weight

* Add to the weight of the standard accessories.

Unit: kg

	Bowl material		
Code	Z	M	MG
3003E-V	-0.025	0	0.17

How to order

3003E – **6C** – **V** **Z**

- 3003E: Model No.
- 6C: Ⓐ Port size *1
- V: Auto-fill
- Z: Ⓑ Option

Code	Description
Ⓐ Port size	
6C	Rc$^3/_4$
8C	Rc1
Ⓑ Option	
Bowl material **Blank**	Polycarbonate
Z	Nylon bowl
M	Metal bowl
MG	Metal bowl with gauge

⚠ Precautions for model No. selection

*1: If port size NPT thread is required, do not indicate nominal size C.
(Example) 3003E-6-V

[Example of model No.]

3003E-6C-Z

Model: Lubricator/auto-fill

Ⓐ Port size: Rc $^3/_4$

Ⓑ Option: Nylon bowl

Functions

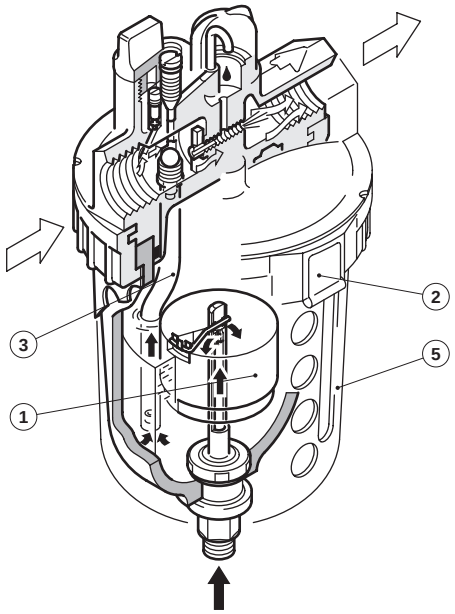

(1) Float: The float using rubber foam detects a decrease of lubricant by its buoyancy and opens the orifice seat by the level arm to supply lubricant.
(2) Clamp ring: A push-in clamp ring is used to achieve easy washing, maintenance and inspection of bowl.
(3) Siphon tube: Uniquely shaped siphon tube is designed not to make contact with the float. Re-assemble the tube not to contact to the float after washing.
(4) Stop valve: Always use the stop valve for bowl washing or maintenance to avoid jetting lubricant. No stop valve is installed to the product.
(5) Bowl guard: Even if the bowl breaks, operator safety will be maintained. Drainage remaining and the internal state can be checked through the oval hole.

Dimensions CAD

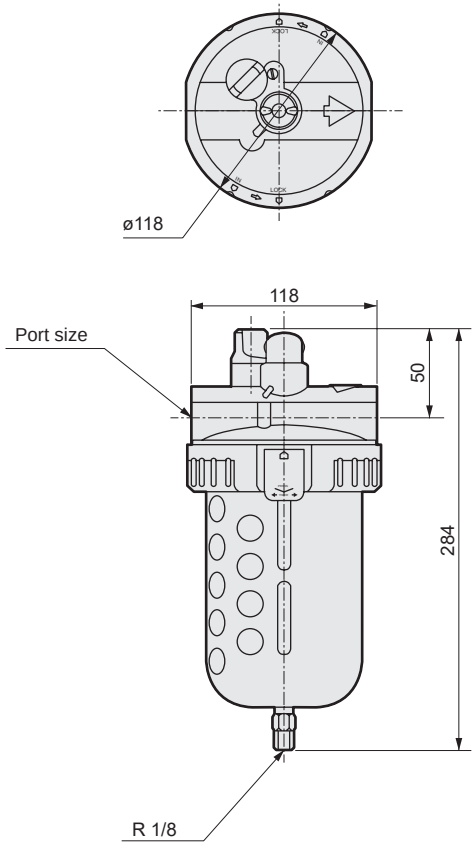

Standard piping

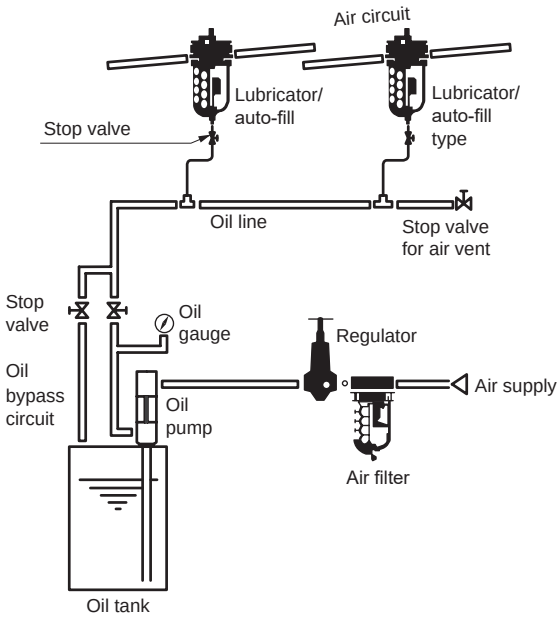

(1) Always use zinc plating steel tube for an oil line.
(2) Install an oil line as near as possible to the auto-fill lubricator.
(3) Connect auto-fill lubricator with flexible tube (1m or below).
(4) Always install a stop valve for the air vent to the end of the oil line.
(5) Oil supply pressure to auto-fill lubricator is to be 0.035 to 0.35 MPa higher than air pressure of lubricator.

For air filter

Many options are available for the CKD air filter.
When selecting the model No. of the air filter, carefully consider the environment in which the air filter is to be used.

If an option is required, order with an option code added at the end of the model No.
(Example) If a metal bowl is installed onto the 1138-6C, 1138-6C-M shall be specified.

Bowl options table

Compatible model No.		1138 1126 1226 1226J	1238
Compatible model		1138	1238
Option code	Blank	○	○
	E	○	○
	F	○ *1	
	F1	○	○
	Z	○	
	EZ	○	
	FZ	○ *1	
	F1Z	○	
	M	○	○
	FM	○ *1	
	F1M	○	○
	MG	○	○
	FMG	○ *1	
	F1MG	○	○

How to order bowl assembly

(A set of bowl assembly and O-ring for sealing)

1138 – BOWL – FM

Ⓐ Model No.	Ⓑ Option code			
	Drain discharge		Bowl material	
1138	**Blank**	Manual drain cock	**Blank**	Polycarbonate resin
1238	**E**	Flexible drain	**Z**	Transparent nylon resin
	F	NO auto-drain with manual cock (exhaust when not pressurized)	**M**	Metal bowl
	F1	NC auto-drain with manual cock (no exhaust when not pressurized)	**MG**	Metal bowl with side gauge

Select in order of the drainage, size and bowl material.

*1: Do not apply F (NO auto-drain) to micro alescer.

*2: Refer to page 480 for the auto-drain usage conditions

Other bowl assembly model No. table

Bowl material	Compatible model No.	
	1326/5100	A1338
Polycarbonate resin	5100-BOWL	A1338-BOWL
Nylon resin	5100-BOWL-Z	——
Metal bowl	5100-BOWL-M	A1338-BOWL-M
Metal bowl with side gauge	5100-BOWL-MG	A1338-BOWL-MG

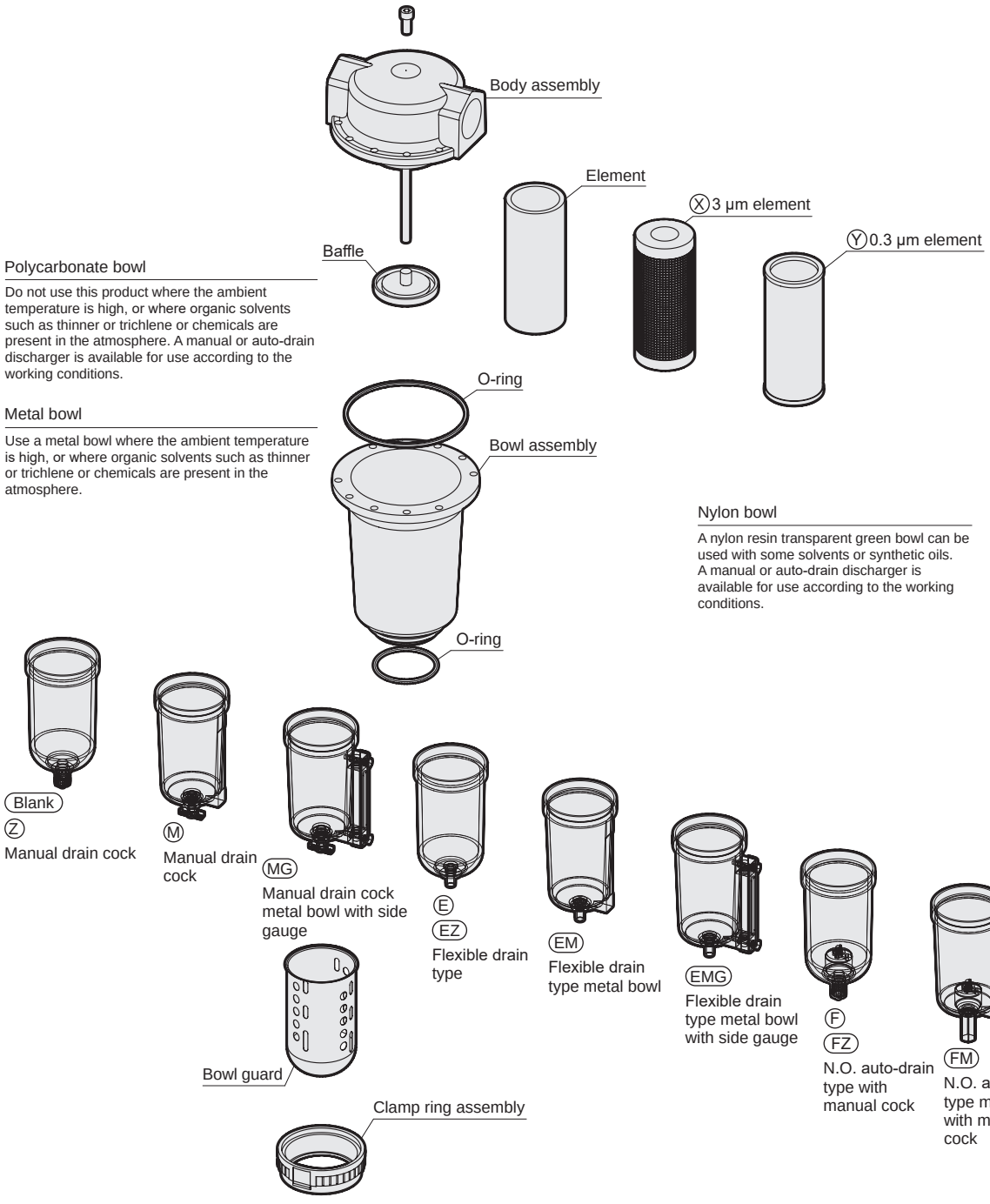

Polycarbonate bowl

Do not use this product where the ambient temperature is high, or where organic solvents such as thinner or trichlene or chemicals are present in the atmosphere. A manual or auto-drain discharger is available for use according to the working conditions.

Metal bowl

Use a metal bowl where the ambient temperature is high, or where organic solvents such as thinner or trichlene or chemicals are present in the atmosphere.

Nylon bowl

A nylon resin transparent green bowl can be used with some solvents or synthetic oils. A manual or auto-drain discharger is available for use according to the working conditions.

Air filter with 3 µm element

Max. flow rate table

Atmospheric pressure conversion value for primary pressure 0.7 MPa and pressure drop 0.034 MPa

Model No.	Port size	Max. flow rate (ℓ/min ANR)
1138-6C-EX	Rc$^{3}/_{4}$	4,800
1138-8C-EX	Rc1	6,400
1126-10C-EX	Rc1 $^{1}/_{4}$	13,000
1126-12C-EX	Rc1 $^{1}/_{2}$	13,000
1126-16C-EX	Rc2	13,000

Regulator

Many options are available for CKD regulator.
When selecting the regulator model No., select the product according to the working conditions of the regulator.

If an option is required, order with an option code added at the end of the model No.
(Example) If a plastic knob is installed onto the 2215-8C, 2215-8C-K shall be specified.

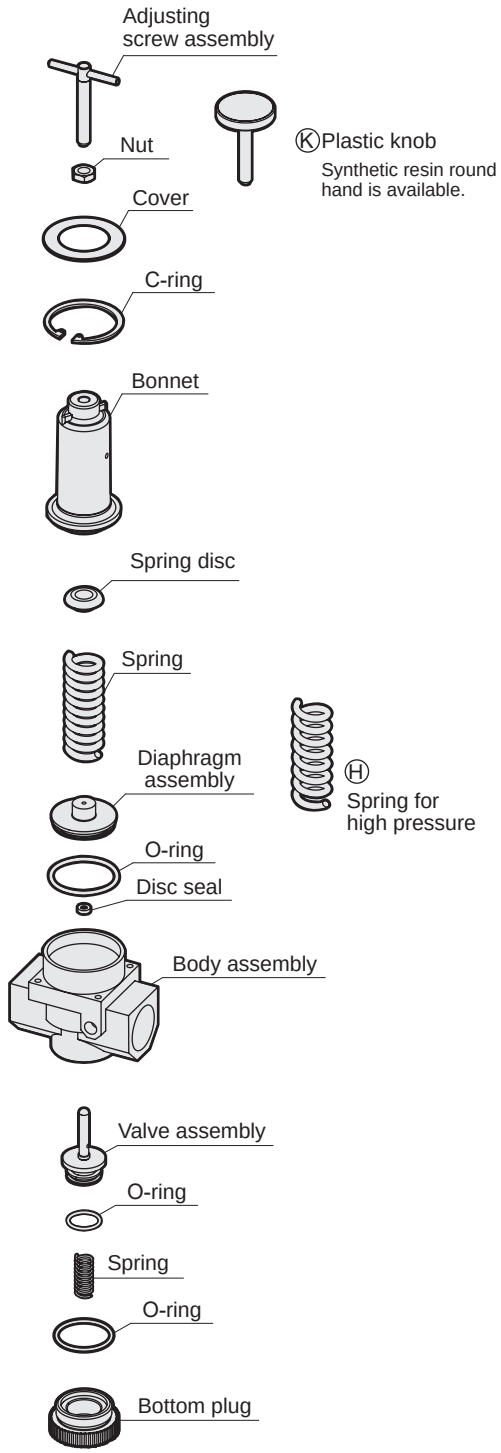

Specifications

Model	Model No.	Pressure adjusting range
Regulator for high pressure	2215-6/8/10C-H	0.07 to 1.23 MPa

Attached pressure gauge

Model	Attached pressure gauge	
	G	LG
2215 2216 2415 2302 2303 2304	G59D-8-P10	G59D-8-P04
2215-H 2216-H	G59D-8-P20	

For lubricator

Many options are available for CKD lubricator. When selecting the model No. of lubricator, carefully consider the type of lubricant and working environment.

If an option is required, order with an option code added at the end of the model No. (Example) If a metal bowl is installed onto the 3003E-6C, 3003E-6C-M shall be specified.

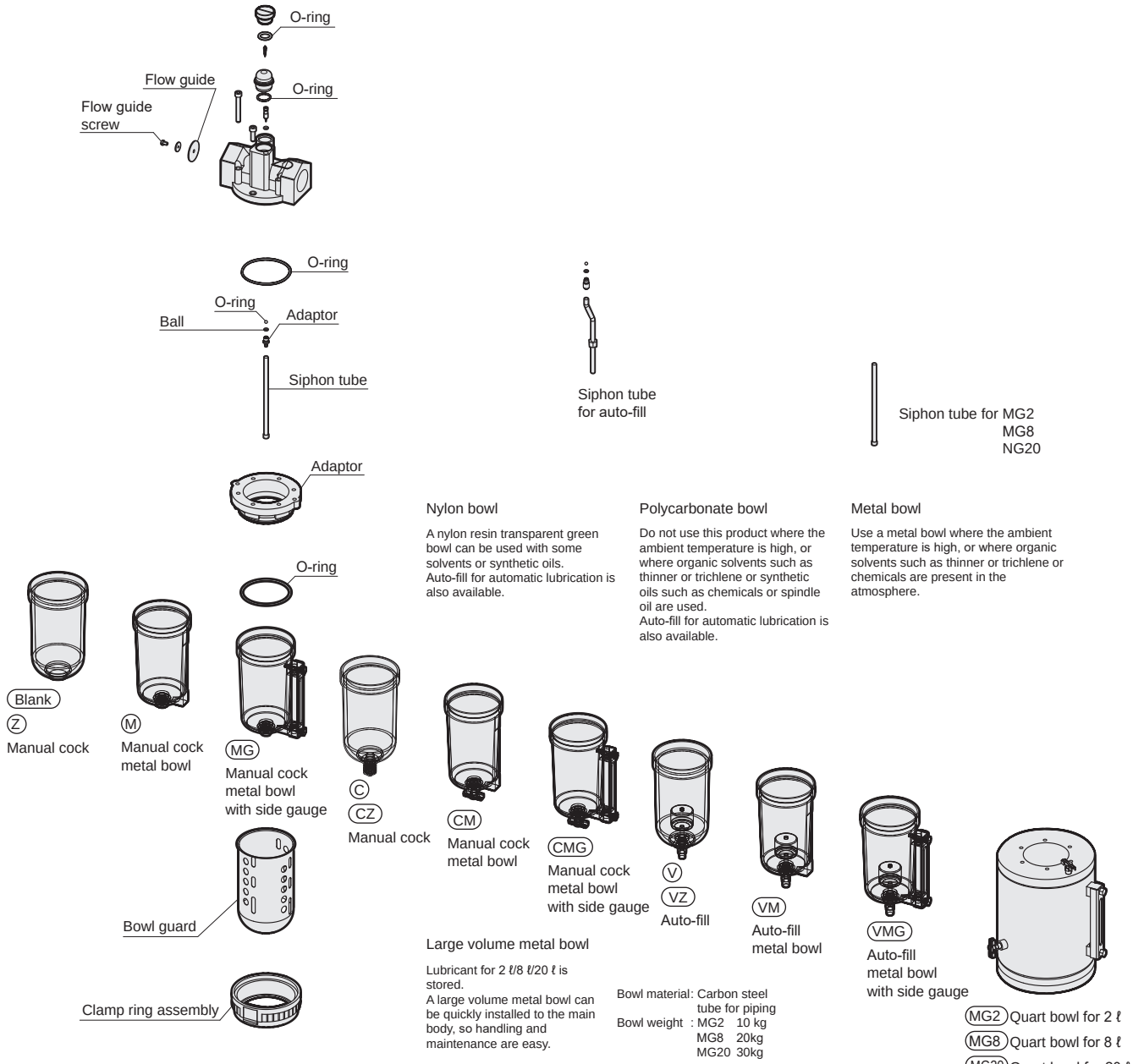

Nylon bowl

A nylon resin transparent green bowl can be used with some solvents or synthetic oils.
Auto-fill for automatic lubrication is also available.

Polycarbonate bowl

Do not use this product where the ambient temperature is high, or where organic solvents such as thinner or trichlene or synthetic oils such as chemicals or spindle oil are used.
Auto-fill for automatic lubrication is also available.

Metal bowl

Use a metal bowl where the ambient temperature is high, or where organic solvents such as thinner or trichlene or chemicals are present in the atmosphere.

Large volume metal bowl

Lubricant for 2 ℓ/8 ℓ/20 ℓ is stored.
A large volume metal bowl can be quickly installed to the main body, so handling and maintenance are easy.

Bowl material: Carbon steel tube for piping
Bowl weight : MG2 10 kg
MG8 20kg
MG20 30kg

Bowl assembly and model No. table (set of bowl assembly and O-ring for sealing)

Compatible model	Polycarbonate resin bowl			Transparent nylon resin bowl			Metal bowl		
	Blank	Manual cock	Auto-fill	Blank	Manual cock	Auto-fill	Blank	Manual cock	Auto-fill
A3019	A3019-BOWL	A1019-BOWL	—	A3019-BOWL-Z	A1019-BOWL-Z	—	—	A1019-BOWL-M	—
3003E/3503E	3003E-BOWL	1138-BOWL	3003E-BOWL-V	3003E-BOWL-Z	1138-BOWL-Z	3003E-BOWL-VZ	3003E-BOWL-M	1138-BOWL-M	3003E-BOWL-VM

Compatible model	Metal bowl with side gauge					
	Blank	Manual cock	Auto-fill	2ℓ	8ℓ	20ℓ
A3019	—	—	—	—	—	—
3003E/3503E	3003E-BOWL-MG	1138-BOWL-MG	3003E-BOWL-VMG	3003E-BOWL-MG2	3003E-BOWL-MG8	3003E-BOWL-MG20
				3004E-BOWL-MG2	3004E-BOWL-MG8	3004E-BOWL-MG20
				3005E-BOWL-MG2	3005E-BOWL-MG8	3005E-BOWL-MG20

*1: The quart bowl number for 2 ℓ to 20 ℓ contains an adaptor, screws, a gasket and a siphon tube assembly, etc., for installation.
*2: Quart bowl for 2 ℓ to 20 ℓ is a made-to-order product.
*3: Indicate "blank" for a bowl without cock. Blanking plug assembly applies to a metal bowl without cock "M".
*4: Siphon tube assembly is attached for MG2/MG8/MG20.

Pneumatic components (F.R.L. unit (large bore size))

Safety Precautions

Be sure to read this section before use.
Refer to Intro Page 63 for precautions for general pneumatic components.

Product-specific cautions: F.R.L. unit (large bore size regulator, filter/regulator)

Design/selection

1. Common

⚠WARNING

■ The air filter, lubricator plastic bowl, lubricator drip window and pressure gauge lens are all made of polycarbonates. They cannot be used in environments containing synthetic oil, organic solvents, chemicals, coolant, screw locking agent, leak detection solutions, or hot water, etc., or where these substances may come in contact with the product.
Refer to page 485 for details on plastic bowl chemical resistance.

■ Piping load torque
Avoid applying piping load or torque to the body or pipes.

	Rc1/8,Rc1/4	Rc3/8,Rc1/2,Rc3/4	Rc1 or higher
Max. torque N·m	15	50	100

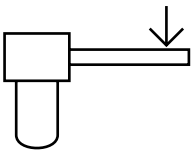

⚠CAUTION

■ High moisture levels
Install the air dryer and drain separator before the air filter. If there is a lot of moisture from the compressor, hot and highly humid air could shorten the device's life or result in corrosion.

■ Ultra dry air
Rubber parts for the regulator could deteriorate quickly, so use of a fluoro rubber valve assembly is recommended. Contact CKD when required.

■ Water-lubricated compressor circuit
Take measures to prevent chlorine-based substances from entering the compressed air.

■ Use the auto-drain under the working conditions below. Failure to observe this could result in operation faults.
"F" NO auto-drain (exhaust when not pressurized)
- A compatible compressor must be used at 0.75 kW and over (discharge flow rate 0.09 m^3/min. [ANR]). Air is purged with initial drainage until pressure reaches 0.1 MPa just after compressor operates.
- Set the working pressure to 0.1 MPa or more.

"F1" NC auto-drain (no exhaust when not pressurized)
- A compressor with a capacity of 0.75 kw or less can also be used.
- Set the working pressure to 0.15 MPa or more.

Piston drain "D"
- Set the working pressure to 0.1 MPa or more.
- Do not use this device on equipment that experiences impacts.
- Automatic discharge used for intermittent flow. Drainage is not discharged under working conditions where air flows constantly.

2. Filter

⚠CAUTION

■ Do not select using the port size.

■ Use a pre-filter before the micro alescer filter/ micro-naught. Use a filter (5 μm) or submicron filter as the pre-filter.

■ Use a micro-naught micro alescer before the odor naught micro alescer air filter.

3. Regulator, F.R. unit

⚠WARNING

■ Output pressure exceeding the regulator's set pressure could result in damage or faulty operation of the secondary side devices. Be sure to install a safety device.

■ The regulator cannot process residual pressure (release secondary pressure) when the primary pressure is released.
Use a regulator with a check valve when residual pressure must be processed.

■ When using the regulator for secondary side sealed circuits or balance circuits
Contact CKD regarding these applications.

⚠ CAUTION

■ Pulsation may occur depending on the working conditions or piping conditions.
Lower the primary pressure if pulsation occurs. Select the proper size as pulsation can occur easily if the flow rate is extremely small in respect to the max. flow rate.

■ The setting range for the regulator's secondary-side pressure should be within 85% of that of the primary side.

■ The dial regulator cannot be used when the secondary pressure differs at high frequency or back pressure is applied on the secondary side with a balancer, etc.

■ After setting pressure, do not release primary pressure or depressurize.

■ When using regulators in parallel as below, do not use the OUT side as a closed circuit. If a closed circuit is required, install a check valve on the OUT side of each regulator.

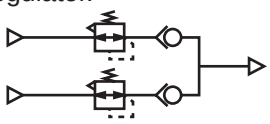

4. Lubricator

⚠ WARNING

■ Do not use as lubrication for air motor or bearings. Lubrication may not be possible when used very frequently, such as in a press machine.

⚠ CAUTION

■ If the working air quantity is low for the lubricator, oil may not drip.
Check the min. air quantity required for dripping oil.

■ The Econo-mist has a check valve that allows the oil to be supplied in the pressurized state without stopping primary pressure.
Check that the bowl is not pressurized before supplying oil.
Check that the oil level in the bowl is between the upper and lower limits.

Mounting, installation and adjustment

1. Common

⚠ CAUTION

■ Using the F.R.L. correctly
- Avoid installing this product where it is subject to direct ultraviolet.
- Set the regulator pressure setting upward. After setting the pressure, lock the handle. Check primary pressure carefully before setting pressure.
- Check the arrow indicating the air inlet before connecting. A reverse connection could result in improper operation.
- Install the air filter and lubricator vertically with the bowl facing downward. Drainage may be defective or drip check may become impossible.
- Use of the auto-drain where vibration is present could cause faults and malfunctions.

■ Drain piping of the auto-drain should be piped under the following conditions.
Otherwise, malfunctions may result.
Use an inner diameter of ø5.7 or more and piping of 5 m or more for the drain discharge section. Do not use vertical piping.
Do not route it vertically. Pipe so that no lateral load is applied on the bowl.

■ Piping screw-in torque
Make sure that excessive torque is not applied on the body and piping when piping.

	Rc1/8,Rc1/4	Rc3/8,Rc1/2	Rc3/4 or higher
Max. torque N·m	30	75	100

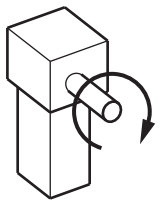

■ Plastic bowl drain piping
- The drain piping for the plastic bowl with manual drain cock has a barbed nipple and can be directly installed. However, confirm that the drain cock is closed before inserting the tube. Do not route it vertically. Pipe so that no lateral load is applied on the bowl.
The max. tightening torque of the drain cock is 0.5 N·m.

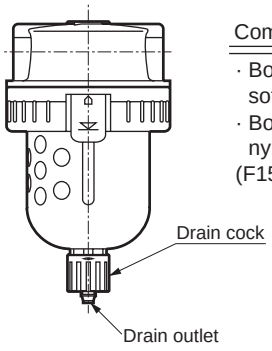

Compatible tube
· Bore size ø5 soft vinyl tube
· Bore size ø5.7 to ø6 nylon tube
(F1508)

Mounting, installation and adjustment

⚠CAUTION

■ Drain piping of metal bowl with auto-drain

- Fix the hex side of the cock before screwing the fitting, etc., into the Rc 1/4 female thread. When using the metal bowl with auto-drain, if the drain is piped with a tightening fitting, manual operation is not possible. Do not route it vertically. Pipe so that no lateral load is applied on the bowl.

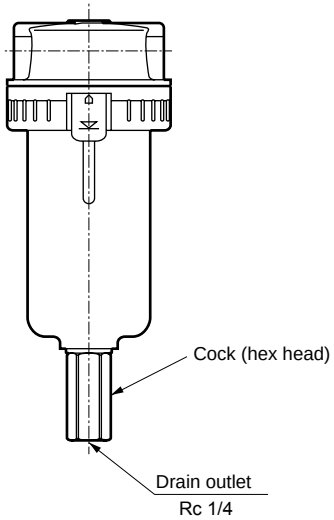

2. F.R. unit

⚠CAUTION

■ Turn the pressure adjustment handle clockwise to increase the secondary pressure and counterclockwise to lower the pressure.

■ Set the pressure while checking primary pressure.

■ If the pressure cannot be adjusted, check the valve assembly for the adherence of foreign matter and check the O-ring for damage, etc.

3. Filter

⚠CAUTION

■ When piping, remove coolant and rust preventing agent, etc. Failure to observe will obstruct initial performance of the micro naught micro alescer filter and shorten its life. Coolant and rust preventing agent on the inside of pipes enters compressed air and adversely affects expensive pneumatic components or devices.

4. Regulator, F.R. unit

⚠CAUTION

■ When using the dial air regulator, turn the adjusting knob clockwise to increase the secondary pressure and counterclockwise to lower the pressure. Adjust pressure so the primary pressure is 0.1 MPa or more higher than set pressure.
Do not turn ON and OFF frequently using the air valve.

■ The set pressure changes from the initial set point due to the working environment and conditions, as well as aging of part materials. Check the pressure regularly, and reset if conditions have changed.

5. Lubricator

⚠CAUTION

■ Adjustment of the lubricator oil drip

- Turn the adjusting screw to adjust oil drip.
Check that the adjusting screw does not protrude past the body side. Failure to observe this could cause DANGER such as the adjusting screw dislocating and popping out.

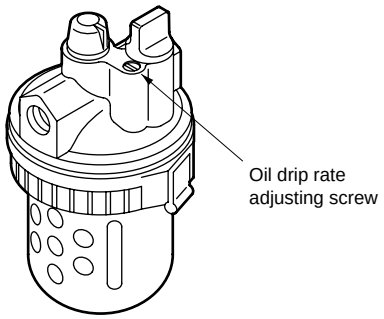

Use/maintenance

1. Common

⚠WARNING

■ Check the air filter, lubricator plastic bowl and lubricator drip window for cracks, damage and other deterioration.
Replace the bowl with a new plastic or metal one and new window if you find any damage.

■ Check the air filter, lubricator plastic bowl and lubricator drip window periodically for contamination.
- If parts are heavily contaminated or if transparency has decreased, replace with a new bowl or drip window.
- Use water and household detergent to wash parts. Rinse them out well with clean water afterward.

■ Removing bowl of filter and lubricator
Stop the compressed air supply. Release the pressure in the bowls completely and make sure that there is no residual pressure before removing the bowls.

■ Assembling parts for maintenance
- For maintenance, wash parts and assemble without entry of cutting chips or other foreign matter.

⚠CAUTION

■ Check the oil drip rate once a day.
If the oil drip is faulty, problems could occur in the unit being lubricated.

■ Drain discharger
- Note that the compressor may generate oil oxides such as tar and carbon, so use clean air.
- Release air in the bowl before checking for draining problems of the 5100. After washing the drain unit, dry it with compressed air.

■ Storage
Do not store this product in a hot, humid atmosphere or atmospheric conditions outside of the specified range for a prolonged period of time. Resin or rubber parts could deteriorate and the resin bowl could become discolored. Contact CKD when storing products exceeding specifications.

2. Filter

⚠WARNING

■ Drain so that air filter moisture does not accumulate beyond the upper limit.
Components could malfunction if moisture flows into the secondary side.

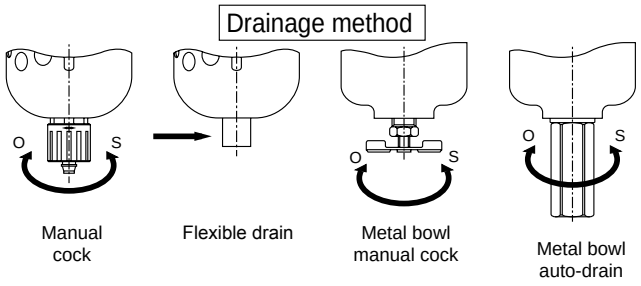

- Drainage starts when the cock is turned in the O direction and the discharge stops when the cock is turned in the S direction.
- When auto-drain is available, drainage is discharged automatically when it accumulates. Drainage can also be discharged manually.
- When using the flexible drain, the drainage can be discharged by pressing in the direction of the arrow.

Use/maintenance

⚠CAUTION

■ Filter

- Use the differential pressure gauge GA400-8-P02 to measure pressure drop. Measure the pressure drop accurately.

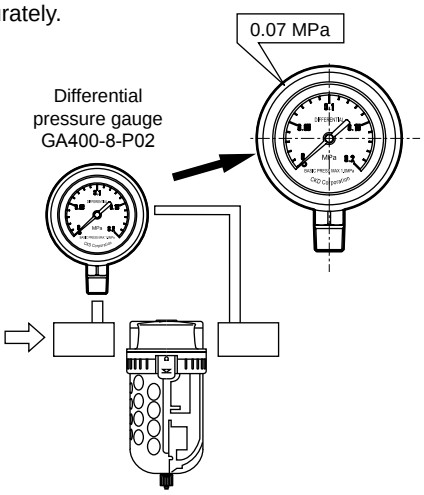

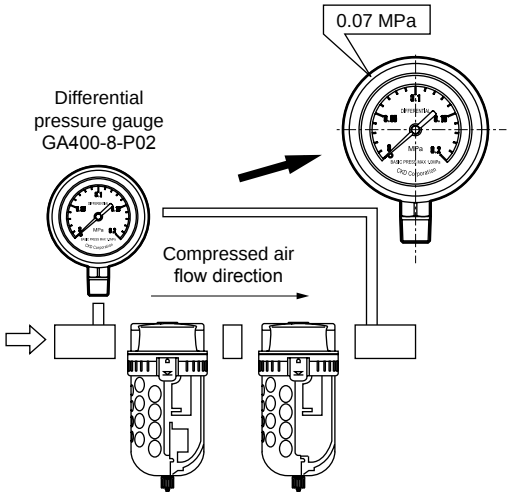

- The odor naught micro alescer air filter adsorbs odors with activated carbon, so life cannot be measured. When the micro naught micro alescer's pressure drops to 0.07 MPa, replace the mantle for the micro naught micro alescer at the same time.

■ Submicron 0.3 μm element
This filter cannot be washed and reused. When the pressure drops to 0.07 MPa, replace the Y element with a new one.

■ The micro alescer (oil removal filter) mantle (element) service life is reached when the pressure drops to 0.07 MPa. Replace the mantle with a new one at the end of its life. (Do not touch the urethane foam layer when replacing the mantle.)

3. Regulator

⚠CAUTION

■ The set pressure changes from the initial set point due to the working environment and conditions, as well as aging of part materials. Check the pressure regularly and reset if conditions have changed.

■ For the remote control dial regulator, attach a pressure gauge to the body's gauge port and adjust the pilot pressure.

4. Lubricator

⚠WARNING

■ Use Class 1 turbine oil (no additives) ISO VG32 for the lubricator.
Other oils could cause breakage or improper operation.

■ Removing filling plug of lubricator
To prevent the filling plug from popping out, loosen the filling plug by one turn and then completely depressurize the bowl before removing the filling plug. Wipe away any dirt around the filling plug that could scatter.

■ Periodically replenish oil in the lubricator bowl so that it does not drop below the lower limit.

Chemical resistance of plastic

⚠ WARNING

■ The chemical resistance of plastic parts is shown below.

■ Avoid using products in an atmosphere where chemicals are contained in compressed air or atmosphere, or where they could adhere to parts.

■ Using in the above state could lead to bowl damage and accidents.

■ Avoid use with these types of chemicals or in an atmosphere containing these chemicals.

■ A metal bowl is available if these chemicals must be used.

Chemical resistance of plastic bowl/body

Use a metal bowl in an atmosphere containing the following chemicals.
Check whether the testing solutions, sealants and adhesives contain the following chemicals.

Types of chemicals	Categories of chemicals	Main products of chemicals	General applications	Polycarbonate bowl	Nylon bowl	Nylon body
Inorganic chemicals	Acids	Hydrochloric acid, sulfuric acid, hydrofluoric acid, phosphoric acid, chromic acid, etc.	Acid washing of metals, acidic degreasing solution, coating treatment solution, etc.	×	×	×
	Alkalines	Alkalis such as caustic soda, caustic potash, calcium hydroxide, aqueous ammonia, sodium carbonate	Alkaline degreasing solution for metals Soluble coolant, leakage detection agent	×	○	○
	Inorganic salts	Sodium sulfide, sodium nitrate, potassium bichromate, sulfate of soda, etc.		×	○	○
Organic chemicals	Aromatic hydrocarbons	Benzene, toluene, xylene, ethyl benzene, styrene, etc.	Contained in paint thinner (benzene, toluene and xylene)	×	×	×
	Chlorinated aliphatic hydrocarbons	Methyl chloride, ethylene chloride, methylene chloride, acetylene chloride, chloroform, trichlene, perchlene, carbon tetrachloride	Organic solvent-based washing solution for metals (trichlene, perchlene, carbon tetrachloride)	×	○	○
	Chlorinated aromatic hydrocarbons	Chlorobenzene, dichlorobenzene, benzene hexachloride (B/H/C), etc.	Agricultural chemicals	×	○	○
	Petroleum components	Solvent naphtha, gasoline, kerosene		×	○	○
	Alcohols	Methyl alcohol, ethyl alcohol, cyclohexanol, benzyl alcohol	Used as antifreezing agent Leakage detection agent	×	×	×
	Phenol	Carbolic acid, cresol, naphthol, etc.	Disinfectant solution	×	×	×
	Ethers	Methyl ether, methyl ethyl ether, ethyl ether	Additive of brake oil	×	○	○
	Ketones	Acetone, methyl ethyl ketone, cyclohexanone, acetophenone, etc.		×	×	×
	Carboxylic acids	Formic acid, acetic acid, butyl acid, acrylic acid, oxalic acid, phthalic acid, etc.	Dyes/oxalic acid for aluminum processing, phthalic acid for paint base and leakage detection agents	×	×	×
	Esters	Dimethyl phthalate (DMP), diethyl phthalate (DEP), dibutyl phthalate (DBP), dioctyl phthalate (DOP)	Lubricant, synthetic coolant, rust preventing agent additive plasticizer for synthetic resin	×	○	○
	Oxyacids	Glycol acid, lactic acid, malic acid, citric acid, tartaric acid		×	×	×
	Nitro compounds	Nitromethane, nitroethane, nitroethylene, nitrobenzene, etc.		×	○	○
	Amines	Methylamine, dimethylamine, ethylamine, aniline, acetanilide, etc.	Additive of brake oil	×	×	×
	Nitriles	Acetonitrile, acrylonitrile, benzonitrile, acetoisonitrile, etc.	Raw material for nitrile rubber	×	○	○

○: Resistant, ×: Non-resistant (plastic will become damaged.)

Precision regulator

■ F.R.L units

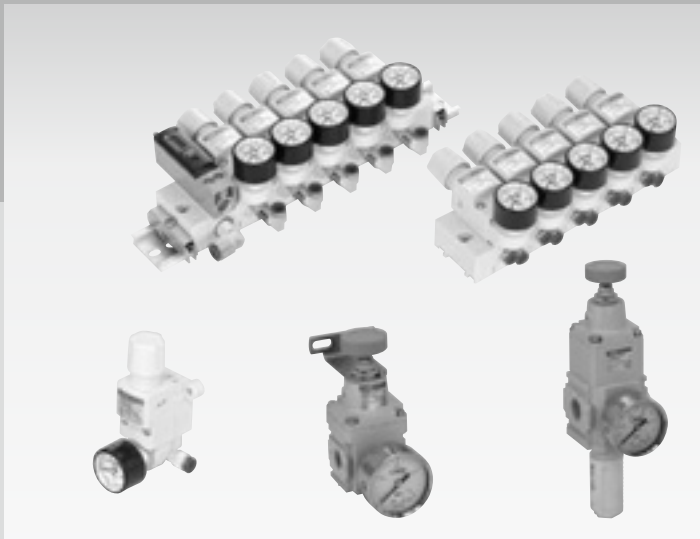

CONTENTS

Compact direct acting precision regulator	
Product introduction	488
● Single unit (RJB500)	490
● Block manifold (MNRJB500)	492
Block configuration	498
Technical data	503
Manifold specifications	504
⚠Safety precautions	506
Precision regulator (modular design)	
Product introduction	510, 516
● RPE1000	512
● RP1000	518
● RP2000	522
Applications	526
⚠Safety precautions	514, 527

Compact body with precision control from **0.01 MPa**.

This miniature direct acting precision regulator realizes a minimum setting pressure of 0.01 MPa and sensitivity of 0.001 MPa with compact 25 mm spacing.

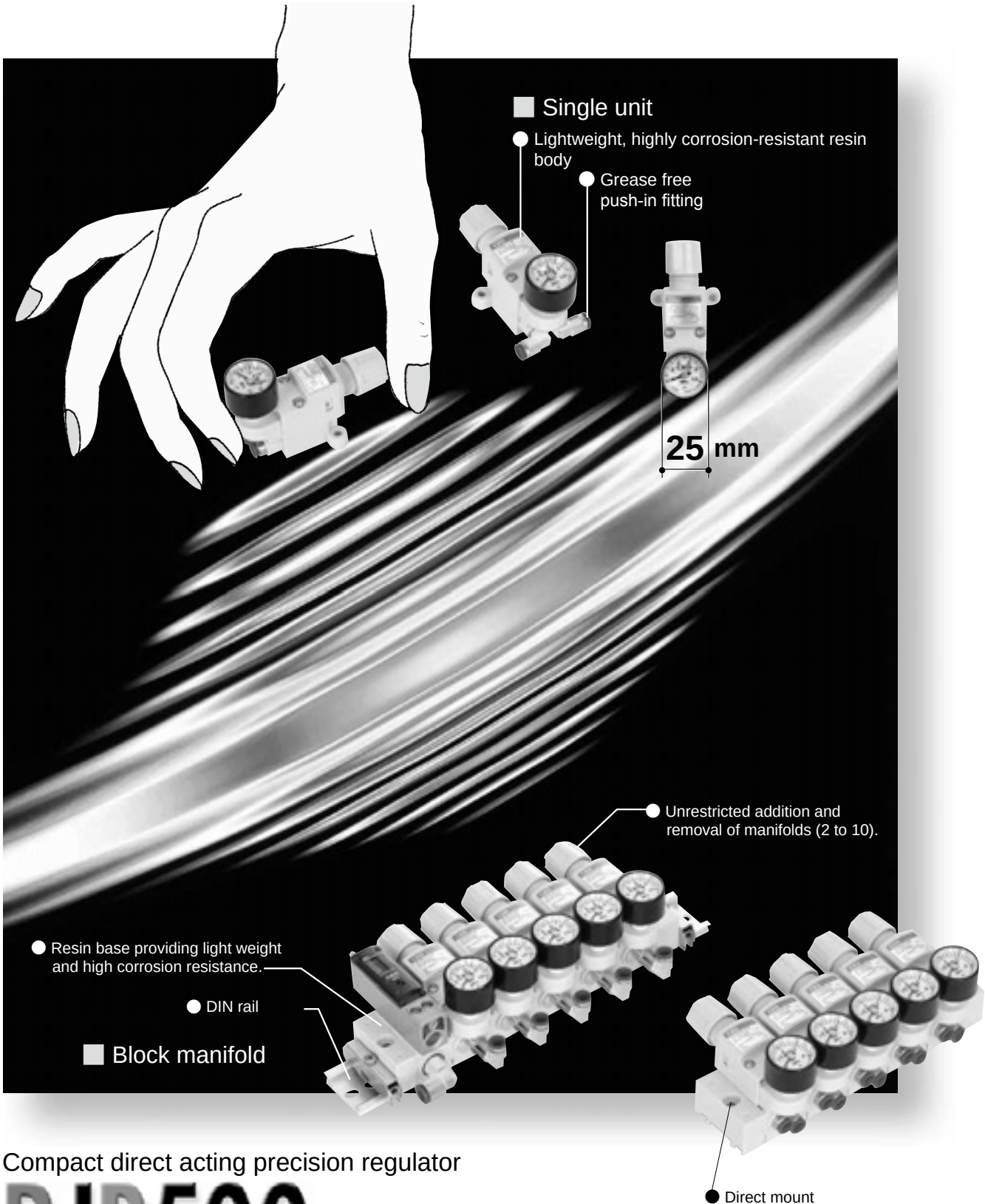

Compact direct acting precision regulator

RJB500 Series

Ideal for semiconductor manufacturing post processes, IT applications, and compact assembly, etc., requiring space saving, precision, and grease-free products.

High-sensitivity control in low pressure ranges

Pressure can be set from 0.01 to 0.2 MPa for low pressure and from 0.02 to 0.5 MPa for standard pressures. Sensitivity is 0.001 MPa for both applications. Highly sensitive adjustment is realized in low-pressure ranges with a special diaphragm.

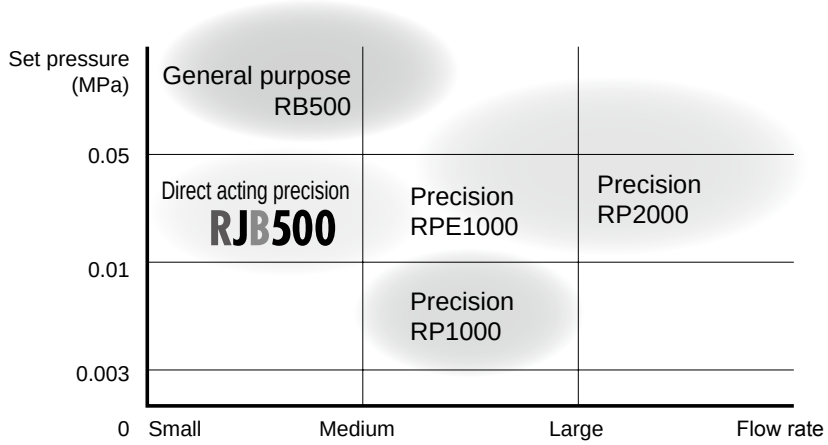

Grease-free specifications

Standard grease-free specifications are used for fluid passage areas and push-in fittings. Compatible with applications susceptible to grease.

Energy saving mechanism

A variable constant-bleed mechanism is used.
Min. air consumption can be set to match the working pressure.

Energy is conserved with a variable constant-bleed mechanism

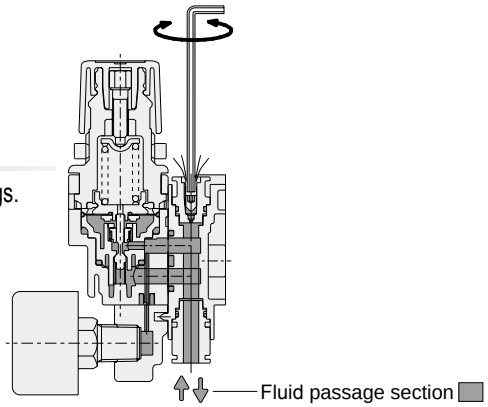

Compact

Push-in fitting, mounting bracket, and pressure gauge integrated.
Compact and space saving.

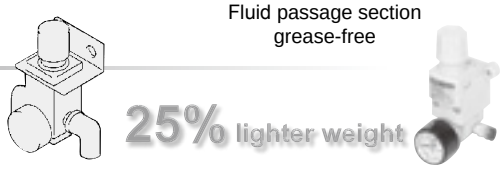

Increased workability

Push-in fittings are standard. The piping direction can be selected from straight or elbow.

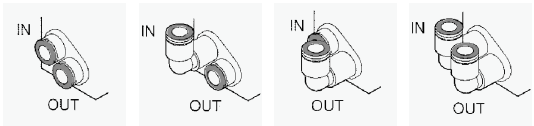

Applications

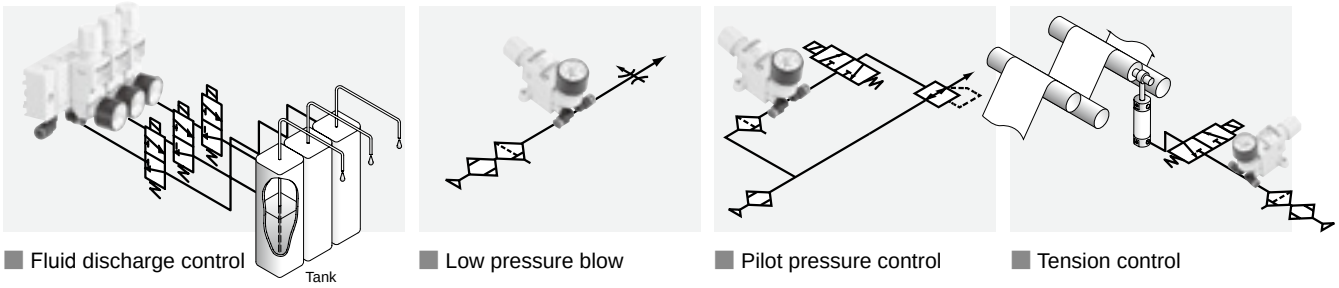

■ Fluid discharge control ■ Low pressure blow ■ Pilot pressure control ■ Tension control

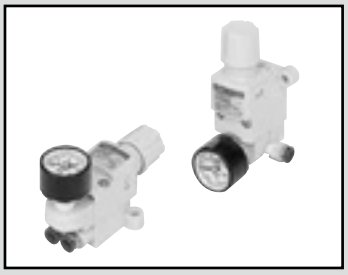

Compact direct acting precision regulator

RJB500 Series

Grease-free specification/compact/space saving

● Port size: Push-in fitting ø4, ø6

JIS symbol 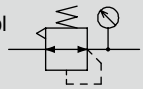

RoHS CAD

Specifications

1 MPa = 10 bar

Item		RJB500
Working fluid		Compressed air
Max. working pressure MPa		1.0 (≈150 psi, 10 bar)
Proof pressure MPa		1.5 (≈220 psi, 15 bar)
Ambient / fluid temperatures ℃		5 (41°F) to 60 (140°F)
Set pressure MPa		0.02 (≈2.9 psi) to 0.5 (≈73 psi) (0.01 (≈1.5 psi) to 0.2 (≈29 psi)) (*1)
Sensitivity MPa		0.001 (≈0.15 psi) {Lock sensitivity 0.004 (≈0.58 psi)} (*2)
Air consumption ℓ/min		1.5 (*3)
Port size	IN/OUT	Push-in fitting: ø4/ø6
	GAUGE	Rc 1/8
Weight g		90 (No pressure gauge: 65)

*1: Values in parentheses are for low pressure.
*2: Pressure sensitivity setting for the pressure adjustment knob block's minimum spacing.
*3: Value for secondary side setting pressure 0.1 MPa.

Flow characteristics

● RJB500-**C4

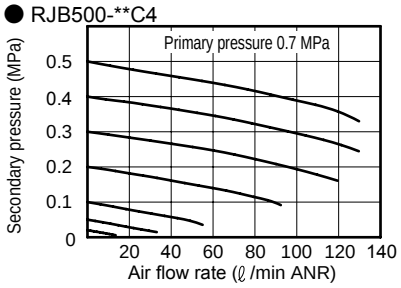

● RJB500-**C6

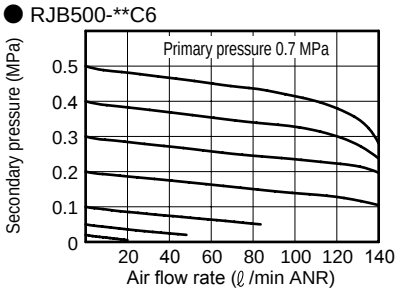

● RJB500-**C4-L

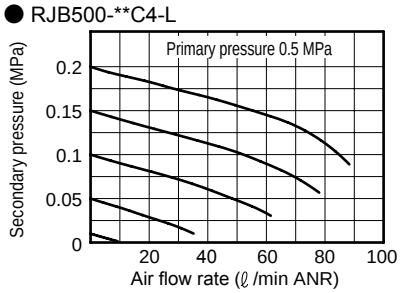

● RJB500-**C6-L

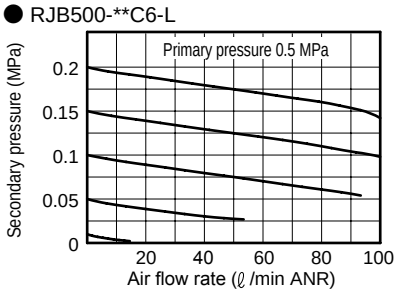

Pressure characteristics

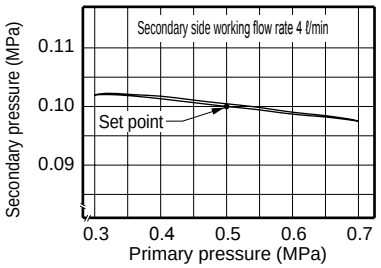

Relief characteristics

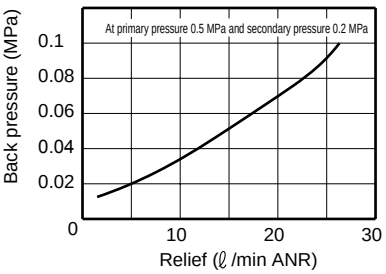

How to order

RJB500 - **SSC4** - **P**

- RJB500: Model No.
- SSC4: Ⓐ Connection
- P: Ⓑ Option

Code			Description
Ⓐ Connection			
Direction	IN	S	Straight
		L	Elbow
	OUT	S	Straight
		L	Elbow
Bore size		C4	ø4
		C6	ø6
Ⓑ Option			
Panel mount		Blank	Without nut
		P	With nut
Pressure range		Blank	0.02 to 0.5 MPa *1
		L	0.01 to 0.2 MPa *2
Pressure gauge		Blank	With pressure gauge
		T	No pressure gauge (gauge port Rc1/8)

⚠ Precautions for model No. selection

*1: A 0 to 1.0 MPa pressure gauge is assembled.
*2: A 0 to 0.4 MPa pressure gauge is assembled.
*3: Indicate option code "P" for panel mounting.

Internal structure and parts list

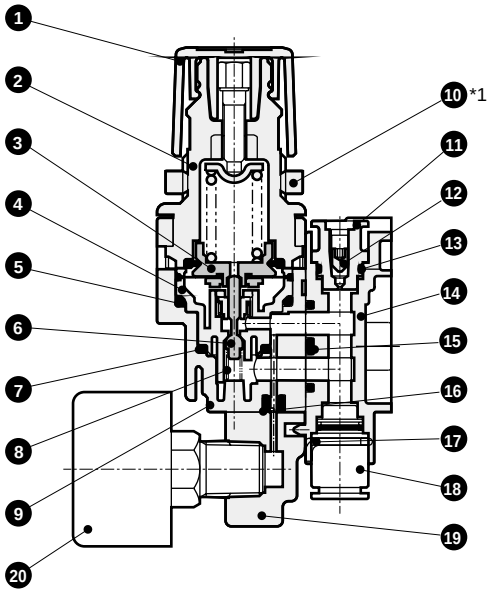

*1: A mounting nut is optional. Nut is attached only for option code "P".

No.	Part name	Material
1	Knob	Polyacetal resin
2	Cover	Polyamide resin
3	Diaphragm assembly	Polyacetal resin/nitrile rubber/chloroprene rubber
4	Valve guide assembly	Polyacetal resin/copper alloy/stainless steel
5	O-ring	Fluoro rubber
6	Valve	Stainless steel
7	O-ring	Fluoro rubber
8	Spring	Stainless steel
9	Body	Polyamide resin
10	Mounting nut	Polyacetal resin
11	Bleed plug	Polyamide resin
12	Hexagon socket set screw	Stainless steel
13	O-ring	Nitrile rubber
14	Piping block assembly	Polyamide resin/steel
15	Body packing seal	Hydrogenated nitrile rubber
16	Packing	Nitrile rubber
17	Stop pin	Stainless steel
18	Cartridge fitting	
19	Gauge plug	Polyamide resin
20	Pressure gauge	

Dimensions

● RJB500 axial piping

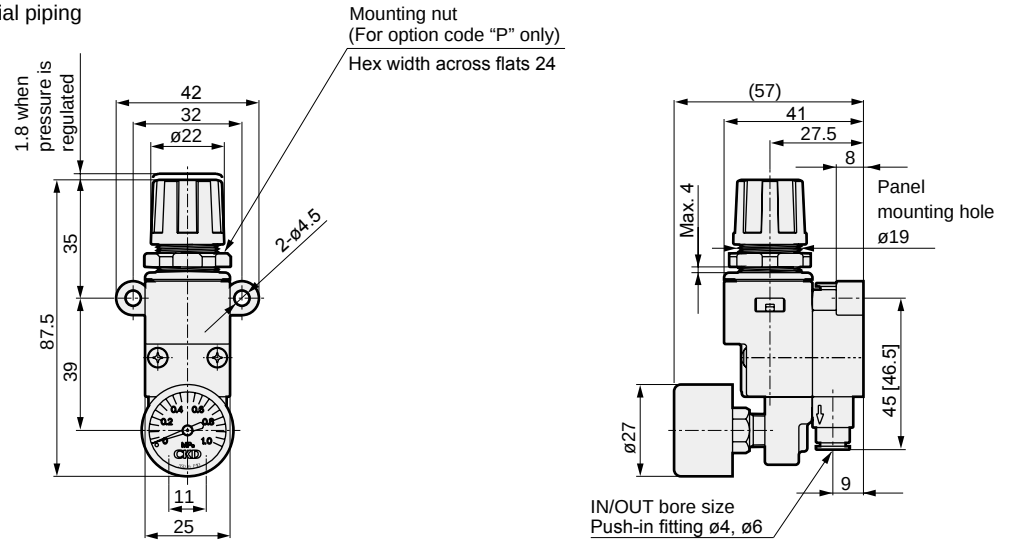

Dimensions shown in [ ] are for the push-in fitting ø6

● RJB500 elbow piping

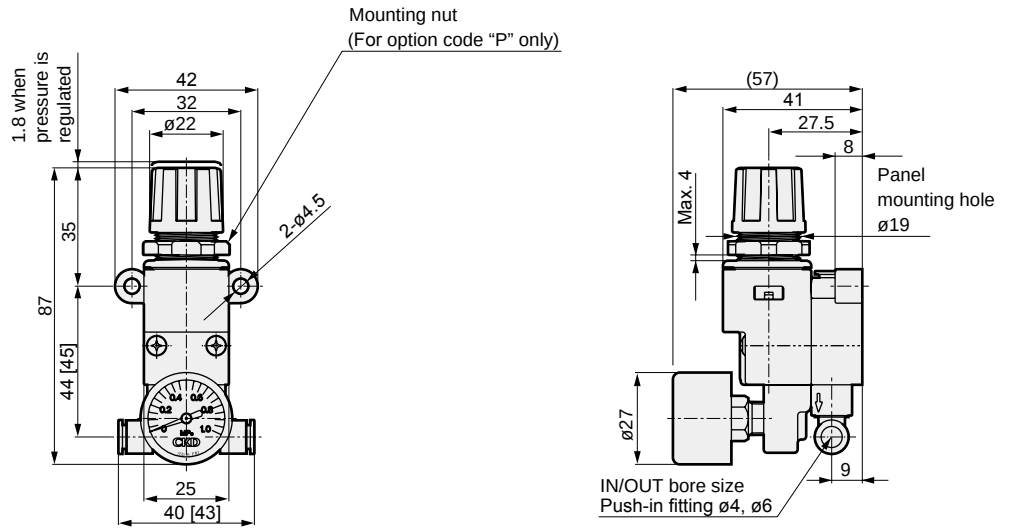

Dimensions shown in [ ] are for the push-in fitting ø6

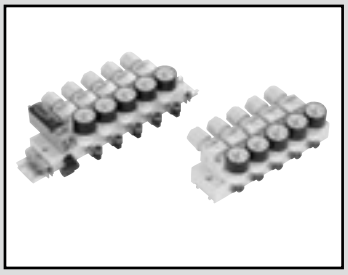

Block manifold compact direct acting precision regulator

MNRJB500 Series

Mix manifold of RJB500/RB500 Series

● Port size: Push-in fitting ø4, ø6, ø8

RoHS CAD

JIS symbol

Common supply

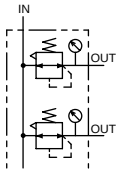

Individual supply

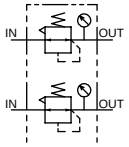

Specifications

1 MPa = 10 bar

Item		MNRJB500A	MNRJB500B
Working fluid		Compressed air	
Max. working pressure MPa		0.8 (≈120 psi, 8 bar)	
Proof pressure MPa		1.2 (≈170 psi, 12 bar)	
Ambient / fluid temperatures ℃		5 (41°F) to 60 (140°F)	
Set pressure MPa		0.02 (≈2.9 psi) to 0.5 (≈73 psi) (0.01 (≈1.5 psi) to 0.2 (≈29 psi)) (*1)	
Sensitivity MPa		0.001 (≈0.15 psi) {Lock sensitivity 0.004 (≈0.58 psi)} (*2)	
Air consumption ℓ/min		1.5 (*3)	
Port size	IN	Push-in fitting ø6/ø8	Push-in fitting ø4/ø6
	OUT	Push-in fitting: ø4/ø6	
	GAUGE	Rc 1/8	
Block manifold Weight calculation formula (n: station No.) g		109n+126	111n+94

*1: Values in parentheses are for low pressure.
*2: Pressure sensitivity setting for the pressure adjustment knob block's minimum spacing.
*3: Value for secondary side setting pressure 0.1 MPa.

Option weight

* Add to the weight of the standard accessories. n: Station No.

Unit: g

Code	Fitting + port size IN/OUT						Pressure gauge	Mounting method
	SS**	SL**	LS**	LL**	S*	L*	T	D
MNRJB500A	-	6n	6n+2	6n+2			-31n	-6n-49
MNRJB500B					-	12n	-31n	-6n-49

Flow characteristics

● MNRJB500A-**C64
● MNRJB500B-**C4

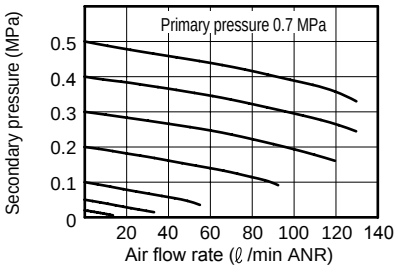

● MNRJB500A-**C86
● MNRJB500B-**C6

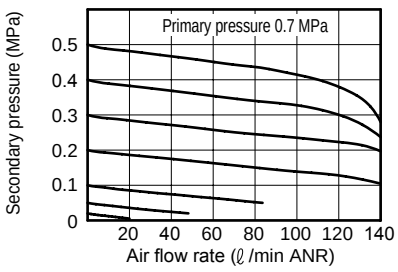

● MNRJB500A-**C64-L
● MNRJB500B-**C4-L

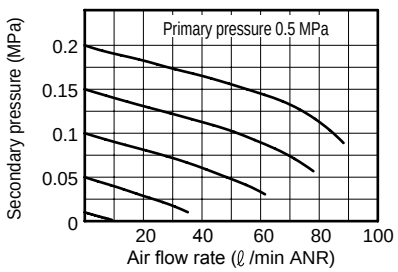

● MNRJB500A-**C86-L
● MNRJB500B-**C6-L

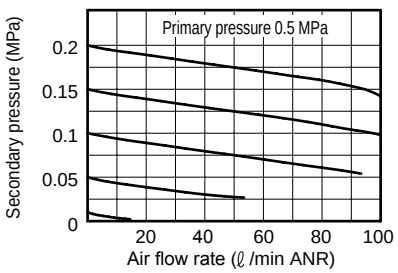

Pressure characteristics

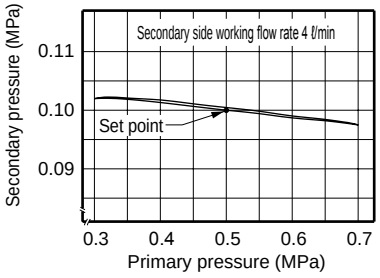

Relief characteristics

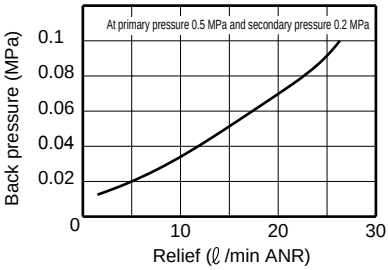

*1: For the common supply, the primary pressure will become insufficient when using multiple stations simultaneously. Install 1 air supply block per three stations. Use an air supply port larger than OUT bore size.

How to order

MNRJB500A - **SSC64** - **5** - **L** - **D**

Ⓐ Model No. *1

Ⓑ Fitting

Ⓒ Port size

Ⓓ Station No. *2

Ⓔ Option *3

Ⓕ Mounting method

Code	Description
Ⓐ Model No.	
MNRJB500A	Common supply
MNRJB500B	Individual supply
Ⓑ Fitting	
IN direction	
S	Straight
L	Elbow
OUT direction	
S	Straight
L	Elbow

Ⓒ Port size IN/OUT		MNRJB500A	MNRJB500B
C64	IN; ø6, OUT; ø4	●	
C66	IN; ø6, OUT; ø6	●	
C84	IN; ø8, OUT; ø4	●	
C86	IN; ø8, OUT; ø6	●	
C4	IN, OUT; ø4		●
C6	IN, OUT; ø6		●

Ⓓ Station No.	
1	1 station
to	to
10	10 stations

Ⓔ Option			MNRJB500A	MNRJB500B
Pressure range	**Blank**	0.02 to 0.5 MPa *4	●	
	L	0.01 to 0.2 MPa *5	●	
Pressure gauge	**Blank**	With pressure gauge	●	
	T	No press gauge (gauge port Rc1/8)	●	
Flow direction	**Blank**	Standard flow (left → right)	●	
	X1	Reverse flow (right → left)	●	

Ⓕ Mounting method	
Blank	DIN rail mount
D	Direct mount

⚠ Precautions for model No. selection

*1 : The air supply block is one station.
When using three or more stations simultaneously with the common supply, increase one supply block station for every three stations.
Designate with mix manifold specifications sheet.
*2 : Up to five direct mounting stations can be used.
*3 : Options and pressure gauges for each regulator block are the same.
*4 : A 0 to 1.0 MPa pressure gauge is assembled.
*5 : A 0 to 0.4 MPa pressure gauge is assembled.
*6 : When other than basic model specifications, ask CKD to issue the mix manifold specifications sheet on page 505.

Dimensions CAD

● Common supply DIN rail mount

MNRJB500A-**C**-*

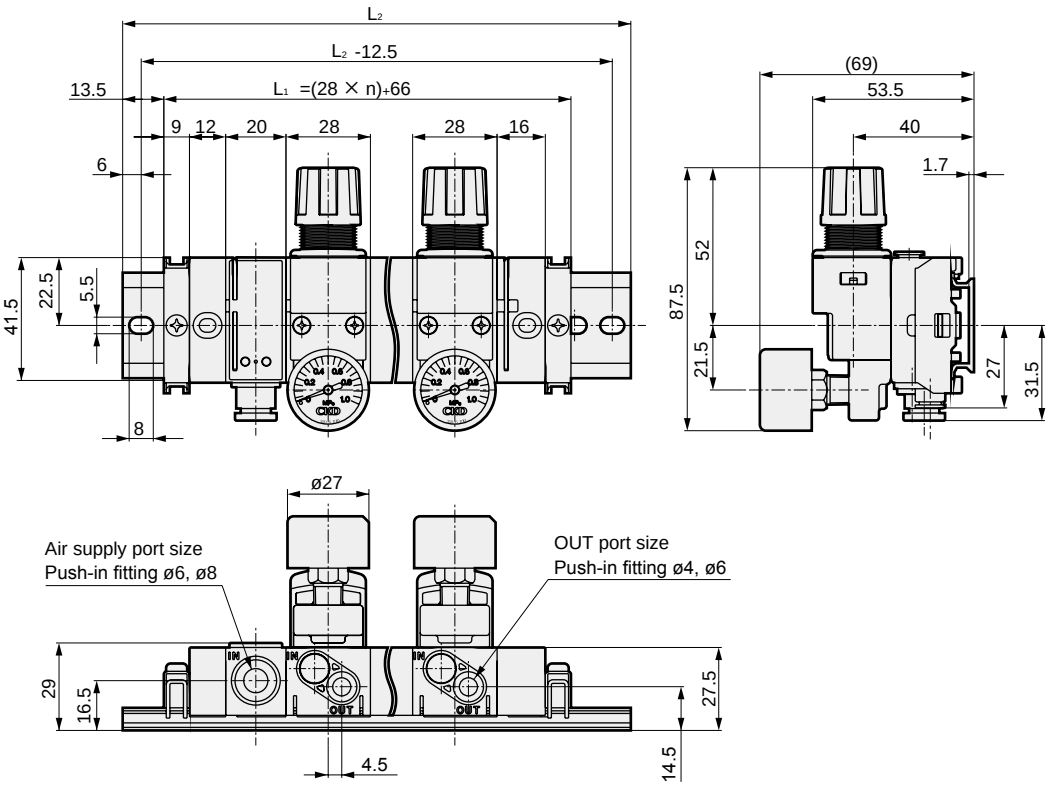

Station No.	L_2 dimension
1	125
2	150
3	175
4	212.5
5	237.5
6	262.5
7	287.5
8	325
9	350
10	375

● Common supply direct mount

MNRJB500A-**C**-*-D

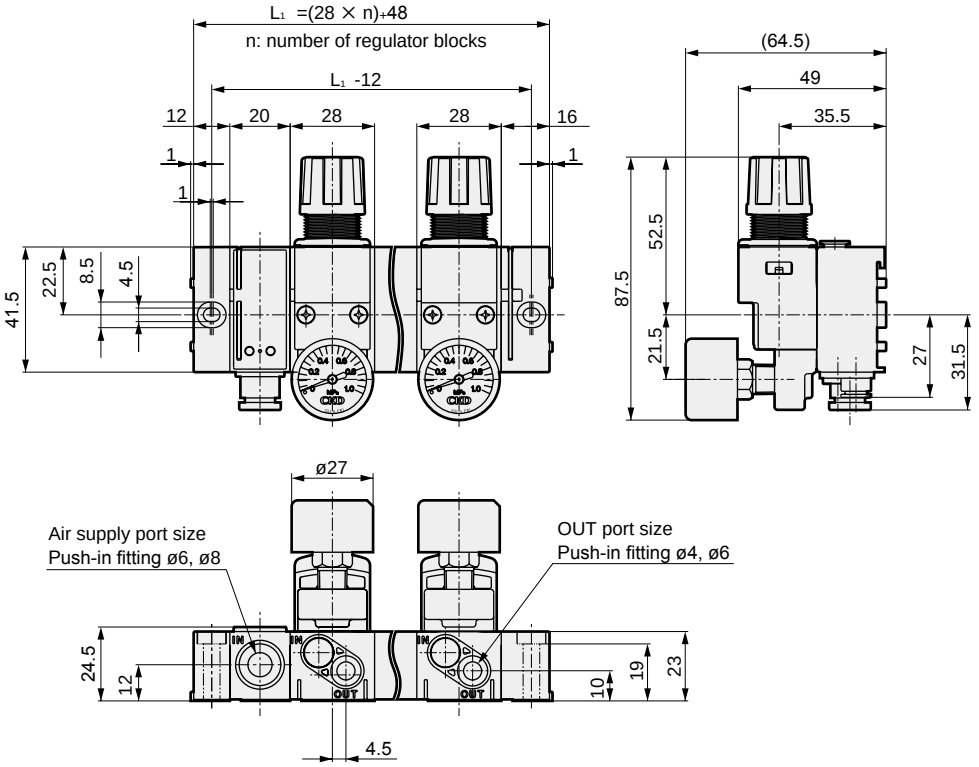

Dimensions

● Individual supply DIN rail mount

MNRJB500B-**C*-*

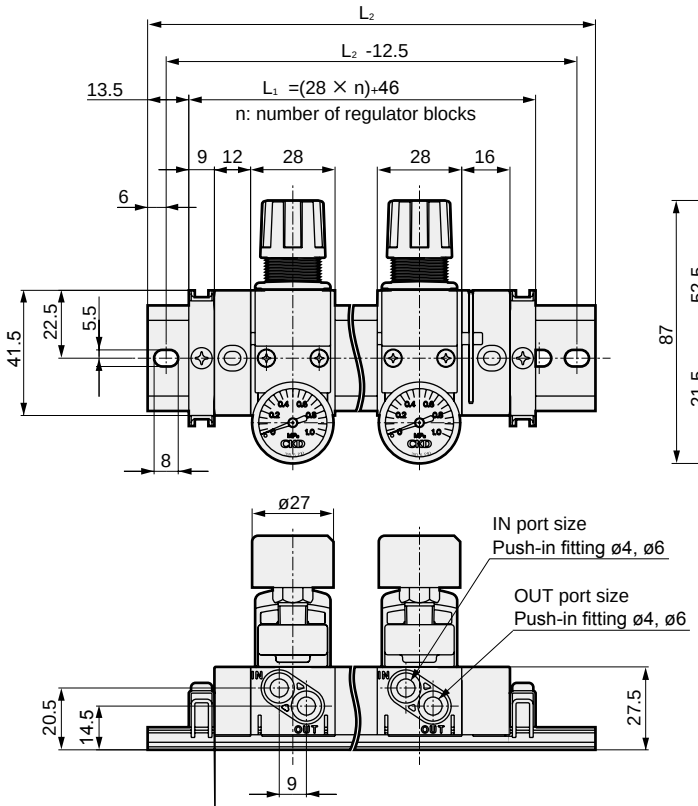

Station No.	L₂ dimension
1	100
2	137.5
3	162.5
4	187.5
5	212.5
6	250
7	275
8	300
9	325
10	362.5

● Individual supply direct mount

MNRJB500B-**C*-*-D

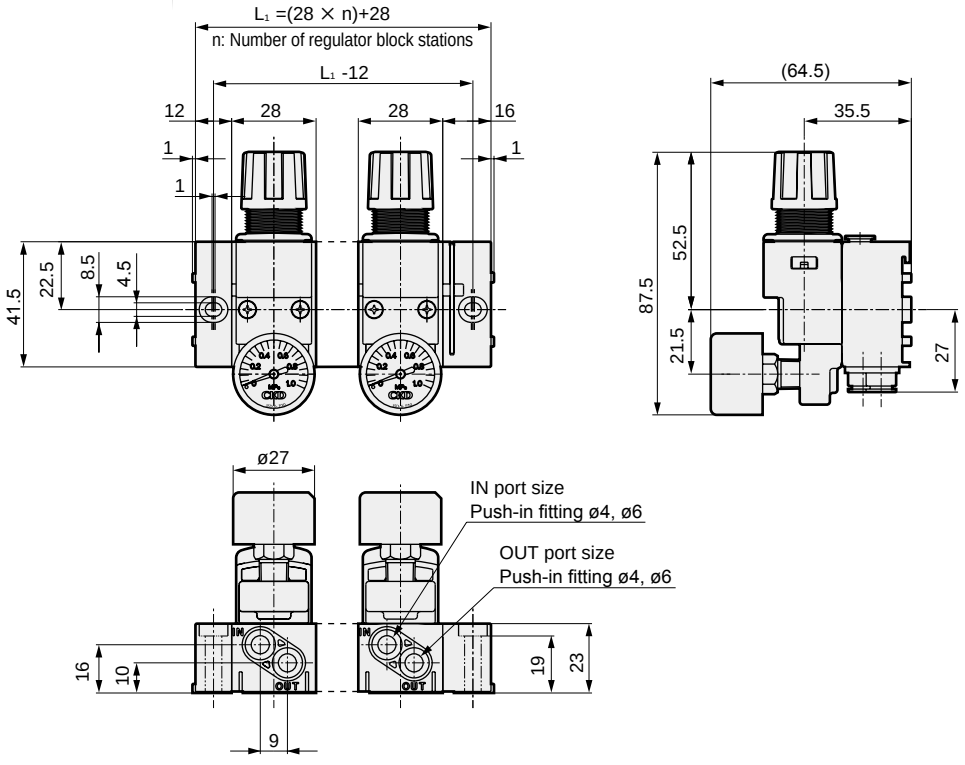

Pressure switch/push-in fitting elbow dimensions

● Air supply block with pressure gauge

NRB500-APS-*C*

Pressure switch APS is integrated into the air supply block. Primary pressure can be controlled.

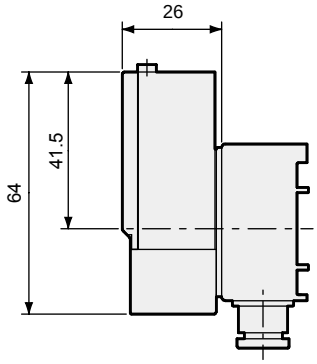

● Air supply block

Push-in fitting elbow

NRB500-NP-LC*

Front or rear piping is possible with air supply port and elbow fitting.

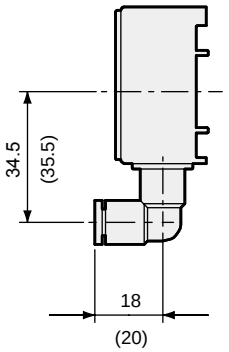

Dimension in ( ) is for C8

● Regulator block

Push-in fitting elbow

NRJB500*-**C*

Front or rear piping is possible with IN and OUT ports and elbow fitting.

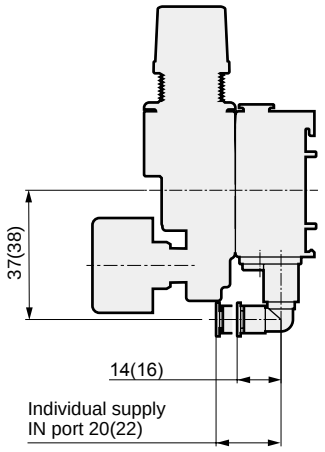

Dimension in ( ) is for C6

MEMO

Regulator block

How to order

NRJB500B - SSC4 - L

- Ⓐ Model No.
- Ⓑ Connection
- Ⓒ Option

Code			Description
Ⓐ Model No.			
NRJB500A			Common supply
NRJB500B			Individual supply
Ⓑ Connection			
Direction	*1 **IN**	**S**	Straight
		L	Elbow
	OUT	**S**	Straight
		L	Elbow
Bore size	**IN/ OUT**	**C4**	ø4
		C6	ø6
Ⓒ Option			
Pressure range		**Blank**	0.02 to 0.5 MPa *2
		L	0.01 to 0.2 MPa *3
Pressure gauge		**Blank**	With pressure gauge
		T	No pressure gauge (gauge port Rc1/8)

⚠ Precautions for model No. selection

*1: For common supply, IN port connection is not required.
*2: A 0 to 1.0 MPa pressure gauge is assembled.
*3: A 0 to 0.4 MPa pressure gauge is assembled.

● Common supply straight
Downward piping is enabled by using an OUT port with straight fitting.

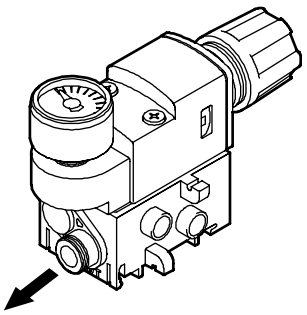

● Common supply elbow
Front or rear piping is enabled by OUT port with elbow fitting.

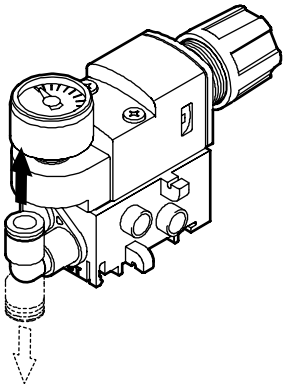

● Individual supply straight
Front or rear piping is enabled by using IN, OUT ports with straight fitting.

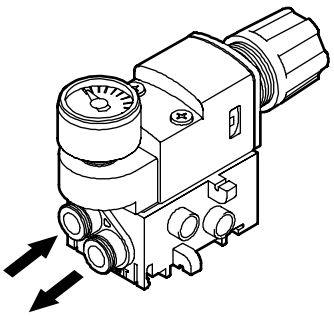

● Individual supply elbow
Front or rear piping is possible with IN and OUT ports and elbow fitting.

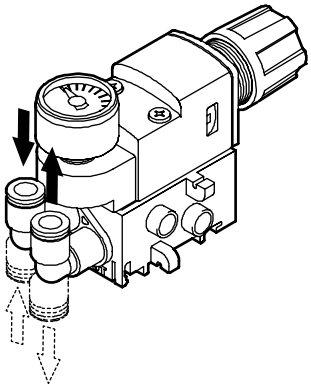

Sub-base

How to order

NRJB500B - NS - SSC4 MP

- Ⓐ Model No.
- Ⓑ Connection
- Ⓒ Option

Code			Description
Ⓐ Model No.			
NRJB500A			Common supply
NRJB500B			Individual supply
Ⓑ Connection			
Direction	*1 **IN**	**S**	Straight
		L	Elbow
	OUT	**S**	Straight
		L	Elbow
Bore size	**IN/ OUT**	**C4**	ø4
		C6	ø6
Ⓒ Option			
Blank			No masking plate
MP			With masking plate

⚠ Precautions for model No. selection

*1: For common supply, IN port connection is not required.

● Straight for common supply
OUT port with straight fitting

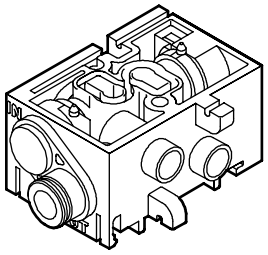

● Elbow for common supply
OUT port with elbow fitting

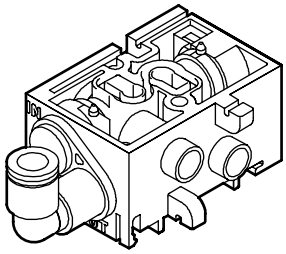

● Straight for individual supply
IN, OUT ports with straight fitting

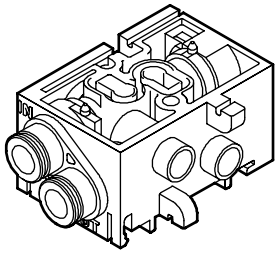

● Elbow for individual supply
IN, OUT ports with elbow fitting

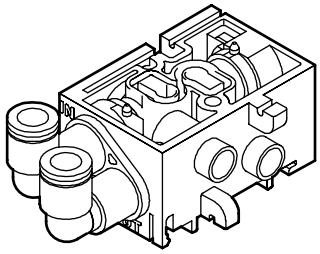

Regulator body

How to order

RJB500 - 00 S - L

- Ⓐ Connection
- Ⓑ Option

Code		Description
Ⓐ Connection		
S		Discrete (for RJB500)
M		Manifold (for MNRJB500A,B)
Ⓑ Option		
Panel Mount	**Blank**	Without nut
	P	With nut
Pressure range	**Blank**	0.02 to 0.5 MPa *1
	L	0.01 to 0.2 MPa *2
Pressure gauge	**Blank**	With pressure gauge
	T	No pressure gauge (gauge port Rc1/8)

⚠ Precautions for model No. selection

*1: A 0 to 1.0 MPa pressure gauge is assembled.
*2: A 0 to 0.4 MPa pressure gauge is assembled.

● Regulator body

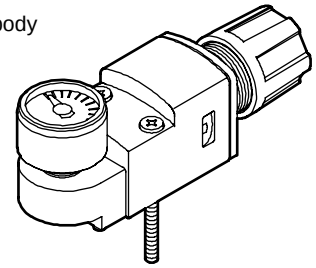

Common supply block

How to order

NRJB500 - NP - SC6

Ⓐ Connection

Code		Description
Ⓐ Connection		
Direction	**S**	Straight
	L	Elbow
Bore size	**C6**	ø6
	C8	ø8

● Straight
Air supply port with straight fitting

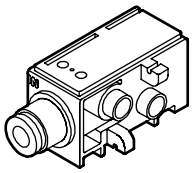

● Elbow
Air supply port with elbow fitting

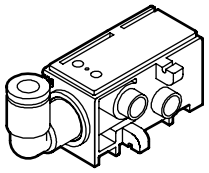

Common supply block with pressure switch

How to order

NRB500 - APS - SC6 - 3
*1

Ⓐ Connection

Ⓑ Lead wire length

Code		Description
Ⓐ Connection		
Direction	**S**	Straight
	L	Elbow
Bore size	**C6**	ø6
	C8	ø8
Ⓑ Lead wire length		
Blank		1 m
3		3 m
5		5 m

⚠Precautions for model No. selection

*1: Grease is applied to the APS body before assembly. This part is not compatible with grease-free specifications.

● Straight
Air supply port with straight fitting

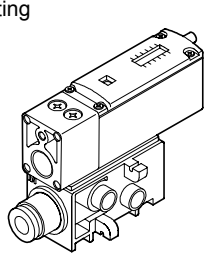

● Elbow
Air supply port with elbow fitting

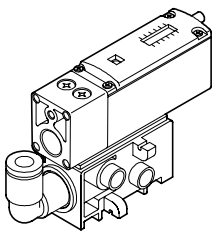

End block

How to order

NRJB500 - NE (D)

Ⓐ Connection

Code	Description
Ⓐ Connection	
Blank	End block R for DIN rail (right)
L	End block L for DIN rail (left)
D	Direct end block R
DL	Direct end block L

● End block R for DIN rail

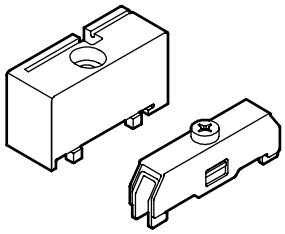

● End block L for DIN rail

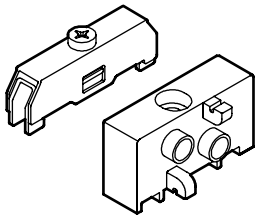

● Direct end block R

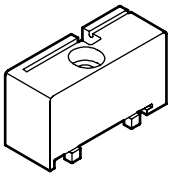

● Direct end block L

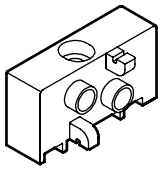

End blocks R and L are required for manifold configuration.
For DIN rail, use end blocks R and L with DIN rail bracket.

DIN rail

How to order

NRB500 - BAA (150)

Ⓐ DIN rail dimensions *1

Code	Description
Ⓐ DIN rail dimensions	
125	125 mm
150	150 mm
⋮	⋮

● DIN rail

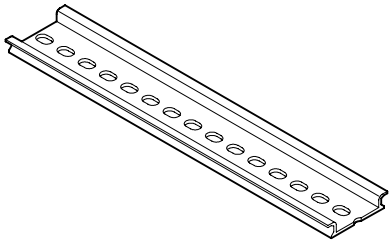

⚠ Precautions for model No. selection

*1: For the DIN rail dimensions, refer to the mix manifold specifications preparation methods, the DIN rail length and manifold dimensions, and indicate with mm units.

Push-in cartridge fitting (regulator block)

How to order

(NRJB500) - JOINT - (CL4)

Ⓐ Type

Code	Description	
Ⓐ Type		
C4	Straight ø4	
C6	Straight ø6	
CL4	Elbow ø4 (discrete)	
CL6	Elbow ø6 (discrete)	
CLL4	Long elbow ø4 (for manifold)	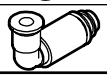
CLL6	Long elbow ø6 (for manifold)	

Cartridge fitting (common supply block)

How to order

NRJB500 - Q - JOINT - L6

Ⓐ Type

Code	Description	
Ⓐ Type		
6	Straight ø6	
8	Straight ø8	
L6	Elbow ø6	
L8	Elbow ø8	

Pressure gauge

How to order

G39D - 6 - P10

Ⓐ Pressure display

Code	Description
Ⓐ Pressure display	
P10	0 to 1.0 MPa
P04	0 to 0.4 MPa

Dimensions

● G39D

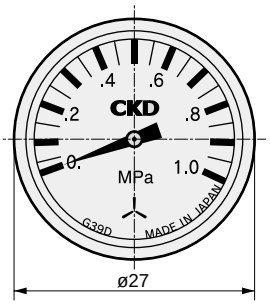

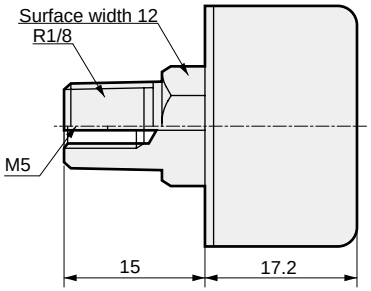

Weight: 37 g

Blanking plug

How to order

GWP 4 - B

Ⓐ Connection

Code	Description
Ⓐ Connection	
4	ø4
6	ø6
8	ø8

Dimensions

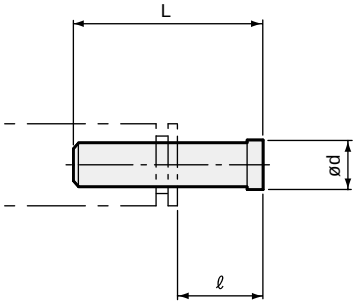

⚠Precautions for model No. selection

*1: Sales unit is 10 pieces per unit.

Model No.	Fitting port size ø	L	ℓ	d	Weight g
GWP 4-B	4	27	11	6	0.5
GWP 6-B	6	29	11.5	8	1
GWP 8-B	8	33	14	10	2

⚠ CAUTION

Disassembling and assembling the block manifold, and replacing the cartridge fitting

To change the regulator block when the regulator body or regulator block specifications change or when life has been reached, or when adding an air supply block, use the following procedures to expand, disassemble, and assemble parts. Refer to the separate instruction manual for details. Stop the air pressure source supply and release residual pressure before starting disassembly work. After assembling parts, confirm that the lock pin is completely inserted in the coupling groove between blocks before use. When using DIN rail installing, confirm that the DIN rail bracket is securely fixed onto the end block with no gaps. When directly installing without a DIN rail, check that the end block is fixed with screw before use. Air could leak between blocks if the end block is not securely fixed.

Replacing the regulator block and air supply block

(1) When using the DIN rail, loosen the DIN rail bracket fixing screw.
When directly installing without a DIN rail, remove the end block fixing screw.

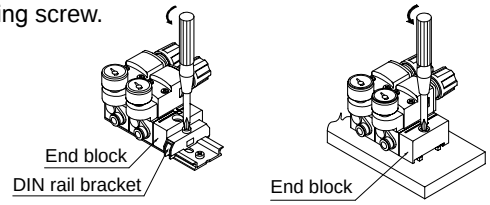

(2) Using a thin-tipped screwdriver, pull out the manifold lock pin coupling the regulator block and air supply block to be replaced.

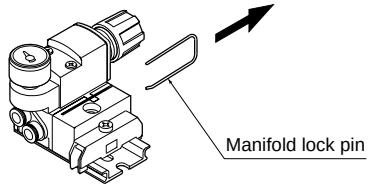

(3) Slide the block to the end block side, and provide a space of 10 mm on each end of the block to be replaced. When installed directly, pull out blocks on both sides.

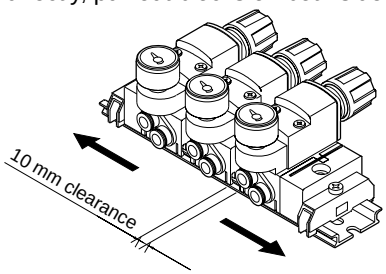

(4) Raise the pressure gauge side and pull the block toward the pressure adjustment knob to remove it from the DIN rail. When the DIN rail brackets on both sides are slid 2 mm or more from the end block, the entire manifold block can be removed.

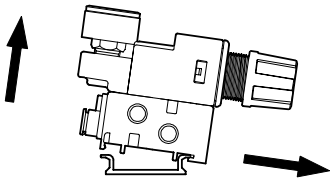

(5) Replace with a new block.
(6) Check that there is no gap between blocks, and then insert the manifold lock pin until it contacts the bottom of the groove.
(7) With reference to the safety precautions and mounting methods, fix the manifold block.

Increasing the regulator and air supply block rows

(1) If there are plans to add more blocks, order DIN rail length to allow for the expansion. If the DIN rail is too short when blocks are added, replace with a DIN rail that accommodates the expansion.

(2) When installing with a DIN rail, fix DIN rail brackets. When directly installing without a DIN rail, fix the end block.

Replacing the cartridge fitting

Replacing the compact regulator
(1) Loosen the screw on the regulator body, and disassemble the piping block.
(2) Using a flathead screwdriver, etc., remove the lock pin inserted onto the top of the sub-base. Replace the cartridge fitting. Confirm that there is no debris, etc., on the fitting's O-ring, and then assemble it in the original position.
Tighten the regulator body tightening screw with a torque of 0.5 to 0.8 N·m.

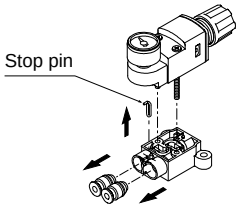

Replacing the block manifold
(1) Disassemble the block following the regulator block and air supply block replacement procedures.
(2) To replace the regulator block's cartridge fitting, loosen the screw on the regulator body, and disassemble the sub-base. Using a flathead screwdriver, etc., remove the lock pin inserted onto the top of the sub-base. Replace the cartridge fitting. Confirm that there is no dirt, etc., on the fitting's O-ring, and then assemble it in the original position.
Tighten the regulator body tightening screw with a torque of 0.5 to 0.8 N·m.

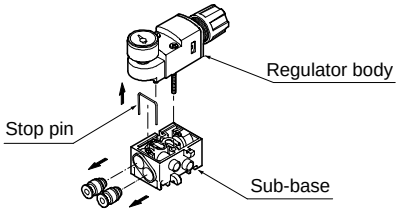

To replace the air supply block cartridge fitting, remove the lock pin inserted on the air supply block side with a flathead screwdriver, etc. Then replace the cartridge fitting.

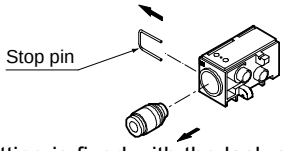

(3) Check that the cartridge fitting is fixed with the lock pin and that it will not come out.

How to fill out mix manifold specifications sheet

● Mix manifold model No.

Mix manifolds consisting of the compact direct acting precision (RJB500 Series) and general-purpose (RB500 S eries) are available.
Refer to pages 498 to 502 for model No. per component.

MNRB500A - MX - 3 - ○

Ⓐ Model No.
Ⓑ Number of regulator blocks
Ⓒ Installation method

Code	Description
Ⓐ Model No.	
MNRJB500A	Common supply (when selecting compact direct acting precision regulator only)
MNRB500A	Common supply (for compact direct acting precision regulator, general purpose regulator mixed)
MNRJB500B	Individual supply (when selecting compact direct acting precision regulator only)
MNRB500B	Individual supply (for compact direct acting precision regulator, general regulator mixed)
Ⓑ Number of regulator blocks	
1	1 station
2	2 stations
⋮	⋮
Ⓒ Installation method	
Blank	DIN rail
D *1	Direct mount

⚠ Precautions for model No. selection

*1: The number of stations of direct mount blocks should be within 6 blocks, including regulator and air supply blocks. However, a regulator block is to be 5 stations or less.
2: Grease-free specifications are not available when NRB500 and common supply block with APS are used. Grease is applied before assembly.
*3: Contact CKD if the common supply and the individual supply types are combined.

Configuration	Installation position / Model No.	1	2	3	4	5	6	7	8	9	10	11	12	13	14	Qty.
End block L	N RB 500 - NE	○														1
Common supply block	N RB 500 - NP - ☐		○													
Common supply block with APS	N RB500 - APS - SC6 - 3			○												1
Regulator block	N RB 500 A - SC6 - ☐				○	○										1
	N RJB 500 A - SC6 - ☐															2
	N ☐ 500 ☐ - ☐ - ☐															
	N ☐ 500 ☐ - ☐ - ☐															
	N ☐ 500 ☐ - ☐ - ☐															
	N ☐ 500 ☐ - ☐ - ☐															
	N ☐ 500 ☐ - ☐ - ☐															
	N ☐ 500 ☐ - ☐ - ☐															
Sub-base with masking plate	N ☐ 500 ☐ - NS - ☐ - MP															
End block R	N RB 500 - NE						○									1
DIN rail	L_2= 175 mm	Accessory Blanking plug				GWP4-B pcs. GWP6-B pcs.					GWP8-B pcs.					

● DIN rail length and manifold dimensions

Manifold length L2: Refer to the table on the right.

$L=(28 \times n)+(20 \times m)+ 28$

n: Number of regulator blocks
m: Number of supply blocks

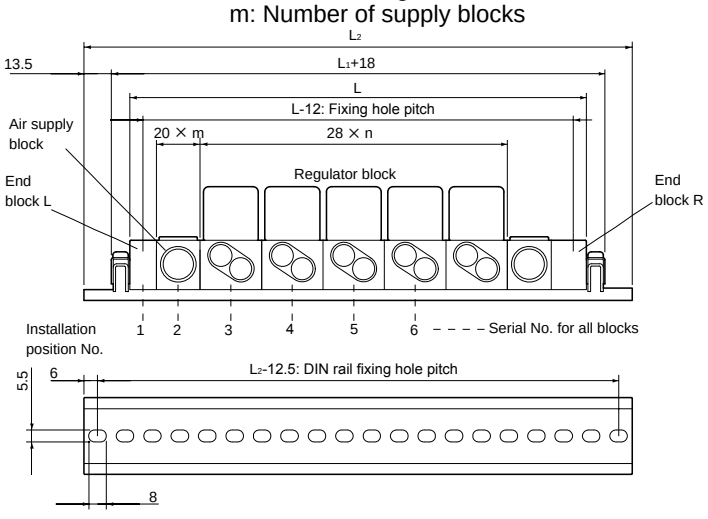

● Common supply
Manifold L_2 dimensions

Stn No.	m=1 Dimension	m=2 Dimension	m=3 Dimension
1	125		
2	150		
3	175	200	
4	212.5	225	
5	237.5	262.5	275
6	262.5	287.5	300
7	287.5	312.5	337.5
8	325	337.5	362.5
9	350	375	387.5
10	375	400	412.5

● Individual supply
Manifold
L_2 dimension

Stn No.	L_2 Dimension
1	100
2	137.5
3	162.5
4	187.5
5	212.5
6	250
7	275
8	300
9	325
10	362.5

MNRJB500 mix manifold specification sheet

Issued / /

Contact

Your company name

Slip No. Quantity Set Delivery date / Contact

Order No.

● Mix manifold model No.

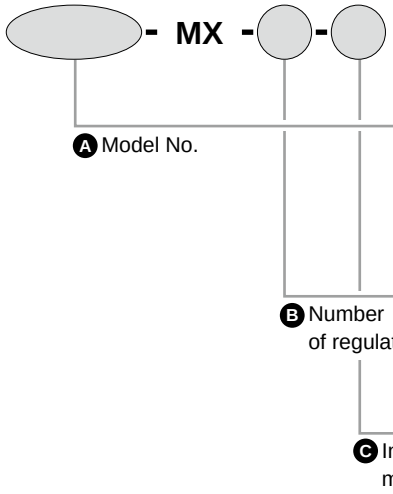

Code	Description
Ⓐ Model No.	
MNRJB500A	Common supply (when selecting compact direct acting precision regulator only)
MNRB500A	Common supply (for compact direct acting precision regulator, general purpose regulator mixed)
MNRJB500B	Individual supply (when selecting compact direct acting precision regulator only)
MNRB500B	Individual supply (for compact direct acting precision regulator, general regulator mixed)
Ⓑ Number of regulator blocks	
1	1 station
2	2 stations
⋮	⋮
Ⓒ Installation method	
Blank	DIN rail
D *1	Direct mount

⚠ Precautions for model No. selection

*1: The number of stations of direct mount blocks should be within 6 blocks, including regulator and air supply blocks.
However, a regulator block is to be 5 stations or less.
2: Grease-free specifications are not available when NRB500 and common supply block with APS are used. Grease is applied before assembly.
*3: Contact CKD if the common supply and the individual supply types are combined.

● Mix manifold specification

Configuration	Installation position / Model No.	1	2	3	4	5	6	7	8	9	10	11	12	13	14	Qty.
End block L	N □ 500-NE															
Common supply block	N □ 500-NP- □															
Common supply block with APS	NRB500-APS- □ - □															
Regulator block	N □ 500 □ - □ - □															
	N □ 500 □ - □ - □															
	N □ 500 □ - □ - □															
	N □ 500 □ - □ - □															
	N □ 500 □ - □ - □															
	N □ 500 □ - □ - □															
	N □ 500 □ - □ - □															
	N □ 500 □ - □ - □															
Sub-base with masking plate	N □ 500 □ - NS - □ -MP															
End block R	N □ 500-NE															
DIN rail *4	L_2= mm	Accessory				GWP4-B				pcs.	GWP8-B					pcs.
		Blanking plug				GWP6-B				pcs.						

*4: Select the DIN rail L_2 dimensions from the L_2 dimensions given on page 504.

Pneumatic components

Safety Precautions

Be sure to read this section before use.
Refer to Intro Page 63 for precautions for general pneumatic components.

Product-specific cautions: Compact direct acting precision regulator RJB500 Series

Design/selection

⚠CAUTION

■ Avoid using this product where strong pulsation of pressure or vibration is applied.

■ Contact CKD regarding frequent operation.

■ Install a 5 μm or smaller air filter on the primary side of the regulator.

■ Differential pressure between primary and secondary sides is to be 0.1 to 0.7 MPa.

■ This product cannot be used as a cut-off valve (The primary pressure cannot be sealed even if the pressure adjustment knob is loosened).

■ Even if the primary and secondary pressures differ by 0.7 MPa or less, the secondary pressure may cause pulsation or vibration noise. In this case, lower primary pressure.
If pulsation or noise continues, contact CKD.

■ ON/OFF operation with the directional switching valve on the primary side of regulator will cause large set pressure changes. Therefore, it is recommended that the directional switching valve be installed on the secondary side of the regulator.

■ Output pressure exceeding the regulator's set pressure could result in damage or faulty operation of the secondary side devices. Be sure to install a safety device.

Mounting, installation and adjustment

⚠CAUTION

■ When transporting or installing the product, do not drop it. Failure of indicator accuracy may occur.

■ Do not install the product in a location with high temperatures or high humidity. Otherwise, malfunctions may result.

■ When installing a pressure gauge, be sure to use a wrench on the width across flats. If another section is used, air leakage or damage could result.

■ When installing or piping, observe the following points.
- Confirm the direction of the IN arrow indicating the air inlet before connecting. A reverse connection could result in improper operation.
- Do not move or swing the product by the pressure adjustment knob.
- When installing a compact regulator, use M4 plain washer attached screws, and fix them with tightening torque 1.4 to 2.0 N·m or less.

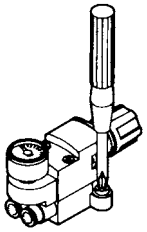

- When installing a block manifold with DIN rail, fix the DIN rail while fixing the bracket between the manifold end blocks.
Recommended tightening torque of DIN rail bracket is 1.4 to 2.0 N·m.
Fix DIN rail bracket, while making no gaps between end blocks. Care must be taken when expanding, maintaining or disassembling regulator blocks.

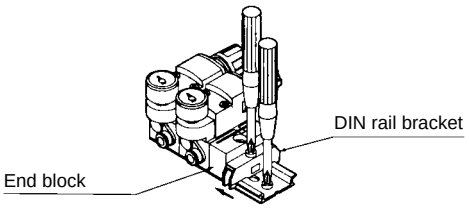

- Do not install this product in a location where it may be subject to vibrations or shocks.
- Before mounting the air pipe to be used, flush it out well.
- Tighten with 3.5 N-m or less tightening torque when mounting a pressure gauge or a fitting for external porting to the pressure gauge mounting board.

Mounting, installation and adjustment

⚠ CAUTION

- When installing the product directly without a DIN rail (direct mount), fix the end blocks on both sides with M4 set screws.
  Recommended tightening torque is 1.4 to 2.0 N·m.
  Install the product on a fully flat surface. If the seating surface is small, external pressure from above may damage the manifold connection section. If flat seating plane is not available, use DIN rail mount.

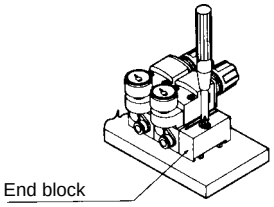

- When using in parallel as below, the OUT side of the circuit must not be closed. If closed circuit is required, install a check valve on each OUT side.

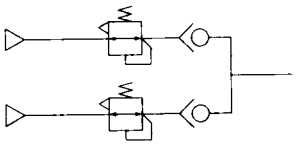

- When installing on a panel, loosen the mounting nut; it will function as a jack and make the knob easily removable. Fix the product on a panel with a mount nut.

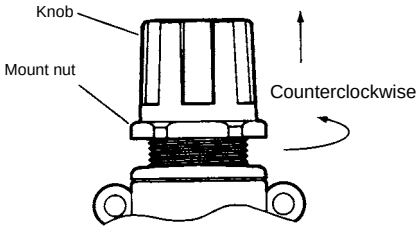

- A push-in fitting is used for the regulator piping. The tube may come off or air leakage may occur depending on diametric accuracy, wall thickness, or hardness of piping tube. Use a CKD specified tube. When mounting or dismounting a fitting, press the release ring evenly, then pull out the tube without twisting it. To reuse the tube, cut the section scored by the chuck finger.

Tube	O.D. (mm)	Outer diam-tolerance (mm)	Bore (mm)	Min. bending range (mm)
Soft nylon F-1500 Series	ø4	±0.1	ø2.5	10
	ø6		ø4	20
	ø8		ø5.7	30
Urethane U-9500 Series	ø4	+0.1 -0.15	ø2	10
	ø6		ø4	20
	ø8	+0.1 -0.2	ø5	30
Urethane NU Series	ø4	±0.1	ø2.5	8
	ø6		ø4.5	15
	ø8		ø6	24

- Securely insert piping tube into push-in fitting and check that tube does not dislocate before use.
- Cut the push-in fitting tube at right angles with a dedicated tool.
- Adjusting constant bleed
  Turn the set screw of the constant bleed port to adjust the constant bleed amount. Although the constant bleed amount increases in proportion to the set pressure, it can be reduced if the set pressure is 0.1 MPa or over. In low pressure ranges, constant bleed should be increased to improve sensitivity.
  Constant bleed is set to 1.5 ℓ/min (ANR) before the product is shipped from CKD. Insert an Allen wrench into the constant bleed port and adjust the rate. After adjustment, confirm that set pressure does not increase. When adjusting the constant bleed, do not turn the set screw in the closed direction completely. It will not be possible to adjust pressure and damage could occur.

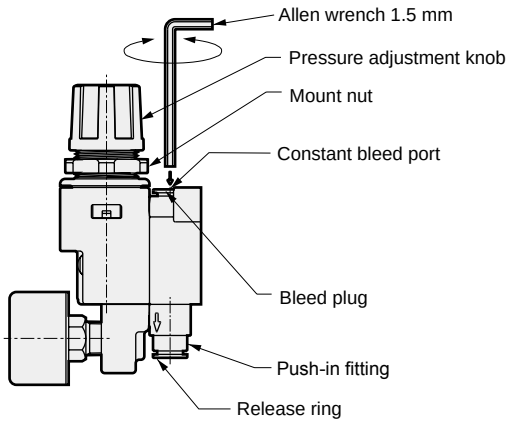

Use/maintenance

⚠CAUTION

■ Working air quality

- Use clean compressed air filtered with a 5 μm air filter.
- Use only compressed air. Air containing corrosive gases, fluids or chemicals could result in improper pressure adjustment due to body damage or rubber swelling.

■ Working environment

Avoid using the products in the following environments.

- When ambient temperature exceeds the range of 5 to 60˚C.
- Places where the unit will be exposed to dripping water and/or coolant.
- Highly humid places where dew condenses due to temperature fluctuations.
- Where salt air or splashing seawater contacts the product.
- In atmospheres containing corrosive gases, liquids and chemicals.
- Where the product is exposed to direct sunlight.

■ Pressure management

- Confirm primary pressure before setting.
- Pressure higher than the primary pressure cannot be set.
- Turn the pressure adjustment knob clockwise to increase the secondary pressure, and counterclockwise to lower the pressure. When adjusting the pressure, pull up the knob to check that the lock is not applied.
- Pressure is set in the depressurizing direction (high pressure → low pressure), enabling highly precise setting to be made.
- Lock the pressure adjustment knob after setting the pressure.
- Air constantly leaks from the bleed hole. This is necessary for precise pressure control, so do not plug the hole.
- When setting pressure, turn the secondary directional switching valve several times and confirm set pressure. Failure to confirm pressure could cause the set pressure to change significantly.
- The set pressure changes from the initial set point due to the working environment and conditions, as well as the aging of part materials. Check the pressure regularly, and reset if conditions have changed.

MEMO

70% less air consumption.

An eco-friendly, new type of precision regulator: the RPE Series.

Significant reduction in air consumption is achieved with the special structure (compared to CKD conventional products).
In addition, excellent control performance, high precision and compact size are also achieved.
Precise tension control, etc., can be used in various applications.

70% less air consumption

Air bleed is significantly reduced compared to CKD conventional products. (Comparing identical conditions at primary pressure 0.7 MPa)

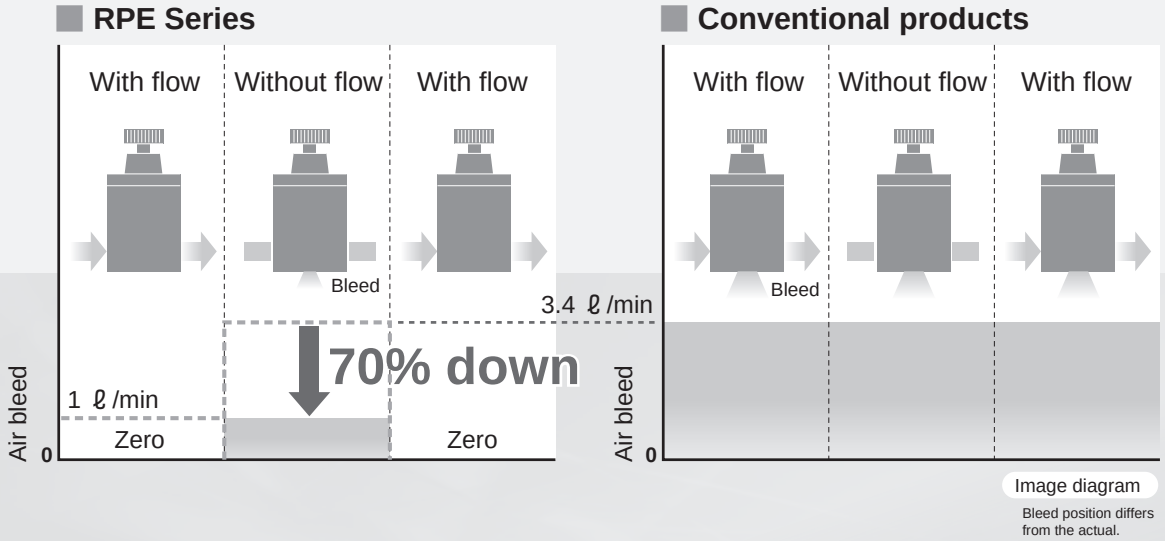

Image diagram
Bleed position differs from the actual.

High-precision pressure control

Repeatability: Within ±0.5% of full scale
Sensitivity: Within 0.2% of full scale

Compact □42 mm/lightweight 250 g

Aluminum materials used, compact/lightweight design.

Ozone-proof materials are used as standard in movable parts

Module type

Can be connected with C1000 Series filter and oil mist filter.

Fluid passage section grease-free specifications

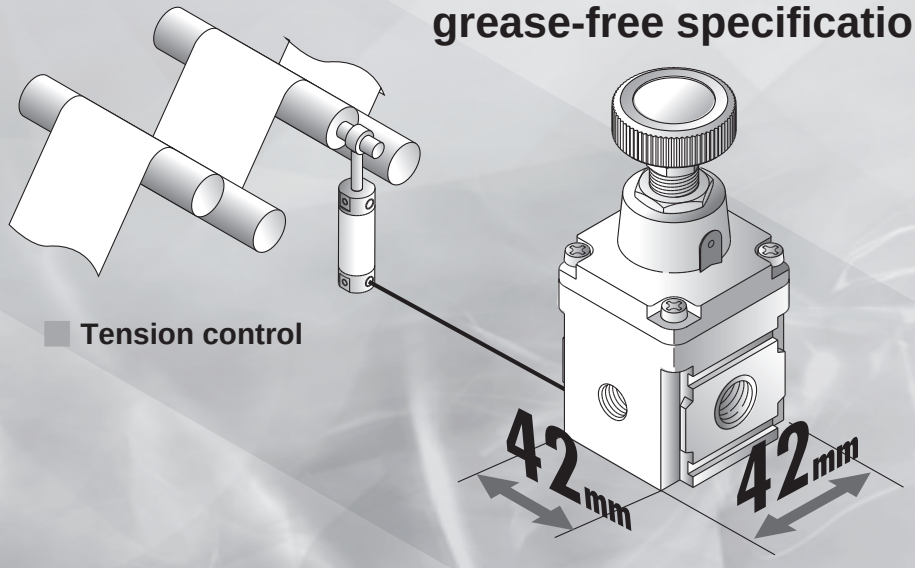

Tension control

Applications

Fluid discharge control

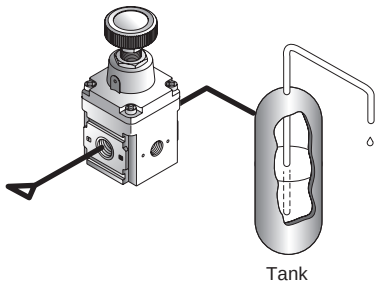

Balance

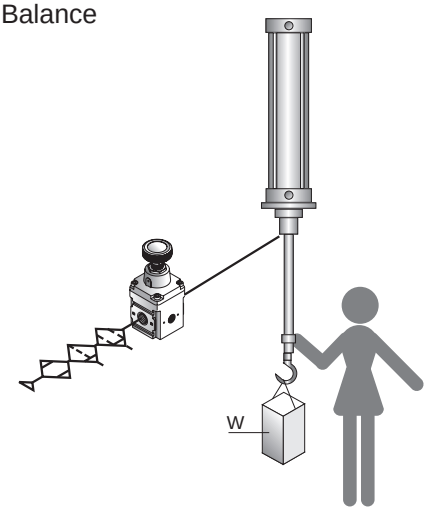

Pilot pressure control

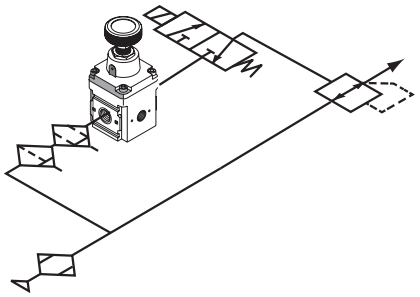

Very low pressure blow

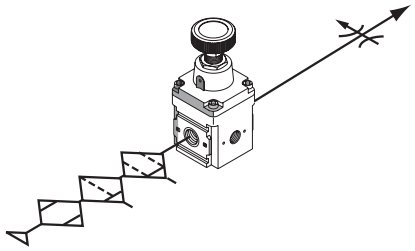

Quick pressure regulation of tank pressure

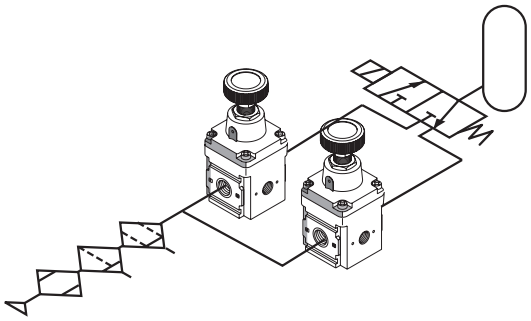

Leakage test

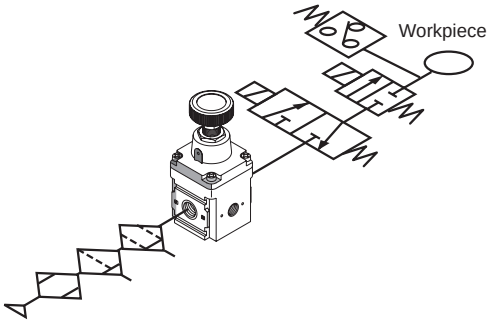

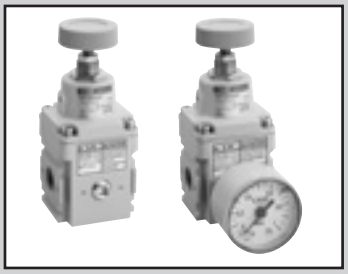

Precision regulator

RPE1000 Series

● Port size: 1/4

JIS symbol 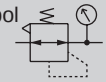

RoHS CAD

Specifications

Item	RPE1000-8-07
Working fluid	Compressed clean air (refer to recommended air circuit on page 514)
Max. working pressure MPa	1.0
Min. working pressure MPa	Set pressure +0.1 *1
Proof pressure MPa	1.5
Ambient/fluid temperatures °C	-5 to 60 (no freezing)
Set pressure MPa	0.01 to 0.7
Sensitivity	Within 0.2% of full scale
Repeatability	Within ±0.5% of full scale
Air consumption *2 ℓ/min (ANR)	0.2 or less
Port size *4 Rc, NPT, G	1/4
Pressure gage port size Rc, NPT, G	1/8
Weight g	250 *3

*1: Flow rate of the secondary side is to be zero.
*2: Conditions where the primary pressure is 0.7 MPa and air is consumed in the secondary side. Air is released to the atmosphere at 1 ℓ/min or less from EXH port when there is no air consumption.
*3: For weight when Ⓓ attachment is included, add the following weight. Pressure gauge: 74 g, bracket: 30 g
*4: When selecting G thread, the OUT side screw depth is 6 mm.

How to order

RPE1000 - 8 - ( ) - 07 - G10B3
(A) (B) (C) (D)

Model
RPE1000:
Precision regulator

Ⓐ Port size		Ⓑ Port thread/pressure indication		Ⓒ Set pressure range		Ⓓ Attachment (attachedwith)	
8	1/4	**Blank**	Rc thread, MPa display	**07**	MAX.0.7MPa	**Blank**	Without attachment
		N	NPT thread, psi display *4			**G02**	Pressure gauge (G45D-6-P02)
		G	G thread, bar display			**G04**	Pressure gauge (G45D-6-P04)
						G10	Pressure gauge (G45D-6-P10)
						B3	LModelBracket (B131)

*1: A pressure gauge and a bracket are enclosed.
*2: The pressure gauge range is to be selected.
Do not apply pressure exceeding the pressure gauge's MAX range.
*3: One plug (1/8) is included with the product. (G thread is not included.)
*4: In compliance with the Measurement Act, the psi display cannot be used in Japan.
*5: The pressure gauge and digital pressure sensor (included) can be selected only when Port thread is Rc thread.

Specifications for rechargeable battery (Catalog No. CC-1226A)

● Structure compatible with rechargeable battery manufacturing process

RPE1000 ..... **P4**

Flow characteristics

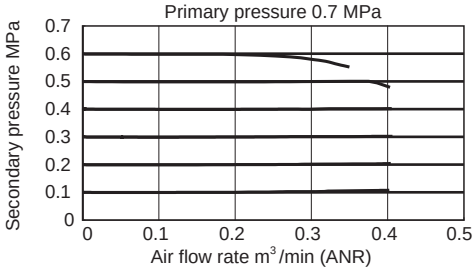

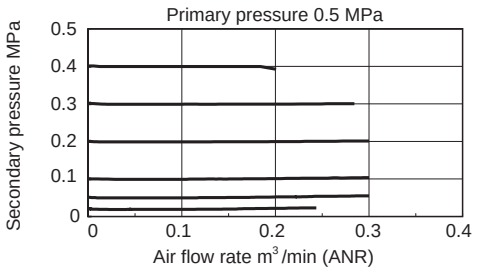

Relief flow characteristics

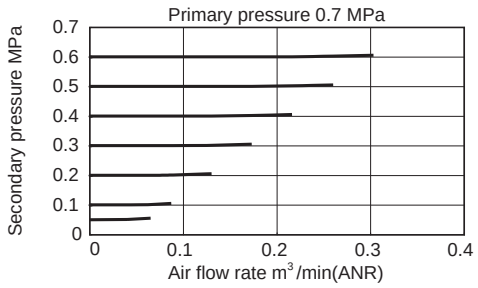

Pressure characteristics

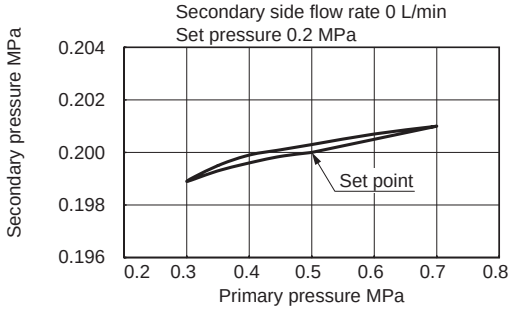

Internal structure diagram and parts list

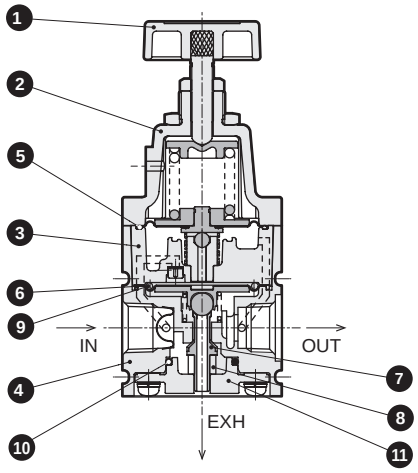

Part No.	Part name	Material
1	Pressure adjustment knob	Polyacetal resin, stainless steel
2	Cover	Aluminum alloy die-casting
3	Pilot body assembly	Aluminum alloy die-casting, etc.
4	Body	Aluminum alloy die-casting
5	Pilot diaphragm assembly	Hydrogenated nitrile rubber, zinc alloy die-casting
6	Main diaphragm assembly	Hydrogenated nitrile rubber, zinc alloy die-casting
7	Valve	Hydrogenated nitrile rubber, stainless steel
8	Bottom rubber	Silicone rubber
9	O-ring	Nitrile rubber
10	O-ring	Hydrogenated nitrile rubber
11	Bottom plug	Polybutylene terephthalate resin

Dimensions

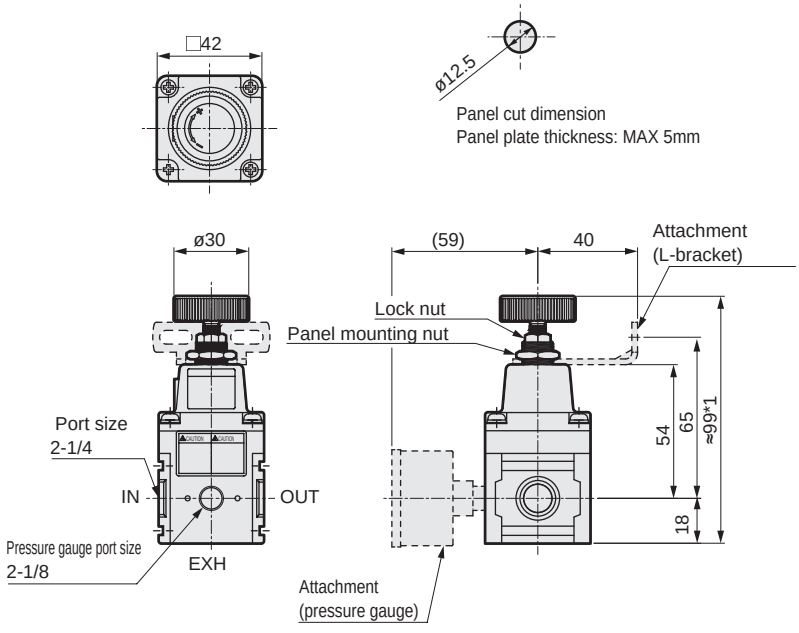

*1: Dimensions at the set pressure of 0MPa
*2: Pressure gage and bracket are included options.

Pressure gauge
・G45D-6- P02 P04 P10

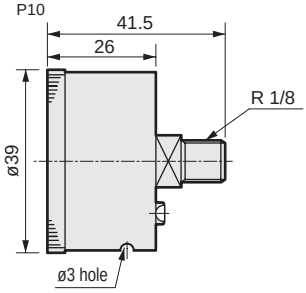

L-bracket
・B131
・Weight: 29 g
・Material: Steel
Nickel plated

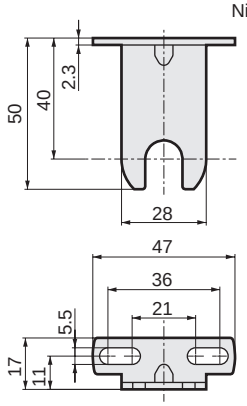

(Reference) Guideline for cylinder operation speed

Cylinder bore size (mm)	Recommended operation speed (mm/s)
ø40	500 or less
ø50	320 or less
ø63	200 or less
ø80	130 or less
ø100	80 or less

This is a guideline for operation speed obtained by calculating the air supply and exhaust flow rate of the precision regulator mounted directly to the cylinder and the required consumption flow rate at one cylinder PUSH/PULL. Using at a higher capacity than the capacity of the precision regulator may cause malfunctions.

Safety Precautions

Be sure to read this section before use.
Refer to Intro Page 63 for precautions for general pneumatic components.

Product-specific cautions: Precision regulator RPE1000 Series

Design/selection

⚠ WARNING

■ Use the product in the range of conditions specified for the product. ■ Working fluid must be clean air from which solids, water and oil have been sufficiently removed using an air dryer, filter and oil mist filter. Never supply oiled air.
As well, when secondary side pressure, etc., is turned OFF, air on the secondary side will pass through the regulator and be discharged from the EXH port. Thus, if secondary piping or load side interior is dirty, malfunction, characteristics deterioration, etc., may occur. Keep the inside of the pipes clean.

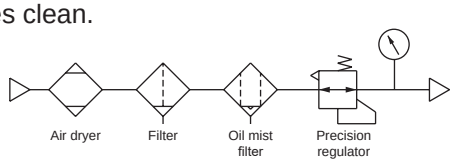

⚠ CAUTION

■ Keep the pressure difference between the primary and secondary sides to 0.1 MPa or more.
Depending on the circuit used and usage conditions, pulsation or noise may occur due to the resonance of the airflow (especially when blowing air). In this case, increase the secondary side capacity or use the primary pressure as low as possible.

■ Pulsation may occur when capacity is insufficient, such as when a switch valve is installed directly to the secondary side of the regulator. In such a case, increase the secondary side capacity of the regulator for use.

■ If the regulator is repeatedly turned ON and OFF with the directional switching valve on the primary side, the set pressure may change greatly. Thus, the directional switching valve should be installed on the secondary side.

■ Output pressure exceeding the regulator's set pressure could result in damage or faulty operation of the secondary side devices. Be sure to install a safety device.

■ Do not operate the pressure adjustment knob while the primary side is released to the atmosphere, as performance could deteriorate.

■ Select the RP2000 Series if the maximum flow rate of the regulator exceeds the maximum relief flow rate.

■ Each product has an O-ring groove for modular connection on its OUT side. Select piping that can be sealed at or below the O-ring groove diameter.

Series	RPE1000
Groove diameter	ø17.6

Mounting, installation and adjustment

⚠ CAUTION

■ Check IN and OUT indications indicating the air inlet and outlet before connecting. A reverse connection could result in improper operation. ■ Do not move or swing the product by the pressure adjustment knob.

■ Do not install this product in a location where it may be subject to vibrations or shocks.

■ Flush air pipes before connecting the regulator.

■ Use sealing tape when piping. Do not use liquid and solid sealant. In addition, ensure that the sealing tape does not enter.

■ When using in parallel as shown at left, do not use the secondary side as a closed circuit. If a closed circuit is required, be sure to set a check valve on the respective secondary sides.

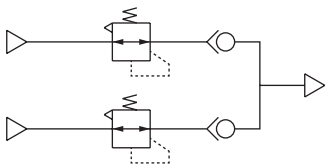

■ Install so that the EXH port is not plugged.

■ When installing on a panel, completely loosen and remove the pressure adjustment knob, insert the body into the ø12.5 panel hole, and fix it to the panel with the panel mounting nut. Then turn the pressure adjustment knob to attach it to the body. Panel mounting nut recommended tightening torque 2 to 3N·m

■ Use appropriate torque to tighten the pipes when connecting them.
- The purpose is to prevent air leakage and damage to bolts.
- First tighten the bolts by hand to ensure that the threads are not damaged, then use a tool.

[Recommended values]

Port thread	Tightening torque N·m
Rc1/8	3 to 5
Rc1/4	6 to 8

During use/maintenance

⚠CAUTION

■ Working fluid

- Use only compressed air. Air containing corrosive gases, fluids or chemicals could result in improper pressure adjustment due to body damage or rubber deterioration.

■ Environment

This product is an indoor use this product in the following environments.

- When ambient temperature exceeds the range of -5 to 60˚C.
- Where air freezes.
- Places where the unit will be exposed to dripping water and/or coolant.
- Highly humid places where dew condenses due to temperature fluctuations.
- Where salt air or splashing seawater contacts the product.
- In atmospheres containing corrosive gases, liquids and chemicals.
- Where the product is exposed to direct sunlight.
- Locations with vibration or impact.
- Locations where the surroundings are very dusty.

■ When using the product

- When there is no air consumption in the secondary side, air is released from the EXH port. As this is necessary for precise pressure control, do not block the EXH port. Air 1 ℓ/min or less is released into the atmosphere from the EXH port.
- Check primary pressure before setting pressure.
- Pressure higher than the primary pressure cannot be set.
- Turn the pressure adjustment knob clockwise to increase secondary pressure, and counterclockwise to lower pressure.
- After adjusting the pressure, tighten the lock nut, and then set the pressure adjustment knob.
- Since the set pressure also changes due to the changes in the ambient environment temperature, using at a constant temperature is recommended.
- Due to the product structure, the secondary side pressure may not be 0 MPa even if the pressure adjustment knob is completely loosened.

■ Maintenance

- Pneumatic components must be disassembled and assembled by qualified personnel.
- Pneumatic Pressure Skill Test Class 2 or higher level is required.
- Read the relevant product instruction manual thoroughly and fully familiarize yourself with the task before disassembling or assembling pneumatic components.
- Personnel must be fully familiar with pneumatic component structure and operational principles and safety requirements.
- Before conducting maintenance, turn the power OFF, stop the supply of pressure and make sure that there is no residual pressure.

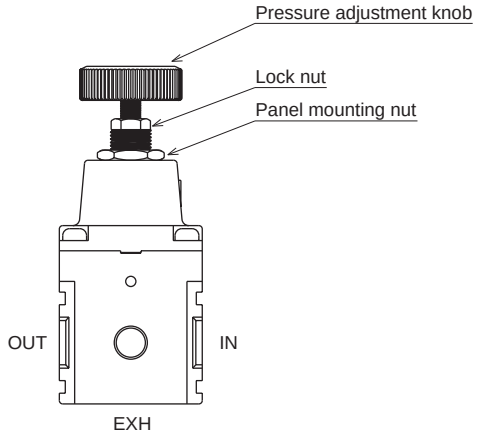

Outstanding performance in low and extremely low pressure ranges from 0.003 to 0.1 MPa.

Realizing high performance, energy saving, and compact size. Enables precise pressure control in a pressure range of 0.003 to 0.4 MPa.

Pilot pressure control with a nozzle flapper enables highly precise, stable precise pressure control in a setting pressure range between 0.003 to 0.4 MPa. Control performance is especially outstanding in extremely low to low pressure ranges between 0.003 and 0.1 MPa. The relief flow rate is high even with the □42 mm compact size. This energy saving type also has low air consumption.

High precision pressure control

Regardless of the flow rate, pressure control is performed with repeatability within ±0.5% of full scale and sensitivity within 0.1% of full scale.

Set extremely low pressures

Pressure as low as 0.003 MPa can be set (RP1000-8-02).

High relief flow rate

Energy saving with low air consumption

Stable flow characteristics with small pressure drop

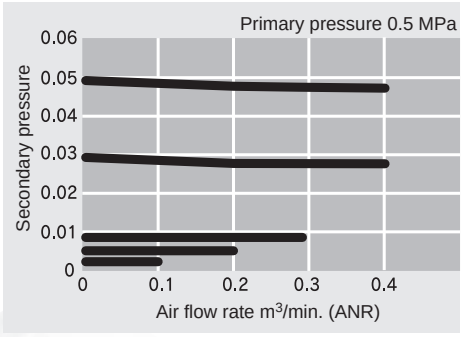

■ **Pressure control**

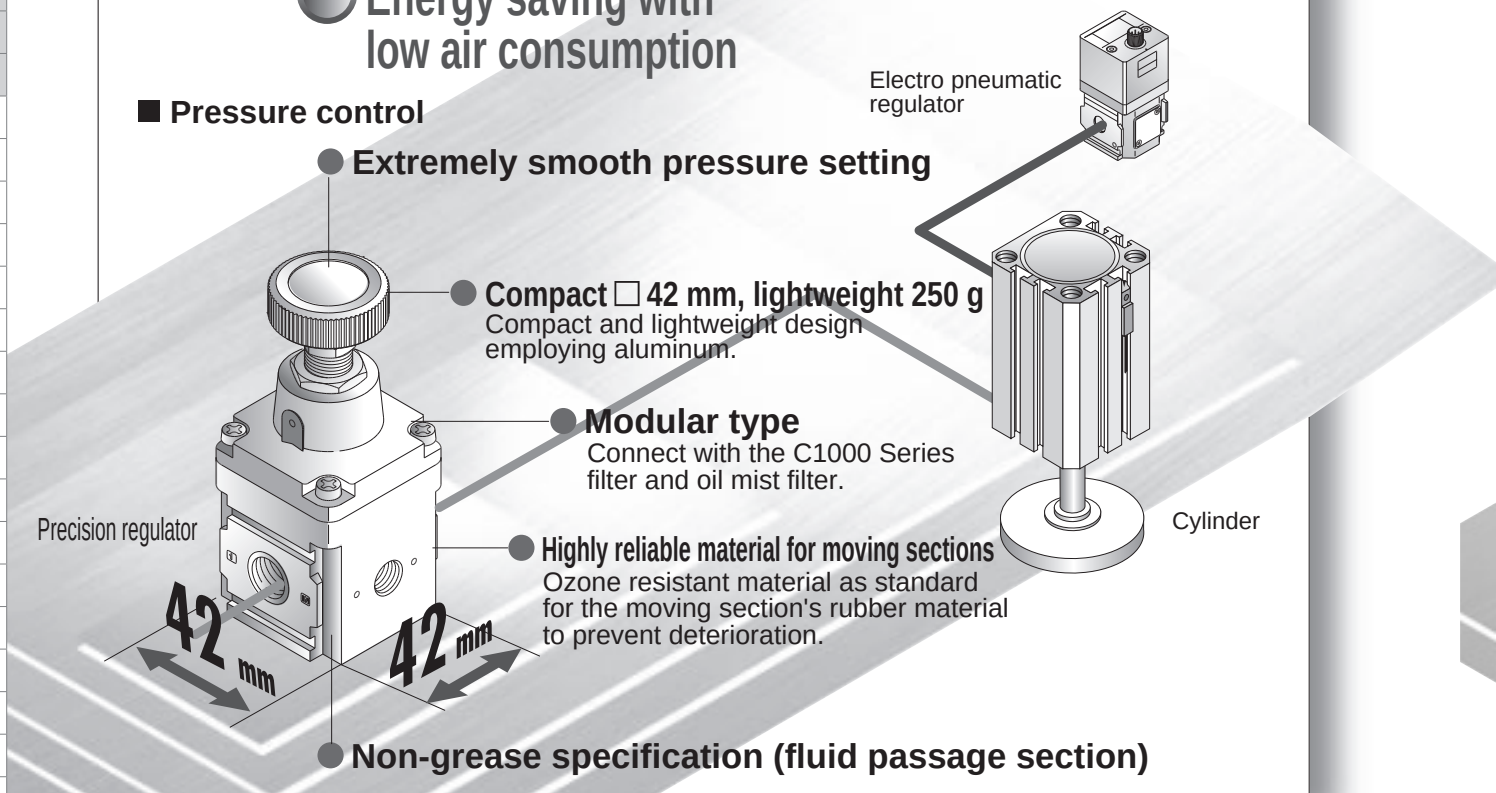

High performance, energy saving, compact

RP1000 Series

CKD

Pressure setting: Max. 0.85 MPa

Long-life, high flow perfect for balancer applications.

Realizing high performance, long service, and high exhaust flow.
Enables precise pressure control in a pressure range of 0.03 to 0.85 MPa.

The RP2000 Series incorporates pilot pressure control using a nozzle flapper similar to the 1000 Series. However, this □50 mm compact high exhaust flow rate has high relief. Low sliding packing is used for moving parts, extending parts life. This type has outstanding durability and sufficient supply/discharge at optimum high frequency and high response required for devices such as balancers.

High precision pressure control

Regardless of the flow rate, pressure control is performed with repeatability within ±0.5% of full scale and sensitivity within 0.2% of full scale.

● Cylinder bore size and corresponding speed (guide)

ø 80	1000 mm/s
ø 100	900 mm/s
ø 125	600 mm/s

□50 mm/470 g

Compact aluminum body with high flow rate.

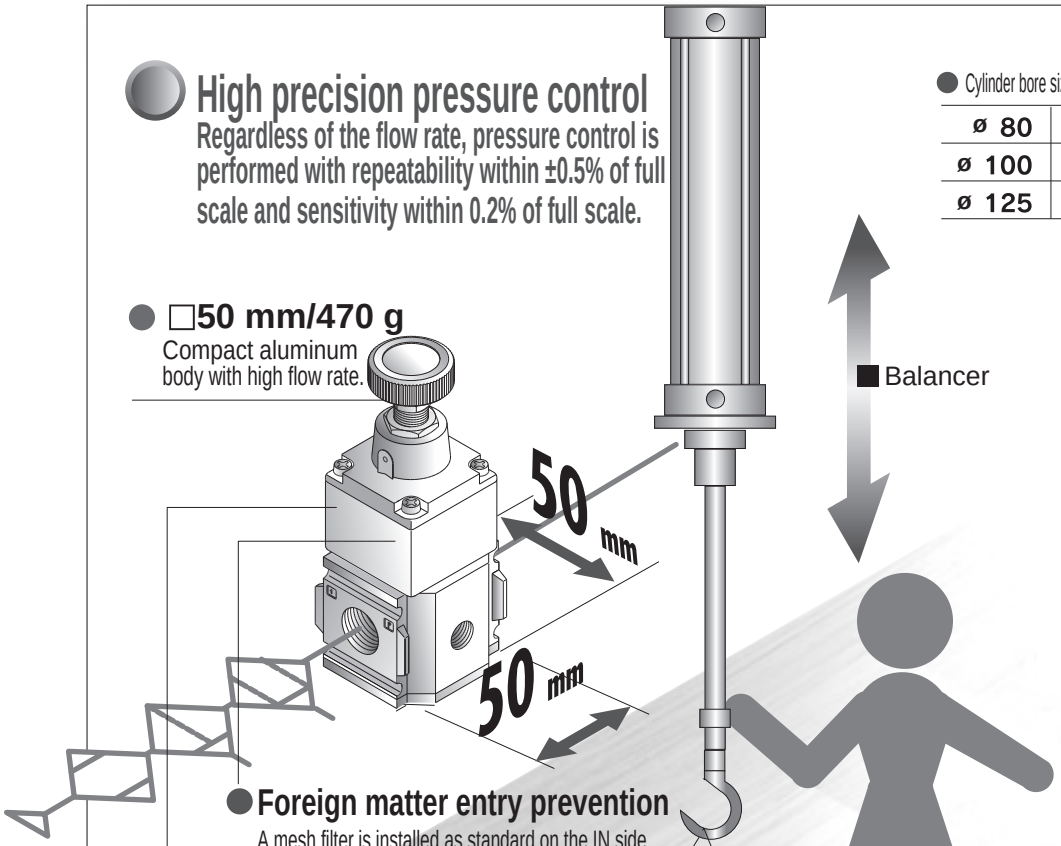

Foreign matter entry prevention

A mesh filter is installed as standard on the IN side.

Modular type

Connect with the C3000 and C4000 Series filter and oil mist filter.

Long service life

Low sliding packing is adopted for moving sections, and dry resistant grease is used.

Stable flow characteristics with small pressure drop

High relief flow rate

High performance, long service life, and high exhaust flow rate

RP2000 Series



Precision regulator

RP1000 Series

● Port size: 1/4

JIS symbol 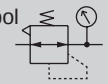

RoHS CAD

Specifications

Item	RP1000-8-02	RP1000-8-04	RP1000−8−07
Working fluid	Compressed clean air (refer to recommended air circuit on page 527)		
Max. working pressure MPa	1.0		
Min. working pressure MPa	Set pressure +0.1 *1		
Proof pressure MPa	1.5		
Ambient/fluid temperatures °C	-5 to 60 (no freezing) *3		
Set pressure MPa	0.003 to 0.2	0.005 to 0.4	0.005 to 0.7
Sensitivity	Within 0.1% of full scale		
Repeatability	Within ±0.5% of full scale		
Air consumption *2 l/min(ANR)	1.3 or less		3.4 or less
Port size *4 Rc, NPT, G	1/4		
Pressure gage port size Rc, NPT, G	1/8		
Weight g	250		

*1: Flow rate of the secondary side is to be zero. For RP1000-8-04, if the set pressure is 0.3 MPa and over, increase +0.2 MPa in the set pressure.
*2: Conditions where the primary pressure is 0.7MPa. Air is released to the atmosphere normally.
*3: -5 to 50°C when using a digital pressure sensor.
*4: When selecting G thread, the OUT side screw depth is 6 mm.

How to order

RP1000 - 8 - ( ) - 02 - G49PB3
(A) (B) (C) (D)

Model
RP1000: Precision regulator

Ⓐ Port size		Ⓑ Port thread/pressure indication		Ⓒ Set pressure range		Ⓓ Attachment (attachedwith)	
8	1/4	**Blank**	Rc thread, MPa display	**02**	MAX.0.2MPa	**Blank**	Without attachment
		N	NPT thread, psi display *4	**04**	MAX.0.4MPa	**G49P**	Pressure gauge (G49D-6-❑)
		G	G thread, bar display	**07**	Max. 0.7 MPa	**B3**	L-bracket
						R 2	Digital pressure sensor

*1: A pressure gauge, a digital pressure sensor and a bracket are attached.
*2: A pressure gauge with the same pressure range as the regulator is attached.
*3: One 1/8 plug is attached with the product...(G thread is not included.)
*4: In compliance with the Measurement Act, the psi display cannot be used in Japan.
*5: The pressure gauge and digital pressure sensor (included) can be selected only when Port thread is Rc thread.

Discrete attachment model No.

Model	Discrete attachment model No.
RP1000-8-02-G49P	G49D-6-P02
RP1000-8-04-G49P	G49D-6-P04
RP1000-8-07-G49P	G49D-6-P10
RP1000-8-$^{02}_{04}_{07}$ -B3	B131
RP1000-8-$^{02}_{04}_{07}$ -R2	PPX-R10N-6M

Clean-room specifications (Catalog No. CB-033SA)

● Anti-dust generation structure for use in cleanrooms

RP1000-.....- **P70**

Internal structure and parts list

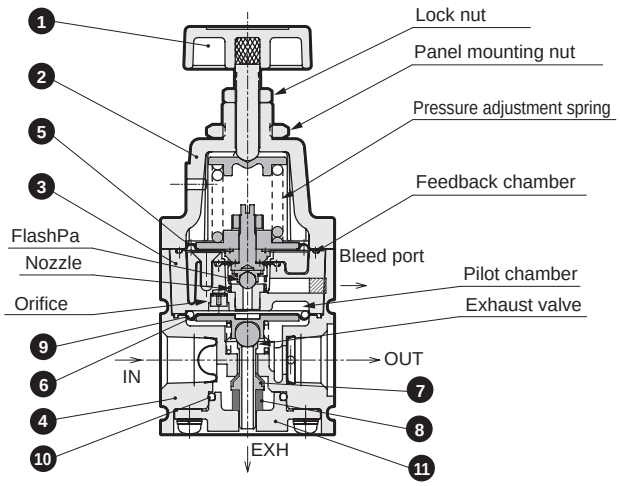

Part No.	Part name	Material
1	Pressure adjustment knob	PolyacetalResin, stainless steel
2	Cover	Aluminum alloy die-casting
3	Pilot body assembly	Aluminum alloy die-casting, etc.
4	Body	Aluminum alloy die-casting
5	Pilot diaphragm	Hydrogenated nitrile rubber
6	Main diaphragm	Hydrogenated nitrile rubber
7	Valve	Hydrogenated nitrile rubber,Stainless steel
8	Bottom rubber	Silicone rubber
9	O-ring	Nitrile rubber
10	O-ring	Hydrogenated nitrile rubber
11	Bottom plug	Polybutylene terephthalate resin

Operational explanation

Air supplied from the IN side is prevented from flowing to the OUT side by the ❼valve. Some supplied air passes through the orifice to flow into the pilot chamber. When the ❶pressure adjustment knob is rotated, the pressure adjustment spring is compressed, and the ❺pilot diaphragm and the flapper are pushed down to close the nozzle. If the pressure in the pilot chamber rises, the ❻main diaphragm is forced lower to open the ❼valve, and to supply air to the OUT side. The intake air flows into the feedback chamber, and works on the ❺pilot diaphragm. If the diaphragm is forced upward until the air reaches the pressure of the regulator spring, the ❺pilot diaphragm and flapper are forced upward to open the nozzle, and an extremely small amount of air is released to the atmosphere to reduce pressure in the pilot chamber. At the same time, the OUT side pressure works on the ❻main diaphragm to force it upward, and the ❼valve is closed and the set pressure is maintained. When the air is consumed and the pressure drops on the OUT side, the pressure in the feedback chamber also drops. The ❺pilot diaphragm and the flapper are forced lower to close the nozzle. Pressure in the pilot chamber rises, causing the ❻main diaphragm to operate and open the ❼valve, compensating for any drop in pressure. If the OUT side pressure increases further than the set pressure, the pressure in the feedback chamber also increases. The ❺pilot diaphragm and the flapper are forced upward to open the nozzle. This allows the pressure in the pilot chamber to decrease, and the ❻main diaphragm is forced upward to open the exhaust valve, and the surplus pressure is exhausted from EXH port in OUT side to the atmosphere. This pilot pressure control method using the nozzle and flapper can follow up a minimal pressure change, which enables the high precision pressure control.

Consumable parts list

For 0.2 and 0.4 MPa

Model No.	Part No.
RP1000-PILOT-ASSY	❸, ❺
RP1000-DIAPHRAGM-ASSY	❻, ❾
RP1000-VALVE-ASSY	❼, ❽ ❿

For 0.7 MPa

Model No.	Part No.
RP1000-PILOT-ASSY-07	❸, ❺
RP1000-DIAPHRAGM-ASSY-07	❻, ❾
RP1000-VALVE-ASSY-07	❼, ❽ ❿

Dimensions CAD

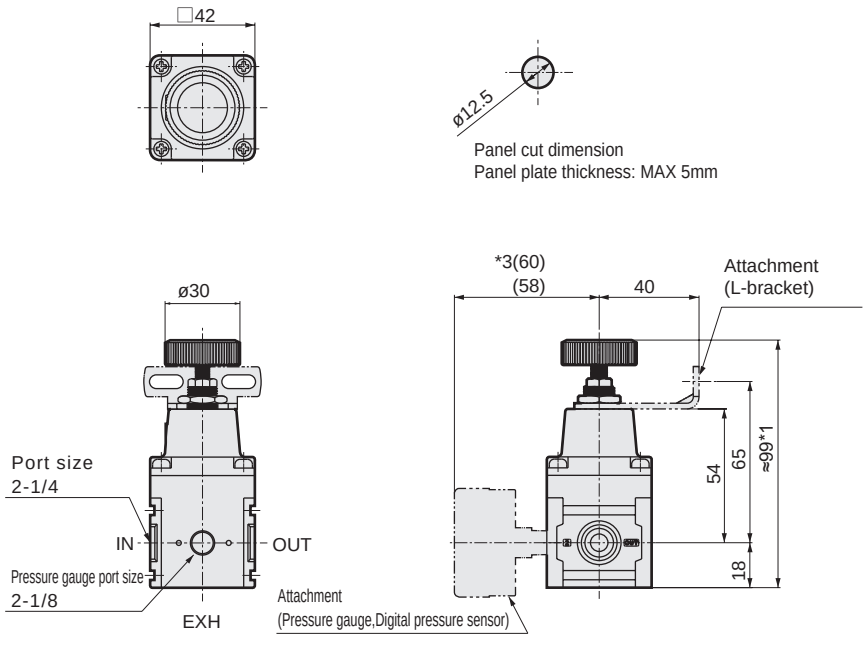

*1: Dimensions at the set pressure of 0MPa
*2: A pressure gauge, a digital pressure sensor and a bracket are included options.
*3: Dimensions when the digital pressure sensor is assembled.

Pressure gauge
• G49D-6- P02 P04 P10
Weight: 86 g

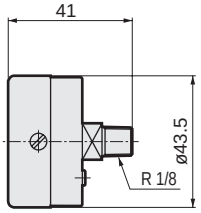

L-bracket
• B131
Weight: 29 g
Material:Steel
Nickel plated

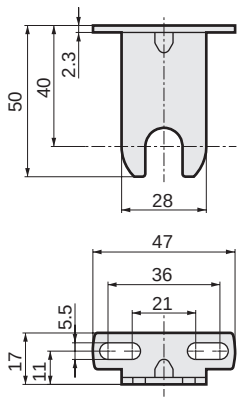

Dimensions

● PPX-R10N-6M

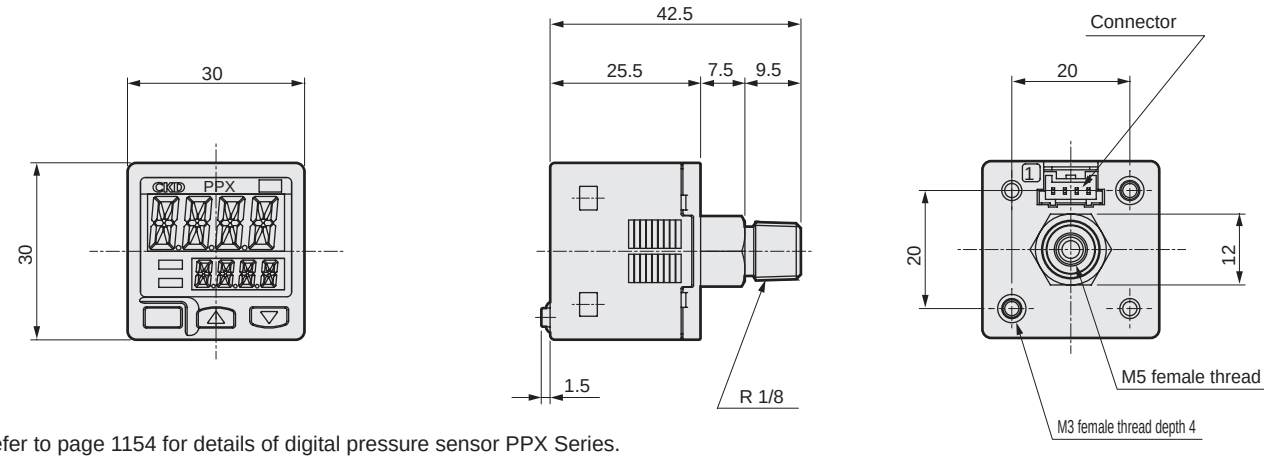

Note: Refer to page 1154 for details of digital pressure sensor PPX Series.

Weight: 40 g

Flow characteristics

● RP1000-8-07

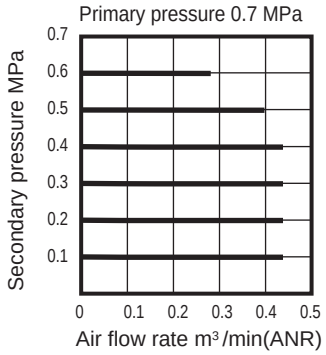

● RP1000-8-04

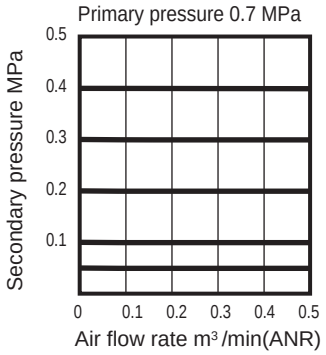

● RP1000-8-02

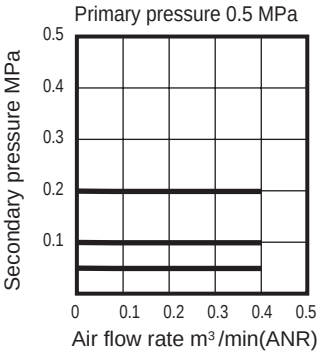

● RP1000-8-02
(Flow characteristics at low pressure)

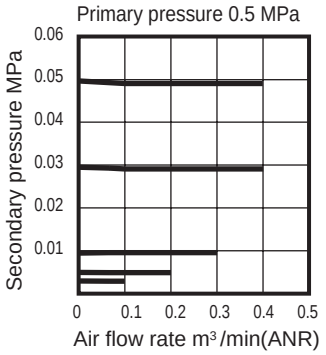

Relief flow characteristics

● RP1000-8-07

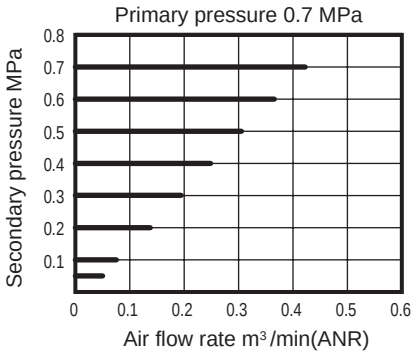

● RP1000-8-04

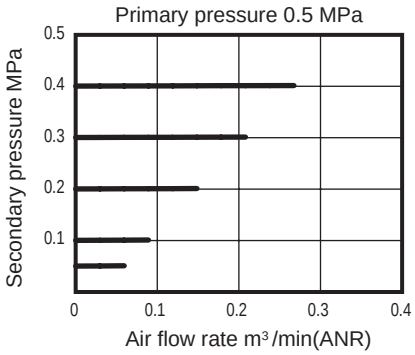

● RP1000-8-02

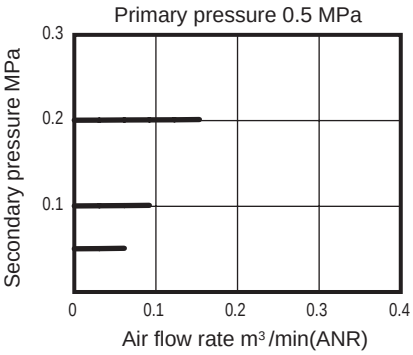

Pressure characteristics

● RP1000-8-07

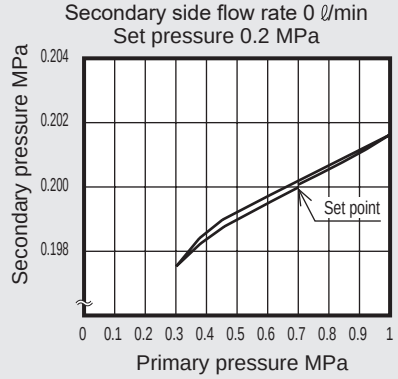

● RP1000-8-04

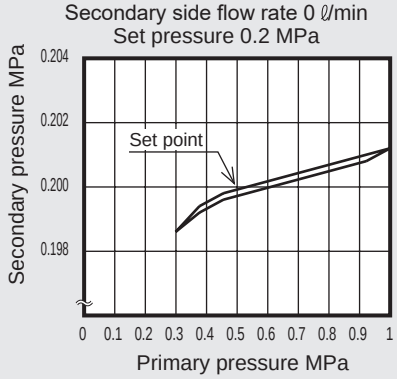

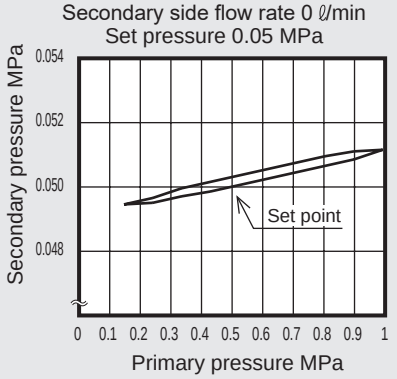

Pressure characteristics

● RP1000-8-02

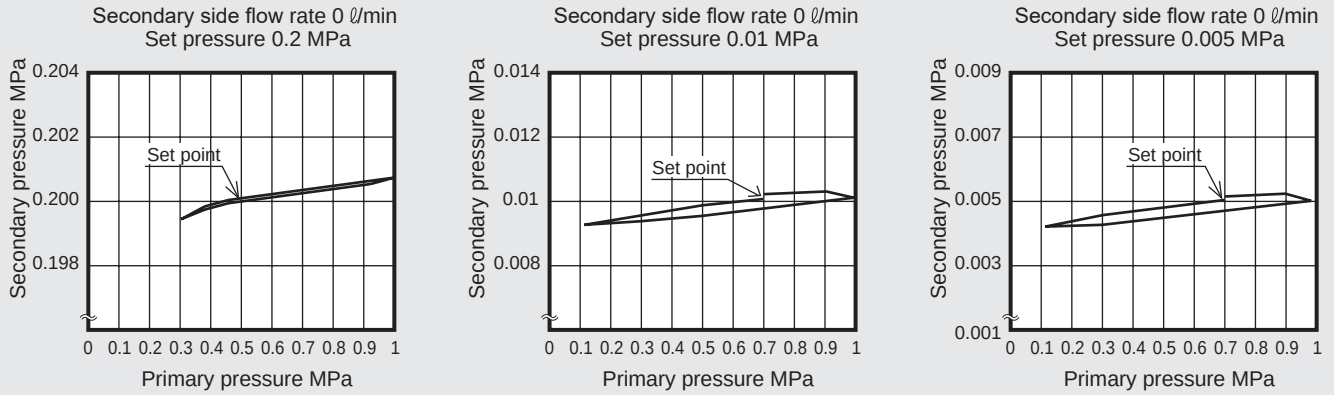

Cylinder speed range of RP1000

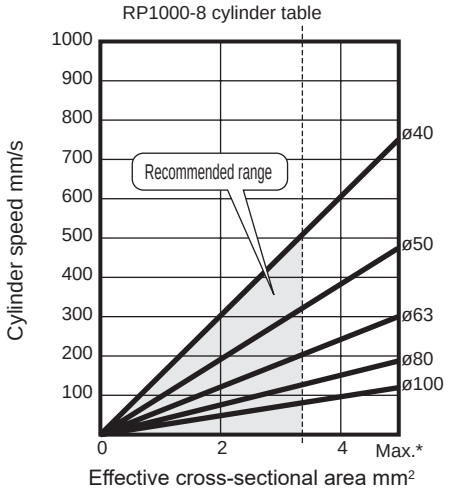

This cylinder table shows the available range according to the air supply and exhaust flow rate of the precision regulator and the required consumption flow rate at the cylinder PUSH/PULL.

------- Recommended cylinder line
(70% of max. flow rate is recommended)

* Max. cylinder line
(Cylinder directly installed)

Note: Using at a speed higher than the maximum could cause relief malfunctions.

Example of precise pressure control system

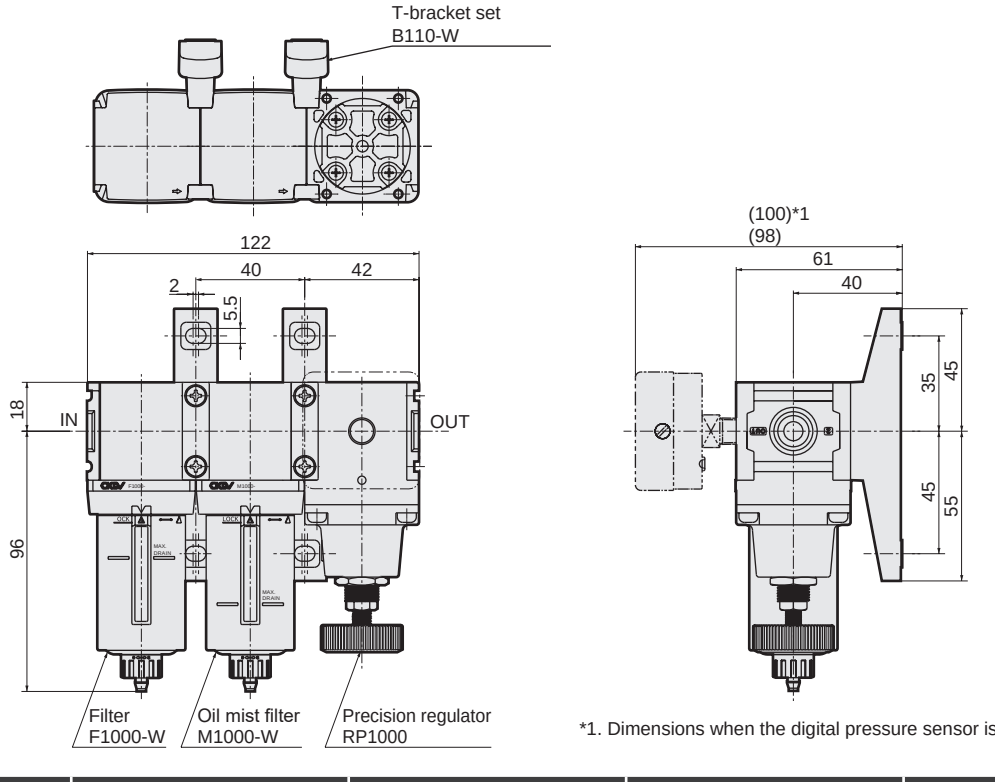

*1. Dimensions when the digital pressure sensor is assembled.

Compatible model	Filter	Oil mist filter	Precision regulator	T-bracket set
Product model No.	F1000-W	M1000-W	RP1000	B110-W (2 pcs.)

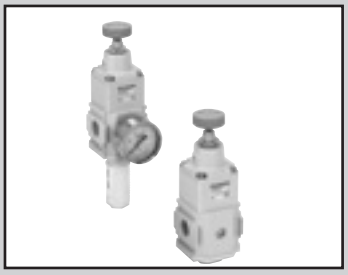

Precision regulator

RP2000 Series

● Port size: 1/4 3/8

JIS symbol 

RoHS CAD

Specifications

Item	RP2000-8-08	RP2000-10-08
Working fluid	Compressed clean air (refer to recommended air circuit on page 527)	
Max. working pressure MPa	1.0	
Min. working pressure MPa	Set pressure +0.1 *1	
Proof pressure MPa	1.5	
Ambient/fluid temperatures °C	-5 to 60 (no freezing) *3	
Set pressure MPa	0.03 to 0.85	
Sensitivity	Within 0.2% of full scale	
Repeatability	Within ±0.5% of full scale	
Air consumption /min (ANR) ℓ	5 or less *2	
Port size	Rc1/4	Rc3/8
Exhaust side port size Rc, NPT, G	3/8	
Pressure gage port size Rc, NPT, G	1/8	
Weight g	470	

*1: Flow rate of the secondary side is to be zero.
*2: Conditions where the primary pressure is 0.7 MPa and set pressure is 0.3 MPa. Consumed air is normally released to the atmosphere from the bleed port and EXH port. So, air consumption is the total of consumption volume released from the bleed port and EXH port. Air 1 ℓ/min. (ANR) or less is released from EXH port.
*3: The range is -5 to 50°C when a digital pressure sensor is used.

How to order

RP2000 - 8 (A) - ( ) (B) - 08 (C) - G49PBE (D)

Model
RP2000: Precision regulator

A Port size		B Port thread/pressure indication		C Set pressure range		D Attachment	
8	1/4	**Blank**	Rc thread, MPa display	**08**	MAX.0.85MPa	**Blank**	Without attachment
10	3/8	**N**	NPT thread, psi display *5			**G49P**	Pressure gauge
		G	G thread, bar display			**B**	C-bracket
						E	Silencer
						R 2	Digital pressure sensor

1: If a 1/2 port size is required, use a piping adapter set (model No.: A400-15-W).
*2: Attachment is included.
*3: The pipe adaptor set and C-bracket cannot be used together.
*4: One 1/8 plug is included with the product. (G thread is not included.)
*5: In compliance with the Measurement Act, the psi display cannot be used in Japan.
*6: The pressure gauge, silencer and digital pressure sensor (included) can be selected only when Port thread is Rc thread.

Discrete attachment model No.

Attachment code	Discrete attachment model No.
G49P	G49D-6-P10
B	B220
E	SLW-10A
R 2	PPX-R10N-6M

Clean-room specifications (Catalog No.CB-033SA)

● Anti-dust generation structure for use in cleanrooms

RP2000 - ..... - **P70**

Specifications for rechargeable battery (Catalog No. CC-1226A)

● Design compatible with rechargeable battery manufacturing process

RP2000-..... - **P4***

Internal structure and parts list

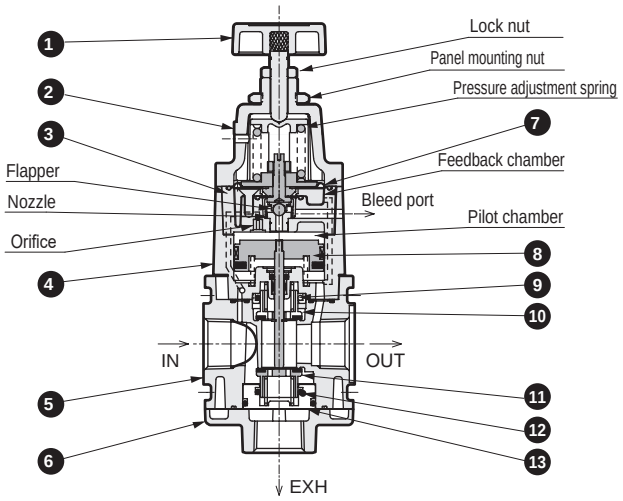

Part No.	Part name	Material
1	Pressure adjustment knob	Polyacetal resin, stainless steel
2	Cover	Aluminum alloy die-casting
3	Pilot body assembly	Aluminum alloy die-casting, etc.
4	Top body assembly	Aluminum alloy die-casting, etc.
5	Body	Aluminum alloy die-casting
6	Exhaust adaptor	Aluminum alloy die-casting
7	Pilot diaphragm	Hydrogenated nitrile rubber
8	Piston assembly	Aluminum, stainless steel, etc.
9	O-ring	Nitrile rubber
10	Exhaust valve	Brass, hydrogenated nitrile rubber
11	Air supply valve	Brass, hydrogenated nitrile rubber
12	O-ring	Nitrile rubber
13	Bottom cap	Brass

Operational explanation

Air supplied from IN side is stopped its flow to OUT side by the air supply valve. Some supplied air passes through the orifice to flow into the pilot chamber. When the ❶ pressure adjustment knob is rotated, the pressure adjustment spring is compressed, and the ❼ pilot diaphragm and the flapper are pushed down to close the nozzle. Pressure in the pilot chamber rises, forcing the piston lower to open the ⓫ air supply valve, and to supply air to OUT side. The intake air flows into the feedback chamber, and works on the ❼ pilot diaphragm. If the diaphragm is forced upward until the air reaches the pressure of the regulator spring, the ❼ pilot diaphragm and flapper are forced upward to open the nozzle, and an extremely small amount of air is released to the atmosphere to reduce pressure in the pilot chamber. At the same time, the OUT side pressure works on the piston to force it upward, the ⓫ air supply valve is closed and the set pressure is maintained. When the air is consumed and the pressure drops on the OUT side, the pressure in the feedback chamber also drops. The ❼ pilot diaphragm and the flapper are forced lower to close the nozzle. Pressure in the pilot chamber rises, causing the piston to open the ⓫ air supply valve, compensating for any drop in pressure. If the OUT side pressure increases further than the set pressure, the pressure in the feedback chamber also increases. The ❼ pilot diaphragm and the flapper are forced upward to open the nozzle. This allows the pressure in the pilot chamber to decrease, and the piston is forced upward to open the ⓾ exhaust valve; the surplus pressure is pumped from EXH port on the OUT side to the atmosphere. This pilot pressure control method using the nozzle and flapper can follow up a minimal pressure change, which enables the high precision pressure control.

Consumable parts list

Part No.	Part name	Model No.
3	Pilot body assembly	RP2000-PILOT-ASSY
7	Pilot diaphragm	
4	Top body assembly	RP2000-TOP-BODY-ASSY
11	Air supply valve	RP2000-BTM-VALVE-ASSY
12	O-ring	
13	Bottom cap	

Note: Parts No. (8) , (9), (10) are contained in the top body assembly (4)

Dimensions CAD

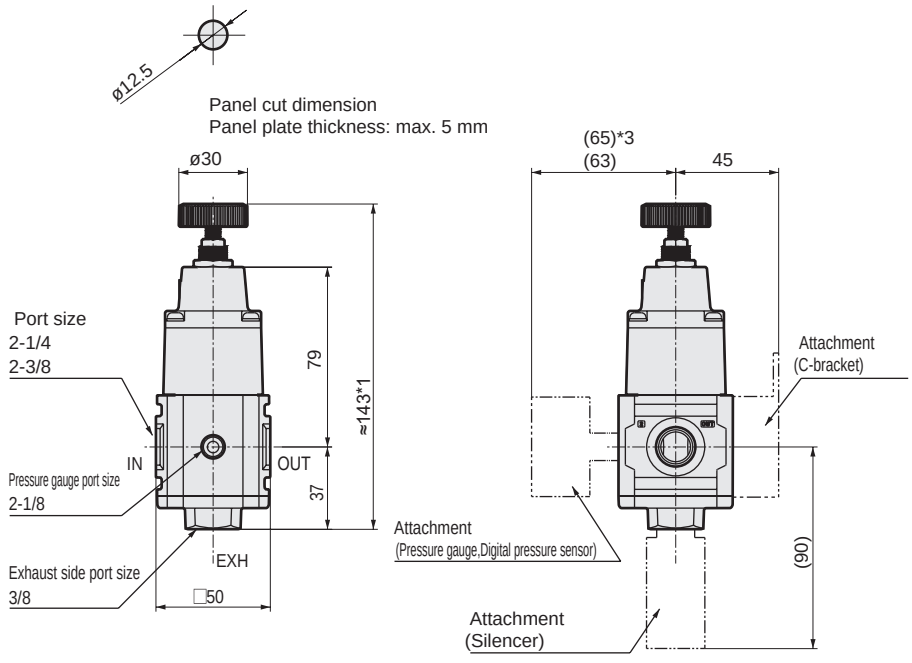

C-bracket
• B220
Weight: 150g
Material:
Steel
Zinc
plated

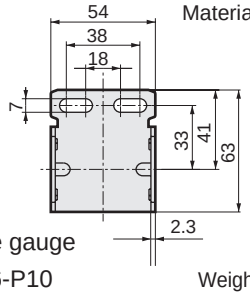

Pressure gauge
• G49D-6-P10
Weight: 86 g

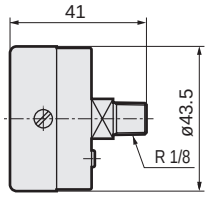

Silencer
• SLW-10A
Weight: 15 g

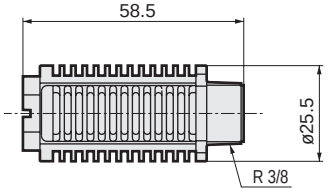

*1: Dimensions at the setting pressure of 0 MPa
*2: Pressure gauge, digital pressure sensor, C-bracket and silencer are optionally included.
*3. Dimensions when the digital pressure sensor is assembled.

dimensions

● PPX-R10N-6M

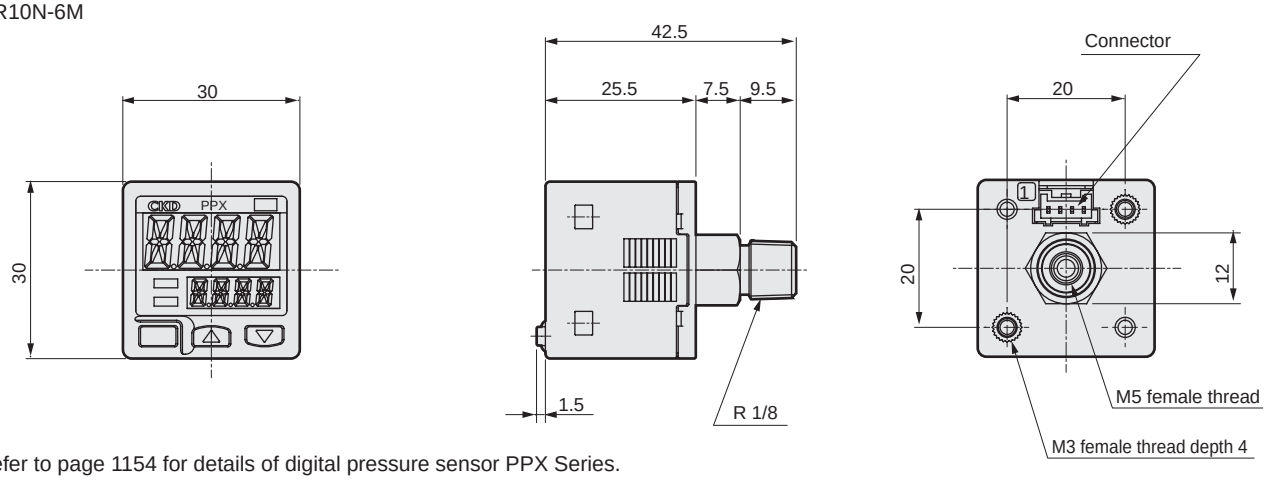

Note: Refer to page 1154 for details of digital pressure sensor PPX Series.

Weight: 40 g

Flow characteristics

● RP2000-10-08

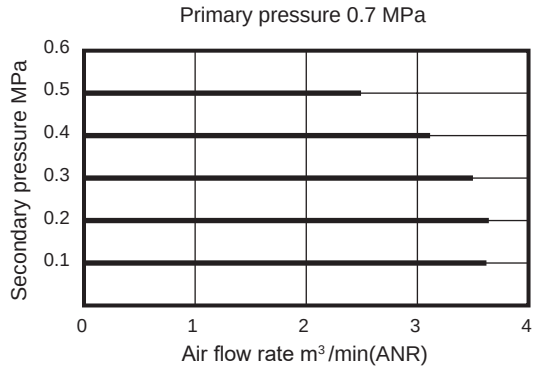

● RP2000-8-08

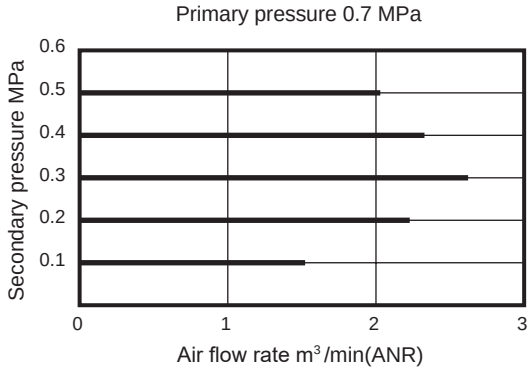

Relief flow characteristics

● RP2000-10-08

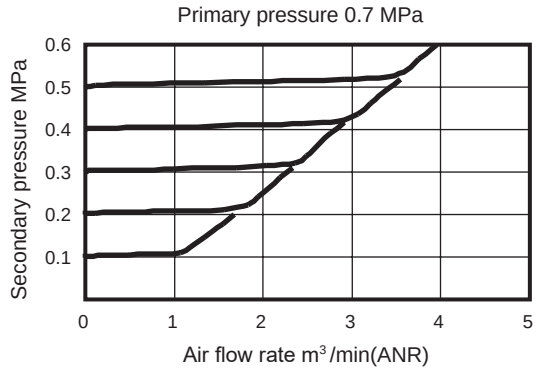

● RP2000-8-08

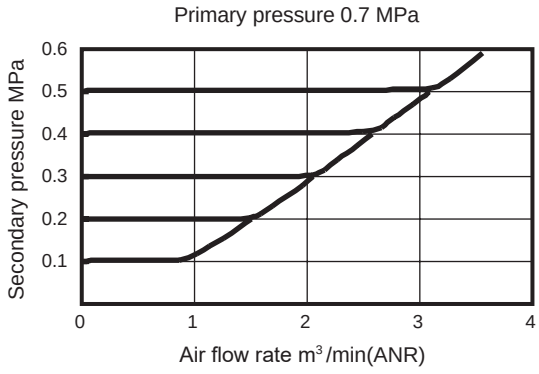

Pressure characteristics

● RP2000-*-08

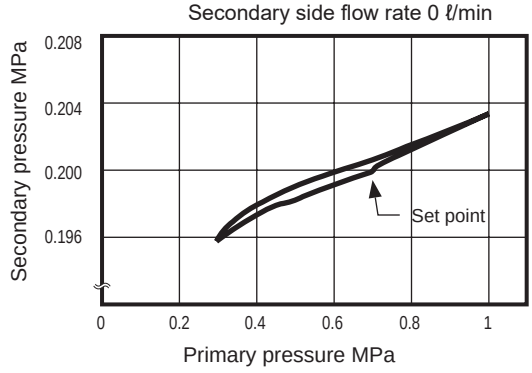

Cylinder speed range of RP2000

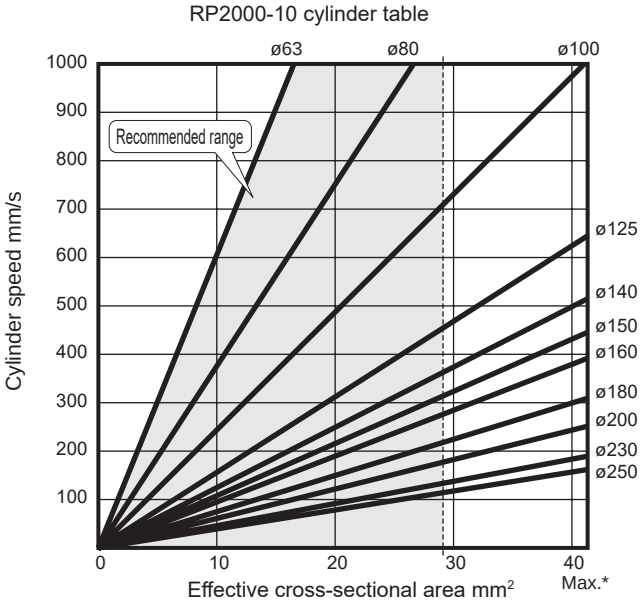

This cylinder table shows the available range according to the air supply and exhaust flow rate of the precision regulator and the required consumption flow rate at the cylinder PUSH/PULL.

------- Recommended cylinder line
(70% of max. flow rate is recommended)

* Max. cylinder line
(Cylinder directly installed)

Example of precise pressure control system

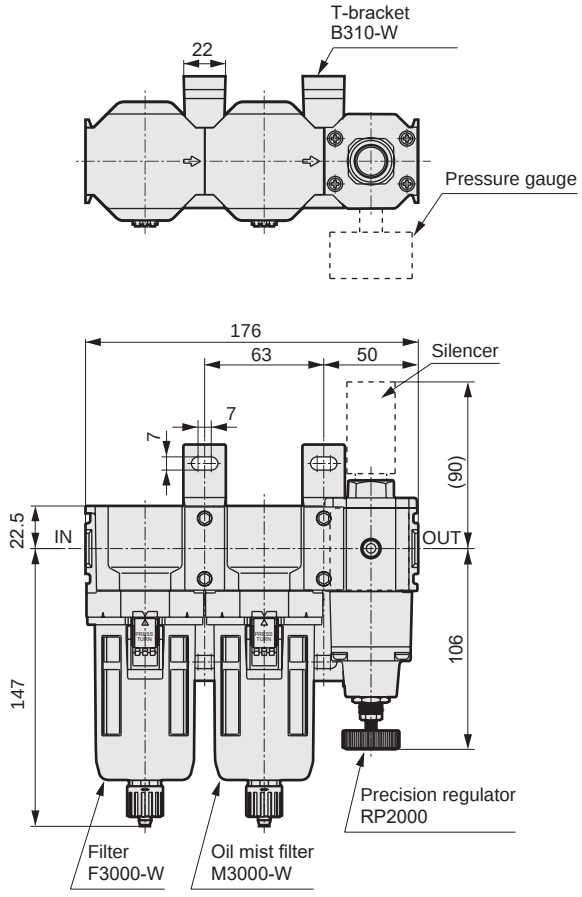

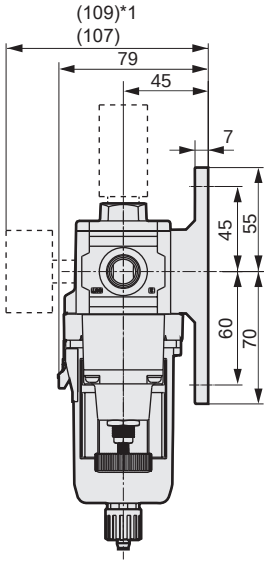

*1. Dimensions when the digital pressure sensor is assembled.

Compatible model	Filter	Oil mist filter	Precision regulator	T-bracket set
Product model No.	F3000-W	M3000-W	RP2000	B310-W (2 pcs.)

Applications

Fluid discharge control

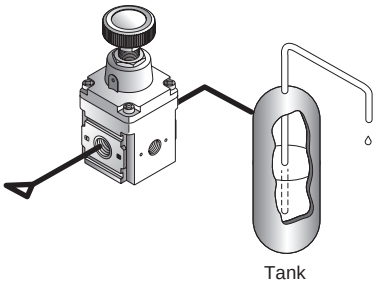

Balance

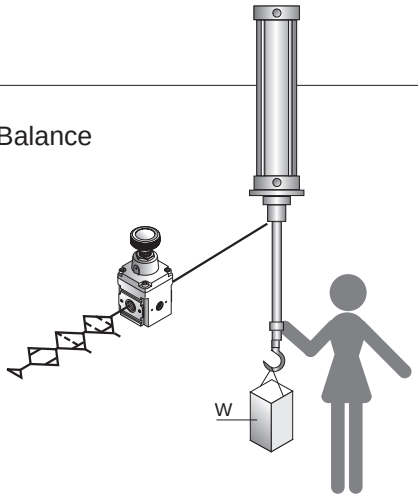

Pilot pressure control

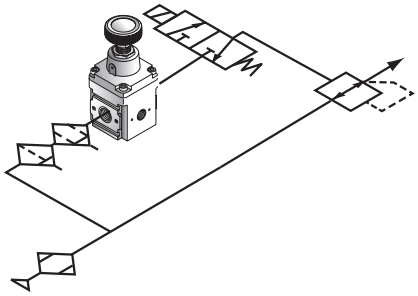

Very low pressure blow

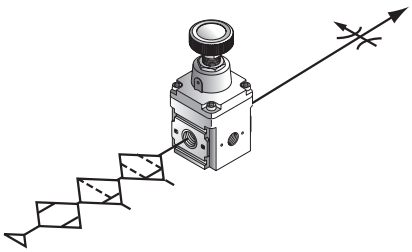

Quick pressure regulation of tank pressure

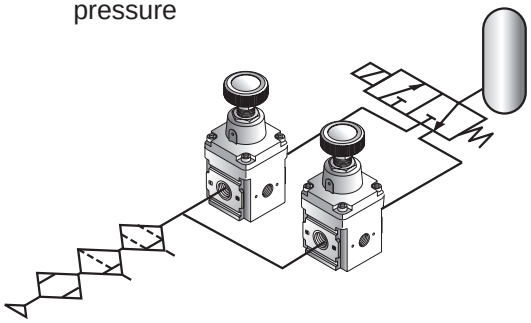

Leakage test

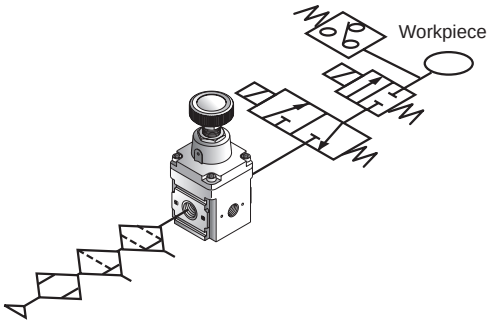

Tension control

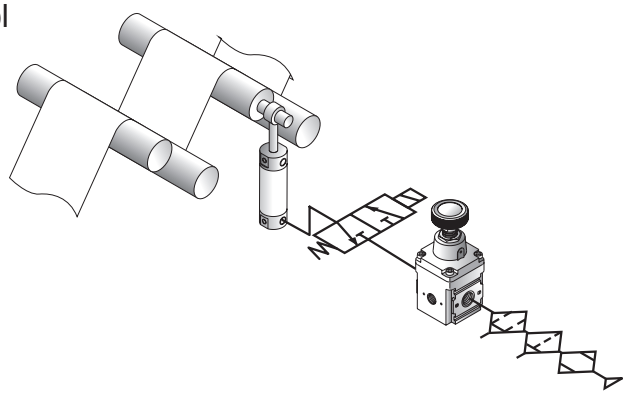

Pneumatic components (F.R.L. unit (precision))

Safety Precautions

Be sure to read this section before use.
Refer to Intro Page 63 for precautions for general pneumatic components.

Product-specific cautions: Precision regulator RP1000/2000 Series

Design/selection

⚠WARNING

■ Use the product in the range of conditions specified for the product.

■ Working fluid must be clean air from which solids, water and oil have been sufficiently removed using a dryer, filter and oil mist filter. Never supply oiled air.
As well, when secondary side pressure, etc., is turned OFF, air on the secondary side will pass through the regulator and be discharged from the EXH port. Thus, if secondary piping or load side interior is dirty, malfunction, characteristics deterioration, etc., may occur. Keep the inside of the pipes clean.

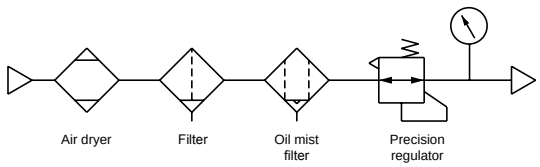

■ Each product has an O-ring groove for modular connection on its OUT side. Select piping that can be sealed at or below the O-ring groove diameter.

Series	RP1000	RP2000
Groove diameter	ø17.6	ø25.4

⚠CAUTION

■ Keep the pressure difference between the primary and secondary sides to 0.1 MPa or more. For RP1000-8-04, if the set pressure is 0.3 MPa or over, keep the pressure difference at 0.2 MPa or over.
(Precautions for RP1000)
When using under conditions where a small pressure difference exists between the primary and secondary sides, the secondary side pressure may pulsate. In this case, increase the secondary side capacity before use. Or set pressure in the depressurizing direction (high pressure → low pressure). Another method is to set the primary pressure to an extremely high level or to somewhat lower the setting pressure, and restrict the secondary side line. If pulsation continues, contact CKD. When using with a low friction cylinder having constant leakage, the secondary pressure may pulsate depending on the working conditions. In this case, restrict the secondary side line and decrease the pressure setting (high pressure → low pressure) to attenuate pulsation. Consult with CKD if the pulsation still does not cease.

(Precautions for RP2000)
If the pressure difference between the primary and secondary sides is large and secondary side piping is large, secondary pressure could pulsate during low flow. In this case, set the primary side to the secondary side pressure +0.1 to 0.2 MPa or restrict the secondary side line.
If pulsation continues, contact CKD.

■ If the regulator is repeatedly turned ON and OFF with the directional switching valve on the primary side, the set pressure may change greatly. Thus, the directional switching valve should be installed on the secondary side.

■ Output pressure exceeding the regulator's set pressure could result in damage or faulty operation of the secondary side devices. Be sure to install a safety device.

■ Do not operate the pressure adjustment knob while the primary side is released to the atmosphere, as performance could deteriorate.

Mounting, installation and adjustment

⚠CAUTION

■ Check IN and OUT indications indicating the air inlet and outlet before connecting. A reverse connection could result in improper operation.

■ Do not move or swing the product by the pressure adjustment knob.

■ Do not install this product in a location where it may be subject to vibrations or shocks.

■ Flush air pipes before connecting the regulator.

■ Use sealing tape when piping. Do not use liquid and solid sealant. In addition, ensure that the sealing tape does not enter.

■ When using in parallel as shown below, do not use the secondary side as a closed circuit. If a closed circuit is required, be sure to set a check valve on the secondary side.

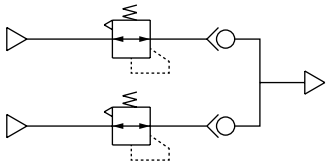

■ Install so that the EXH port is not plugged.

■ When installing on a panel, completely loosen and remove the pressure adjustment knob, insert the body into the ø12.5 panel hole, and fix it to the panel with the panel mounting nut. Then, turn the pressure adjustment knob to attach it to the body. Panel mounting nut recommended tightening torque 2 to 3N·m

[Precautions for RP2000]

If the product is installed horizontally with the panel mounting nut, the panel could be damaged by the weight of the product and vibration.

■ Use appropriate torque to tighten the pipes when connecting them.

- The purpose is to prevent air leakage and damage to bolts.
- First tighten the bolts by hand to ensure that the threads are not damaged, then use a tool.

[Recommended values]

Port thread	Tightening torque N·m
Rc1/8	3 to 5
Rc1/4	6 to 8
Rc3/8	13 to 15

During use/maintenance

⚠CAUTION

■ Working air quality

- Use only compressed air. Air containing corrosive gases, fluids or chemicals could result in improper pressure adjustment due to body damage or rubber deterioration.

■ Working environment

- Avoid use in the following environments.
- When ambient temperature exceeds the range of -5 to 60˚C.
- Where air freezes.
- Places where the unit will be exposed to dripping water and/or coolant.
- Highly humid places where dew condenses due to temperature fluctuations.
- Where salt air or splashing seawater contacts the product.
- In atmospheres containing corrosive gases, liquids and chemicals.
- Where the product is exposed to direct sunlight.
- With the precision regulator RP1000, the set pressure fluctuates by approx. 0.12 kPa/˚C. The pressure tends to drop when the temperature rises.

■ Precautions for use

- Air constantly leaks from the bleed port. This is necessary for precise pressure control, so do not plug the hole.
- Check primary pressure before setting pressure.
- Pressure higher than the primary pressure cannot be set.
- Turn the pressure adjustment knob clockwise to increase secondary pressure, and counterclockwise to lower pressure.
- Pressure is set in the depressurizing direction (high pressure → low pressure), enabling highly precise setting to be made.
- After adjusting pressure, tighten the lock nut, and then fix the knob.
- The precision regulator RP1000 exhaust valve has a metal seal, so a small amount of secondary side air will leak.

■ Maintenance precautions

- Pneumatic components must be disassembled and assembled by qualified personnel.
- Pneumatic Pressure Skill Test Class 2 or higher level is required.
- Read the relevant product instruction manual thoroughly and fully familiarize yourself with the task before disassembling or assembling pneumatic components.
- Personnel must be fully familiar with pneumatic component structure and operational principles and safety requirements.
- Before conducting maintenance, turn the power OFF, stop the supply of compressed air and make sure that there is no residual pressure.

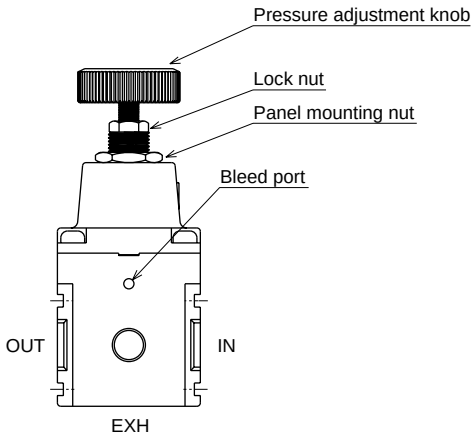

Vacuum filter and regulator

VFA

■ **F.R.L units**

Overview

VFA1000/3000/4000 Series are vacuum filters to remove dust and moisture absorbed with air by vacuum pump and ejector.

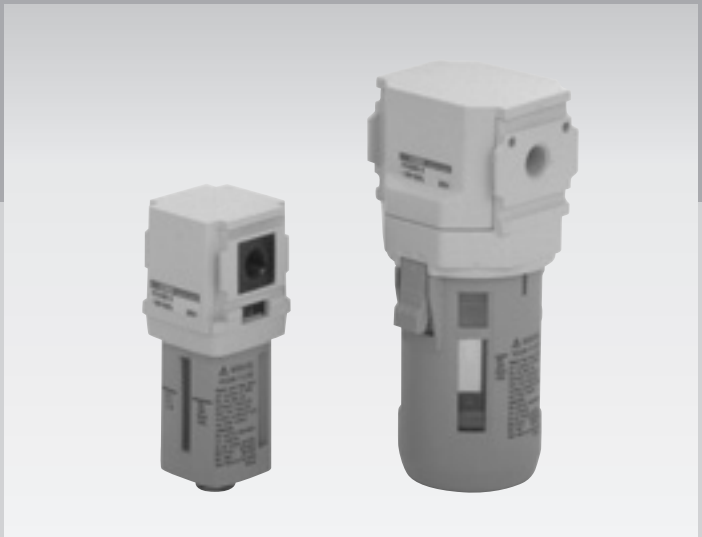

Features

(1) Long service life
As dust is removed in two steps (by louver centrifugal separation effect, then by element filtration) even if the product is used for a long time, pressure loss does not increase.

(2) Moisture can be removed
More than 80% of the moisture is removed with the louver's centrifugal separation effect. (at the recommended flow rate)

(3) Element can be reused
For standard element, mesh is used at the filtration section, and so if contaminated with dust, the element is simply washed for reuse.

CONTENTS

● VFA1000/3000/4000	530
⚠ Safety precautions	533

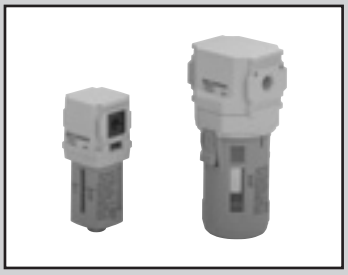

Vacuum filter and regulator

VFA1000/3000/4000 Series

Removes dust and moisture from air when absorbing air by vacuum pump or ejector.

● Port size: Rc1/8 to Rc1/2

JIS symbol 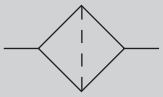

RoHS CAD

Specifications

Model No.		VFA1000		VFA3000		VFA4000	
Working pressure	kPa	-100 (≈-15 psi, -1 bar) to 0 (≈0 psi, 0 bar)					
Proof pressure	MPa	0.5 (≈73 psi, 5 bar)					
Ambient / fluid temperatures	°C	5 (41°F) to 50 (122°F)					
Bowl capacity	cm^3	10		45		80	
Port size	Rc	1/8	1/4	1/4	3/8	3/8	1/2
Weight	kg	0.1		0.3		0.5	
Recommended flow rate *1	ℓ/min(ANR)	60	80	100	200	250	400

*1: Flow rate applies where initial pressure loss is 3 kPa or less (at standard element used).
*2: For standard element, 40 µm of mesh (average) is used in filtration section (material: polyamide), while options include filtration rating 5 µm fiber (material: polypropylene).

Option weight

* Add to the weight of the standard accessories. Unit: kg

	Bowl material	Bracket
Code	M	BW
VFA1000		0.1
VFA3000	0.1	0.17
VFA4000	0.1	0.21

How to order

VFA3000 – 8 – M – B

Ⓐ Model No.
Ⓑ Port size
Ⓒ Option
Ⓓ Attachment

Code		Description	Ⓐ Model No. VFA1000	VFA3000	VFA4000
Ⓑ Port size					
6		Rc1/8	●		
8		Rc1/4	●	●	
10		Rc3/8		●	●
15		Rc1/2			●
Ⓒ Option					
Bowl Material	**Blank**	Polyamide (nylon)	●	●	●
	M	Aluminum alloy (metal)		●	●
Element	**Blank**	40 µm Polyamide	●	●	●
	Y5	5 µm Polypropylene	●	●	●
Ⓓ Attachment					
Blank		None	●	●	●
B		C-bracket	●	●	●

⚠ Precautions for model No. selection

*1: Indicate options for bowl material and element in order.

Specifications for rechargeable battery (Catalog No. CC-1226A)

● Structure compatible with rechargeable battery manufacturing process

Model No. of single bracket

Model No.	Bracket model No.
VFA1000	B120
VFA3000	B320
VFA4000	B420

VFA*000 -.....- **P4**

Flow characteristics

● VFA1000

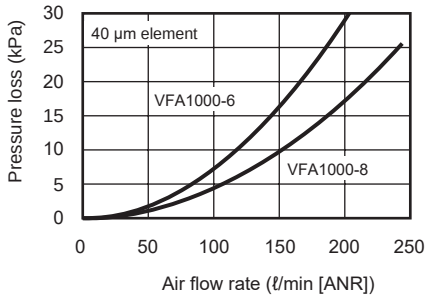

● VFA3000

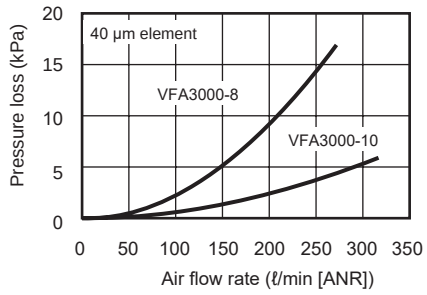

● VFA4000

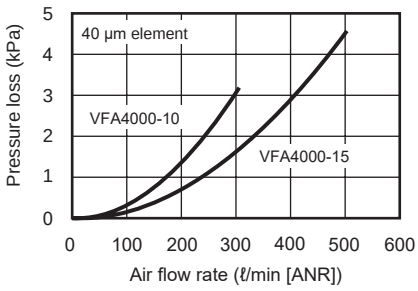

*1: The flow rate of 5 µm element is 80% of that of 40 µm element.

Internal structure and parts list

● VFA1000

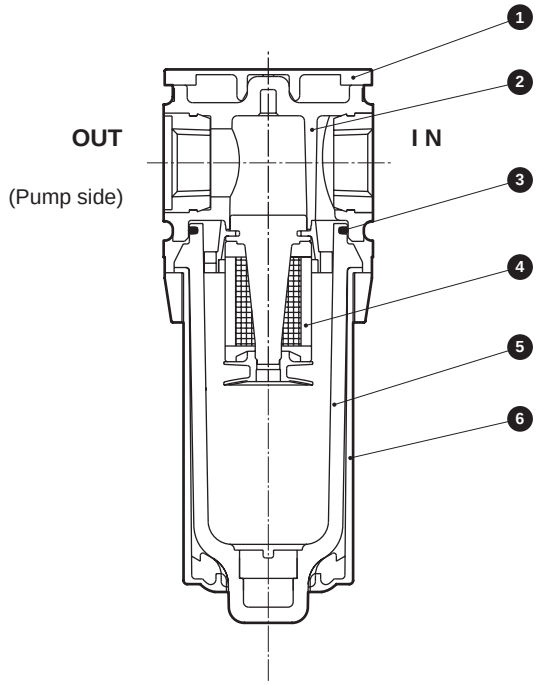

No.	Part name	Material
1	Plate cover	ABS resin
2	Body assembly	Polyamide resin/steel
3	Packing	Special nitrile rubber
4	Element assembly	Polyamide resin Polyacetal resin
5	Bowl	Polyamide resin
6	Bowl guard	Polyamide resin

● VFA3000
● VFA4000

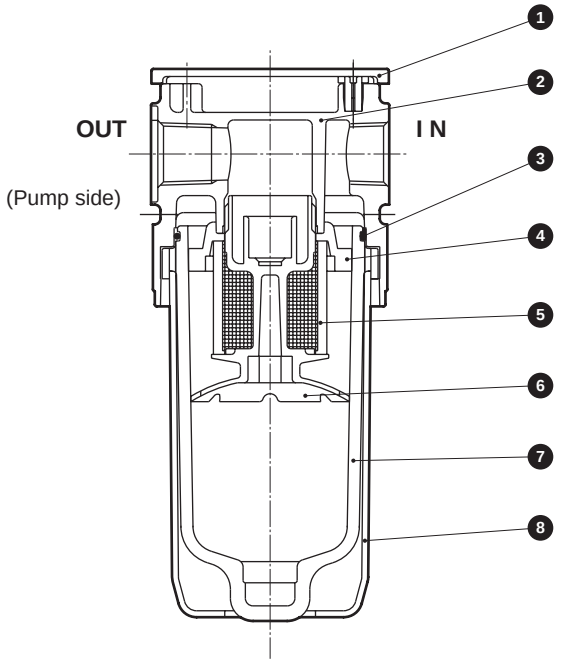

No.	Part name	Material
1	Plate cover	ABS resin
2	Body	Aluminum alloy die-casting
3	O-ring	Special nitrile rubber
4	Louver	Polypropylene resin
5	Element	Polyamide resin
6	Baffle	Polyacetal resin
7	Bowl	Polyamide resin
8	Bowl guard	Polyamide resin

Repair parts list

No./part name / Model No.	④ 40 µm element assembly	④ 5 µm element assembly
VFA1000	VFA1000-ELEMENT-ASSY	VFA1000-ELEMENT-ASSY-Y5

No./part name / Model No.	⑤ 40 µm element	⑤ 5 µm element
VFA3000	VFA3000-ELEMENT	VFA3000-ELEMENT-Y5
VFA4000	VFA4000-ELEMENT	VFA4000-ELEMENT-Y5

Dimensions CAD

● VFA1000

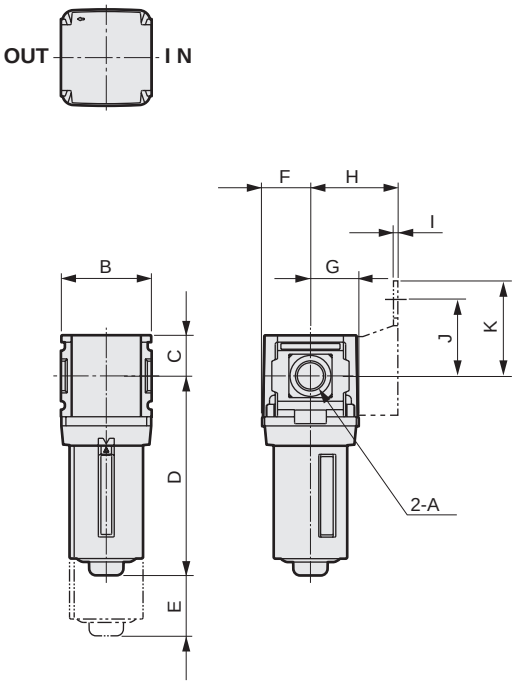

● VFA3000
● VFA4000

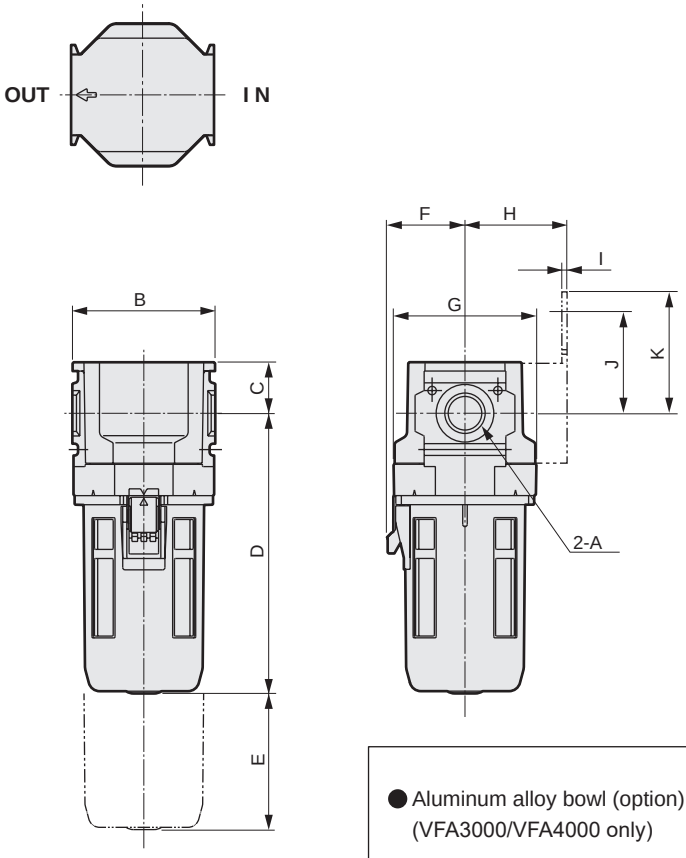

● C-bracket (included)
Model No. B120 (VFA1000)
· Material: Steel
zinc plated

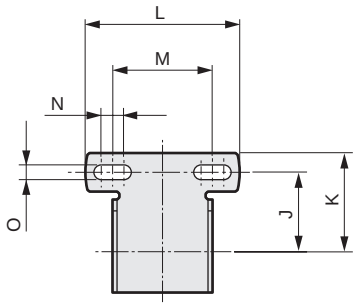

Weight : 0.1kg
Material : Steel

● C-bracket (included)
Model No. B320 (VFA3000)
Model No. B420 (VFA4000)
· Material: Steel
zinc plated

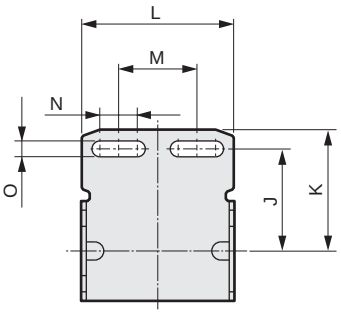

Weight : 0.17 kg (B320)
0.21 kg (B420)
Material : Steel

● Aluminum alloy bowl (option)
(VFA3000/VFA4000 only)

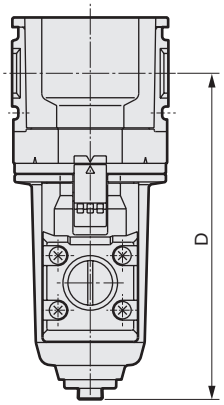

Model No.	D
VFA3000	129
VFA4000	152

Model No.		A	B	C	D	E	F	G	C-bracket dimensions							
									H	I	J	K	L	M	N	O
VFA1000	-6	Rc1/8	40	18	88	40	21.5	21.5	40	2	35	43.5	68	44	10	6.5
	-8	Rc1/4														
VFA3000	-8	Rc1/4	63	22.5	123.5	60	(34.5)	63	45	2.3	45	53.5	67	34.5	16.5	7
	-10	Rc3/8														
VFA4000	-10	Rc3/8	80	22.5	149	60	(42.5)	79	55	2.3	45	53.5	84	55	14	7
	-15	Rc1/2														

Vacuum components

Safety Precautions

Be sure to read this section before use.
Refer to Intro Page 63 for general precautions
and refer to "⚠ Safety precautions" for detailed precautions for individual series.

Product-specific cautions: Vacuum filter VFA Series

Design/selection

⚠WARNING

- Use the product within the specifications range.
- The product is a vacuum filter. Do not apply the pressure to the product except instantaneous pressurization by vacuum bursting.
  (Do not use the product for pressurization only.)
- Install the product where it is not exposed to direct sunlight.
- Do not use this product in an atmosphere containing corrosive gases, chemicals, or sea water, or where the product could come in contact with these, and do not use as a vacuum circuit for these substances.
- When using a polyamide bowl, do not use this product for vacuum circuits that could come in contact with acids, alcohols, carboxylic acids, other organic compounds, screw-lock agents, or air containing these substances. The bowl may be damaged.
- For chemical resistance of the polyamide bowl, refer to "Chemical resistance of plastic bowl" on page 361. Use an optional aluminum alloy bowl when a polyamide bowl cannot be used. (VFA3000/4000 Series only)
- Do not install this product in a location where it may be subject to vibrations or shocks.
- Piping load torque
  Do not apply bending moment due to piping load to the body or piping.

	VFA1000 Series	VFA3000/4000 Series
Allowable bending moment (N·m)	15	50

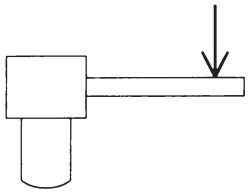

Avoid piping fixed with a single support, as this can result in excessive force and lead to damage.

- Each product has an O-ring groove for modular connection on its OUT side. Select piping that can be sealed at or below the O-ring groove diameter.

Series	VFA1000	VFA3000/VFA4000
Groove diameter	ø17.6	ø25.4

Installation

⚠CAUTION

- Install the body vertically with the bowl facing downward.
  Also, secure enough room to mount or dismount the bowl and bowl guard.
- Before connecting to devices, flush piping with blowing air to remove foreign matter.
- When screwing in piping or fittings, check that swarf from port threads or sealant does not enter.
- Check the IN and OUT side directions before piping.

[Connection example]

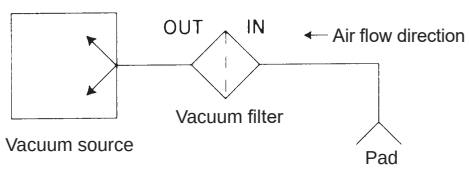

- When piping, make sure that no leakage occurs at the sealed part of the pipe port thread. After piping, check if the required degree of vacuum is reached.
- Piping screw-in torque
  When piping, do not apply excessive torque to the body and piping section.

	VFA1000 Series	VFA3000/4000 Series
Allowable torque (N·m)	15	30

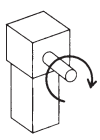

- Also, refer to Intro Page 66 for precautions regarding installation and adjustment.

Use/maintenance

⚠ WARNING

- Use a polyamide bowl and bowl guard together.
- Perform periodical inspections to check the polyamide bowl for cracks, damage, and other deterioration. Replace the bowl with a new one or an aluminum alloy bowl if you find any damage.
- As a clogged filter element may cause degradation of the vacuum source, perform periodical inspection/cleaning/replacement of the element.
- Dust and drainage accumulated in the bowl must be discharged periodically before they reach the upper limit of the bowl guard. If use at or exceeding the upper limit occurs, problems with the component may occur as dust and drainage accumulated in the bowl may flow to the OUT side of the piping.
- When the bowl and bowl guard are detached to remove dust or to clean or replace the filter element, the pressure in the bowl must be reduced to atmospheric pressure before starting work. When the bowl and bowl guard are remounted, check if they are securely inserted into the body and fixed, and if the required degree of vacuum is reached.
- Use a household neutral detergent to wash the bowl, and then rinse with water.
- To regenerate the element, flush with blown air or wash with household neutral detergent.
- Do not push the mesh part of the filter element manually. Otherwise the mesh part may peel off.

⚠ CAUTION

- Refer to the instruction manual included with the product for maintenance of the filter element.

Vacuum regulator

VRA2000

■ Vacuum components

Overview

VRA2000 is a regulator used in vacuum circuits requiring precise pressure adjustment, such as fine workpiece suction or inspection systems.

Features

① Large flow rate with compact body
Min. class dimension (*50×90)
Lath max flow rate
(200 ℓ/min (A)NR))

② Switchable between locking and non-locking
Change assembly direction of the slide key to change locking to non-locking.

③ Module connection to vacuum filter
Vacuum filter VFA3000 or VFA4000 (Page 529) and modules can be connected

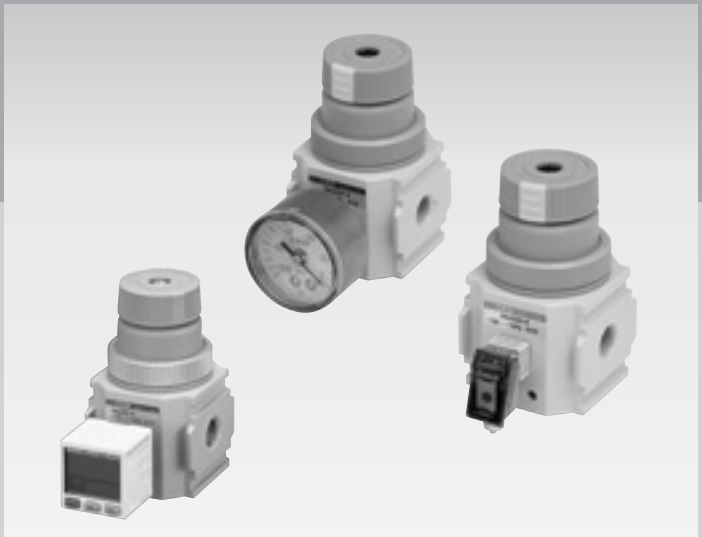

CONTENTS

● VRA2000 536
⚠ Precautions for use 539

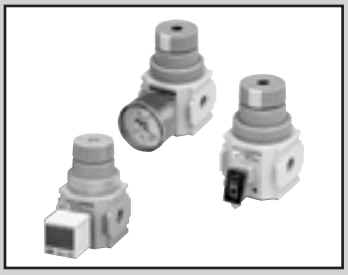

Vacuum regulator

VRA2000 Series

● Port size: Rc1/4, Rc3/8, G1/4, G3/8, 1/4NPT, 3/8NPT

JIS symbol

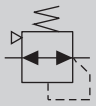

RoHS CAD

Specifications

1 MPa = 10 bar

Model No.		VRA2000-8	VRA2000-10
Set pressure	kPa	-100 (≈-15 psi) to -1 (≈-0.2 psi)	
Ambient / fluid temperatures	°C	5 (41°F) to 50 (122°F)	
Balance leak flow rate	ℓ/min(ANR)	1 *3	
Max. flow rate	ℓ/min(ANR)	200 *1	
Port size	IN/OUT	1/4	3/8
	Gauge	1/8	
Weight	kg	0.29	

*1: The max. flow rate is the flow rate when the secondary side is completely closed and the primary pressure is at -101.3 kPa, and then after adjusting the secondary pressure to -100kPa, the secondary side is fully opened.
*2: Available only for port size Rc.
*3: Flow rate when primary pressure is set to -95 kPa or less and secondary pressure to -45 kPa while closed.

Specifications for rechargeable battery (Catalog No. CC-1226A)

● Structure compatible with rechargeable battery manufacturing process

VRA2000-.....- **P4**

How to order

VRA2000 – **8** – **GB**

Ⓐ Port size

Ⓑ Option (Enclosed product)

Code	Description	
Ⓐ Port size		
8	Rc1/4	
10	Rc3/8	
8G	G 1/4	
10G	G 3/8	
8N	1/4NPT	
10N	3/8NPT	
Ⓑ Option		
Blank	None	
G	Pressure gauge	*2
P	Pressure switch	*2
B	C-bracket	
B3	L-bracket	
B4	B-bracket	
R2	Digital pressure sensor	*2

Characteristic curve

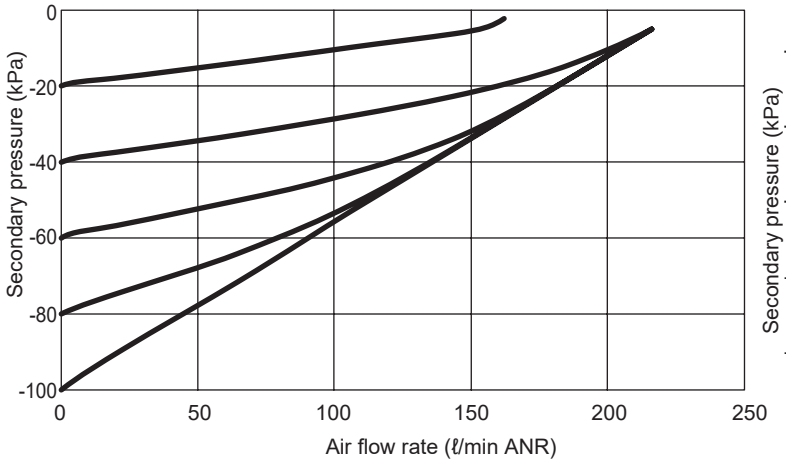

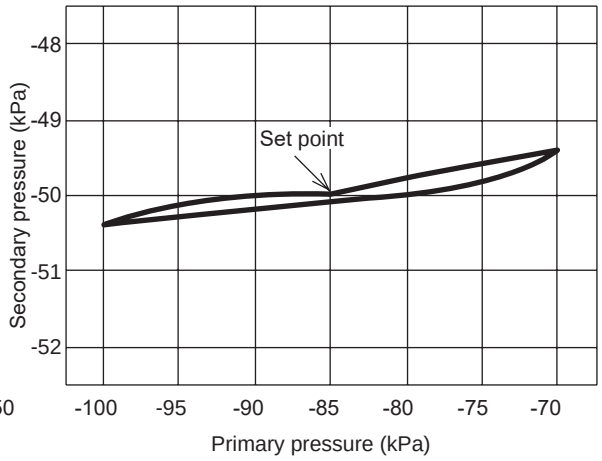

*1: The primary side vacuum pump is measured with using discharge rate 500 ℓ/min.

Applications

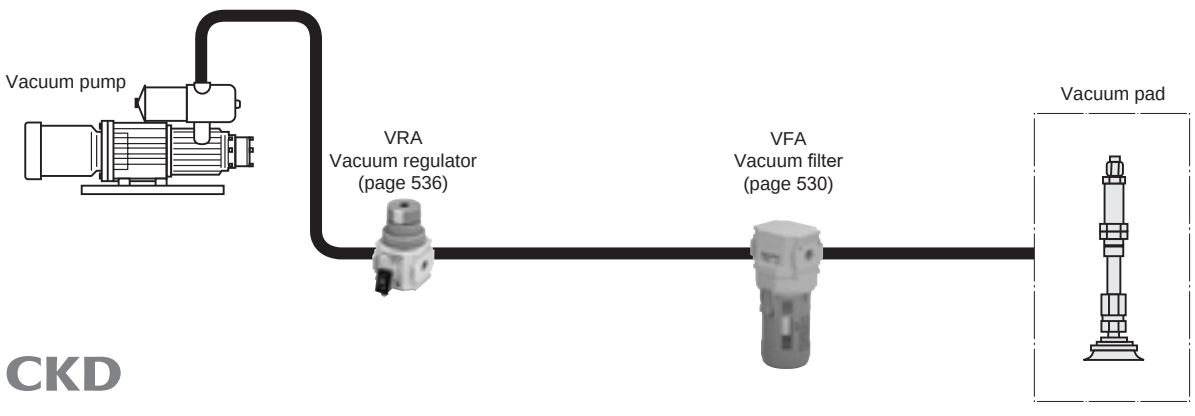

Internal structure and parts list

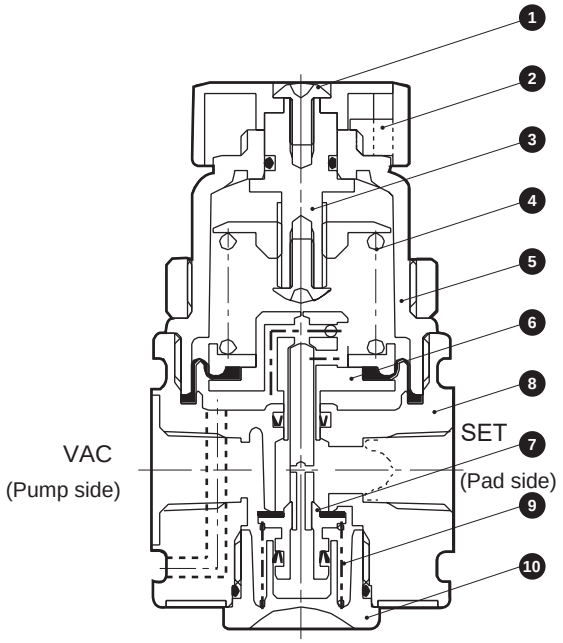

Parts list

No.	Part name	Material
1	Cross-recessed truss machine screw	Steel
2	Knob assembly	Polybutylene terephthalate
3	Adjusting screw assembly	Copper alloy/steel/nitrile rubber
4	Adjusting spring	Stainless steel
5	Cover assembly	Aluminum alloy/PBT
6	Diaphragm assembly	Aluminum alloy/steel/nitrile rubber
7	Valve assembly	Aluminum alloy/copper alloy/hydrogenated nitrile rubber
8	Body assembly	Aluminum alloy/stainless steel/nitrile rubber
9	Bottom spring	Stainless steel
10	Bottom plug assembly	Polybutylene terephthalate/nitrile rubber

Repair parts list

Part name	Model No.
Diaphragm assembly	VRA2000-D
Valve assembly	VRA2000-V

Dimensions

● VRA2000-8/VRA2000-10

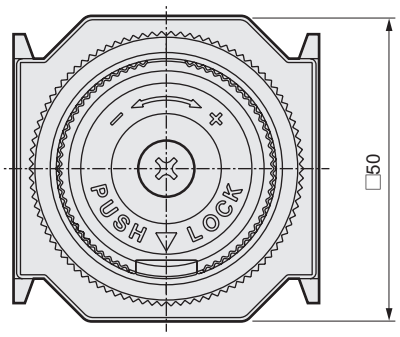

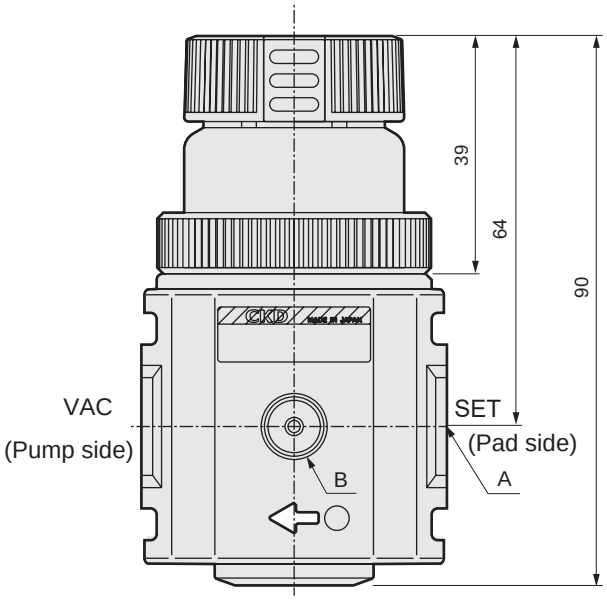

Hole dimension for panel mount: ø38.5

Model No.	A	B
VRA2000-8	Rc1/4	Rc1/8
VRA2000-10	Rc3/8	Rc1/8

● Pressure gauge (G)
VG41D-6-P01

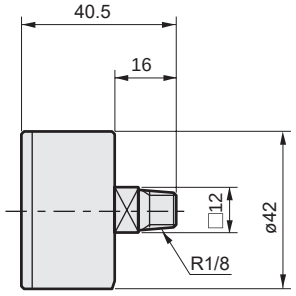

With limit marker
-100 to 0 kPa

Weight: 82g

● B-bracket (B4)
B240

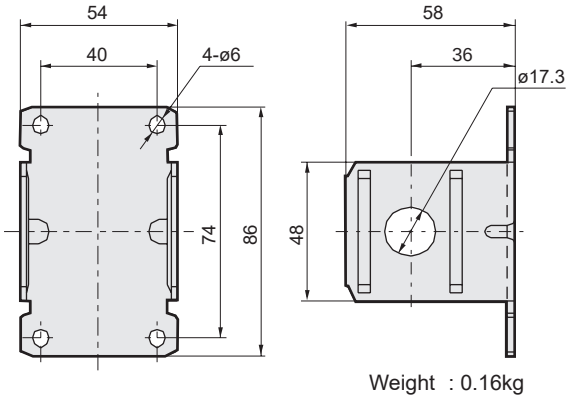

Weight : 0.16kg
Material : Steel
Zinc plated

● C-bracket (B) B220

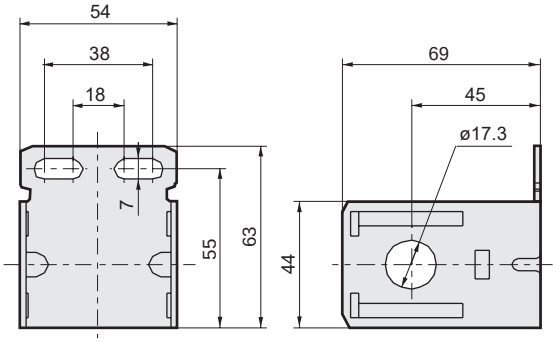

Weight : 0.15kg
Material : Steel
Zinc plated

● L-bracket (B3) B230

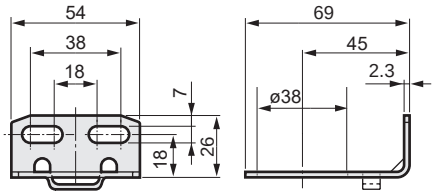

Weight : 60g
Material : Steel
Zinc plated

● Pressure switch (P)
PPE-V01-6

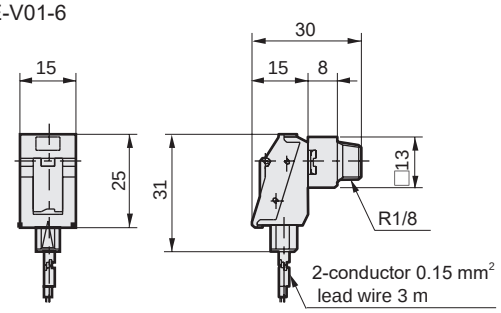

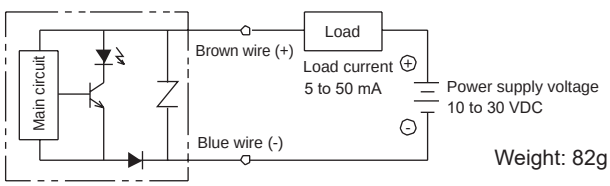

Weight: 82g

CKD

Dimensions

● Digital pressure sensor
PPX-R01N-6M

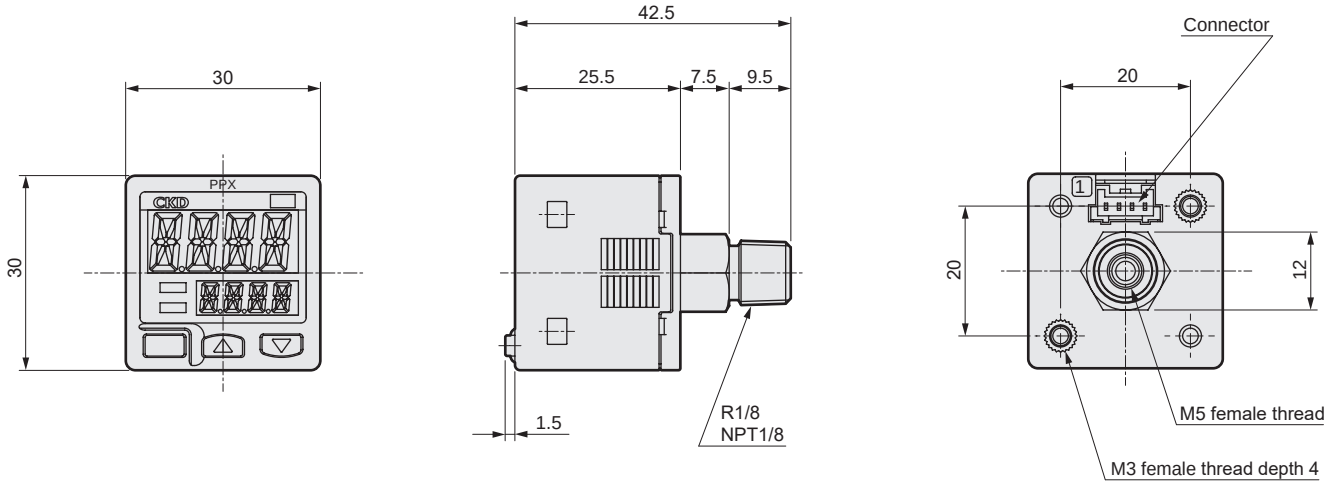

Note: Refer to page 1150 for details of digital pressure sensor PPX Series.

Weight: 40g

⚠ Safety precautions

⚠ WARNING

1 Use the product within specifications.

2 The product is a regulator for vacuum. Do not use in a pressurized state.

3 Install the product where it is not exposed to direct sunlight.

4 Do not use this product in an atmosphere containing corrosive gas, chemicals, or sea water, or where these could come in contact with it, and do not use as a vacuum circuit for these substances.

5 Do not install this product in a location where it may be subject to vibrations or shocks.

6 Tighten pipes with the appropriate torque.

7 Limit bending moment arising from the weight of pipelines to 50 N·m or less when installing.

Port thread	Tightening torque N·m
Rc1/4	6 to 8
Rc3/8	13 to 15

8 Turning the knob in the + direction from the set pressure 0 activates the stopper and the knob does not turn.
Note that if torque is forcibly applied in the + direction, the knob may lock and become inoperable.

⚠ CAUTION

1 Install this product vertically with the knob facing upward or downward.

2 Before connecting to devices, flush piping with air blow to remove foreign matter.

3 The set pressure changes from the initial set point based on working environment and conditions, as well as aging of part materials. Check the pressure regularly, and reset if conditions have changed.

4 When screwing in piping or fittings, check that swarf from port threads or sealant does not get inside.

5 Check IN and OUT side direction before piping.

6 This product is adjusted with constant air leakage, so vacuum pressure may not rise if the vacuum pump capacity is too small. Please be careful.

7 The product has an O-ring groove for modular connection on its pump side. Select piping that can be sealed at or below the O-ring groove diameter.

Series	VRA2000
Groove diameter	ø25.4

Clean filter/regulator

■ **F.R.L units**



CONTENTS

Clean filter

Product introduction (FCS) 542
● Inline clean filter (FCS500) 544
● Inline clean filter (FCS1000) 548
Product introduction (FAC) 554
● Clean exhaust filter (FAC) 554

Clean regulator

Product introduction (RC2000) 566
● Clean regulator (RC2000) 566
● Regulator (2619) 570

⚠ Safety precautions 573

* An oil-prohibited regulator is also available.
Refer to page 288 for oil-prohibited/modular design.

FCS 500 1000 Series

Our original hollow fiber membrane provides innovative filter performance.

Longer service life.

Inline clean filter FCS500/1000 Series with hollow fiber membrane filter element provides high performance in all aspects including filtration performance, flow rate, pressure loss, service life and installation space.

FCS500 Series

■ Flow rate/50, 80 (ℓ/min)

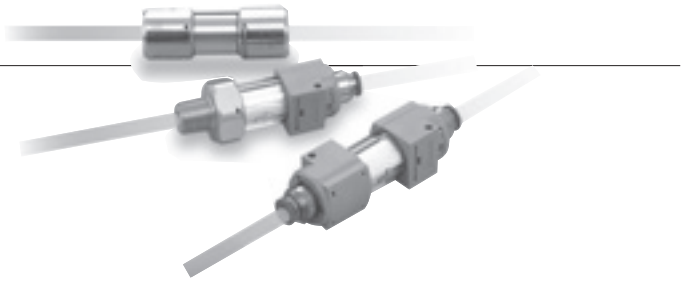

FCS1000 Series

■ Flow rate/300, 400 (ℓ/min)

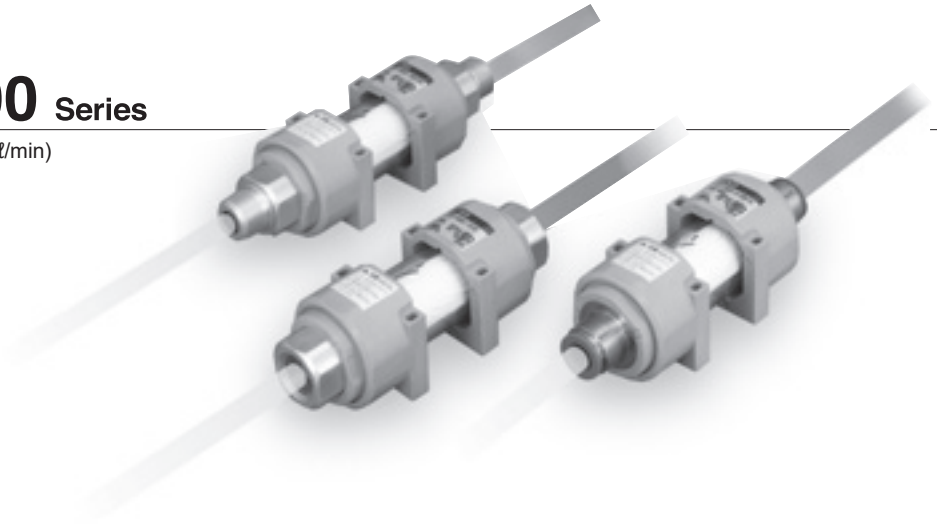

■ Example of compatible circuit

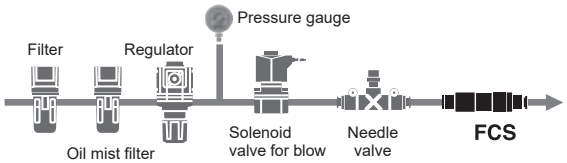

Applications

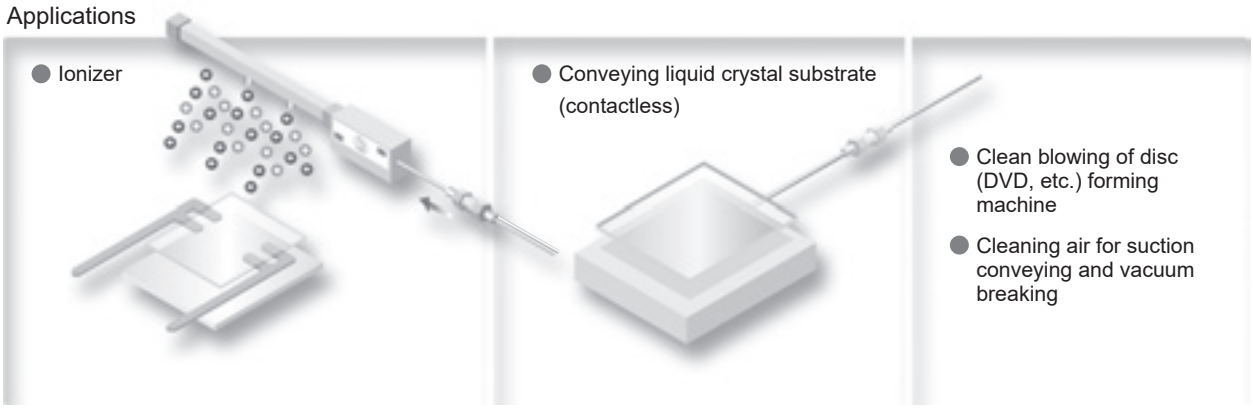

- Ionizer
- Conveying liquid crystal substrate (contactless)
- Clean blowing of disc (DVD, etc.) forming machine
- Cleaning air for suction conveying and vacuum breaking

0.01 µm high precision filtration, 99.99% removal efficiency

Hollow fiber membrane element has enabled 0.01 µm high precision filtration and 99.99% removal efficiency.

Long service life

Considerably longer service life. Approximately five times longer than the flat membrane.

■ Dust rate - pressure drop graph

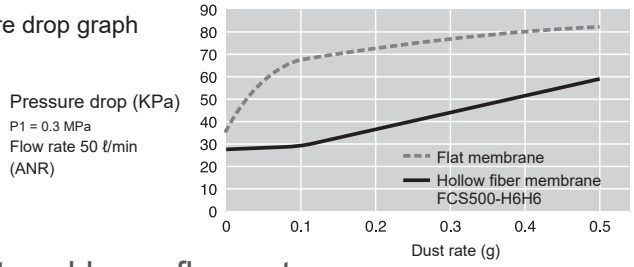

Compact, light and large flow rate

The filtration area is 3 to 10 times larger and enables larger flow rate and less pressure loss than the flat membrane of the same capacity. If the flow rate is the same, the hollow fiber membrane can be more compact and lighter.

Oil-prohibited specifications

Parts are all degreased and cleaned. The manufacturing processes from assembling to packaging are performed in clean rooms.

Easy maintenance

As the case of resin type is transparent, it is easy to visually check for dirt on the element.

Wide range of choices

Two kinds of flow rate (500 and 1000 Series), resin and stainless steel materials, and the mounting options of push-in fitting, male thread piping and female thread piping are available.

Enlarged view of hollow fiber

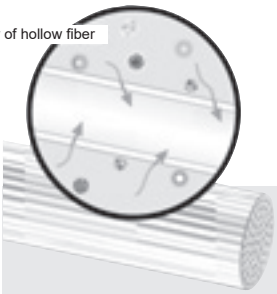

Structure of hollow fiber membrane

The hollow fiber membrane is a tubular membrane with a diameter of 3 mm or less, and having a multi-porous structure with an infinite number of small holes on the membrane wall. The particles found in the fluid are accurately removed when the fluid passes through this membrane. Our product uses a filter material of hollow fiber module made by bundling several tens of hollow fiber membranes. The filter has an extremely large membrane area enabling a large flow rate per unit volume.

■ Hollow fiber membrane

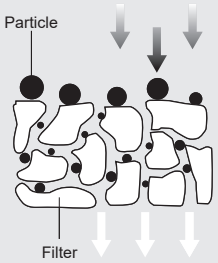

■ Flat membrane

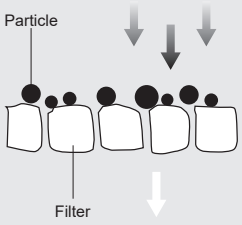

Inline clean filter

FCS Series Variation

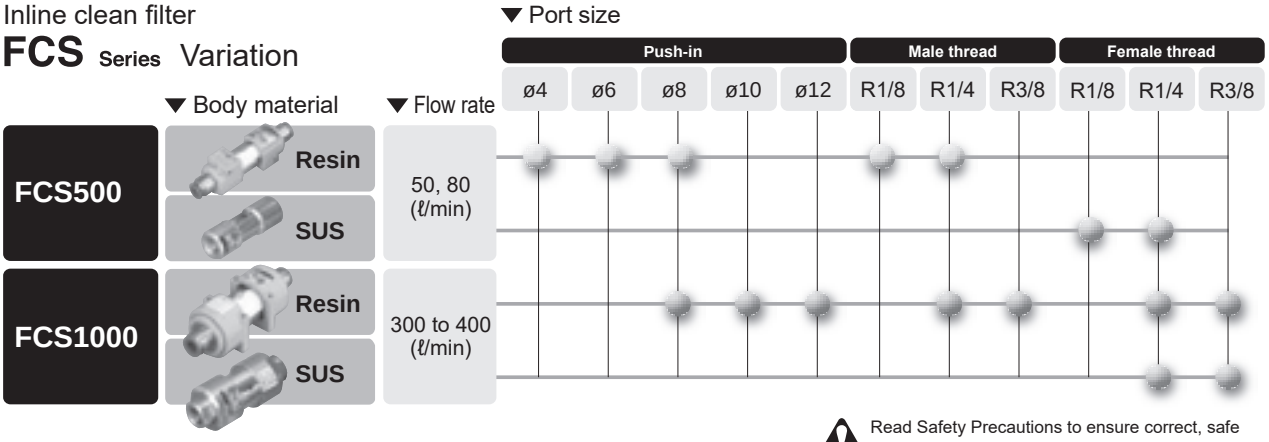

Read Safety Precautions to ensure correct, safe product use.

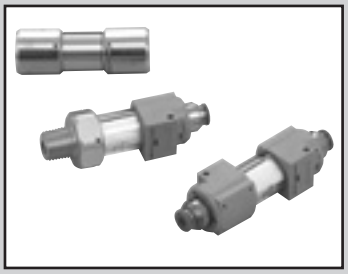

Inline clean filter

FCS500 Series

● Port size: Rc1/8, Rc1/4, R1/8, R1/4
Push-in fitting ø4, ø6, ø8

JIS symbol 

RoHS CAD

Specifications

1 MPa ≈ 145.0 psi, 1 MPa = 10 bar

Item		Standard element resin type	Male thread piping	P9 element stainless steel	
		FCS500-(*1)(*2)	FCS500-(*1)(*2)	FCS500-66-P90 FCS500-66-P94	FCS500-88-P90 FCS500-88-P94
Working fluid		Compressed air, N_2			
IN side bore size (*1)		Select from ø4, ø6 and ø8	Select from ø4, ø6, ø8, R1/8 and R1/4	Rc1/8	Rc1/4
OUT side bore size (*2)				Rc1/8	Rc1/4
Proof pressure MPa		1.5 (≈220 psi, 15 bar)	1.5 (≈220 psi, 15 bar)	2.25 (≈330 psi) (compressed air), 1.5 (≈220 psi) (N_2)	
Differential pressure-resistant MPa		0.5 (0.2 at 45 (113°F) to 50 (122°F)°C)	0.5 (0.2 at 45 (113°F) to 50 (122°F)°C)	0.5 (≈73 psi, 5 bar)	
Working pressure MPa		-0.095 (≈-14 psi) to 0.99 (≈140 psi) *2	-0.095 (≈-14 psi) to 0.99 (≈140 psi) *2	-0.095 to 1.5 (compressed air), -0.095 to 0.99 (N_2)	
Ambient / fluid temperatures °C		5 (41°F) to 50 (122°F)	5 (41°F) to 50 (122°F)	5 (41°F) to 45 (113°F)	
Filtration rating µm		0.01 (removal efficiency 99.99%)			
Processing flow rate ℓ/min (ANR) *1		50 (H8H8 type: 80)	50 (H88A and 8AH8 types: 80)	50	80
Weight g		45	45	100	100
Material	Body	Polyamide	Polyamide, aluminum (alumite treatment)	Stainless steel	
	Case	Clear polyamide	Clear polyamide	Stainless steel	
	Element	Polypropylene + urethane			
Assembling/inspection/packaging		Integrated production in cleanroom			
Cleaning		Degreasing			

*1: Initial flow rate at primary pressure 0.7 MPa and pressure drop 0.03 MPa.
*2: Maximum working pressure varies with working temperature. Check graphs showing the relationship of working temperature and maximum working pressure.

Relation of the working temperature and maximum working pressure for element resin and male thread piping types

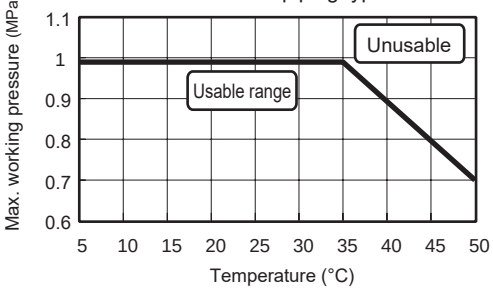

Flow characteristics

● FCS500-H8H8 ● FCS500-H88A ● FCS500-8AH8
● FCS500-88-P90/P94

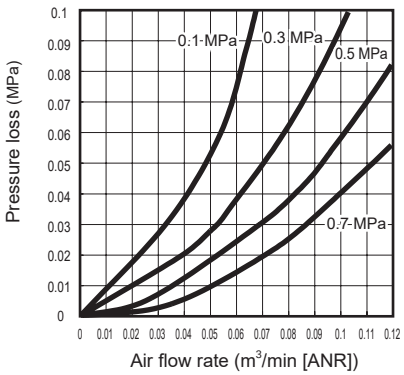

● FCS500-H4H4 ● FCS500-H6H6 ● FCS500-H46A
● FCS500-66-P90/P94 (products including ø4 and ø6 fittings, and R1/8 and Rc1/8 connections)

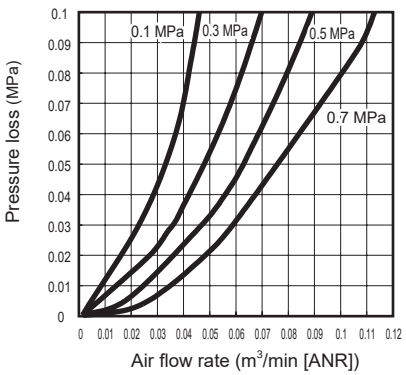

How to order

● Resin

FCS500 - H4 H4

- FCS500: Model No. (clean-room specifications) (oil-prohibited specifications)
- Ⓐ IN side Port size
- Ⓑ OUT side Port size

Ⓐ IN side port size	
H4	ø4
H6	ø6
H8	ø8
6 A	R 1/8
8 A	R 1/4

Ⓑ OUT side port size	
H4	ø4
H6	ø6
H8	ø8
6 A	R 1/8
8 A	R 1/4

*1: Two mounting screws (M2.5 x 25) and two spring washers are included with the product. (These are not included when 6A or 8A is selected for the IN or OUT side connection port size.)
*2: When using male thread piping for both IN and OUT sides, confirm that piping does not apply a lateral load or bending torque during installation.

● Stainless steel

FCS500 - 88 - B - P90

- FCS500: Model No. (clean-room specifications) (oil-prohibited specifications)
- Ⓐ Port size
- Ⓑ Included
- Ⓒ Clean-room specifications

Ⓐ Port size	
66	IN side/OUT side port size Rc1/8
88	IN side/OUT side port size Rc1/4

Ⓑ Included	
Blank	No
B	Bracket, mounting screw

Ⓒ Clean-room specifications		
	Structure/treatment	Material restrictions
P90	Stainless steel Oil-prohibited	-
P94	Stainless steel Oil-prohibited	Copper-based/Silicon-based/Halogen-based (fluorine/Chlorine/oxalic) Not available

Note: "P94" is made to order.

● Model No. of single bracket

FCS500-B Weight: 6 g

(Bracket x1, mounting screw (M4x6) 2l)

Specifications for rechargeable battery (Catalog No. CC-1226)

● Design compatible with rechargeable battery manufacturing process

FCS500 — ····· — P40

Internal structure and parts list

● Resin type

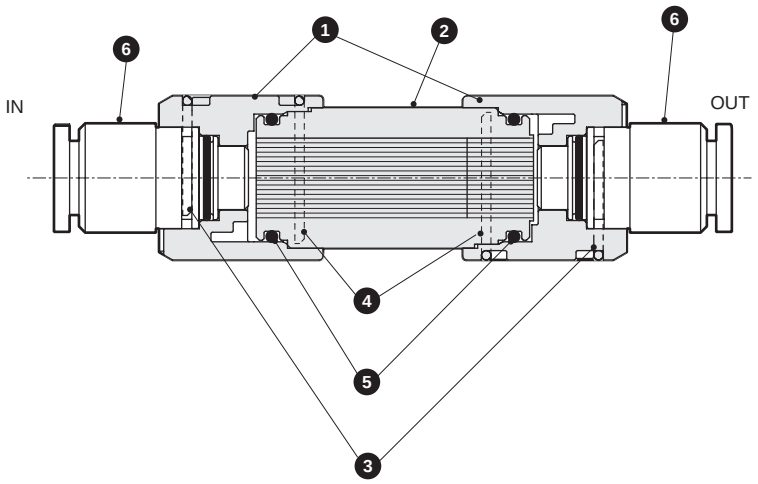

● Stainless steel

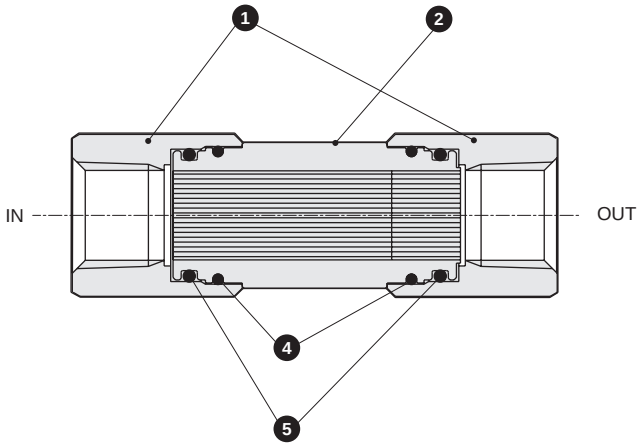

Cannot be disassembled

● Parts list

No.	Part name		Standard element resin type	Male thread piping	P9* element stainless steel
1	Body		Polyamide	Polyamide, aluminum (alumite treatment)	Stainless steel
2	Element	Housing	Clear polyamide	Clear polyamide	Stainless steel
		Filter	Polypropylene	Polypropylene	Polypropylene
		Filler material	Urethane	Urethane	Urethane
3	Pin		Stainless steel		
4	Pin		Stainless steel		
5	O-ring		Fluoro rubber		Fluoro rubber (clean-room specs P90) HNBR (clean-room specs P94)
6	Cartridge fitting		Copper alloy (nickeling) Hydrogenated nitrile rubber		-

Dimensions

● Resin type
Port size
IN side (cartridge fitting) - OUT side (cartridge fitting)

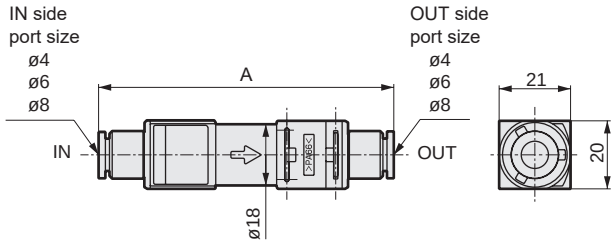

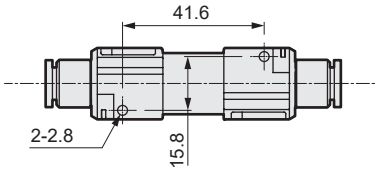

● Male thread piping
Port size
Cartridge fitting - male thread

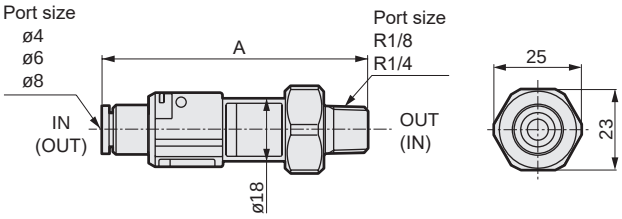

Port size
Male thread - male thread

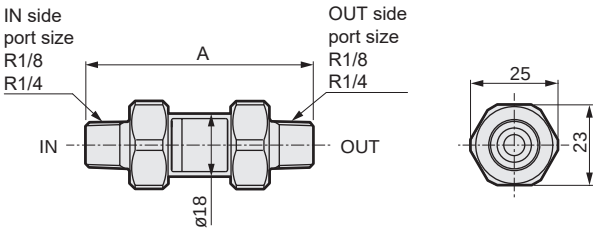

Model No.	FCS500 (standard element, resin type/male thread piping)													
Bore size model No.	H4H4	H4H6 H6H4	H4H8 H8H4	H46A 6AH4	H48A H86A 6AH8 8AH4	6A6A	6A8A 8A6A	H6H6	H6H8 H8H6	H66A 6AH6	H68A 8AH6	8A8A	8AH8 H88A	H8H8
Dimension A	80.5	83	84	69.5	73	58.5	62	85	86	72	75	65	76	87

● Stainless steel

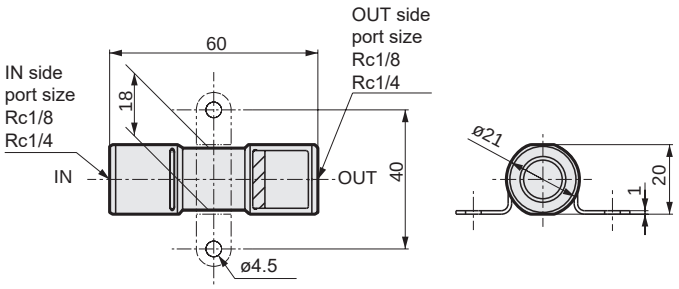

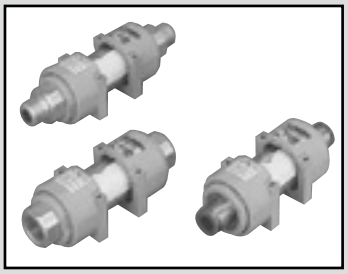

Inline clean filter

FCS1000 Series

● Port size: Rc1/4, Rc3/8, R1/4, R3/8
Push-in fitting ø8, ø10, ø12

JIS symbol 

RoHS CAD

Specifications

1 MPa ≈ 145.0 psi, 1 MPa = 10 bar

Item		Resin		Stainless steel (made to order)
		FCS1000-(*1)(*2)		FCS1000-(*1)(*2)-P90 FCS1000-(*1)(*2)-P94
Working fluid		Compressed air, N_2		
IN side bore size (*1)		Select from push-in fittings ø8, ø10, ø12, R1/4, R3/8, Rc1/4 and Rc3/8		Select from Rc1/4 and Rc3/8
OUT side bore size (*2)				
Proof pressure MPa		1.5 (≈220 psi, 15 bar)		2.25 (≈330 psi) (compressed air), 1.5 (≈220 psi) (N_2)
Differential pressure-resistant MPa		0.5 (≈73 psi, 5 bar)		
Working pressure MPa		-0.095 (≈-14 psi, -0.95 bar) to 0.99 (≈140 psi, 9.9 bar)		-0.095 to 1.5 (compressed air), -0.095 to 0.99 (N_2)
Ambient / fluid temperatures °C		5 (41°F) to 45 (113°F)		
Filtration rating µm		0.01 (removal efficiency 99.99%)		
Processing flow rate ℓ/min(ANR)		300 to 400 *1		
Weight kg		Push-in fitting	Other than push-in fitting	0.5
		0.15	0.11	
Material	Body	Polyamide		Stainless steel
	Case	Clear polyamide		Stainless steel
	Element	Polypropylene + urethane		
Assembling/inspection/packaging		Integrated production in cleanroom		
Cleaning		Degreasing		

*1: Initial flow rate at primary pressure 0.7 MPa and pressure drop 0.03 MPa. (Differs according to port size.)

Flow characteristics

● FCS1000-H8H8
● FCS1000-8A8A

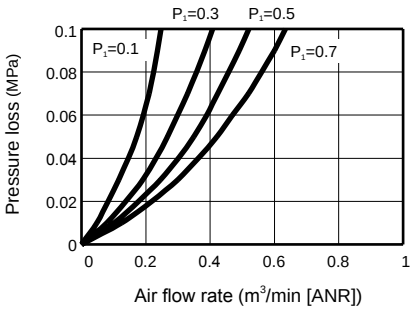

● FCS1000-H10H10
● FCS1000-10A10A
● FCS1000-88
● FCS 1000-88-P90/P94

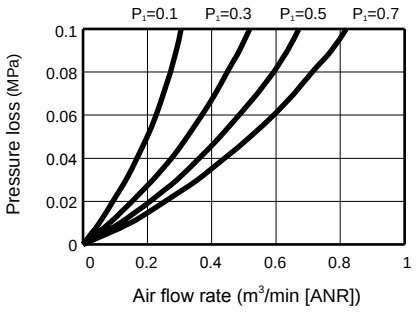

● FCS1000-H12H12
● FCS1000-1010
● FCS 1000-1010-P90/P94

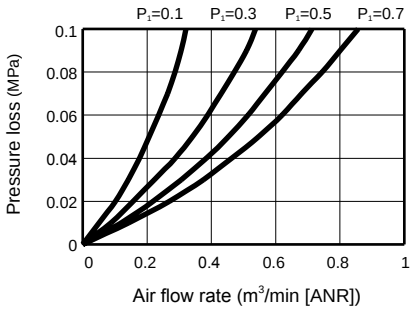

How to order

● Resin type

FCS1000 - **H8** **H8**

Model No. (clean-room specifications) (oil-prohibited specifications)

Ⓐ IN side port size

Ⓑ OUT side port size

Ⓐ IN side port size	
H8	ø8
H10	ø10
H12	ø12
8A	R1/4
10A	R3/8
8	Rc1/4
10	Rc3/8

Ⓑ OUT side port size	
H8	ø8
H10	ø10
H12	ø12
8A	R1/4
10A	R3/8
8	Rc1/4
10	Rc3/8

*1: Two mounting screws (M3 x 40), two plain washers, and two spring washers are included with the product.

● Stainless steel (made to order)

FCS1000 - **8** **8** - **P90**

Model No. (clean-room specifications) (oil-prohibited specifications)

Ⓐ IN side port size

Ⓑ OUT side port size

Ⓒ Clean-room specifications

Ⓐ IN side port size	
8	Rc1/4
10	Rc3/8

Ⓑ OUT side port size	
8	Rc1/4
10	Rc3/8

Ⓒ Clean-room specifications		
	Structure/treatment	Material limitations
P90	Stainless steel material used Oil-prohibited	-
P94	Stainless steel material used Oil-prohibited	Use of copper-, silicon-, or halogen-based materials (e.g. fluorine, chlorine, or bromine) is not possible.

● Single unit model number for replacement element (1 element, 2 O-rings)

· For resin: **FCS1000-E**

· Stainless steel

For P90: **FCS1000-E-P90** (made to order)

For P94: **FCS1000-E-P94** (made to order)

Specifications for rechargeable battery

(Catalog No. CC-1226A)

● Design compatible with rechargeable battery manufacturing process

FCS1000-.....- **P40**

Internal structure and parts list

● Resin type

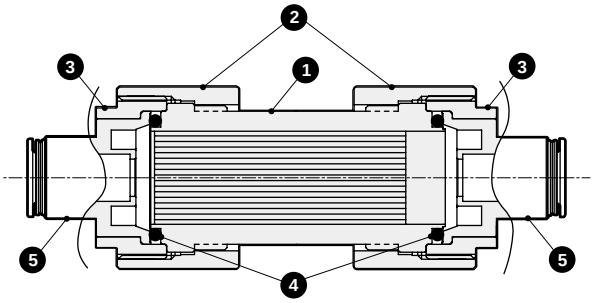

● Stainless steel

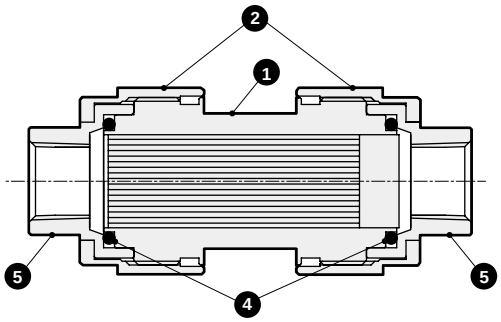

● Parts list

No.	Part name		Resin	Stainless steel
1	Element	Housing	Clear polyamide	Stainless steel
		Filter	Polypropylene	
		Filler material	Urethane	
2	Body		Polyamide	Stainless steel
3	Plug		Polyamide	-
4	O-ring		Fluoro rubber	Fluoro rubber (for clean-room specifications P90) Nitrile rubber (for clean-room specifications P94)
5	Cartridge fitting (Port size ø8, ø10, ø12)		Copper alloy (nickeling) Hydrogenated nitrile rubber	-
	Adaptor (Port size Rc1/4, Rc3/8, R1/4, R3/8)		Aluminum (alumite treatment)	Stainless steel

Dimensions

● Resin type

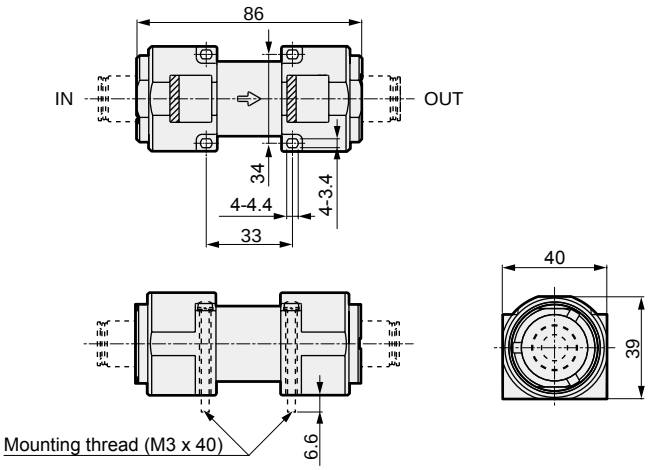

· Push-in fitting (ø8, ø10, ø12)

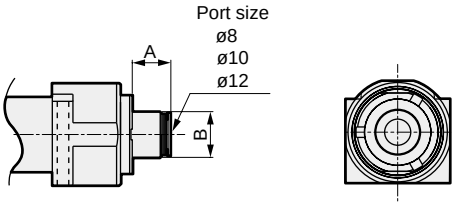

· Rc thread (Rc1/4, Rc3/8)

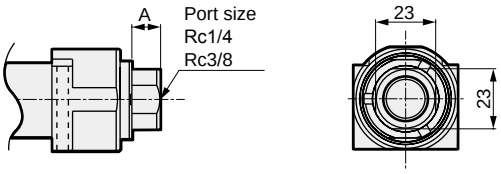

· R thread (R1/4, R3/8)

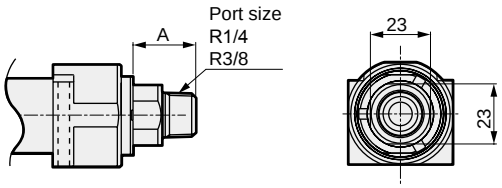

Connection model No.	Port size	A	B
H8	ø8 Push-in fitting	12	ø17.5
H10	ø10 Push-in fitting	14.5	ø17.5
H12	ø12 Push-in fitting	16	ø19.5
8A	R1/4	24	-
10A	R3/8	24	-
8	Rc1/4	11	-
10	Rc3/8	11	-

● Stainless steel

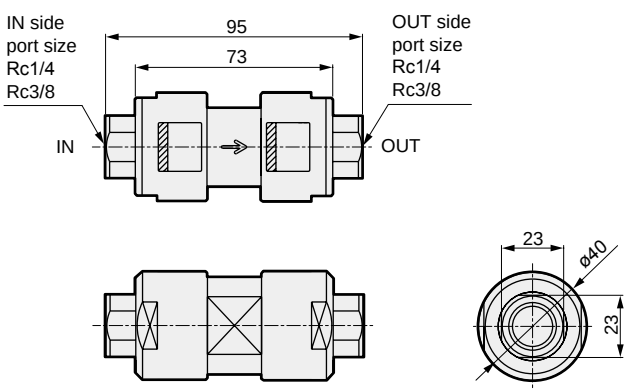

Applications and example of compatible circuit

● Application 1: Use as a precision filtration blow filter to filter out air and N_2 gas in order to provide clean air.

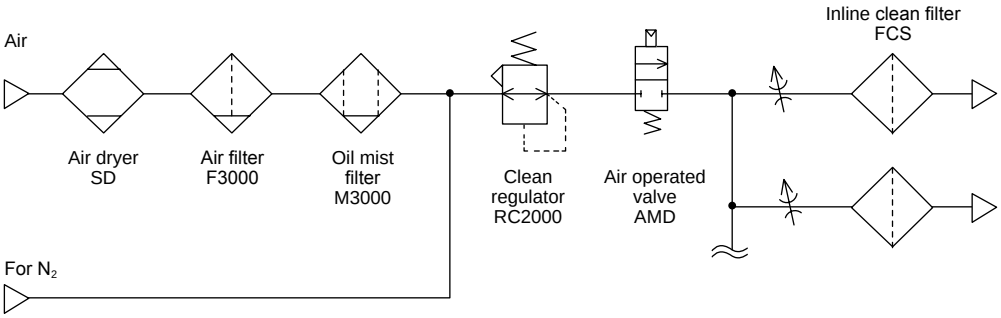

● Application 2: Use as a vacuum break filter for vacuum break circuit air blow and clean air supply.

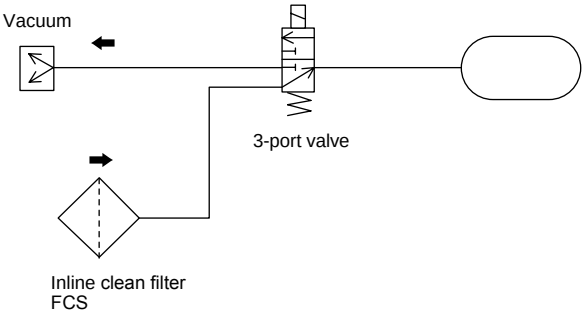

Customized products

Available as customized products. Contact CKD for details.

FCS500 Integrated connection

- This integrated connection with no sealed parts is ideal for leakage testers.
- Flow rate: 10 ℓ/min. (ANR) *1
- Port size: R1/8



FCS500 Large flow rate

- FCS500 Series increased flow rate specifications
- Flow rate: 100 to 120 ℓ/min (ANR) *1
- Port size: ø6, ø8 push-in fitting, R1/8, R1/4



FCS500 L type fitting

- L type push-in fitting saves space during piping
- Flow rate: 50 to 80 ℓ/min (ANR) *1
- Port size: ø4, ø6, ø8 radial push-in fitting



FCS1000 Stainless steel large flow rate

- Flow rate: 450 ℓ/min. (ANR) *1
- Port size: Rc1/4, Rc3/8

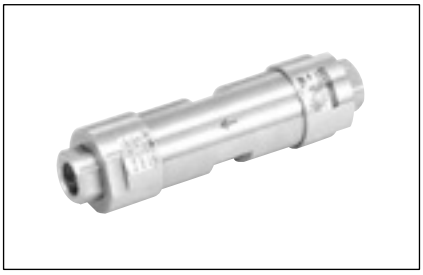

*1: Initial flow rate at primary pressure 0.7 MPa and pressure drop 0.03 MPa.
Contact CKD regarding other piping methods or bore sizes.

FCS Large flow rate and large bore size

- Flow rate: 2000 ℓ/min. (ANR) or more *2
- Port size: Rc1
- Body material: Aluminum (alumite treatment)



*2: Initial flow rate at primary pressure 0.7 MPa and pressure drop 0.03 MPa.
Contact CKD for other flow rates or bore sizes.

FAC Series

● Port size: ø4,ø6,ø8,ø10,R1/8,R1/4,R3/8
R1/2,Rc3/8,Rc1/2

Direct exhaust in clean rooms.

The innovative clean exhaust filter FAC Series with newly incorporated hollow fiber membrane structure allows the exhaust air in the pneumatic circuit to be cleaned with high precision. Direct exhausting is possible just by mounting this filter onto the exhaust port of devices in a Class 10 or below clean room. The conventional external exhaust is no longer required allowing piping work, space and costs to be dramatically improved.

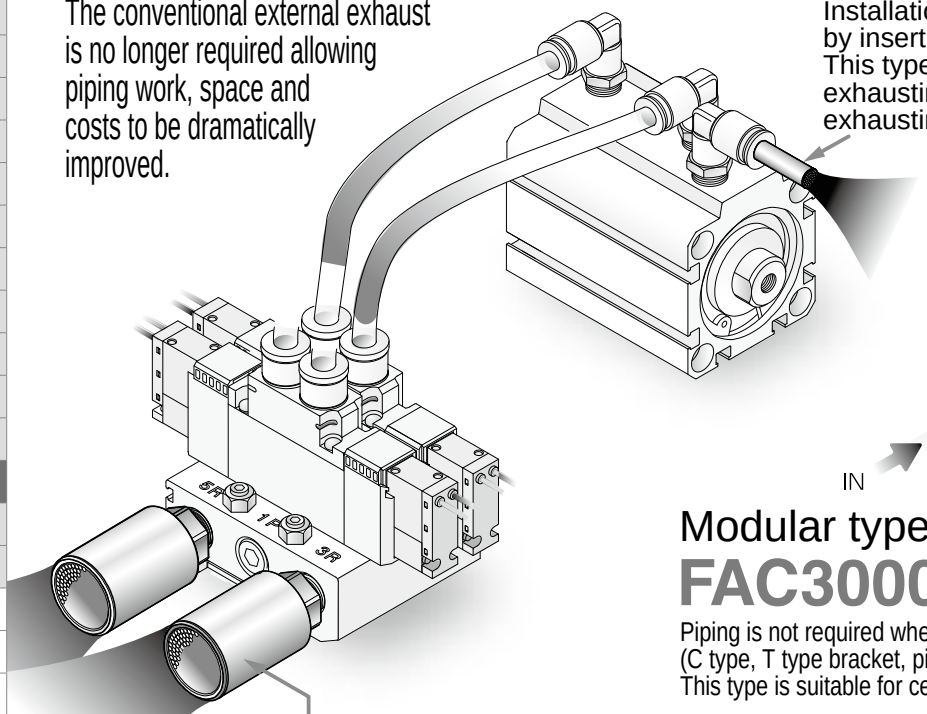

Plug type
FAC10 Series

Installation is completed just by inserting the plug in by hand. This type is suitable for exhausting cylinders and exhausting pilot air from valves.

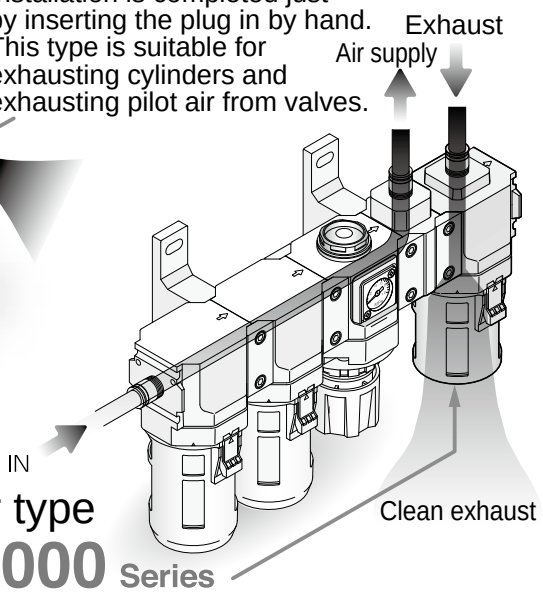

Modular type
FAC3000 Series

Piping is not required when this type is connected to other modular devices (C type, T type bracket, piping adaptor, distributor, etc.).
This type is suitable for central exhaust and large flow rate exhausting.

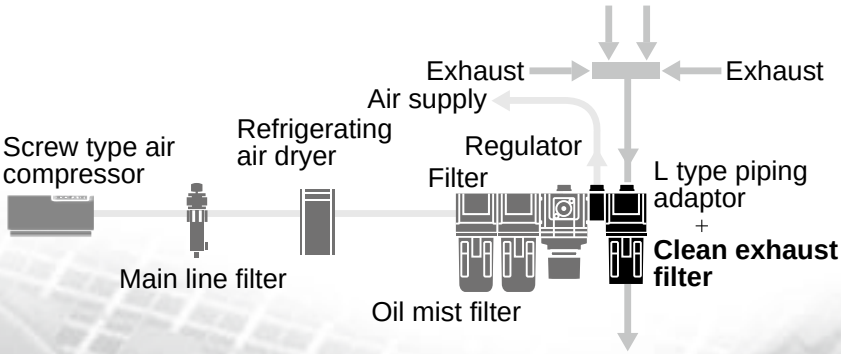

Silencer type
FAC100/200 Series

This male thread type is provided with a silencer function, and can be directly installed on the valve's R port.

* For installation, refer to the safety precautions (page 501).

Flow characteristics/FAC10

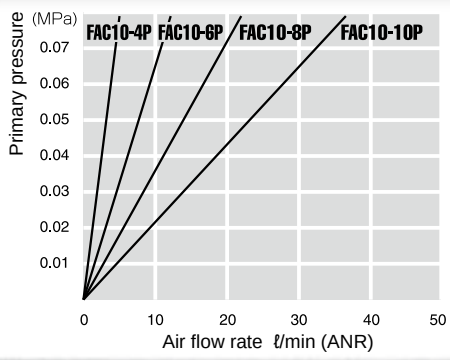

Flow characteristics/FAC100, FAC200, FAC3000

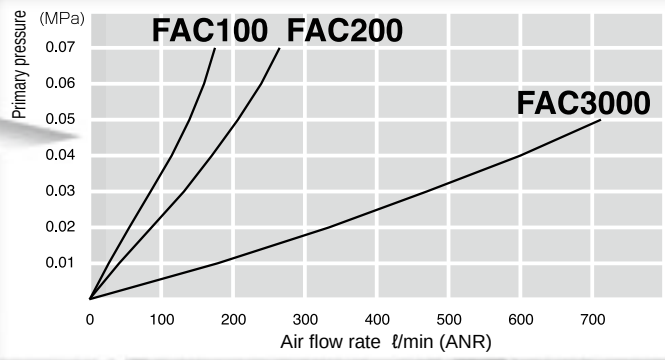

Revolutionary exhaust system for clean rooms

Precise filtration

0.01 μm filtration, 99.99% removal efficiency

High secondary cleanliness

99.99% of 0.1 μm and larger particles are removed
* Measurement conditions: 28.3 ℓ/min (ANR) flow rate

Cost reducing and space saving

The work, costs and space required for conventional external exhaust piping are eliminated.

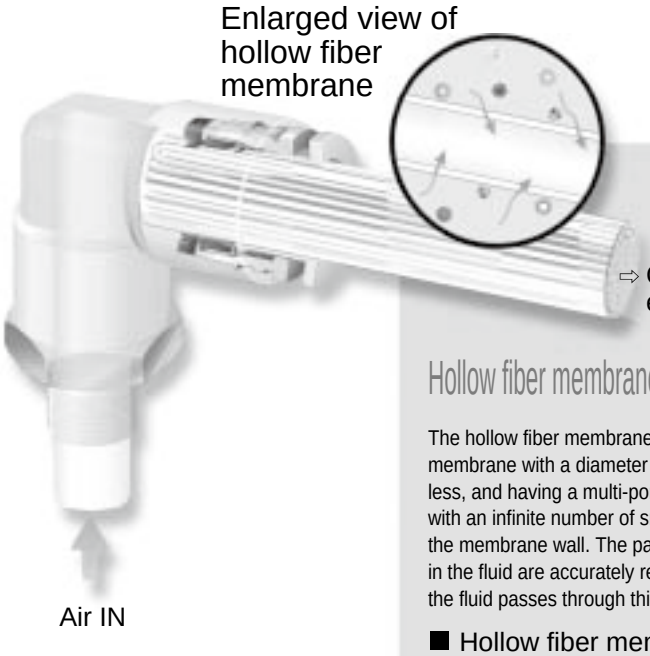

Hollow fiber membrane structure

The hollow fiber membrane is a tubular membrane with a diameter of 3 mm or less, and having a multi-porous structure with an infinite number of small holes on the membrane wall. The particles found in the fluid are accurately removed when the fluid passes through this membrane.

■ Hollow fiber membrane

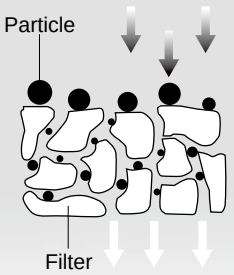

Simplified piping

All external exhaust piping can be eliminated by mounting the plug type on the cylinder and the silencer on the switching valve, thereby simplifying the piping.

Silencer function

The exhaust noise can be suppressed to 60dB (A) or less.

Ample variations

Three styles, the plug type, silencer type and modular type, as well as four flow rate series, 4 to 35, 100, 200 and 600 ℓ/min (ANR) are available.

Clean exhaust filter
FAC Series Variation

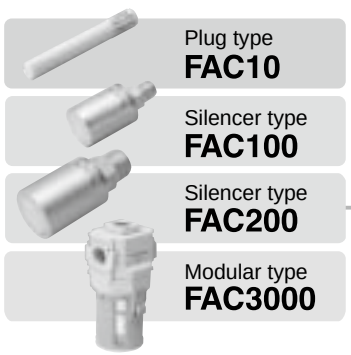

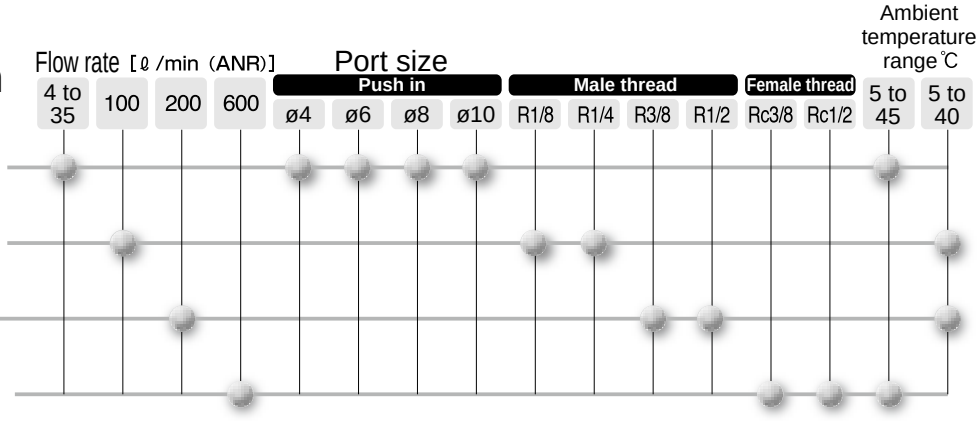

Precautions for selecting model

This is a high precision filtration type, so the flow rate is lower than the normal silencer and cleaner. Refer to each specification for details.

⚠ Read Safety Precautions to ensure correct, safe product use.



Clean exhaust filter

FAC10 Series

● Port size: ø4, ø6, ø8, ø10

RoHS CAD

Specifications

Model No.		FAC10-4P	FAC10-6P	FAC10-8P	FAC10-10P
Working fluid		Compressed air			
Max. working pressure	MPa	0.1 (≈15 psi, 1 bar)			
Min. working pressure	MPa	0 (≈0 psi, 0 bar)			
Proof pressure	MPa	0.3 (≈44 psi, 3 bar)			
Ambient / fluid temperatures	°C	5 (41°F) to 45 (113°F)			
Port size		ø4	ø6	ø8	ø10
Weight	g	2			3
Filtration rating	µm	0.01 (removal efficiency 99.99% and over)			
Secondary side cleanliness		0.1 µm or larger particles are completely (100%) eliminated *1			
Max. processing flow rate	ℓ/min(ANR)	4	10	20	35

*1: Maximum processing flow rate for measurement, or 28.3 ℓ/min. (ANR) when the maximum processing flow rate is 28.3 ℓ/min. (ANR) or more

How to order

FAC10 - 4P

Ⓑ Port size

Code	Description
Ⓑ Port size	
4P	ø4
6P	ø6
8P	ø8
10P	ø10

Flow characteristics

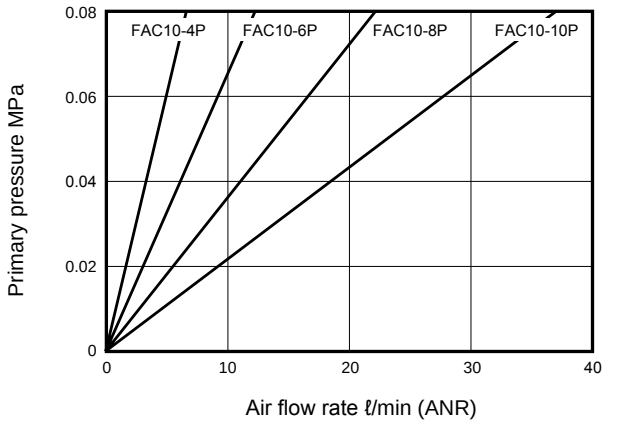

Noise level

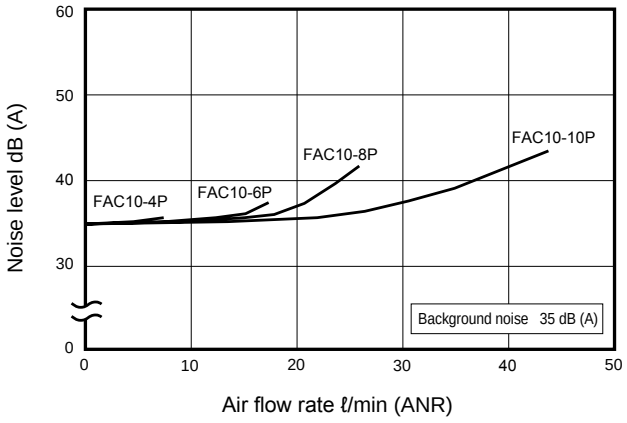

Selection guide

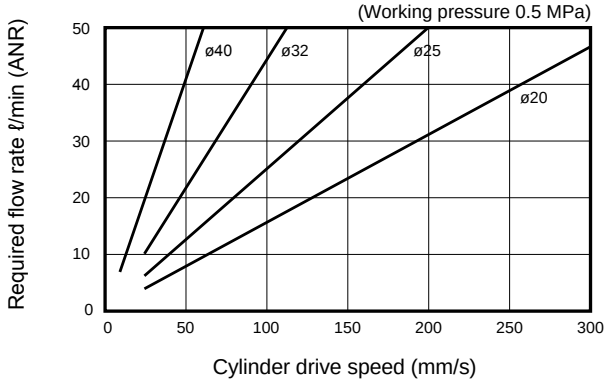

The clean exhaust filter model is selected based on the working circuit's required flow rate.
(1) Calculate the required flow rate for the actuator being used.
(2) Multiply the calculated required flow rate by 1.4.
(3) Select a model having a processing flow rate exceeding the required flow rate multiplied by 1.4.

The above graphs show the required flow rate multiplied by 1.4 for each air cylinder size. Use this graph to select a model.

Internal structure diagram and parts list/dimensions

● FAC10-4P

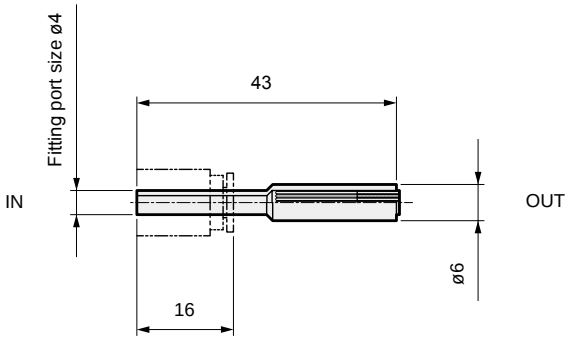

● FAC10-6P

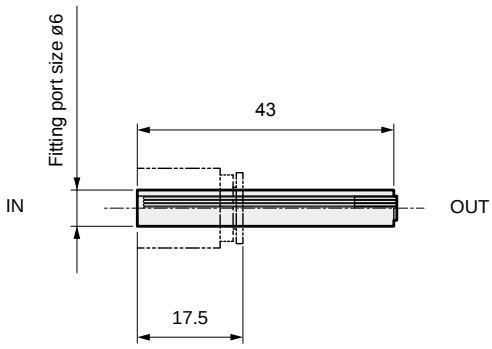

● FAC10-8P

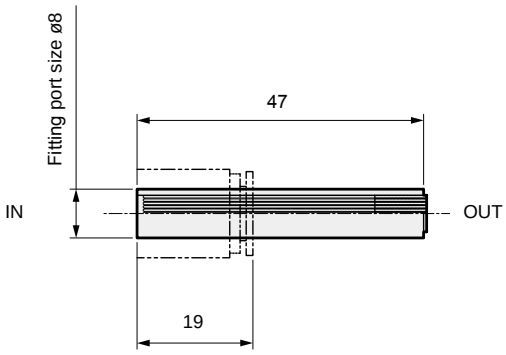

● FAC10-10P

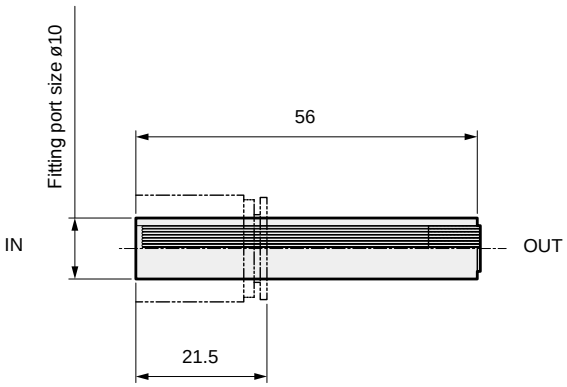

No.	Part name		Material
1	Body	Housing	Polyamide
		Filter	Polypropylene
		Filler material	Urethane

Cannot be disassembled

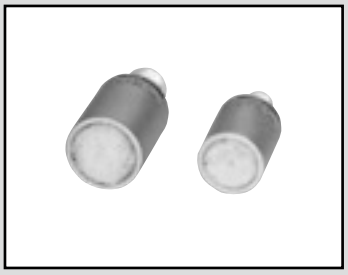

Clean exhaust filter

FAC100/FAC200 Series

● Port size: R1/8, R1/4, R3/8, R1/2

RoHS CAD

Specifications

Model No.		FAC100	FAC200
Working fluid		Compressed air	
Max. working pressure	MPa	0.1 (≈15 psi, 1 bar)	
Min. working pressure	MPa	0 (≈0 psi, 0 bar)	
Proof pressure	MPa	0.3 (≈44 psi, 3 bar)	
Ambient / fluid temperatures	°C	5 (41°F) to 40 (104°F)	
Port size		R 1/8,R1/4	R 3/8,R1/2
Weight	g	65	85
Filtration rating	μm	0.01 (removal efficiency 99.99% and over)	
Secondary side cleanliness		0.1 μm or larger particles are completely (100%) eliminated *1	
Max. processing flow rate	ℓ/min(ANR)	100	200

*1: Flow rate at the time of measurement: 28.3 ℓ/min (ANR).

How to order

FAC100 - **8A**

Ⓐ Model No. Ⓑ Port size

Code	Description	Ⓐ Model No. FAC100	Ⓐ Model No. FAC200
Ⓑ Port size			
6A	R1/8	●	
8A	R1/4	●	
10A	R3/8		●
15A	R1/2		●

Flow characteristics

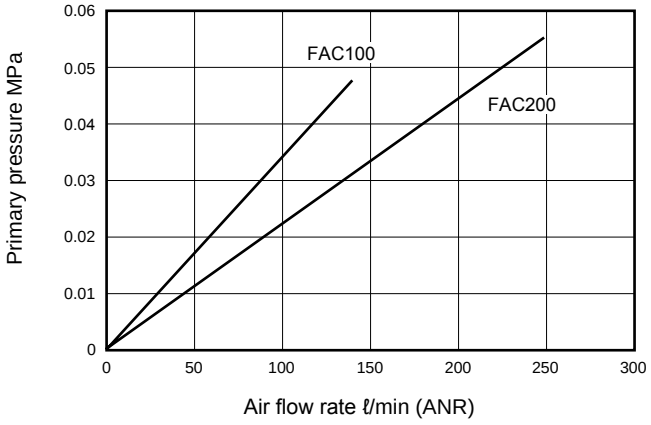

Noise level

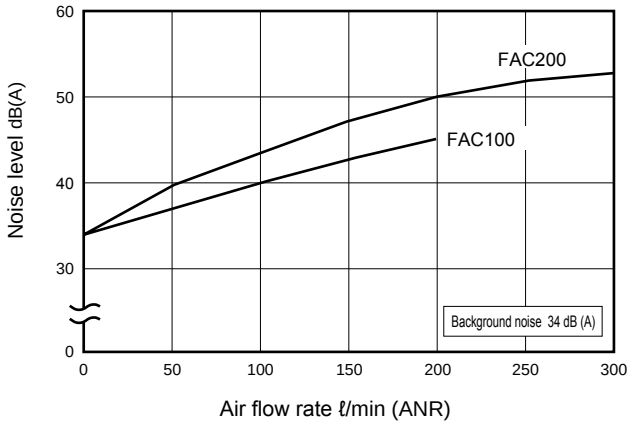

Selection guide

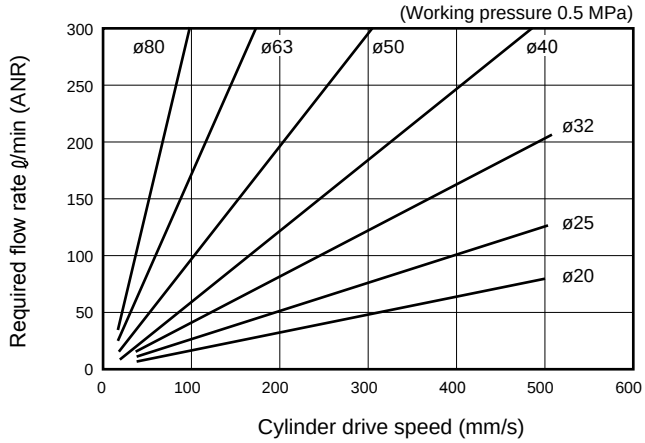

The clean exhaust filter model is selected based on the working circuit's required flow rate.
(1) Calculate the required flow rate for the actuator being used.
(2) Multiply the calculated required flow rate by 1.4.
(3) Select a model having a processing flow rate exceeding the required flow rate multiplied by 1.4.

The above graphs show the required flow rate multiplied by 1.4 for each air cylinder size. Use this graph to select a model.

Internal structure diagram and parts list/dimensions

● FAC100

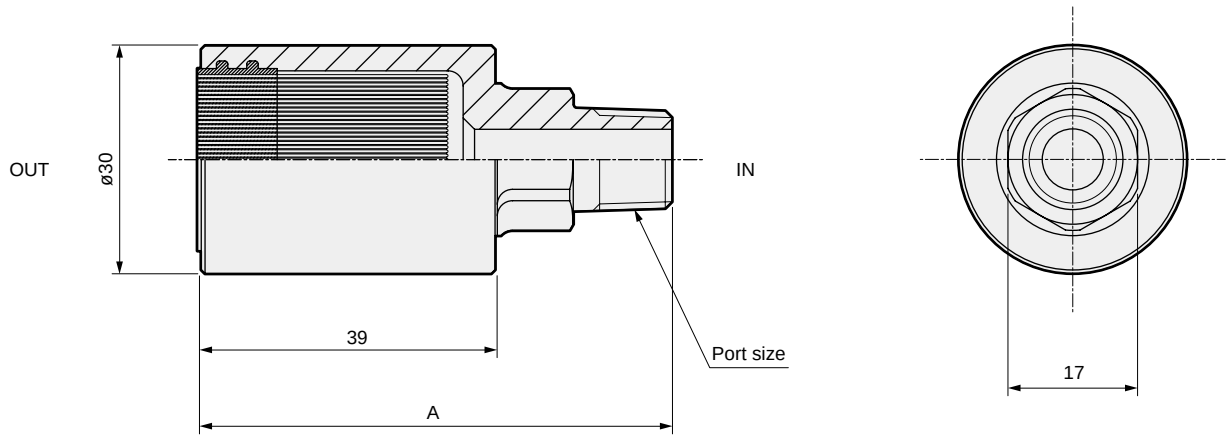

No.	Part name		Material
1	Body	Housing	Aluminum alloy (alumite treatment)
		Filter	Polypropylene
		Filler material	Urethane

Model No.	A	Port size
FAC100-6A	59	R1/8
FAC100-8A	62	R1/4

● FAC200

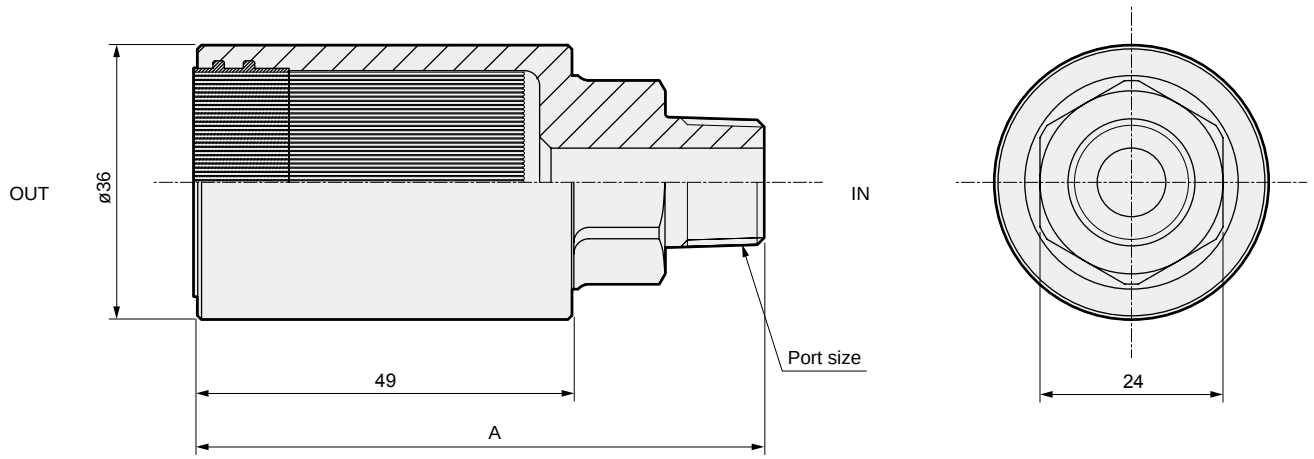

No.	Part name		Material
1	Body	Housing	Aluminum alloy (alumite treatment)
		Filter	Polypropylene
		Filler material	Urethane

Model No.	A	Port size
FAC200-10A	75	R3/8
FAC200-15A	78	R1/2

Cannot be disassembled



Clean exhaust filter

FAC3000 Series

● Port size: Rc3/8, Rc1/2

RoHS CAD

Specifications

Model No.		FAC3000
Working fluid		Compressed air
Max. working pressure	MPa	0.1 (≈15 psi, 1 bar)
Min. working pressure	MPa	0 (≈0 psi, 0 bar)
Proof pressure	MPa	0.3 (≈44 psi, 3 bar)
Ambient / fluid temperatures	°C	5 (41°F) to 45 (113°F)
Port size		Rc3/8,Rc1/2
Weight	kg	0.29
Filtration rating	μm	0.01 (removal efficiency 99.99% and over)
Attachment weight	kg	0.17
Secondary side cleanliness		0.1 μm or larger particles are completely (100%) eliminated *1
Max. processing flow rate	ℓ/min(ANR)	600

*1: Flow rate at the time of measurement: 28.3 ℓ/min (ANR).

How to order

FAC3000 - **10** - **B**

- FAC3000: Model No.
- 10: Ⓐ Port size
- B: Ⓑ Attachment

Code	Description
Ⓐ Port size	
10	Rc3/8
15	Rc1/2
Ⓑ Other attachments	
Blank	None
B	C type bracket: B320-P70

Note: Two attachments are included, one R1/8 plug and one plug corresponding to the connection port size (R3/8 or R1/2).

Model No. of single bracket

B320-P70

Flow characteristics

● FAC3000

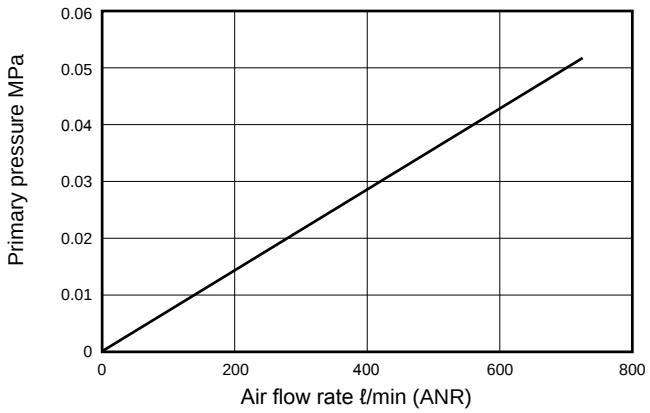

Noise level

● FAC3000

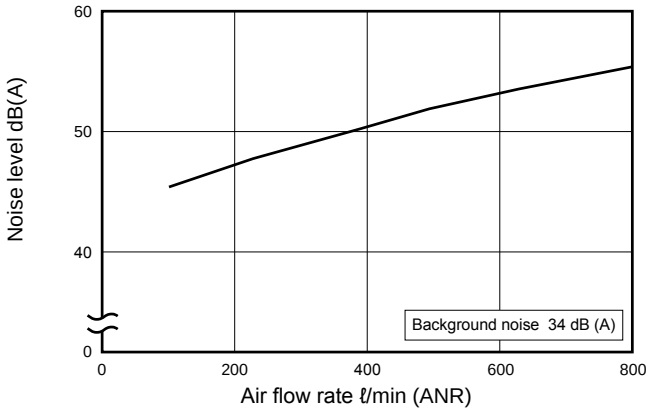

Selection guide

The clean exhaust filter model is selected based on the working circuit's required flow rate.
(1) Calculate the required flow rate for the actuator being used.
(2) Multiply the calculated required flow rate by 1.4.
(3) Select a model having a processing flow rate exceeding the required flow rate multiplied by 1.4.

The graph at right shows the required flow rate multiplied by 1.4 for each air cylinder size. Use this graph to select a model.

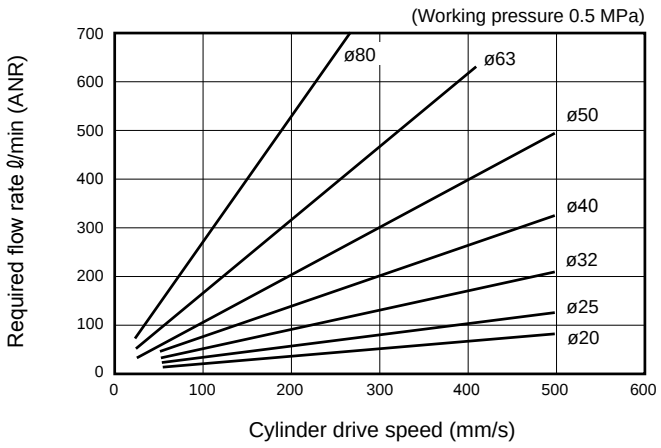

Internal structure and parts list

● FAC3000

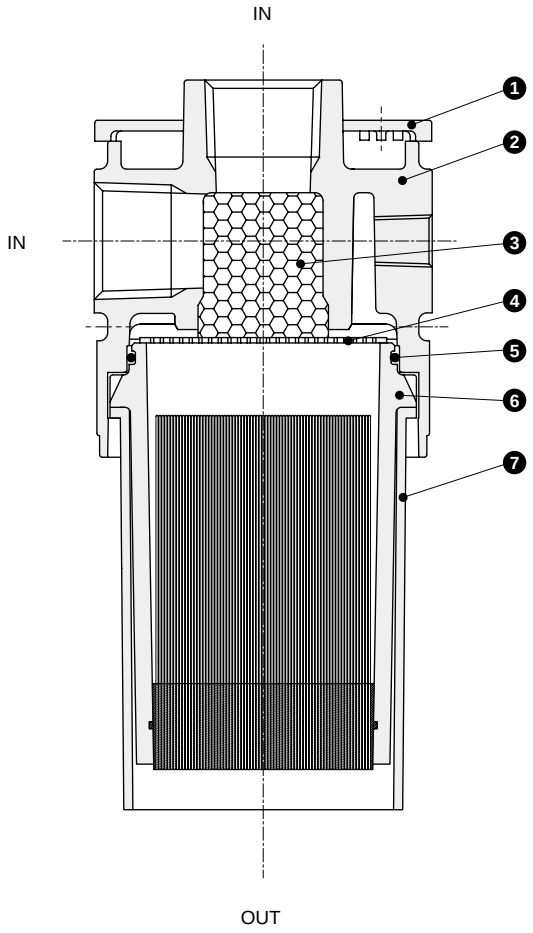

Cannot be disassembled

No.	Part name		Material
1	Plate cover		ABS resin
2	Body		Aluminum alloy die-casting
3	Sound insulation material		Vinylidene chloride
4	Rectification plate		Stainless steel
5	O-ring		Special nitrile rubber
6	Hollow fiber membrane element	Housing	Polycarbonate
		Filter	Polypropylene
		Filler material	Urethane
7	Bowl guard		Polyamide resin, stainless steel

Dimensions

● FAC3000

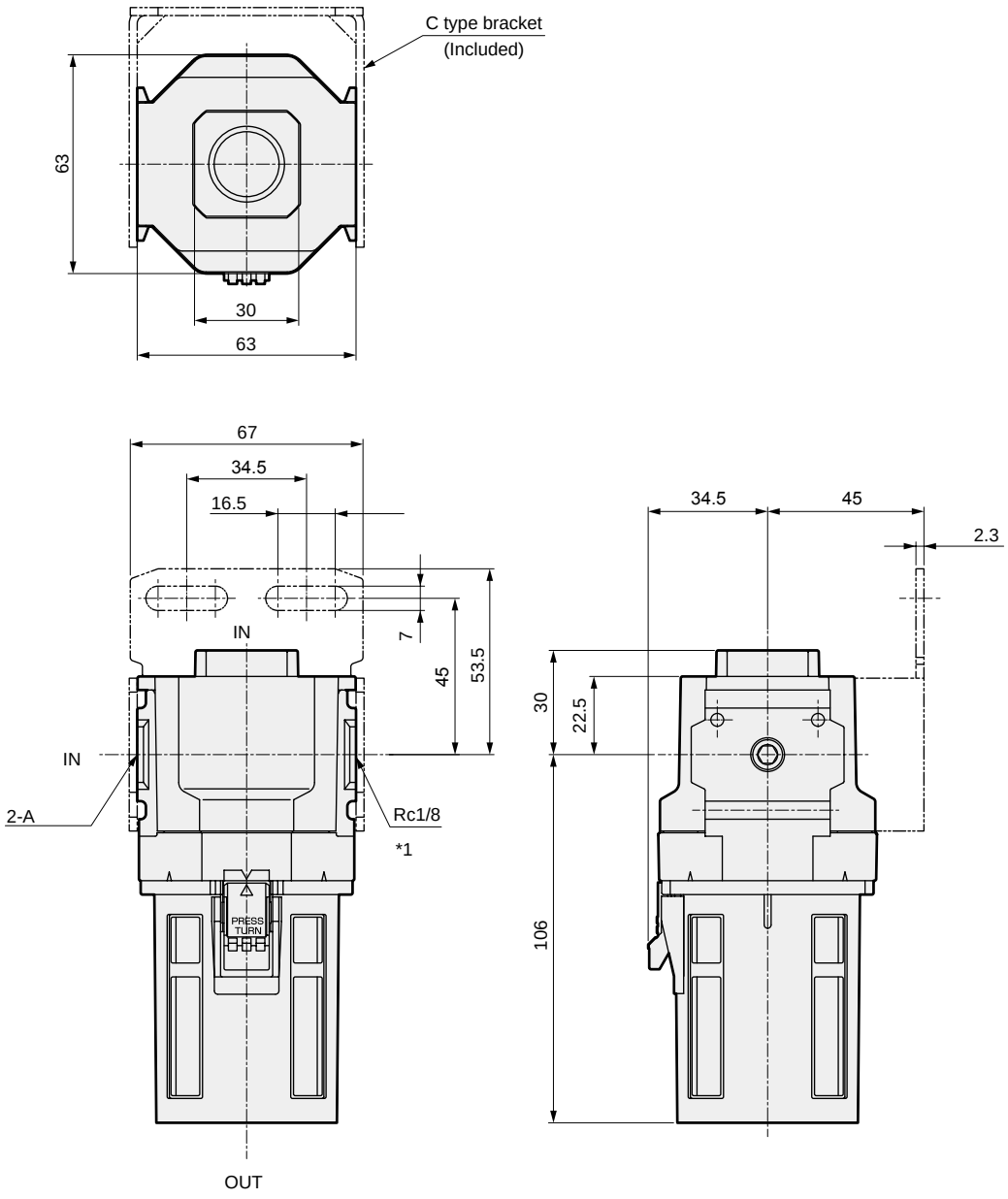

Model No.	A
FAC3000-10	Rc3/8
FAC3000-15	Rc1/2

*1: The Rc1/8 port can be used for treating air exhaust and monitoring element life. Replace the element when primary pressure exceeds 0.1 MPa. When not using this port, plug it with the R1/8 plug provided. Contact CKD for details on repair parts such as elements.

Customized products

Available as customized products. Contact CKD for details.

FAC10-M5

- Max. processing flow rate: 2 ℓ/min (ANR) or more
- Port size : M5
- Body material : Stainless steel



FAC10-6

- Max. processing flow rate: 4 ℓ/min (ANR) or more
- Port size : R1/8
- Body material : Stainless steel



MEMO



Clean regulator

RC2000 Series

● Port size: Rc1/4, Rc3/8, Rc1/2

JIS symbol

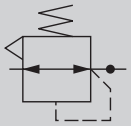

RoHS CAD

Overview

With its oil-prohibited specifications and stainless steel body, the RC2000 is ideal for clean air and N_2 pressure control in semiconductor manufacturing equipment and liquid crystal device manufacturing equipment. The compact body and large flow rate capacity are suitable for air (N_2) blowing.

Features

● Oil-prohibited specifications
Precision cleaning is performed on the gas contact parts, and the manufacturing processes from assembling to packaging are completed in clean rooms. No grease is used in gas-contacting parts.

● Compact/large flow rate
A large flow rate of 0.8 m^3/min. is realized even with just 50 mm face to face. (Flow rate at 0.7 MPa primary pressure, 0.5 MPa set pressure, 0.1 MPa pressure drop)

● Reverse function (when back pressure is not applied)
This function reverses secondary pressure to the primary side when primary pressure is exhausted. This safety-oriented product has no residual pressure on the secondary side.

Specifications

Model No.		RC2000-8-P90	RC2000-10-P90	RC2000-15-P90
Working fluid		Compressed air, N_2		
Max. working pressure	MPa	1.0 (≈150 psi, 10 bar) (0.5 (≈73 psi, 5 bar) for low pressure)		
Proof pressure	MPa	1.5 (≈220 psi, 15 bar)		
Ambient / fluid temperatures	°C	5 (41°F) to 60 (140°F)		
Set pressure range	MPa	Standard: 0.05 (≈7.3 psi, 0.5 bar) to 0.7 (≈100 psi, 7 bar) Low pressure: 0.02 (≈2.9 psi, 0.2 bar) to 0.2 (≈29 psi, 2 bar) *1		
Port size (IN/OUT)		Rc1/4	Rc3/8	Rc1/2
Pressure gauge port size		Rc1/8		
Gas contact part materials	Metal	SUS316		
	Resin	PTFE		
	Rubber	FKM		
Assembling/inspection/packaging		Integrated production in cleanroom		
Cleaning (gas contact part)		Precision cleaning		
Weight	kg	0.47	0.45	0.59
Attachment weight	g	G¼9:90,B3:40,E1:5		

*1: When using the standard with a set pressure of 0.4 MPa or less, confirm that the primary pressure difference for the set pressure is within 0.5 MPa. When using the low pressure type, confirm that the primary pressure difference for set pressure is within 0.3 MPa.

How to order

RC2000 - 8 - LN - GY49B3E1 - P90

Model No. (clean-room specifications) (oil-prohibited specifications)

A Port size

8	Rc1/4
10	Rc3/8
15	Rc1/2 (Made to order)

B Option *1

Pressure range *2	Blank	0.05 to 0.7 MPa
	L	0.02 to 0.2 MPa
Relief mechanism	Blank	Relief
	N	Non-relief

C Other attachments *1, *3

Blank	None
GY49	Pressure gauge (G49D-6-□-P94)
GZ49	Pressure gauge (G49D-6-□-P90)
B3	L-bracket
E1	Fitting (for exhaust port)

D Clean-room specifications

	Treatment
P90	SS used Oil-prohibited

*1: When selecting multiple options or attachments, indicate the model No. code in order starting from the top. If option or attachment is left blank, delete the hyphen "-". (Example: RC2000-8-P90)
2: If "Blank" is selected for the pressure range, the 1.0 MPa pressure gauge (pressure gauge model: G49D-6-P10-P9) is used. If "L" is selected for the pressure range, the 0.2 MPa pressure gauge (pressure gauge model: G49D-6-P02-P9*) is used.
*3: Two pipe plugs (R1/8) are included with the product. If a pressure gauge is selected as an attachment, one plug is included.

Flow characteristics

● RC2000-8-P90

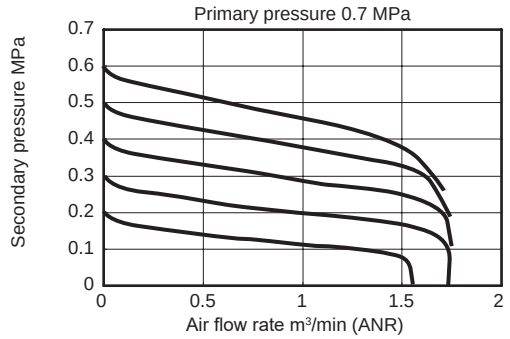

● RC2000-10-P90

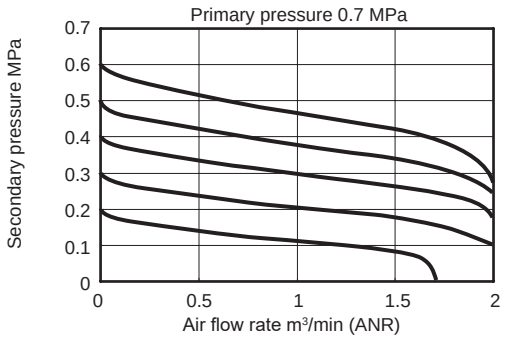

● RC2000-15-P90

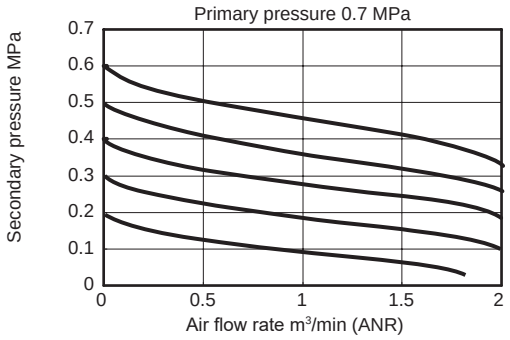

Flow characteristics (low pressure)

● RC2000-*-L-P90

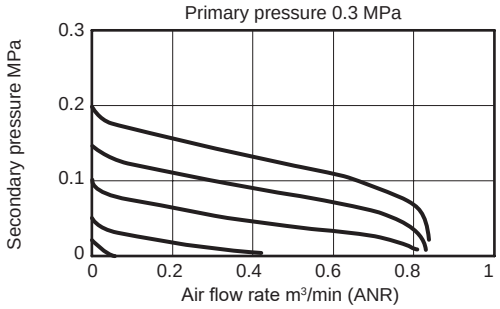

Pressure characteristics

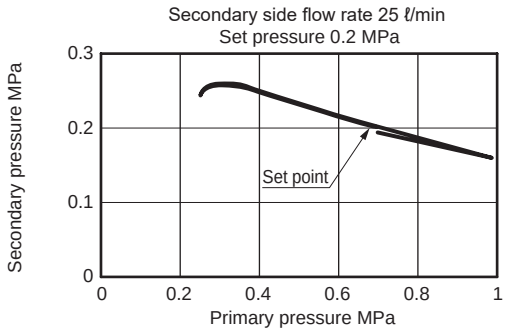

Internal structure and parts list

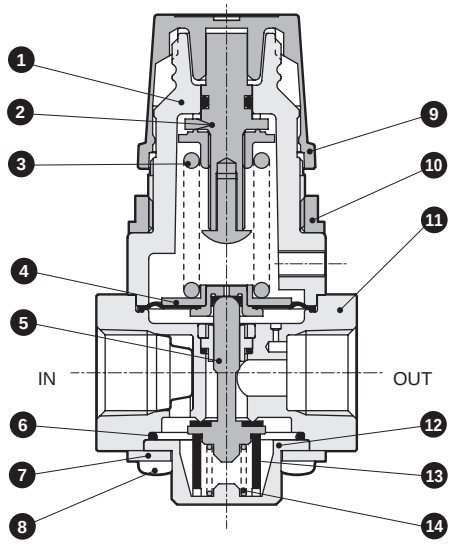

No.	Part name	Material (treatment)
1	Cover	PA66
2	Pressure adjusting screw assembly	Steel, SUS, FKM, POM
3	Spring	Steel
4	Diaphragm	SUS316, FKM, SUS303
5	Valve	SUS316, FKM
6	O-ring	FKM
7	Plate	SUS304
8	Thread	Steel (nickel plating)
9	Knob	POM
10	Mounting nut	Zinc die-casting (nickel plating)
11	Body	SUS316, FKM, PTFE
12	Bottom cap	SUS316
13	Bottom rubber	FKM
14	Spring	SUS316

* A mesh filter is installed on IN sides of RC2000-8-P90 and RC2000-10-P90.

Cannot be disassembled

Dimensions

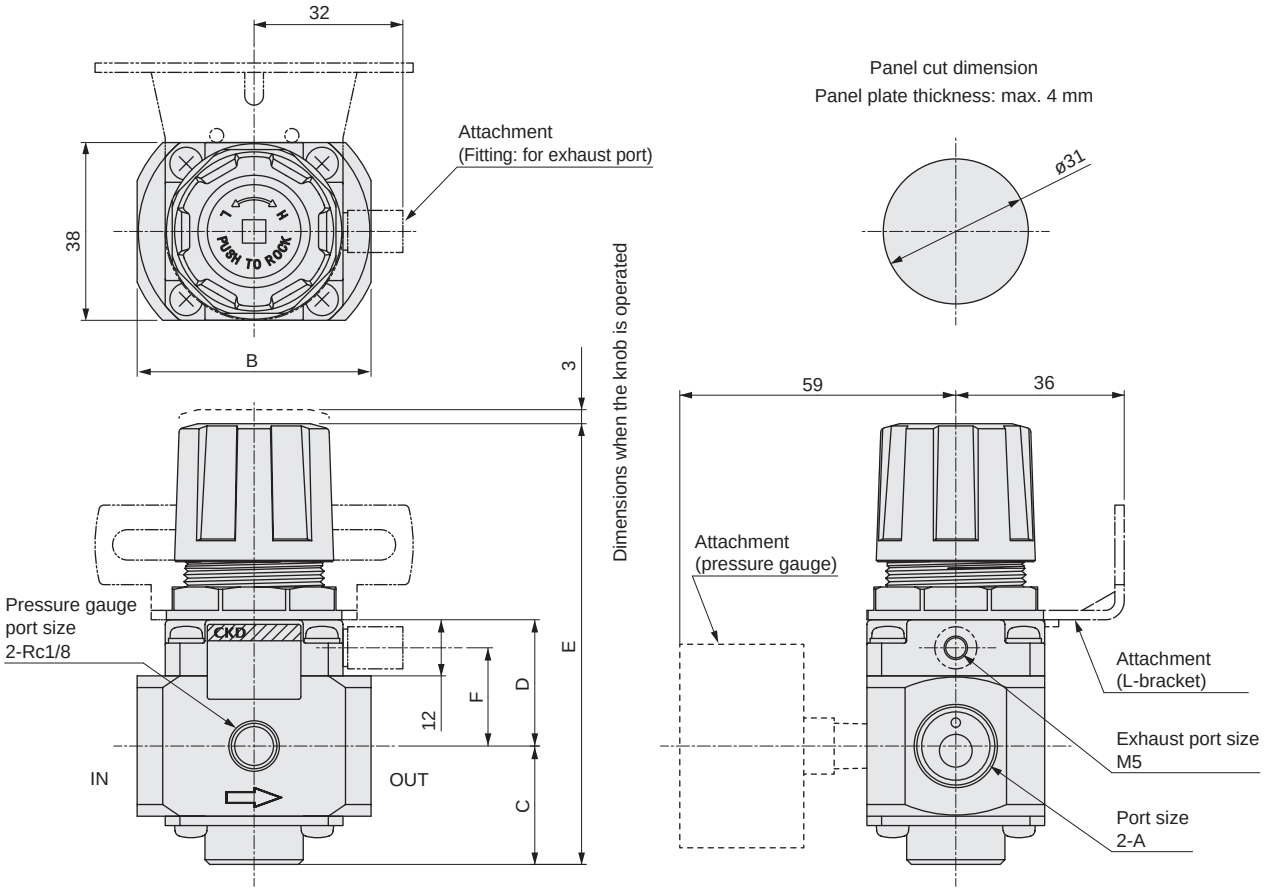

Model No.	A	B	C	D	E	F
RC2000-8	Rc1/4	50	25.5	27	95	21
RC2000-10	Rc3/8					
RC2000-15	Rc1/2	58	27.5	29	99	23

Attachment

● L-bracket (-B3)
Part model No.: RC2000-B3
· Material: Steel
Nickel plating treatment

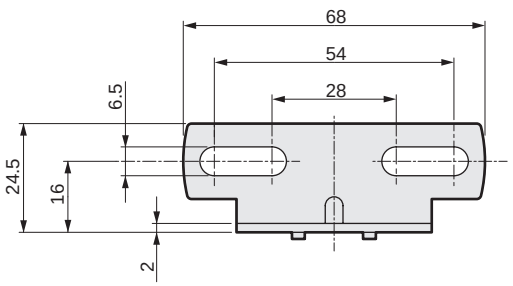

Fitting (-E1)
Part model No.: RC2000-E1

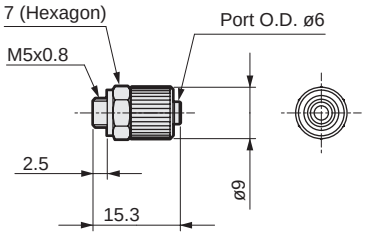

Model No.	RC2000-E1
Working fluid	Compressed air, N_2
Fluid temperature °C	5 to 60
Ambient temperature °C	5 to 60
Tube used	Urethane tube

Part material	Material (treatment)
Metal parts	Copper alloy (nickel plating)
Rubber parts	NBR

Customized product

Available as a customized product. Contact CKD for details.

RC Large flow rate and large bore size

- Flow rate : 3000 ℓ/min(ANR) *1
- Port size : Rc3/4, Rc1



*1 Flow rate at 0.7 MPa primary pressure, 0.5 MPa set pressure and 0.1 MPa pressure drop.



Regulator

2619 Series

● Port size: Rc1/8, Rc1/4

JIS symbol

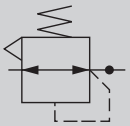

RoHS

Specifications

Item	2619-1C/2C-P80	2619-1C/2C-P90/P94
Working fluid	Compressed air	
Max. working pressure MPa	2.06 (≈300 psi, 20.6 bar)	1.0 (≈150 psi, 10 bar)
Proof pressure MPa	3.09 (≈450 psi, 30.9 bar)	1.5 (≈220 psi, 15 bar)
Ambient / fluid temperatures °C	5 (41°F) to 60 (140°F)	
Set pressure range MPa	0.04 (≈5.8 psi, 0.4 bar) to 0.83 (≈120 psi, 8.3 bar)	
Pressure relief	With relief mechanism	
Gauge port size Rc	1/8	
Port size Rc	1/8 / 1/4	1/8 / 1/4
Weight kg	0.27	0.42
Weight of included product g	G:90,B:40	

How to order

2619 - 1 C - L B - P80

- Model No.
- Ⓐ Port size
- Ⓑ Regulator
- Ⓒ Included product
- Ⓓ Clean-room specifications *2

Code	Description	
Ⓐ Port size		
1	Rc1/8	
2	Rc1/4	
Ⓑ Regulator		
Blank	Standard	
N	Without relief mechanism	
L	Low pressure (0.04 to 0.34 MPa)	
Ⓒ Included product		
Blank	None	
G	Pressure gauge	*1
B	Bracket	
Ⓓ Clean-room specifications		
	Structure/treatment	Material limitations
P80	Oil-prohibited	-
P90	Stainless steel material used Oil-prohibited	-
P94	Stainless steel material used Oil-prohibited	Use of CU/Si/halogen-based material (e.g. fluorine/chlorine/bromine) not possible

⚠ Precautions for model No. selection

*1: The clamp fitting and pipe plug are included.
*2: " P94 " is made to order.

*1: The following pressure gauge is included:

Model	Standard pressure	"L": Low pressure option
2619-□-P80	G49D-6-P10-P94	G49D-6-P04-P94
2619-□-P90	G49D-6-P10-P90	G49D-6-P04-P90
2619-□-P94	G49D-6-P10-P94	G49D-6-P04-P94

Model No. of single bracket

2619-B-P80

Internal structure and parts list

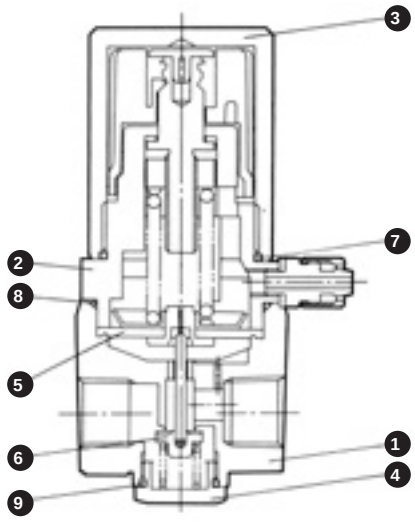

Cannot be disassembled

Parts list

No.	Main part	Material (Treatment)		
		2619-*-P80	2619-*-P90	2619-*-P94
1	Body	Aluminum alloy die casting (Painted)	Stainless steel	Stainless steel
2	Bonnet	Zinc alloy die casting (Painted)	Zinc alloy die casting (Painted)	Zinc alloy die casting (Painted)
3	Cap	Aluminum (Alumite treatment)	Aluminum (Alumite treatment)	Aluminum (Alumite treatment)
4	Bottom plug	Aluminum (Alumite treatment)	Stainless steel	Stainless steel
5	Diaphm Assy	Fluoro rubber/stainless steel	Fluoro rubber/stainless steel	Nitrile rubber/stainless steel
6	Valve assembly	Fluoro rubber/stainless steel	Fluoro rubber/stainless steel	Nitrile rubber/stainless steel
7	O-ring	Nitrile rubber	Nitrile rubber	Nitrile rubber
8	O-ring	Nitrile rubber	Nitrile rubber	Nitrile rubber
9	O-ring	Fluoro rubber	Fluoro rubber	Nitrile rubber

Dimensions

● 2619-P80

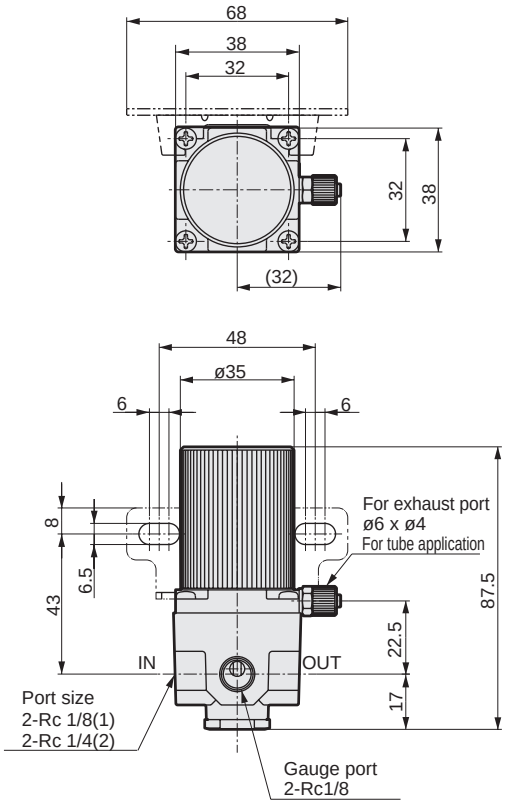

● 2619-P90/P94

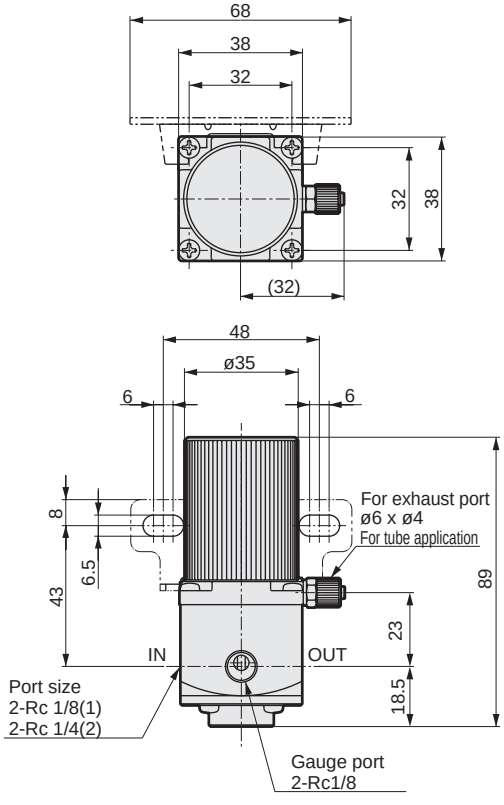

Bracket dimensions

● 2619-B-P80

Bracket thickness 2 mm

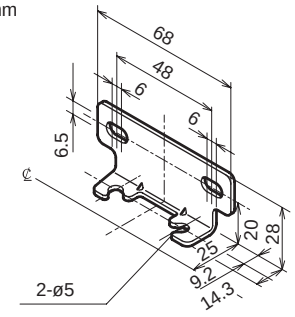

● Screw included

・Material: Steel
Nickel plated

Flow characteristics

● 2619-1C-P80/P90/P94

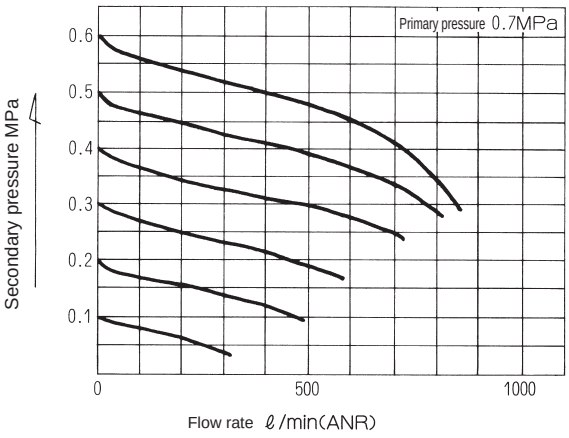

● 2619-2C-P80/P90/P94

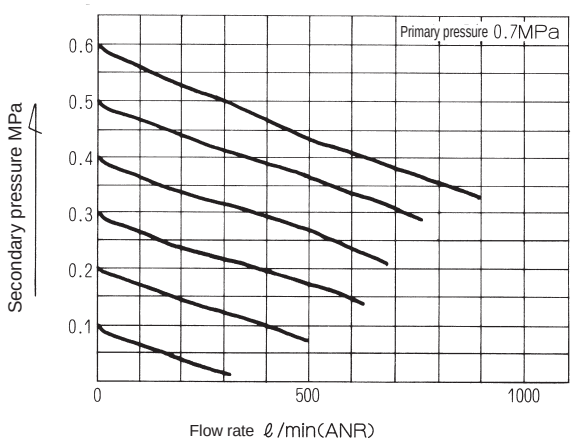

● 2619-1C-L-P80/P90/P94

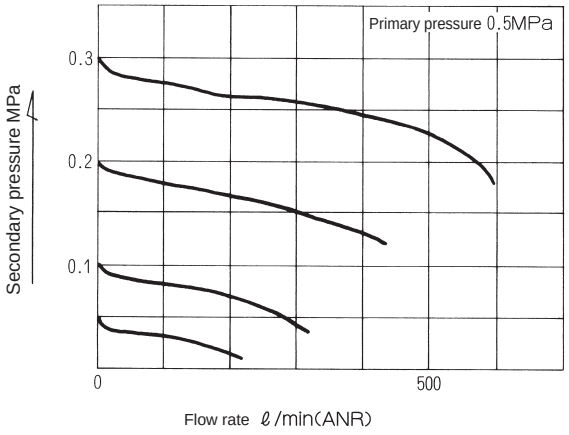

● 2619-2C-L-P80/P90/P94

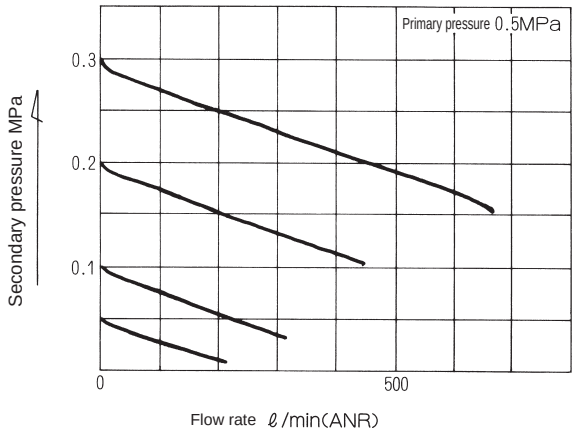

Pressure characteristics

● 2619-*-P80/P90/P94

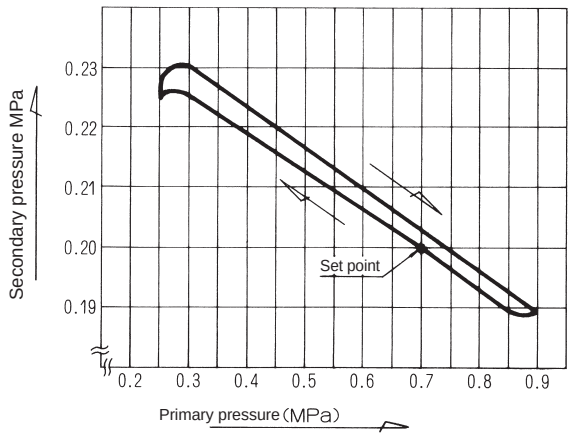

Pneumatic components (clean filter/clean exhaust filter/regulator)

Safety precautions

Be sure to read this section before use.
Refer to Intro Page 63 for general precautions regarding pneumatic components and refer to "⚠ Safety precautions" for detailed precautions for individual series.

Product-specific cautions: Clean filter/clean exhaust filter/clean regulator Series

Design/selection

1. Common

⚠WARNING

- Use the product in the range of conditions specified for the product.
- This product is designed for industrial use. Do not use for medical purposes, or in any equipment or circuit that concerns human life.

2. FCS Series

⚠WARNING

- Do not use this product in an atmosphere containing organic solvents or chemicals, etc., or where the product may come in contact with these substances. Not observing this could damage the polyamide housing. Use the stainless steel model in these environments.

⚠CAUTION

- Check the working circuit and working fluid.
  To prevent drop in filter performance, install the dryer, air filter and oil mist filter on the primary side, and remove water or oil.
- Do not exceed maximum working or differential pressure.
  Not observing this could damage the product or element membrane.
- Do not flow over the max. processing flow rate.
  Doing so may degrade the filtration accuracy and damage the element membrane.
- This device cannot be used as an absolute filter.
  Filtration accuracy of FCS500 is 99.99% within specified conditions.
  Do not use for applications where foreign matter is absolutely prohibited (e.g., direct blowing on wafers).
- Do not use where the IN/OUT pressure differential exceeds 0.1 MPa.
  Suddenly supplying air to the filter by blowing air with secondary side released to atmospheric pressure, etc., could make removal inefficient. In this case, install a restriction valve on the filter's IN side to keep the pressure difference to 0.1 MPa or less.
- Alcohol is used in the manufacturing line of some parts of this product.

3. FAC Series

⚠WARNING

- Piping load torque
  If load or torque is applied to the body and piping when connecting pipes, the piping part may be damaged, so use the product within required torque.
  Do not apply lateral load to FAC10.

	FAC100	FAC200	FAC3000
Max. torque N·m	15	50	50

⚠CAUTION

- Check the working circuit and working fluid.
  Install dryer, air filter and oil mist filter on the pneumatic source side to remove water and oil.
- Water droplets cannot be removed.
  The hydrophobic element membrane does not circulate non-pressurized water. When pressurized, water flows to the discharge side.
- Use the product within maximum working pressure and working temperature ranges.
  If any sources of heat are present near devices, check that the product's working temperature range is not exceeded. Not observing this could damage the product or element membrane.
- Do not flow over the max. processing flow rate.
  Calculate the processing flow rate of solenoid valve and actuator, and select a model not exceeding the maximum processing flow rate. Circulating air exceeding the max. processing flow rate could reduce the cleanness of exhaust air and damage the element membrane.
- Install where the device is not adversely affected by flying dust.
- Do not install where exhaust air blows directly onto the workpiece, etc.
  Contact CKD when using this device for filtering.
- For common piping, the solenoid valve may malfunction due to back-flow. If this occurs, attach a check valve to prevent back-flow.
  Refer to the flow characteristics table in the catalog to check the relationship of the processing flow rate and primary side pressure, and use within a range and circuit that are not affected by back-flow on the primary side.
- Do not use a clean exhaust filter if the supplied pressure is more than 0.1 MPa.
  If compressed air of 0.1 MPa or over is supplied to a clean exhaust filter, removal efficiency may suffer.
- Alcohol is used in the manufacturing line of some parts of this product.

4. RC2000/2619

⚠WARNING

- Output pressure exceeding the regulator's set pressure could result in damage or faulty operation of the secondary side devices. Be sure to install a safety device.
- As the regulator may not always be usable with the secondary side sealed circuit or balance circuit, consult with CKD.
- Piping load torque
  Avoid applying piping load or torque to the body or pipes.

	Rc 1/8,Rc 1/4	Rc 3/8,Rc 1/2,Rc 3/4	Rc1 or higher
Max. torque N·m	15	50	100

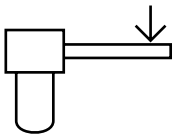

⚠CAUTION

- Check the working circuit and working fluid.
  Circulating fluids containing solids or non-specified fluids could cause malfunctions. Connect a filter to the product's primary side so that solid matter does not enter.
- Pulsations may occur depending on the usage conditions and piping conditions.
  If pulsation is generated, lower the primary side pressure or restrict the secondary line.
- When the primary pressure is released, the secondary pressure flows to the primary side.
  If a problem occurs in another device due to the inflow of secondary-side fluid to the primary side, provide a circuit to retain the pressure.
- If left for a long time with the primary pressure released, pulsation may be generated depending on the working and piping conditions.

Mounting, installation and adjustment

1. Common

⚠CAUTION

- Open the package in a cleanroom.
  This product is packed in a cleanroom. The package should be opened just before piping in the cleanroom.
- Install the product where it is not exposed to direct sunlight.
- Flush and clean the pipes.
  Dirt or foreign matter remaining in the piping will deteriorate product performance.
- Make sure that no foreign matter enters the pipes when connecting the pipes and fittings.
  When screwing in piping or fittings, check that swarf from port threads or sealant does not get inside. Dirt or foreign matter remaining in the piping will deteriorate product performance.
- Match the flow direction and the direction of the arrow on the product for correct connection.
  The RC2000 does not operate correctly if installed in reverse. With the FCS Series/FAC Series, service life is shortened.
- Securing maintenance space
  Secure sufficient space for maintenance and inspection.
- Do not install this product in a location where it may be subject to vibrations or shocks.
- High moisture levels
  Install the air dryer and drain separator before the air filter. If there is a lot of moisture from the compressor, hot and highly humid air could shorten the device's life or result in corrosion.
- Water-lubricated compressor circuit
  Take measures to prevent chlorine-based substances from entering the compressed air.

2. FCS Series

⚠CAUTION

- Perform piping so no excessive force is applied to the product.
  When piping or installing, do not apply tension, compression, bending or external force from tubes, etc.
- Select the appropriate piping tube.
  Use the CKD soft nylon tube and the urethane tube.
  Contact CKD regarding other fluorine resin tube, etc.
- Securely insert a tube into the push-in fitting before use.
- Use the width across flats of the connection part when piping.
  In the case of R thread or Rc thread piping, apply the wrench to the width across flats of the connection part. Do not apply it to any other part when tightening.
- Use appropriate torque to tighten the pipes when connecting them.

Port thread	Tightening torque N·m
M5	1 to 1.5
Rc1/8,R1/8	3 to 5
Rc1/4,R1/4	6 to 8
Rc3/8,R3/8	13 to 15

Mounting, installation and adjustment

⚠CAUTION

■ When supplying compressed air after connecting pipes, do not suddenly apply high pressure.
Connected piping could be dislocated and tubing could fly off.

■ When using male thread piping for both IN and OUT sides, confirm that the piping does not apply lateral load or bending torque during installation.
Otherwise, leakage may occur.

3. FAC Series

⚠CAUTION

■ Do not apply excessive force to the product when connecting the piping.
When piping, do not apply tension, compression, bending or other forces from the piping.

■ Use appropriate torque to tighten the pipes when connecting them. (The following table shows the recommended torque values.)

Port thread	Tightening torque N·m
R1/8	3 to 5
R1/4	6 to 8
R3/8,Rc3/8	13 to 15
R1/2,Rc1/2	16 to 18

■ Tighten the hexagonal face when piping. (FAC100, FAC200)

■ The direct mount of individual wiring manifold of M4GA/M4GB Series supports direct connection. Mask the port P on the port R side with FAC mounted and supply air from the port P on the opposite side.

Model No.	FAC100	FAC200
M4GA1	○	
M4GA2	○	
M4GB2	○	
M4GA3		○
M4GB3		○

- Direct connection of discrete type and direct mounting to DIN rail is not possible.
- Note that the external dimensions of FAC are larger than those of the bottom of the manifold base.

4. RC2000

⚠CAUTION

■ Open the package in a cleanroom.
This product is packed in a double layer in a cleanroom. Open the first layer and take the product into the cleanroom. Open the second layer just before piping.

■ When the panel mounting nut is loosened, the nut acts as a jack and enables the knob to be removed easily. Install the nut before installing the knob.

5. RC2000/2619

⚠CAUTION

■ Use appropriate torque to tighten the pipes when connecting them. (The right table shows the recommended tightening torque values.)

Port thread	Tightening torque N·m
M5	1.0 to 1.5
Rc1/8	3 to 5
Rc1/4	6 to 8
Rc3/8	13 to 15
Rc1/2	16 to 18

■ Use a pressure gauge and pipe plug to block the pressure gauge connection port.

■ When using regulators in parallel as below, do not use the OUT side as a closed circuit. If a closed circuit is required, install a check valve on the OUT side of each regulator.

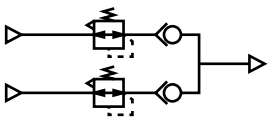

Use/maintenance

1. Common

⚠CAUTION

- Do not disassemble or modify the product.
- Before conducting maintenance, stop the supply of the fluid and make sure that there is no residual pressure.
- Read the instructions and precautions enclosed with the product before use or maintenance.
- Storage
  Do not store this product in a hot, humid atmosphere or atmospheric conditions outside of the specified range for a prolonged period of time. Resin or rubber parts could deteriorate, and the resin element housing could become discolored. Contact CKD when storing products exceeding specifications.

2. FCS Series

⚠WARNING

- Prevent the generated ozone from passing through the filter. Otherwise the filter element may be degraded. Take care especially when using an ozone generator (e.g., ionizer) in combination.
  (1) Do not install in the upstream portion of the filter.
  (2) When installing downstream of the filter, stop air while static electricity is neutralized since generated ozone may flow back.
- Check the filter periodically and replace if necessary.

⚠CAUTION

- Clogging will decrease performance, so inspect and replace components regularly. (The FCS500 Series cannot be replaced.)
- Perform periodical inspections to check for cracks, scratches and other degradation of the transparent resin parts.
  Replace with a new product or SUS type if you find any damage.
- While operating, do not apply vibration, impact, tube flow, or other external force.

3. FAC Series

⚠WARNING

- Do not use this product in an atmosphere containing organic solvents or chemicals, etc., or where the product may come in contact with these substances. The polycarbonate housing may be damaged.
- Do not use this product where electrostatic discharge could occur.
- Do not use this product in an ozone generating environment.
- Securely insert the FAC10 into the push-in fitting before use.

⚠CAUTION

- Clogging will decrease performance, so inspect and replace components regularly.

4. RC2000/2619

⚠CAUTION

- Release the lock before adjusting the pressure.
  Forcibly turning a locked pressure adjustment knob could cause damage.
- Adjust pressure in the direction of the pressure increase.
  The correct pressure cannot be set if pressure is adjusted downward.
- Pressure reduction is not possible without consumption on the secondary side.
- The set pressure changes from the initial set point due to the working environment and conditions, as well as aging of part materials. Check the pressure regularly, and reset if conditions have changed.

Electro pneumatic regulator

■ **Refining and pressure adjusting components/F.R.L. units**

Overview

These components control air pressure/flow rate electrically.

Features

(1) High precision/quick response system
Pressure is continuously controlled based on the application.

(2) Changing pneumatics lines
Pressure setting for regulators in pneumatic lines is enabled by using remote control through computers, etc. Thrust/speed, etc., of the cylinder can be flexibly controlled.

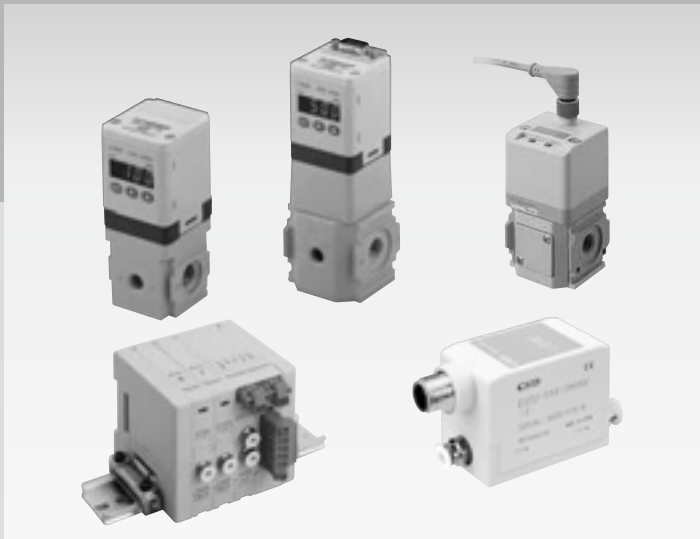

CONTENTS

Product introduction	578
Series variation	580
Applications	582
Digital electro pneumatic regulator	
Product introduction	584
● Solenoid valve medium flow rate (EVD-1000)	586
● Solenoid valve large flow rate (EVD-3000)	590
Electro pneumatic regulator	
● Solenoid valve medium flow rate (EVR)	612
● Compact solenoid valve (EVS2)	622
● Solenoid valve vacuum compatible (EV2100V)	625
● Low pressure electro pneumatic regulator (EVL)	630
Thin electro pneumatic regulator	
Product introduction	636
● Reduced wiring manifold (MEVT)	638
Technical data	649
Manifold specifications	658
⚠ Safety precautions	660

Through proportional control and systematization, it supports FA/FMS.

Realizes highly advanced electronic control.

Proportional control technology

This technology attains an output proportional to the input voltage (current), with linearly proportional input and output. Using this technology expands applications of conventional ON-OFF control pneumatic components to enable continuous analog control.

Advanced applications are possible

Proportional pressure controls enable the pneumatic cylinder's speed, thrust, position, etc., to be freely controlled. Continuous high accuracy variable device control, remote pressure setting of pneumatic lines, and use in FA and FMS are accurately realized.

● Static characteristics diagram of output for proportional control valve input

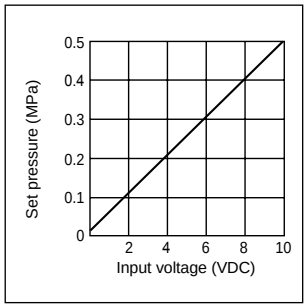

● Block diagram of control concept for machinery and equipment

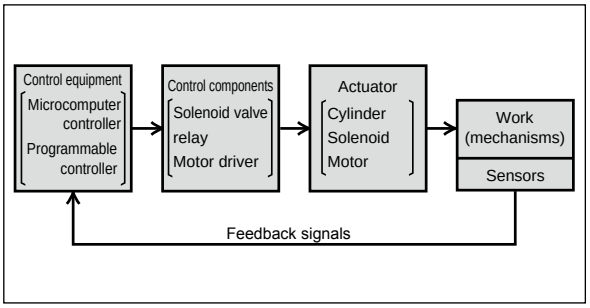

Proportional pressure control system

The proportional pressure control system includes an interface that connects with the host controller (programmable controller, etc.), the regulator and proportional valve that conduct proportional control, and the pressure switch that also functions as the system sensor. These can be used in combination or independently based on the purpose and application.

● Proportional pressure control system

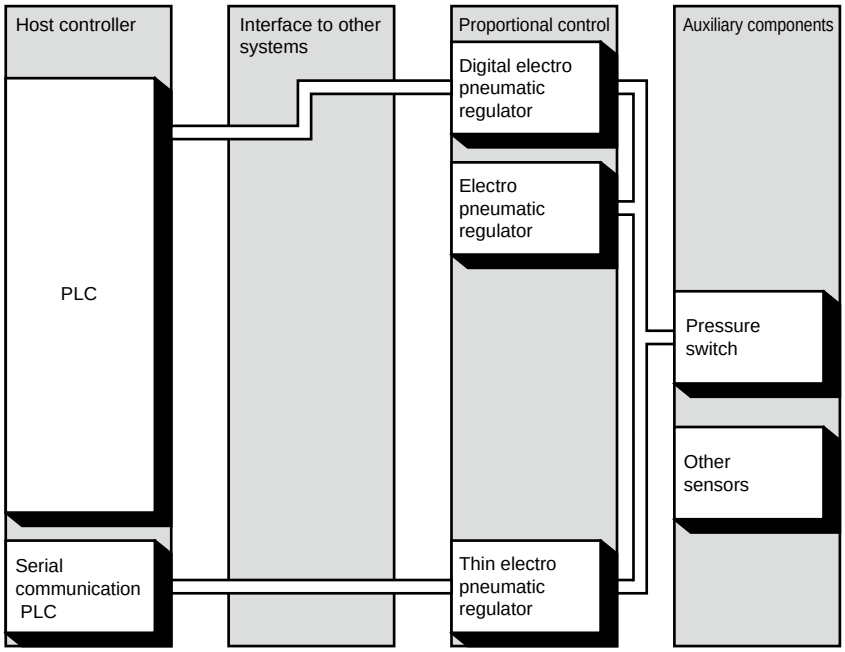

● Pressure proportional applications

- Spot welding gun pressure control
- Grinder pressure control
- Tension control of paper, cloth or film, etc.
- Balancer and lifter pressure control
- Die cushion control for press
- Air brake pressure control
- Robot handling force control
- Fluid and powder flow rate control using pneumatic pressure

● Flow rate proportional control applications

- Cylinder and pneumatic motor speed/rotation speed control
- Cylinder positioning control
- Various applications using air flow rate control (e.g.: Temperature control of film, aluminum foil, etc.)

Needs field

- Continuous
- Flexible
- Soft touch
- Detailed
- Precise
- Fine

⚠ Read the safety precautions before use.

An expansion of products for increased application possibilities

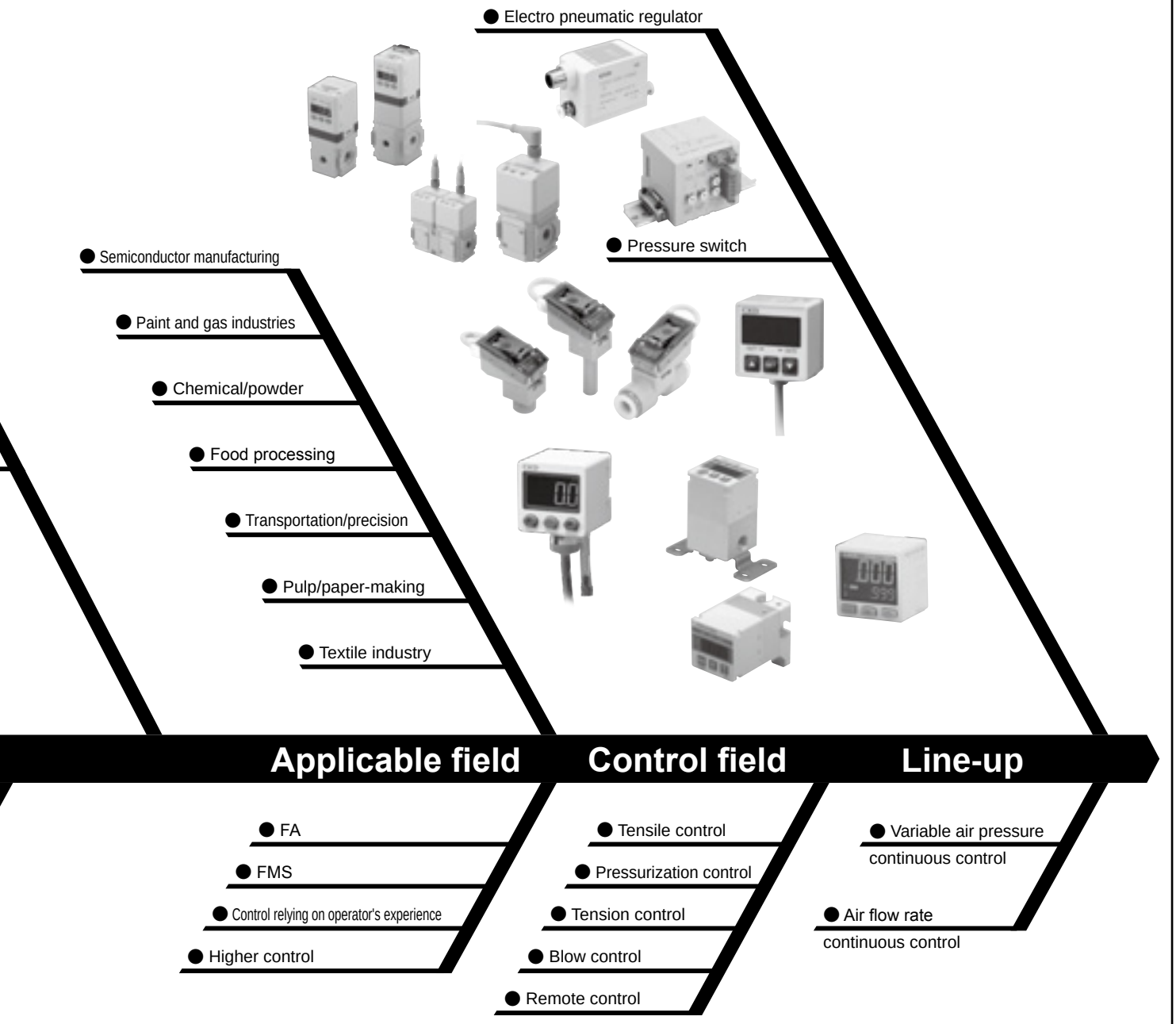

Series variation

Electro pneumatic regulator

Control method	Model		Wiring method: Terminal block	Wiring method: D sub-connector	Wiring method: Serial transmission	Wiring method: FA connector	Port size: M5	Port size: Rc1/4	Port size: Rc3/8	Port size: Push-in ø4	Port size: Push-in ø6	Input signal: 0 to 10 VDC	Input signal: 0 to 5 VDC	Input signal: 4 to 20 mA	Input signal: Parallel 10 bit	Input signal: 0 to 20 mA	Input signal: Variable resistance input
Solenoid valve	EVD-1000 	Functions include pressure and error display and direct memory. The 10-bit parallel model has been added to the input signal.		●				●				●	●	●	●		
	EVD-3000 	Functions include pressure and error display and direct memory. The 10-bit parallel model has been added to the input signal. Larger flow rate than EVD-1000.		●				●	●			●	●	●	●		
	EVR 	Feedback control with semiconductor pressure sensor and electronic control circuit is used. This electro pneumatic regulator allows continuous and precise control of air pressure by electrical signal.				●		●				●	●	●			
	EV2100V 	Feedback control with semiconductor pressure sensor and electronic control circuit is used. This electro pneumatic regulator allows continuous and precise control of vacuum pressure by electric signal.				●		●				●	●	●			●
	EVS2 	Smaller than conventional models. Body takeout cable is used for this pneumatic proportional pilot valve to achieve ultimate convenience and space saving.				●				●	●	●	●	●		●	
	EVL 	Compact electro pneumatic regulator for low pressure that enables flexible and high-precision proportional control from 0 kPa to 50 kPa.				●		●				●	●	●			
	MEVT 	Reduced wiring thin shape. Ultimate space saving thanks to the manifold. Thin electro pneumatic regulator with higher accuracy and responsivity than conventional mechanisms.	●	●	●					●	●	●	●	●			

Electro pneumatic regulator

Series variation

◎: Optimum
○: Usable

	Pressure control range						Step response (No load)			Max. flow rate (ℓ/min (ANR))									Linearity (% F.S.)		Hysteresis (% F.S.)				Applications					Page
	-101.3 to 0 kPa	0 to 50 kPa	0 to 100 kPa	0 to 200 kPa	0 to 500 kPa	0 to 900 kPa	0.1 s or less	0.2 s or less	0.6 s or less	2	6	8	100	120	150	400	800	1500	±0.3 or less	±0.5 or less	0.3 or less	0.4 or less	0.5 or less	1.0 or less	Pilot pressure control	Tension	Push pressure	Blow	Workpiece suction	
			●		●	●		●								●			●				●			◎	◎	◎		586
			●		●	●		●										●	●				●			◎	◎	◎		590
			●	●	●	●		●									●			●	●					◎	◎	◎		612
	●								●					●	●					●				●					◎	625
			●		●		●			●		●								●		●			◎	○	○			622
		●							●				●							●			●					◎		630
			●		●		●			●	●									●		●			◎	○	○			638

Basic system functions

Pneumatic proportional control components attain an output proportional to the input voltage or current. The input voltage and output pressure/flow rate must be linearly proportional. To achieve this, the pressure and flow rate are varied with electric signals, and an electric controller enables variable continuous control. When used as a system, the circuit is configured so signals from the host controller are converted to 0 to 10 VDC signals, etc., by the D/A converter (interface). These signals operate the proportional control valve via the controller, controlling the thrust and speed of each actuator, etc. When needed, highly accurate control is possible through feedback with sensors.

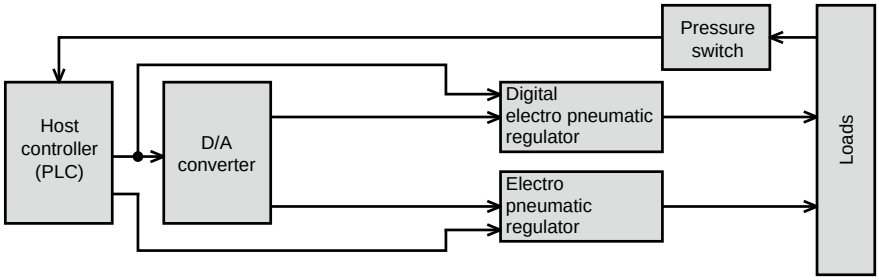

System application examples

● Fluid discharge control

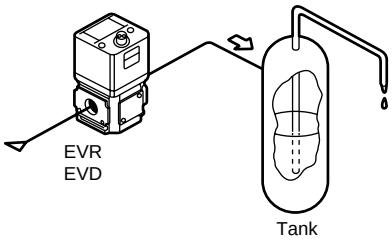

● Chemical liquid drip prevention control

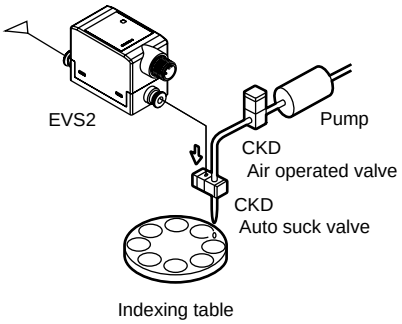

● Micro position control

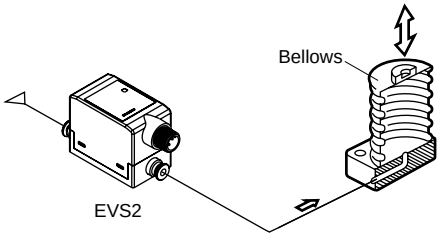

● Fluid pressure control

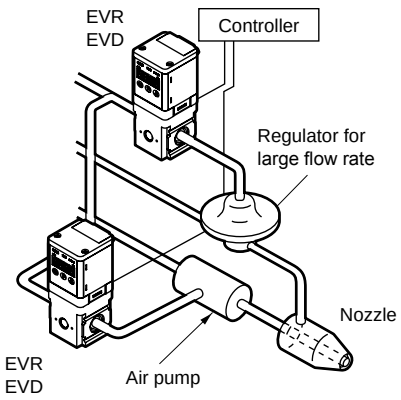

● Balancer tension control

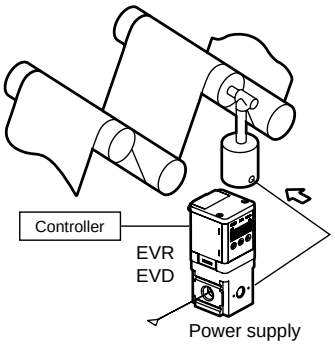

● Grinding force control

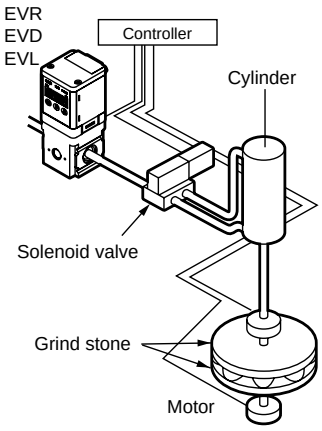

System application examples

● Tension control using air brakes

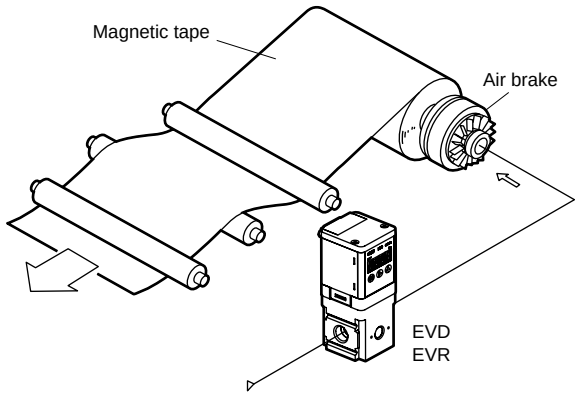

● Air turbine speed control

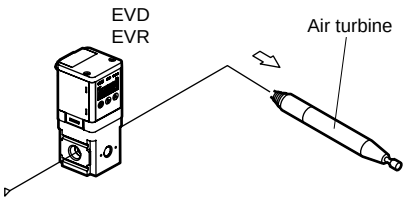

● Applications for fluid pressure feeding

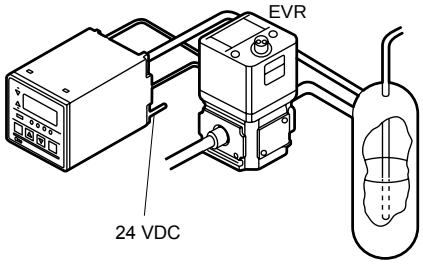

● Fixing lead frames, etc.

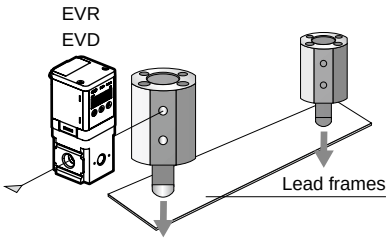

● Chip component assembly

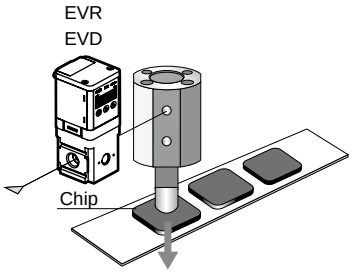

● Leakage inspection

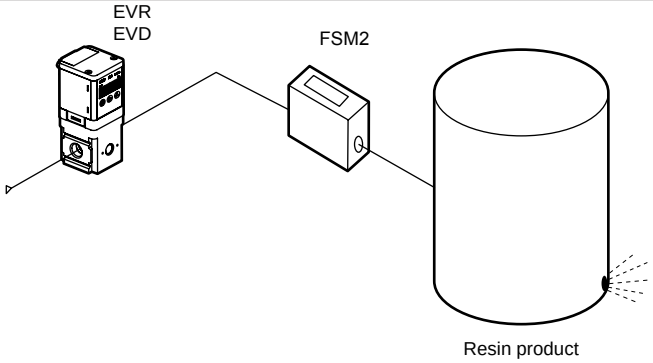

● CMP equipment

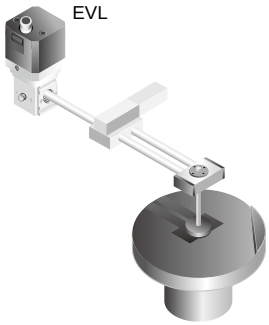

Compact, high function, digital control

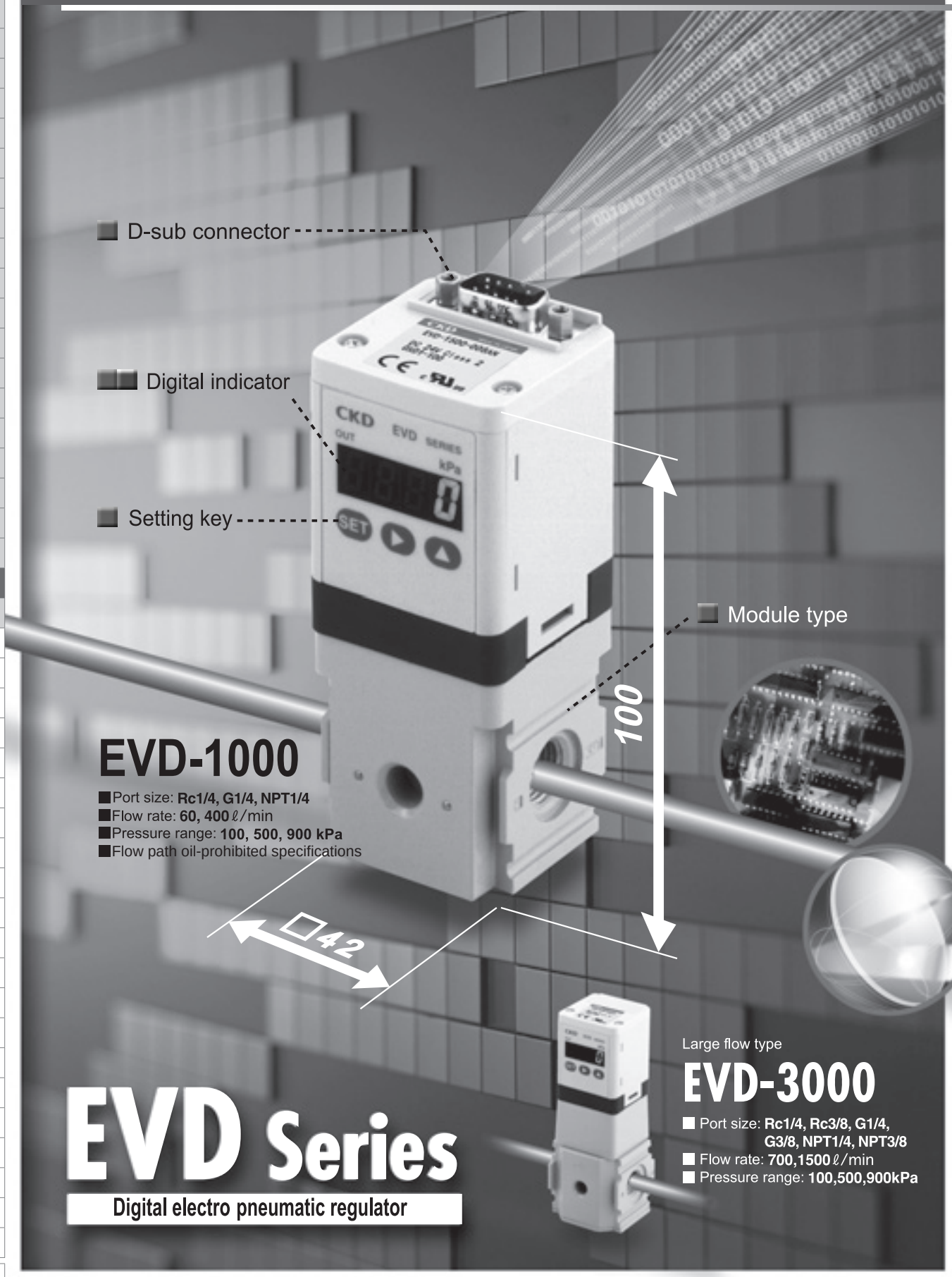

EVD-1000

- Port size: **Rc1/4, G1/4, NPT1/4**
- Flow rate: **60, 400** ℓ/min
- Pressure range: **100, 500, 900 kPa**
- Flow path oil-prohibited specifications

Large flow type

EVD-3000

- Port size: **Rc1/4, Rc3/8, G1/4, G3/8, NPT1/4, NPT3/8**
- Flow rate: **700,1500** ℓ/min
- Pressure range: **100,500,900kPa**

EVD Series

Digital electro pneumatic regulator

EVD Series digital electro pneumatic regulator - realizing various functions and ease-of-use in a compact size with new functions including pressure display, error display and direct memory functions.

User-friendly and easy to install

Digital display shows the control state at a glance

Digital display of output pressure value with three digits. The output state (switch output ON-OFF) is displayed in addition to the error display.

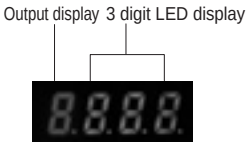

Parallel input type available as standard.

Control directly from PLC.

Compact design, 25% smaller (CKD comparison)

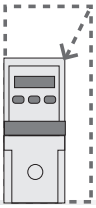

D-sub connector with 2 way connection

The connector can be rotated 90° to the top or to the side providing more flexibility in mounting.

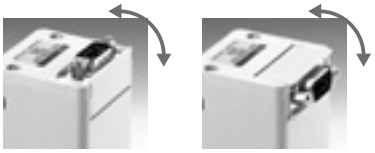

Module type

Filters and regulators such as C1000 Series can be connected.



Realizing multi-functions with microcomputer

Error display function

Errors are displayed and notified with electrical signals.

Zero/span adjustment function

Zero and span can be adjusted according to the usage methods.

Direct memory function

Signals from external sources not required.
Adjust secondary pressure flexibly with keys.

Preset input function

Save up to 8ch of pressure in the main unit and switch with external signals.

Switch output function

Switch output (with built-in overcurrent protection) possible by setting the upper/lower limit pressure.

High accuracy, quick response pressure control

Linearity ±0.3%

Hysteresis 0.5%

Response time 0.2 sec

Proportional value change function (EVD*100 only)

Highly accurate and stable control is possible by adjusting the proportional value upward (one stage) or proportional value downward (ten stages).

Eco-friendly design

Energy saving

The auto power OFF function can automatically turn OFF the digital display.

Material indication

Material names are indicated on the main components to facilitate sorting for recycling.

Digital electro pneumatic regulator variation

Series		Pressure range			Input signal		Port size		Output method		Maximum flow rate		Flow path material	
EVD-1000		100 kPa	500 kPa	900 kPa	Analog	10bit Parallel	Rc1/4 G1/4 NPT1/4		NPN PNP Switch output	Analog output	60 ℓ/min	400 ℓ/min	Grease free	
EVD-3000		100 kPa	500 kPa	900 kPa	Analog	10bit Parallel	Rc1/4 G1/4 NPT1/4	Rc3/8 G3/8 NPT3/8	NPN PNP Switch output	Analog output	700 ℓ/min	1500 ℓ/min	Fluorine grease	Vaseline Custom order

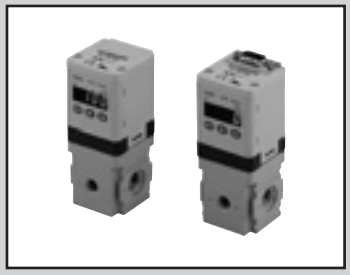

Digital electro pneumatic regulator

EVD-1000 Series

JIS symbol

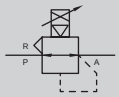

Specifications

Item		EVD-1100-*08□ Analog output (*...0/1/2)	EVD-1100-P08□ Parallel	EVD-1500-*08□ Analog output (*...0/1/2)	EVD-1500-P08□ Parallel	EVD-1900-*08□ Analog output (*...0/1/2)	EVD-1900-P08□ Parallel
Working fluid		Clean compressed air (JIS B 8392-1: 2012 (ISO 8573-1: 2010) [1:3:2] or equivalent)					
Max. working pressure		160 kPa		700 kPa		1000 kPa	
Min. working pressure		Set pressure +50 kPa		Set pressure +100kPa			
Proof pressure	Inlet	240 kPa		1050 kPa		1500 kPa	
	Output side	150 kPa		750 kPa		1350 kPa	
Pressure control range *1		0 to 100 kPa		0 to 500 kPa		0 to 900 kPa	
Power supply voltage		24 VDC ± 10% (stabilized power supply with ripple rate 1% or less)					
Current consumption		0.15 A or less (0.6 A or less rush current when the power is turned ON)					
Input signal (input impedance)		0-10 VDC(6.7kΩ) 0-5 VDC(10kΩ) 4-20 mADC (250Ω)	10bit	0-10 VDC(6.7kΩ) 0−5 VDC(10kΩ) 4-20 mADC (250Ω)	10bit	0-10 VDC(6.7kΩ) 0-5 VDC(10kΩ) 4-20 mADC (250Ω)	10bit
Preset input		8 points	No	8 points	No	8 points	No
Output signal *2		Output accuracy: ±6% F.S. or less, analog output: 1 to 5 VDC (connecting load impedance 500 kΩ and over)					
		Switch output: NPN or PNP open collector output, 30 V or less and 50 mA or less, voltage drop 2.4 V or less, PLC/relay compatible					
Error output signal		NPN or PNP open collector output, 30 V or less and 50 mA or less, voltage drop 2.4 V or less, PLC/relay compatible					
Direct memory setting		1 to 100 kPa (Min. setting width 1 kPa/setting resolution 1 kPa)		5 to 500 kPa (Min. setting width 1 kPa/setting resolution 1 kPa)		9 to 900 kPa (Min. setting width 1 kPa/setting resolution 2 kPa)	
Pressure display	Display method	7-segment LED 3 digits, indicator accuracy: ±2% F.S. or less					
	Display range	0 to 100 kPa		0 to 500 kPa		0 to 900 kPa	
	Display resolution	1 kPa		1 kPa		1 kPa	
Hysteresis *3		0.5% F.S. or less					
Linearity *3		±0.3% F.S. or less					
Resolution *3		0.2% F.S. or less					
Repeatability *3		0.3% F.S. or less					
Temperature characteristics	Zero point fluctuation	±0.15% F.S./°C or less					
	Span fluctuation	±0.07% F.S./°C or less					
Max. flow rate (ANR) *4		60 ℓ/min		400 ℓ/min			
Step response *5	No load	0.2 sec. or less					
Vibration resistance		98m/s^{2}or less					
Ambient temperature		5 to 50°C					
Fluid temperature		5 to 50°C					
Port size		Port size option 08...Rc1/4, 08G...G1/4, 08N...NPT1/4					
Mounting orientation		Free					
Weight		250 g					
Protection circuit		Power reverse connection protection, switch output reverse connection protection, switch output load short-circuit protection					

*1: There is 1% F.S. or less residual pressure when the input signal is 0%. (EVD-1100: 1 kPa, EVD-1500: 5 kPa, EVD-1900: 9 kPa)
*2: Select the analog output or switch output.
*3: The condition of the values above is: 24 ± 0.1 VDC power supply voltage, 25 ± 3°C ambient temperature, no load, working pressure of +50 kPa max. control pressure (EVD-1100)/+100 kPa (EVD-1500, 1900), and 10 to 90% control pressure.
In addition, when the secondary side is a closed circuit, pressure fluctuations will occur if the product is used for blowing or for similar applications.
*4: The characteristics where working pressure is maximum and control pressure is maximum are shown.
*5: The value above is obtained at the max. working pressure and when the step amount changes from
50% F.S. → 100% F.S.
50% F.S. → 60% F.S.
50% F.S. → 40% F.S.

Specifications for components for rechargeable battery production (Catalog No. CC-1226A)

EVD1500/1900—[Input specifications/port size/output specifications]—[Option]—**3**—**P4□**

EVD3500/3900—[Input specifications/port size/output specifications]—[Option]—**3**—**P4□**

Contact your nearest CKD sales office or dealer for details.

How to order

EVD-1 500 - 0 08 AN - C1B1 - 3

- A Pressure control range
- B Input signal
- C Port size
- D Output signal
- E Option
- F Power supply voltage

Code	Description
A Pressure control range *1	
100	0 - 100 kPa
500	0 - 500 kPa
900	0 - 900 kPa
B Input signal	
0	0 - 10 VDC
1	0 - 5 VDC
2	4 to 20 mADC
P	Parallel 10 bit
C Port size	
08	Rc1/4
08G	G1/4
08 N	NPT1/4
D Output signal	
AN	1 to 5 V analog, error (NPN)
AP	1 to 5 V analog, error (PNP)
SN	Switch (NPN), error (NPN)
SP	Switch (PNP), error (PNP)
E Option	
Cable option	
Blank	No
C1	Analog 9-conductor, 1 m cable
C3	Analog 9-conductor, 3m cable
P1	Parallel 15-conductor, cable 1 m
P3	Parallel 15-conductor, 3m cable
Bracket is an included option	
Blank	No
B1	B-bracket, floor mounted
L1	L-bracket, wall mounted
F Power supply voltage	
3	24 VDC

*1: There is 1% F.S. or less residual pressure when the input signal is 0%.

● Discrete option (cable, bracket) model No.

EVD- C1

E Option

Internal structure and parts list

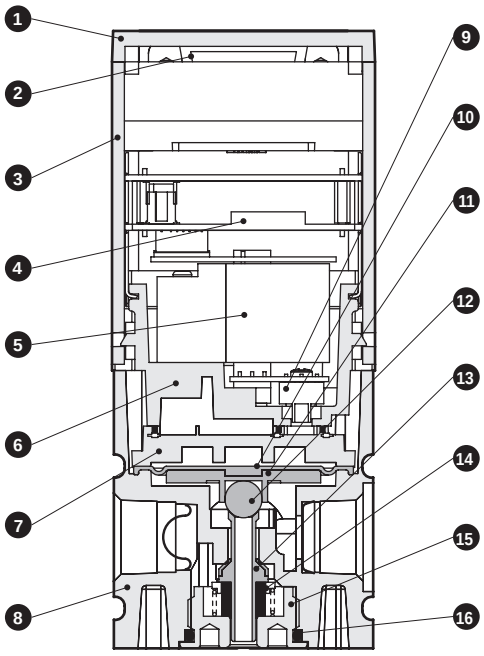

Part No.	Part name	Material
1	Lid	PBT resin
2	D-sub-connector	-
3	Housing	ABS resin
4	Controller board	-
5	3-way valve	-
6	Valve base	Polyphenylene sulfide resin
7	Pilot chamber	Polyphenylene sulfide resin
8	Body	Aluminum alloy die-casting
9	Pressure sensor	-
10	Diaphragm	Special nitrile rubber
11	Relief seat	Aluminum alloy
12	Steel ball (exhaust valve)	Stainless steel
13	Valve	Special nitrile rubber, stainless steel
14	Bottom rubber	Silicone rubber
15	Bottom plug	Brass, electroless nickeling
16	O-ring	Fluoro rubber

Cannot be disassembled

Dimensions

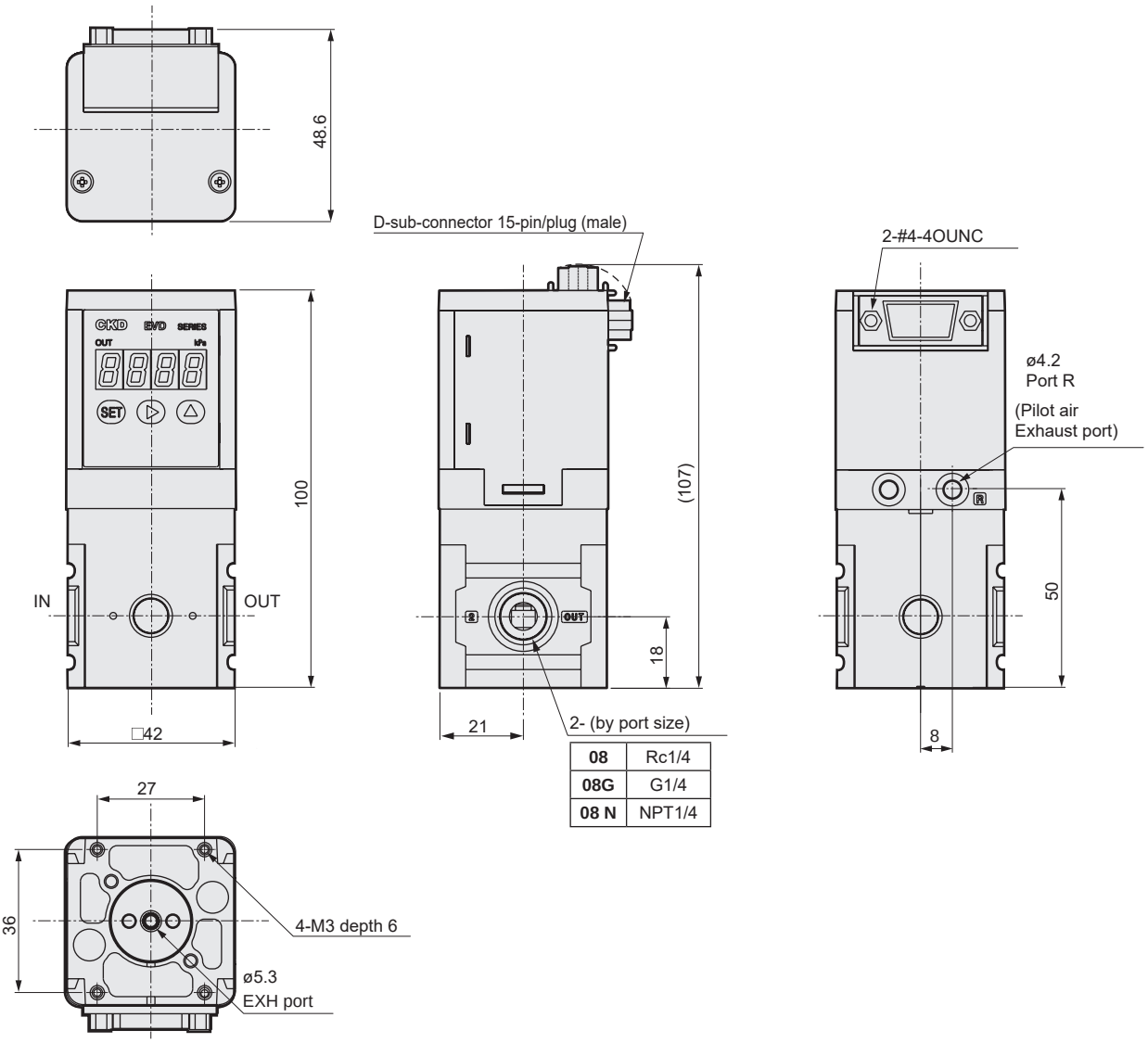

08	Rc1/4
08G	G1/4
08 N	NPT1/4

Optional dimensions

● B-bracket (-B1): floor mounted

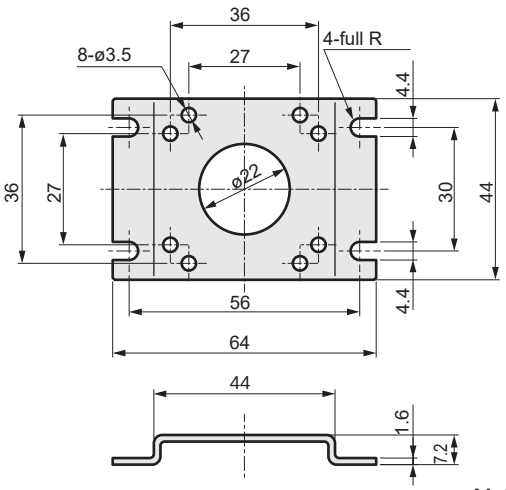

Material: SPCC
Ni plated
Weight: 32 g

● L-bracket (-L1): Wall mounted

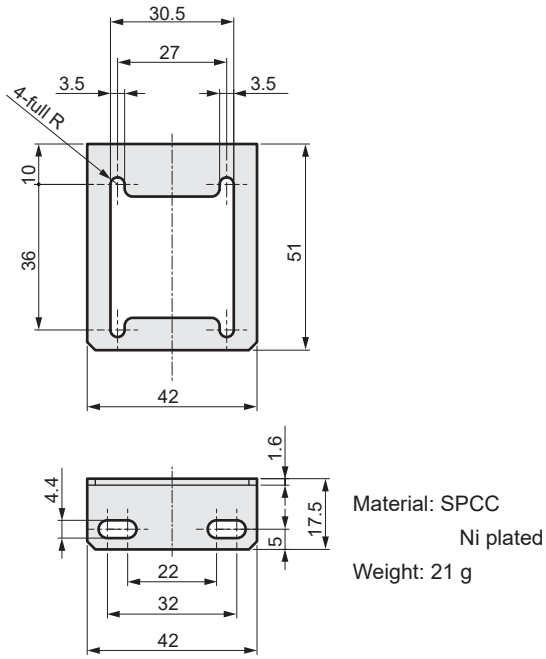

Material: SPCC
Ni plated
Weight: 21 g

* Refer to page 595 for details of cable option dimensions.

I/O characteristics

● EVD-1100

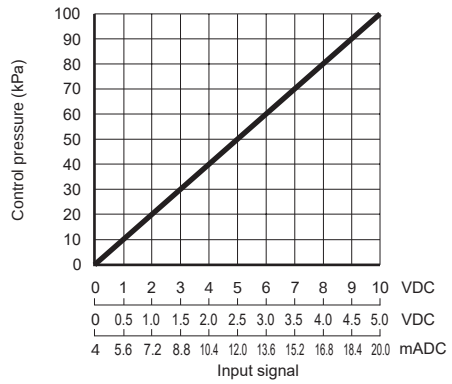

● EVD-1500

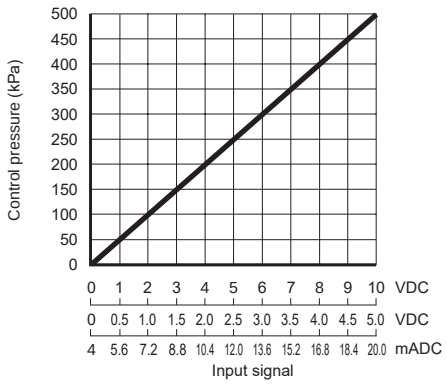

● EVD-1900

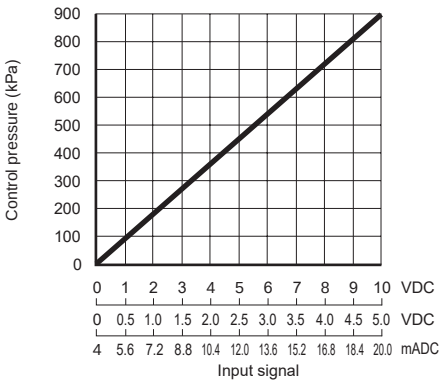

Analog output (analog output only: model No. AN/AP)

● EVD-1100

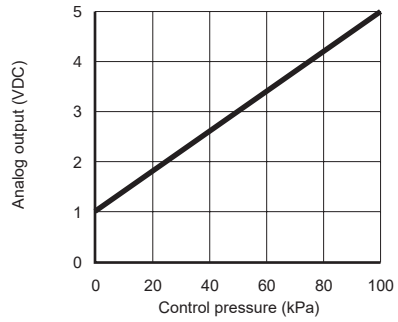

● EVD-1500

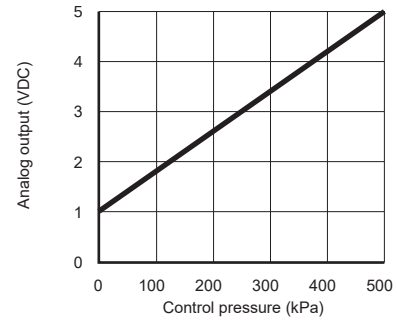

● EVD-1900

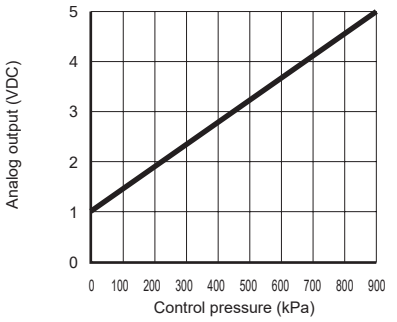

Flow characteristics

● EVD-1100

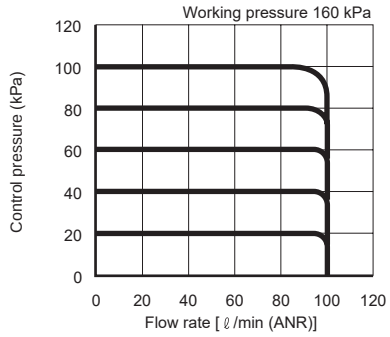

● EVD-1500

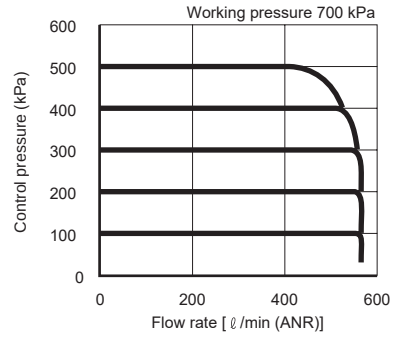

● EVD-1900

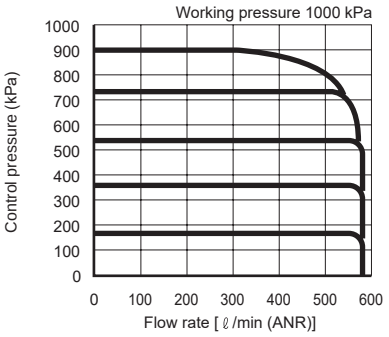

Relief characteristics

● EVD-1100

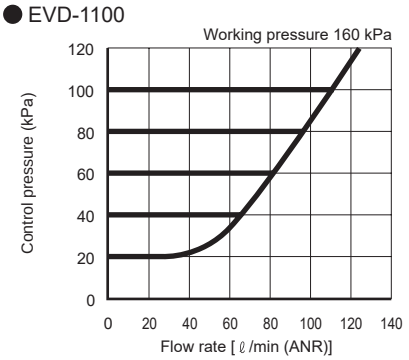

● EVD-1500

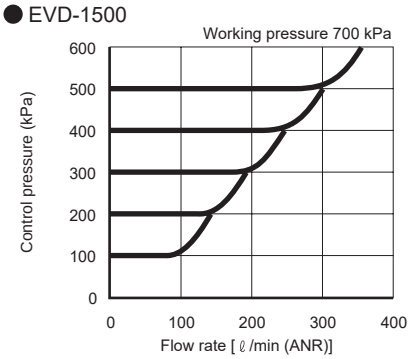

● EVD-1900

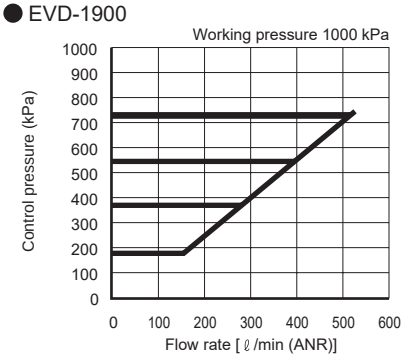



Digital electro pneumatic regulator

EVD-3000 Series

JIS symbol

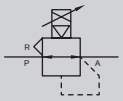

Specifications

Item		EVD-3100-*08□ EVD-3100-*10□ Analog output (*...0/1/2)	EVD-3100-P08□ EVD-3100-P10□ Parallel	EVD-3500-*08□ EVD-3500-*10□ Analog output (*...0/1/2)	EVD-3500-P08□ EVD-3500-P10□ Parallel	EVD-3900-*08□ EVD-3900-*10□ Analog output (*...0/1/2)	EVD-3900-P08□ EVD-3900-P10□ Parallel
Working fluid		Clean compressed air (JIS B 8392-1: 2012 (ISO 8573-1: 2010) [1:3:2] or equivalent)					
Max. working pressure		160 kPa		700 kPa		1000 kPa	
Min. working pressure		Set pressure +50 kPa		Set pressure +100kPa			
Proof pressure	Inlet	240 kPa		1050 kPa		1500 kPa	
	Output side	150 kPa		750 kPa		1350 kPa	
Pressure control range *1		0 to 100 kPa		0 to 500 kPa		0 to 900 kPa	
Power supply voltage		24 VDC ± 10% (stabilized power supply with ripple rate 1% or less)					
Current consumption		0.15 A or less (0.6 A or less rush current when the power is turned ON)					
Input signal (input impedance)		0–10 VDC (6.7 kΩ) 0–5 VDC (10 kΩ) 4-20 mADC (250 Ω)	10bit	0–10 VDC (6.7 kΩ) 0–5 VDC (10 kΩ) 4-20 mADC (250 Ω)	10bit	0–10 VDC (6.7 kΩ) 0–5 VDC (10 kΩ) 4-20 mADC (250 Ω)	10bit
Preset input		8 points	No	8 points	No	8 points	No
Output signal *2		Output accuracy: ±6% F.S. or less, analog output: 1 to 5 VDC (connecting load impedance 500 kΩ and over)					
		Switch output: NPN or PNP open collector output, 30 V or less and 50 mA or less, voltage drop 2.4 V or less, PLC/relay compatible					
Error output signal		NPN or PNP open collector output, 30 V or less and 50 mA or less, voltage drop 2.4 V or less, PLC/relay compatible					
Direct memory setting		1 to 100 kPa (Min. setting width 1 kPa/setting resolution 1 kPa)		5 to 500 kPa (Min. setting width 1 kPa/setting resolution 1 kPa)		9 to 900 kPa (Min. setting width 1kPa/setting resolution 2kPa)	
Pressure display	Display method	7-segment LED 3 digits, indicator accuracy: ±2% F.S. or less					
	Display range	0 to 100 kPa		0 to 500 kPa		0 to 900 kPa	
	Display resolution	1 kPa		1 kPa		1 kPa	
Hysteresis *3		0.5% F.S. or less					
Linearity *3		±0.3% F.S. or less					
Resolution *3		0.2% F.S. or less					
Repeatability *3		0.3% F.S. or less					
Temperature characteristics	Zero point fluctuation	±0.15% F.S./°C or less					
	Span fluctuation	±0.07% F.S./°C or less					
Max. flow rate (ANR) *4		700 ℓ/min		1500 ℓ/min			
Step response *5	No load	0.2 sec. or less					
Vibration resistance		98m/s^{2}or less					
Ambient temperature		5 to 50°C					
Fluid temperature		5 to 50°C					
Port size	IN, OUT port	Port size option 08...Rc1/4, 10...Rc3/8, 08G...G1/4, 10G...G3/8, 08N...NPT1/4, 10N...NPT3/8					
	EXH port	Rc3/8, G3/8, NPT3/8					
Mounting orientation		Free					
Weight		450 g					
Protection circuit		Power reverse connection protection, switch output reverse connection protection, switch output load short-circuit protection					

*1: There is 1% F.S. or less residual pressure when the input signal is 0%. (EVD-3100: 1 kPa, EVD-3500: 5 kPa, EVD-3900: 9 kPa)
*2: Select the analog output or switch output.
*3: The condition of the values above is: 24 ± 0.1 VDC power supply voltage, 25 ± 3°C ambient temperature, no load, working pressure of +50 kPa max. control pressure (EVD-3100)/+100 kPa (EVD-3500, 3900), and 10 to 90% control pressure. In addition, when the secondary side is a closed circuit, pressure fluctuations will occur if the product is used for blowing or for similar applications.
*4: The characteristics where working pressure is maximum and control pressure is maximum are shown.
*5: The value above is obtained at the max. working pressure and when the step amount changes from { 50% F.S. → 100% F.S. / 50% F.S. → 60% F.S. / 50% F.S. → 40% F.S.

How to order

EVD-3 **500** - **0** **08** **AN** - **C1B3** - **3**

- **500** — Ⓐ Pressure control range
- **0** — Ⓑ Input signal
- **08** — Ⓒ Port size (IN, OUT)
- **AN** — Ⓓ Output signal
- **C1B3** — Ⓔ Option
- **3** — Ⓕ Power supply voltage

Code	Description
Ⓐ Pressure control range *1	
100	0 - 100 kPa
500	0 - 500 kPa
900	0 - 900 kPa
Ⓑ Input signal	
0	0 - 10 VDC
1	0 - 5 VDC
2	4 to 20 mADC
P	Parallel 10 bit
Ⓒ Port size (IN, OUT)	
08	Rc1/4
10	Rc3/8
08G	G1/4
10G	G3/8
08 N	NPT1/4
10 N	NPT3/8
Ⓓ Output signal	
AN	1 to 5 V analog, error (NPN)
AP	1 to 5 V analog, error (PNP)
SN	Switch (NPN), error (NPN)
SP	Switch (PNP), error (PNP)
Ⓔ Option	
Cable option	
Blank	No
C1	Analog 9-conductor, 1 m cable
C3	Analog 9-conductor, 3m cable
P1	Parallel 15-conductor, cable 1 m
P3	Parallel 15-conductor, 3m cable
Bracket is an included option	
Blank	No
B3	B-bracket, floor mounted
L3	L-bracket, wall mounted
Ⓕ Power supply voltage	
3	24 VDC

*1: There is 1% F.S. or less residual pressure when the input signal is 0%.

● Discrete option (cable, bracket) model No.

EVD- **C1**

- **C1** — Ⓔ Option

Internal structure and parts list

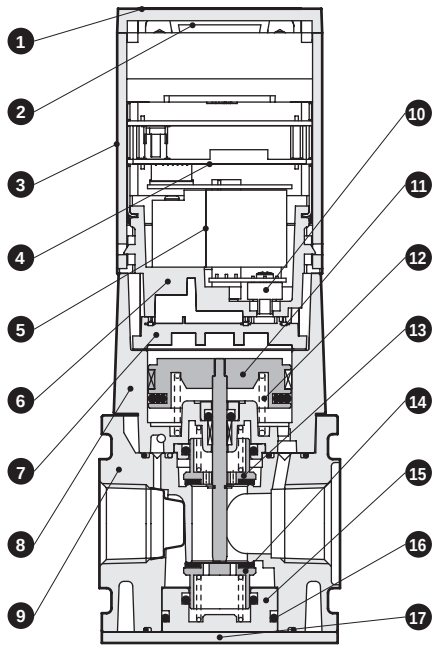

Part No.	Part name	Material
1	Lid	PBT resin
2	D-sub-connector	-
3	Housing	ABS resin
4	Controller board	-
5	3-way valve	-
6	Valve base	Polyphenylene sulfide resin
7	Pilot chamber	Polyphenylene sulfide resin
8	Piston body assembly	Aluminum alloy die-casting, etc.
9	Body	Aluminum alloy die-casting
10	Pressure sensor	-
11	Piston assembly	Aluminum alloy, stainless steel, etc.
12	Spring	Stainless steel
13	Top valve	Brass, special nitrile rubber
14	Bottom valve	Brass, special nitrile rubber
15	Bottom cap	Brass
16	O-ring	Nitrile rubber
17	Base plate	Steel plate

Cannot be disassembled

Dimensions

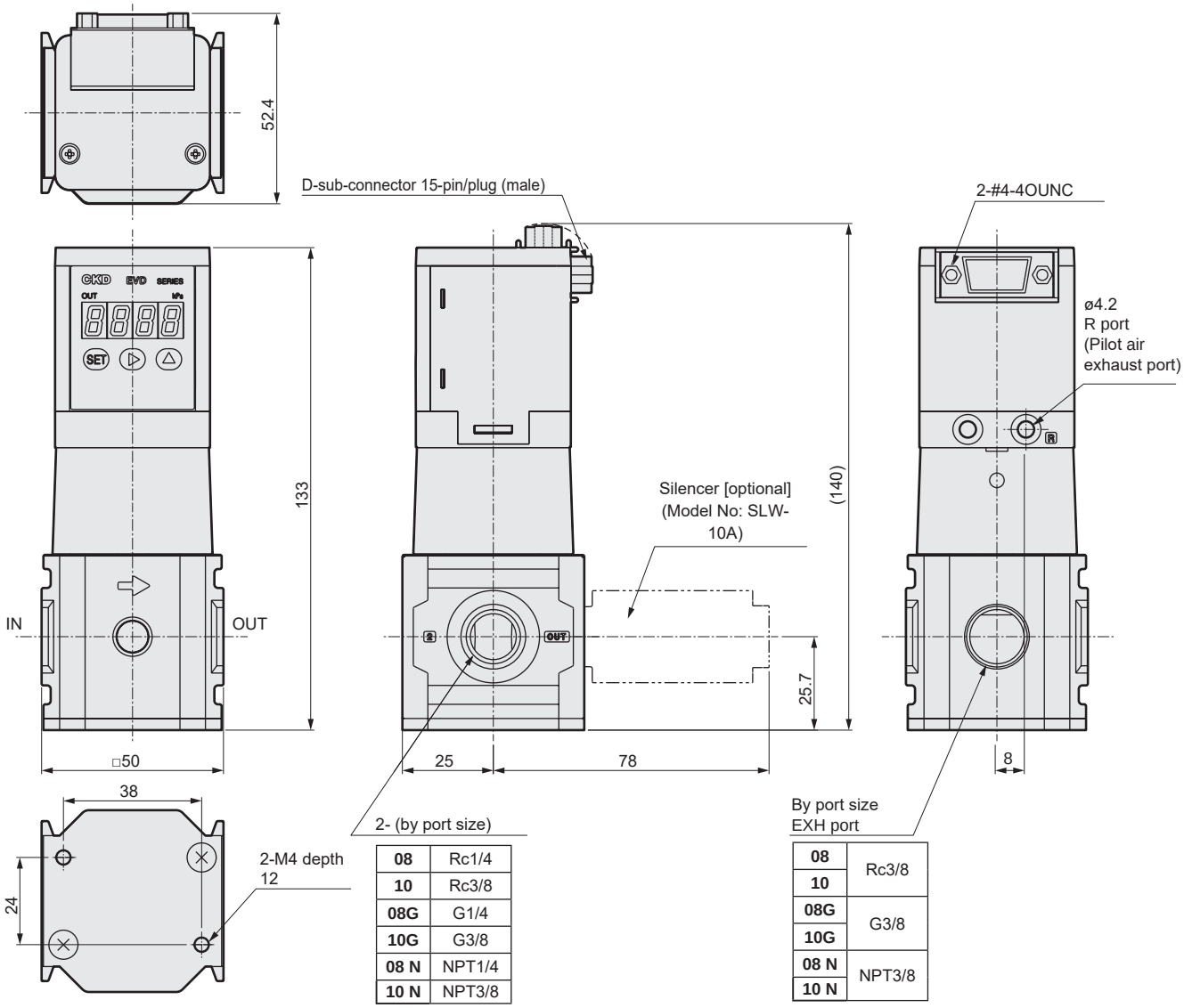

08	Rc1/4
10	Rc3/8
08G	G1/4
10G	G3/8
08 N	NPT1/4
10 N	NPT3/8

08	Rc3/8
10	
08G	G3/8
10G	
08 N	NPT3/8
10 N	

Optional dimensions

● B-bracket (-B3): Floor mounted

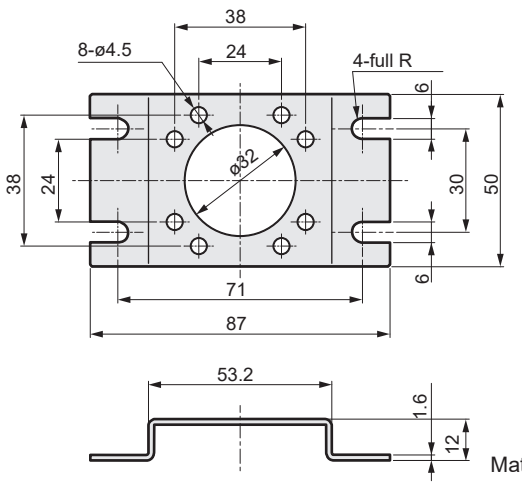

Material: SPCC
Ni plated
Weight: 48 g

● L-bracket (-L3): Wall mounted

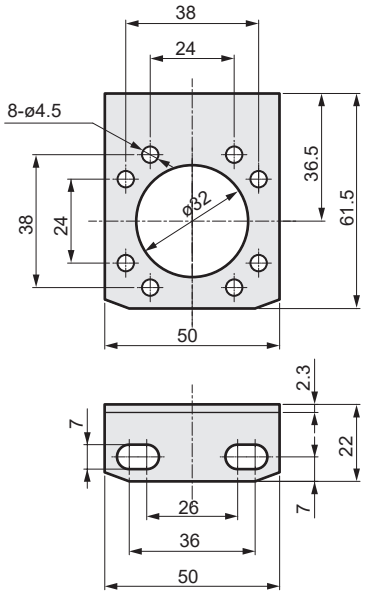

Material: SPCC
Ni plated
Weight: 51 g

* Refer to page 595 for details of cable option dimensions.

I/O characteristics

● EVD-3100

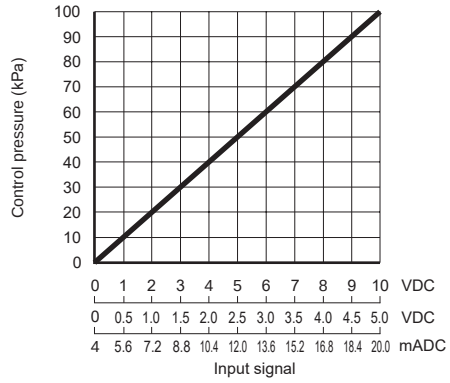

● EVD-3500

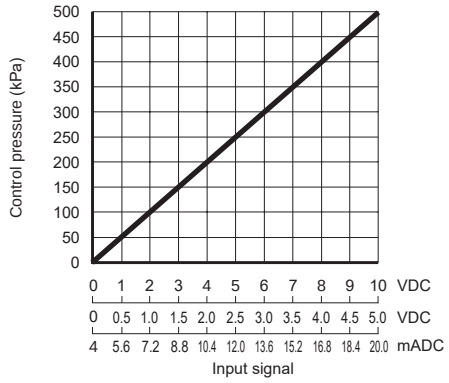

● EVD-3900

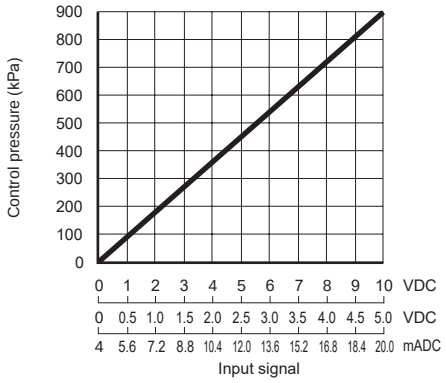

Analog output (analog output only: model No. AN/AP)

● EVD-3100

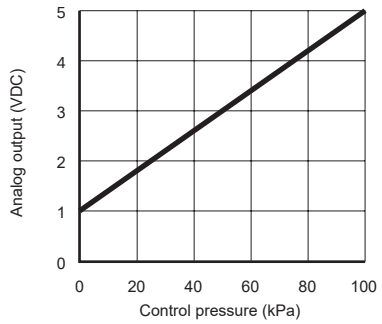

● EVD-3500

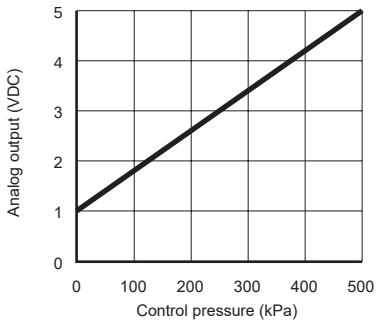

● EVD-3900

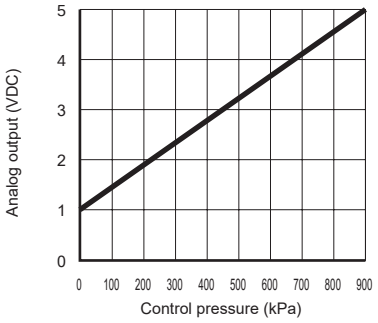

Flow characteristics

● EVD-3100-□08

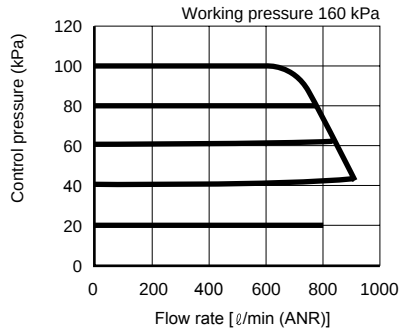

● EVD-3100-□10

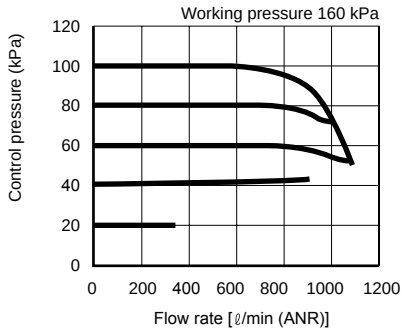

● EVD-3500-□08

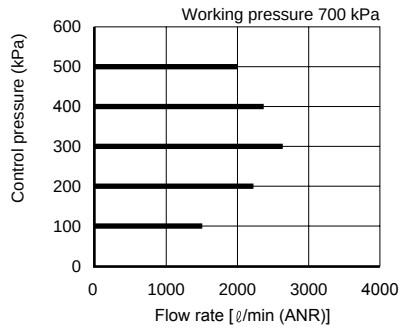

● EVD-3500-□10

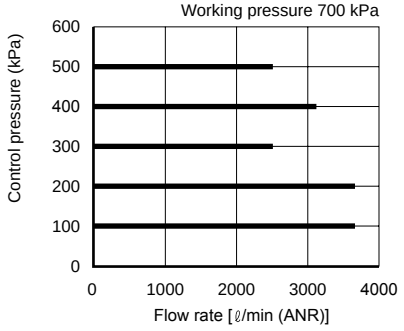

● EVD-3900-□08

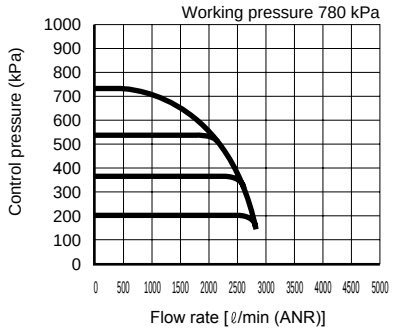

● EVD-3900-□10

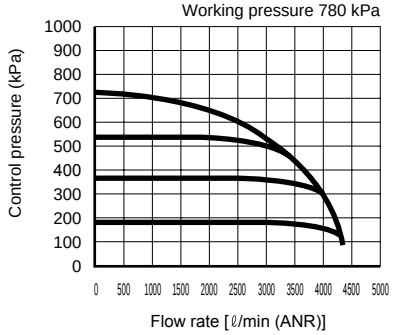

Relief characteristics

● EVD-3100

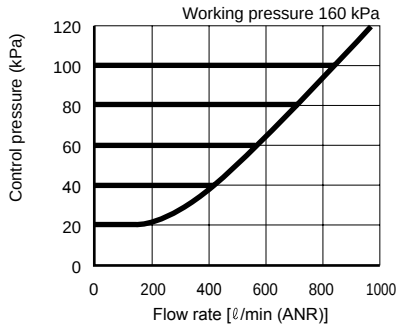

● EVD-3500

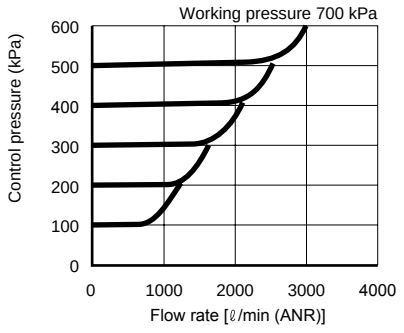

● EVD-3900

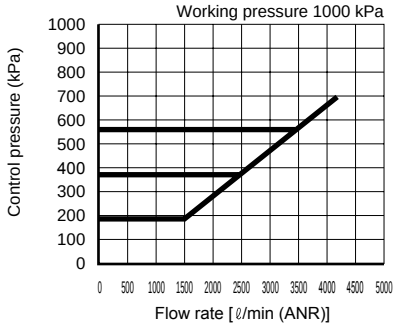

Cable optional dimensions

● EVD-C1,EVD-C3

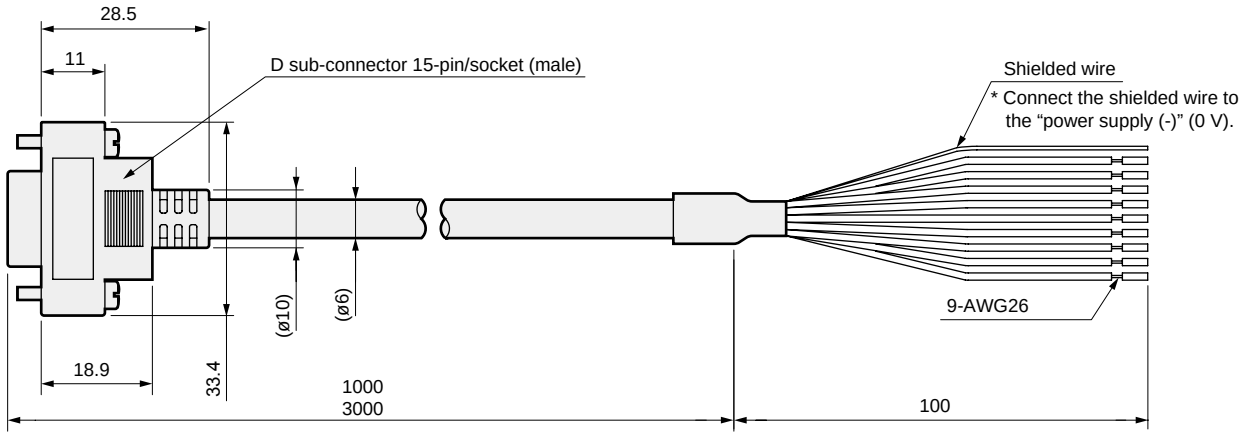

Wire material	Tinned annealed copper wire
Conductor O.D.	Approx. 0.48
Outer diameter of insulator	0.88

D sub-socket pin No.	1	2	3	4	5	6	7	8	9	10	11			12	13		14	15	Weight g
Insulator color	Brown	Orange	Yellow	-	Red	-	-	-	-	Gray	White			-	Green		Blue	Black	C1:67 C3:166
Name	Preset input signal			Vacant	Power supply +	Vacant	Vacant	Vacant	Vacant	Common	Input signal			Vacant	Analog output	Switch output	Error output	Power supply - (0V)	
Input	Bit 1	Bit 2	Bit 3		+24 VDC						0 to 10 VDC	0 to 5 VDC	4 to 20 mADC	Vacant	Output 1 to 5 VDC	NPN or PNP output	NPN or PNP output		

Note: The No. 10 pin common is the common for the preset input (pin No. 1 to 3).

● EVD-P1,EVD-P3

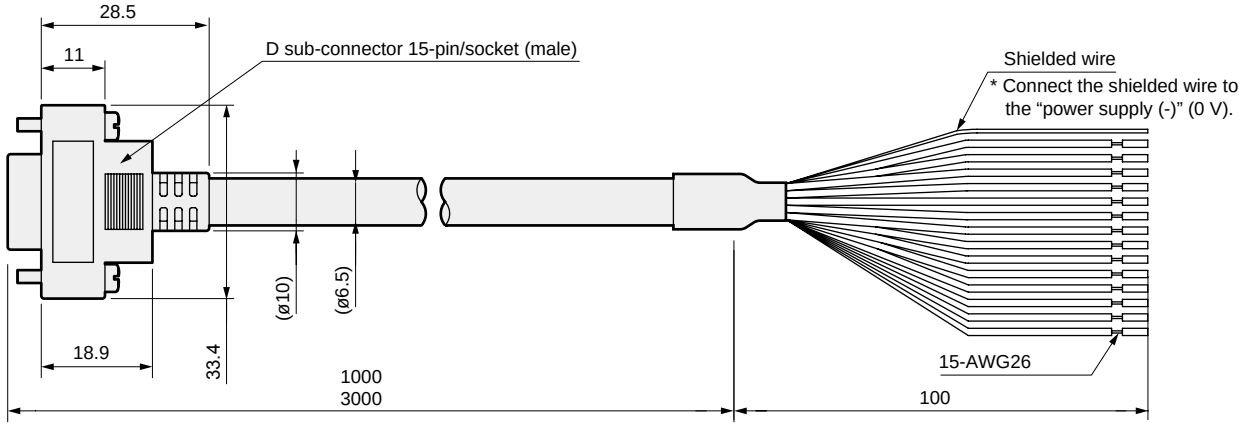

Wire material	Tinned annealed copper wire
Conductor O.D.	Approx. 0.48
Outer diameter of insulator	0.88

D sub-socket pin No.	1	2	3	4	5	6	7	8	9	10	11	12	13		14	15	Weight g
Insulator color	Brown	Orange	Yellow	Purple	Red	Light blue	Pink	White (with black line)	Red (with black line)	Gray	White	Green (with black line)	Green		Blue	Black	P1:82 P3:205
Name	Parallel input signal				Power supply +	Parallel input signal				Common	Parallel input signal		Analog output	Switch output	Error output	Power supply - (0 V)	
Input	Bit 1	Bit 2	Bit 3	Bit 4	+24 VDC	Bit 5	Bit 6	Bit 7	Bit 8		Bit 9	Bit 10	Output 1 to 5 VDC	NPN or PNP output	NPN or PNP output		

Note: The No. 10 pin common is the common for the parallel input signal (pin No. 1 to 4, 6 to 9, 11, 12).

Wiring method

Example of internal circuit and load connection Analog input

EVD-1□-0□AN-□-□, EVD-1□-1□AN-□, EVD-1□-2□AN-□
EVD-3□-0□AN-□-□, EVD-3□-1□AN-□, EVD-3□-2□AN-□
(Analog input, analog output + error output NPN output)

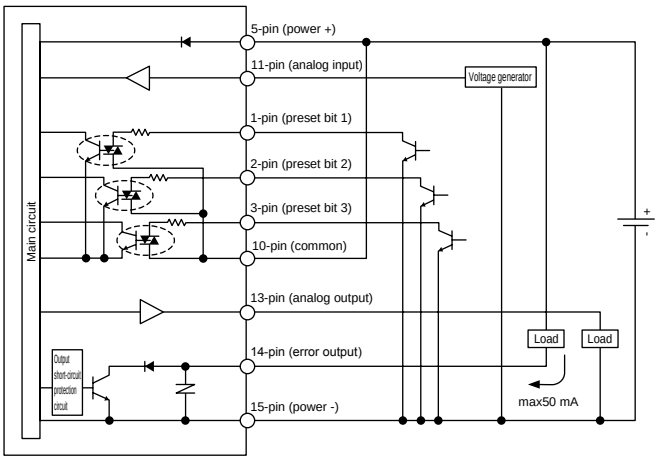

EVD-1□-0□AP-□-□,EVD-1□-1□AP-□,EVD-1□-2□AP-□
EVD-3□-0□AP-□-□,EVD-3□-1□AP-□,EVD-3□-2□AP-□
(Analog input, analog output + error output PNP output)

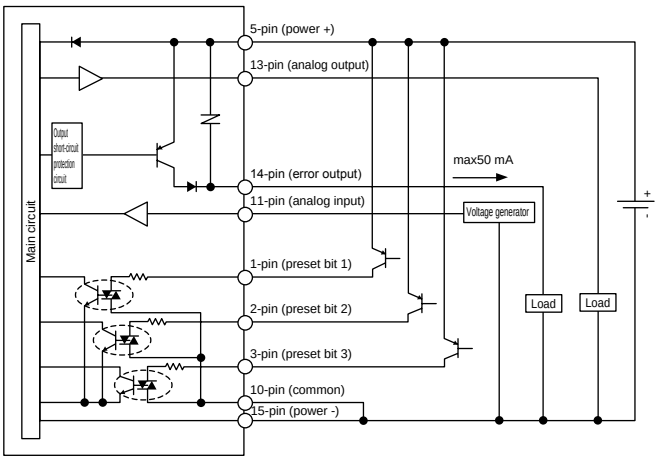

EVD-1□-0□SN-□-□, EVD-1□-1□SN-□, EVD-1□-2□SN-□
EVD-3□-0□SN-□-□, EVD-3□-1□SN-□, EVD-3□-2□SN-□
(Analog input, switch output + error output NPN output)

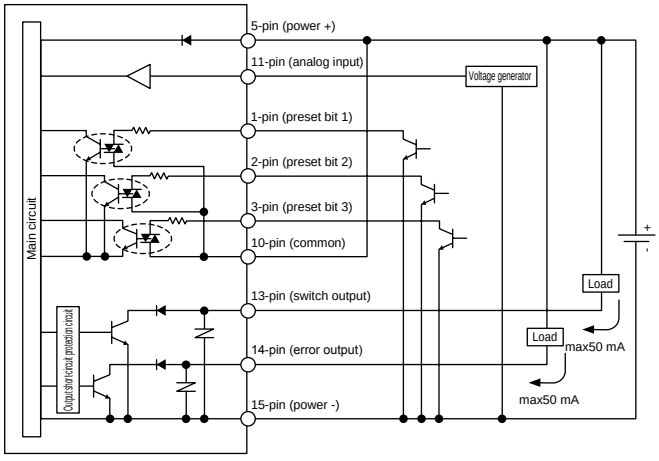

EVD-1□-0□SP-□-□, EVD-1□-1□SP-□, EVD-1□-2□SP-□
EVD-3□-0□SP-□-□, EVD-3□-1□SP-□, EVD-3□-2□SP-□
(Analog input, switch output + error output PNP output)

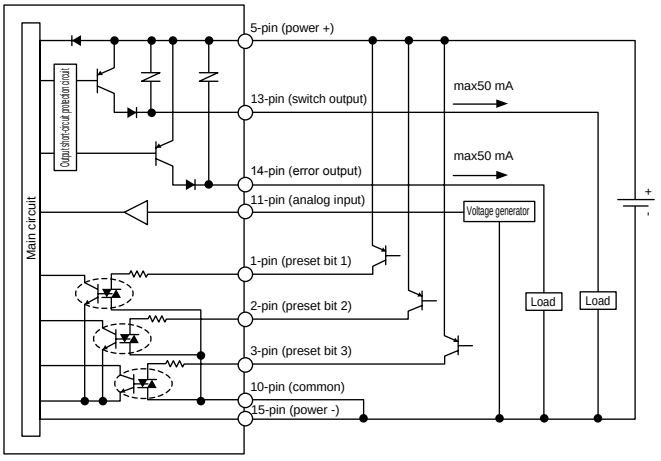

■ Connector pin layout (product body side)
[Analog input type]

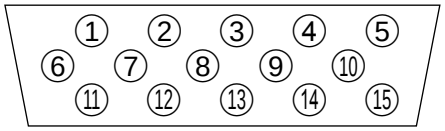

The analog input type
④ does not have the ⑥, ⑦, ⑧, ⑨, ⑫ or pins.

Example of internal circuit and load connection Parallel input

EVD-1□-P□AN-□-□
EVD-3□-P□AN-□-□
(Parallel input, analog output + error output NPN output)

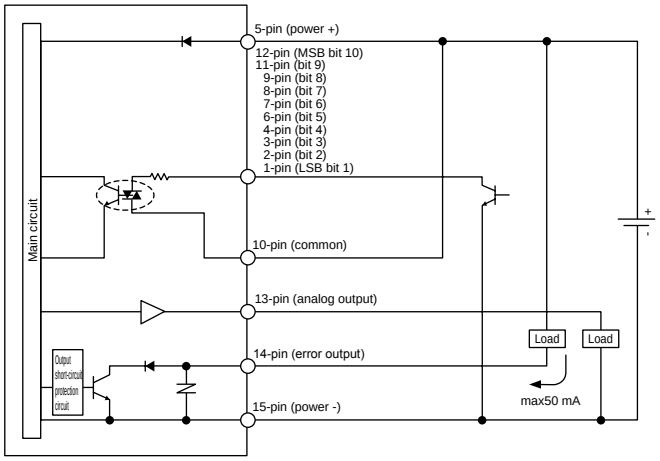

EVD-1□-P□AP-□-□
EVD-3□-P□AP-□-□
(Parallel input, analog output + error output PNP output)

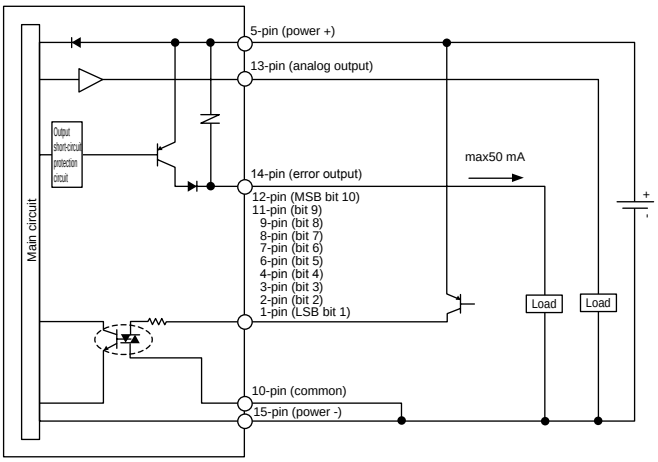

EVD-1□-P□SN-□-□
EVD-3□-P□SN-□-□
(Parallel input, switch output + error output NPN output)

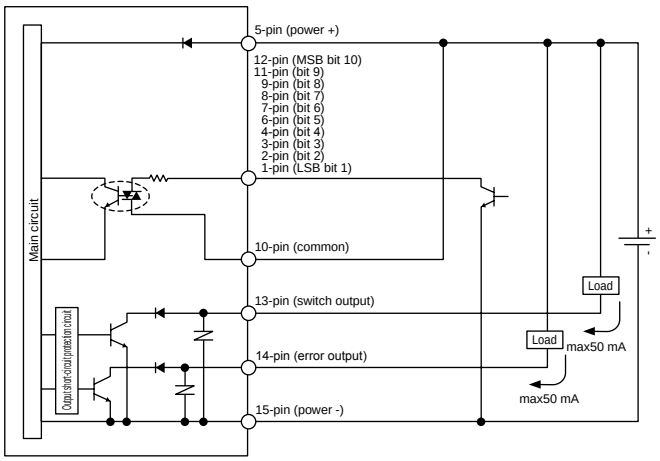

EVD-1□-P□SP-□-□
EVD-3□-P□SP-□-□
(Parallel input, switch output + error output PNP output)

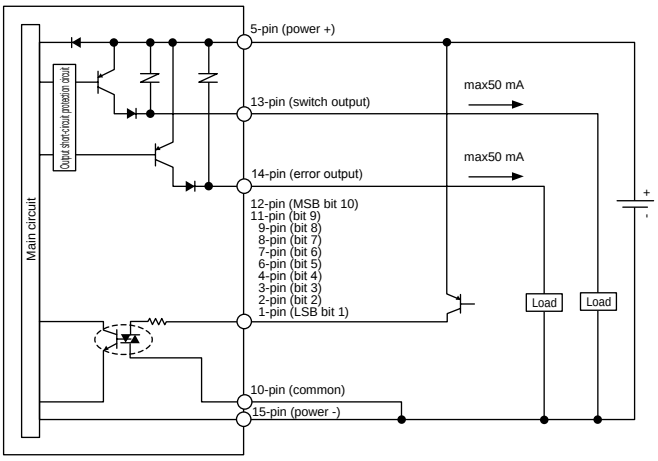

■ Connector pin layout (product body side)
[Parallel input type]

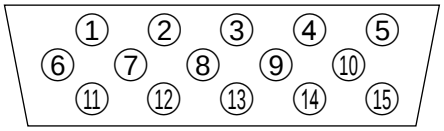

Input method

■ Relation of parallel input signal and control pressure

The parallel input signal has 10 bits, and when converted into a decimal is 0-1023.
Input signal = EVD setting pressure (kPa)/maximum control pressure x 1023 The maximum control pressure is 100 kPa for EVD-1100
500 kPa for EVD-1500
900 kPa for EVD-1900.

Example: When setting 300 kPa with EVD-1500
300(kPa)/500(kPa) × 1023=613.8 → 614

(When back calculating with a setting of 614, it will be
500(kPa) × 614/1023≈300(kPa))

When 614 (decimal) is converted into binary, the result is 1001100110. 1 sets the input signal to ON, and 0 sets the input signal to OFF. (Refer to table below)

D sub-socket pin No.	12	11	9	8	7	6	4	3	2	1
Cable option insulator color	Green (with black line)	White	Red (with black line)	White (with black line)	Pink	Light blue	Purple	Yellow	Orange	Brown
Input type	Bit 10 MSB	Bit 9	Bit 8	Bit 7	Bit 6	Bit 5	Bit 4	Bit 3	Bit 2	Bit 1 LSB
Binary [for 614 (decimal)]	1	0	0	1	1	0	0	1	1	0
Input signal	ON	OFF	OFF	ON	ON	OFF	OFF	ON	ON	OFF

■ Relation of preset memory and input signal

D sub-socket pin No.	3	2	1	Preset memory
Cable option insulator color	Yellow	Orange	Brown	
Input type	Bit 3	Bit 2	Bit 1	
Input signal	OFF	OFF	OFF	P1
	OFF	OFF	ON	P2
	OFF	ON	OFF	P3
	OFF	ON	ON	P4
	ON	OFF	OFF	P5
	ON	OFF	ON	P6
	ON	ON	OFF	P7
	ON	ON	ON	P8

MEMO

Names and functions of display/operation section

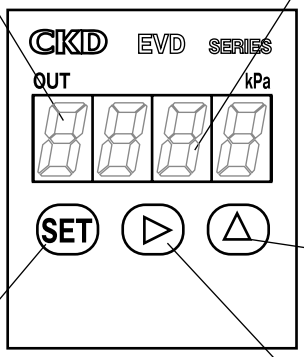

Output display (Red)

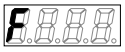

● "F" is displayed when confirming the function setting.

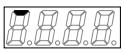

● "-" lights up when switch output is ON.
(Only when using switch output specifications)
* Blinks when overcurrent is detected.

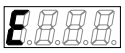

● "E" lights up when error output is ON.
* Blinks when overcurrent is

* If +/- should be specified or upper/lower limits have been set,

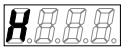
or
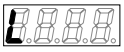
is displayed.

SET Key

● Use to enter each setting mode.
● When setting each data, this key is used to confirm the values, etc.

3-digit number LED display (green)

● Displays the pressure display and function setting details during RUN mode (pressure display).
* The setting mode No. and setting details are displayed when displaying details of function settings.
● When setting each data, the values, etc., are displayed.
● Error code No. is displayed at error output.

(Pressure display) (Setting details display) (Error output)

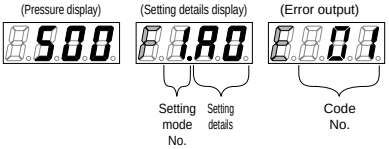

△ Key

● Setting details are sequentially displayed during RUN mode (pressure display).
● Use to select the setting when setting data.
● When setting each data, it is used to increase the values, etc.

▷ Key

● When setting each data, this key is used to select the numbers to each value, etc.

Function list

Screen display	Name	Display content (RUN mode)	Settings (Setting mode)	Setting Method
	Pressure Display	Secondary pressure is confirmed with the 3-digit numerical display LED. Unit: kPa		
Screen F1 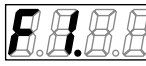	Input Signal Selection	The selected input signal and current target value (pressure conversion value) are confirmed. * When preset input (8-point) is selected, the currently selected preset No. and setting value are displayed.	For analog input: Analog input, preset memory input, or direct memory input is selected. For preset input/direct memory input, input the setting or this mode. For parallel input: Parallel input or direct memory input is selected. For direct memory input, input the setting for this mode.	603
Screen F2 	Zero /Span adjustment	The validity of the zero/span adjustment and the setting value are confirmed. When "valid," the F2.on - zero point adjustment value (L) and span point adjustment value (H) are alternately displayed. * The default setting is set with the full scale (--).	Select whether to use with full scale or zero/span adjustment. When zero/span adjustment is selected, the adjustment value for this mode can be set randomly.	604
Screen F3 	Auto-power OFF	Auto-power OFF enabled/disabled can be confirmed. * The default setting is invalid (--).	Auto-power OFF enabled/disabled can be selected. Note) The auto-power OFF time is set to approx. one minute. The time cannot be changed.	604
Screen F4 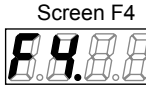	Switch Output * Switch Output Specifications only	The switch output enabled/disabled and setting value can be confirmed. When "Mode 1 enabled" is selected, the F4.0-- tolerance range setting value (L) and - + tolerance range setting value (H) are alternately displayed. When "Mode 2 enabled" is selected, the F4.1 - min. setting value (L) and - max. setting value (H) are alternately displayed. * The default setting is invalid (--).	Switch output enabled/disabled can be selected. When enabled, mode 1 or 2 can be selected. +/- tolerance values and max./min. values can be set as desired. Note) The hysteresis width cannot be set.	604
Screen F5 	Proportional value Change	Changes in the proportional value and its set level can be confirmed. When "Proportional Value Up" is selected, F5.H is displayed. When "Proportional Value Down" is selected, the F.5L - setting value is alternately displayed. * The default setting is standard (--).	Select whether to use the standard value or whether to change the proportional value. The proportional value level is set in this mode only when "Proportional Value Down" is selected. (10 stages)	605
* EVD-□100 only				

Operating method

RUN mode List of displayed contents

■ F1 (input signal selection) screen F1 display descriptions

The input signal and target value are alternately displayed.

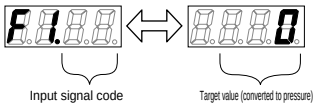

[Analog input]
EVD- □ -0 □□ - □ - □ , EVD- □ -1 □□ - □ - □ , EVD- □ -2 □□ - □ - □

Input signal code	Description
F1.A0	Analog 0 to 10 VDC input *
F1.A1	Analog 0 to 5 VDC input *
F1.A2	Analog 4 to 20 mADC input *
F1.P1 to F1.P8	Preset memory input The selected preset No. is displayed.
F1.dr	Direct memory input

[Digital input]
EVD- □ -P □□ - □ - □

Input signal code	Description
F1.PA	Parallel 10 bit input
F1.dr	Direct memory input

* One of [F1.A0], [F1.A1] and [F1.A2] is displayed based on the model.

■ F2 (zero/span adjustment) screen F2 display descriptions

The validity of the zero/span adjustment and the setting value are confirmed.
Note: This function is invalid if preset memory input or direct memory input is selected for F1 mode.

When disabled F2.--

When enabled F2.on ⇔ L.010 ⇔ H.090

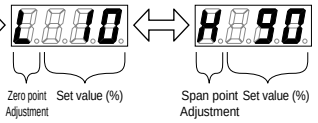

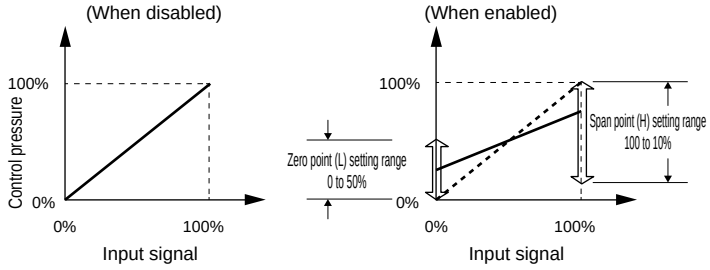

■ F3 (auto-power OFF) screen F3 display descriptions

Auto-power OFF enabled/disabled can be confirmed.

When disabled F3.--

When enabled F3.on

RUN mode List of displayed contents

■ F4 (switch output function) screen F4 display description (compatible model: EVD-□□-□□SN, EVD-□□-□□SP)

The switch output enabled/disabled and setting value can be confirmed.
Note) This is invalid with analog output specifications. (--) is displayed on the screen but cannot be used.

When disabled 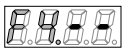

When in Mode 1 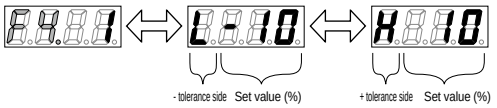

When in Mode 2 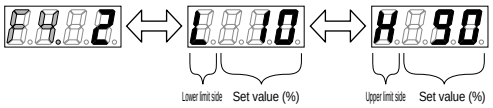

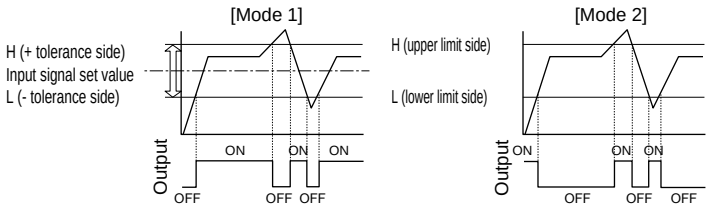

■ F5 (proportional value change) screen F5 display descriptions

⚠ Compatible models: EVD-1100-□□□-□-□, EVD-3100-□□□-□-□
Note) The screen is not displayed in EVD-□500/EVD-□900.

The validity of the proportional value and the set level are confirmed.

- When disabled: Control is applied with standard values (default value).
- When enabled: “Proportional value up” or “proportional value down” is selected.
  The set level is selected from ten stages only when “proportional value down” is selected.

[Effect of increasing proportional value]

While the effect varies with piping and load capacity conditions, a higher accuracy in control is achieved. Hunting occurs easily, requiring care during use.

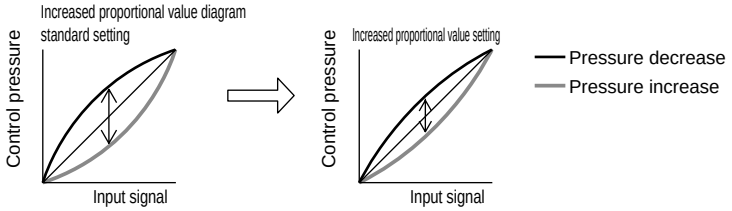

[Effect of decreasing proportional value]

If vibration occurs during blow applications or during a leakage test, stable control is ensured by decreasing the proportional value as shown below.

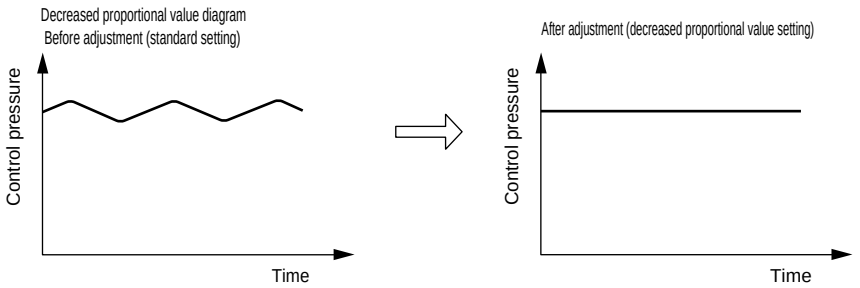

When disabled 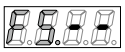

When the proportional value is increased (H) 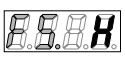

When the proportional value is decreased (L) 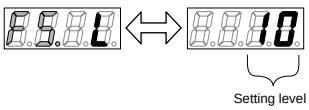

How to set setting mode

CAUTION **Release the key lock before changing setting details. (Refer to page 606)**

■ F1 (input signal selection function) Hold down the SET key for two seconds or more with the screen F1 displayed. F1 setting mode is entered.

● Changing the analog input signal selection
Note: Analog input specifications cannot be changed.

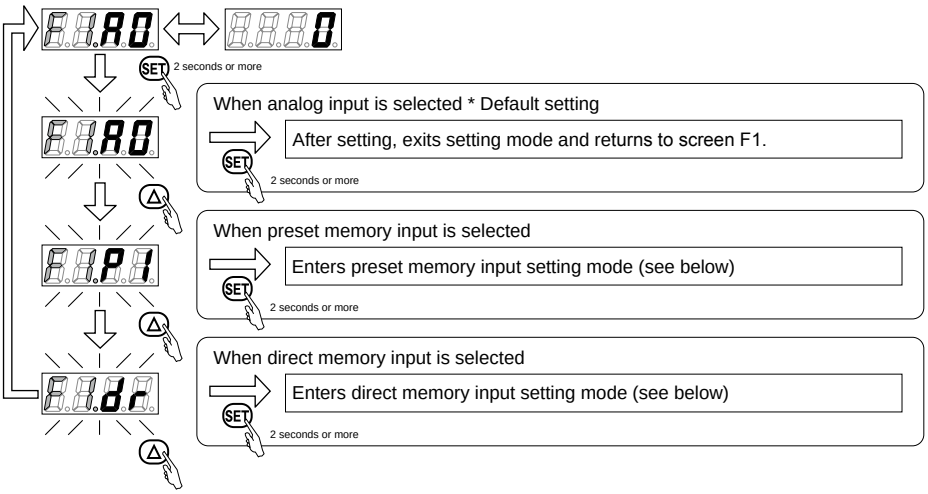

Exits input signal selection setting mode, and returns to screen F1.

● Changing parallel input signal selection

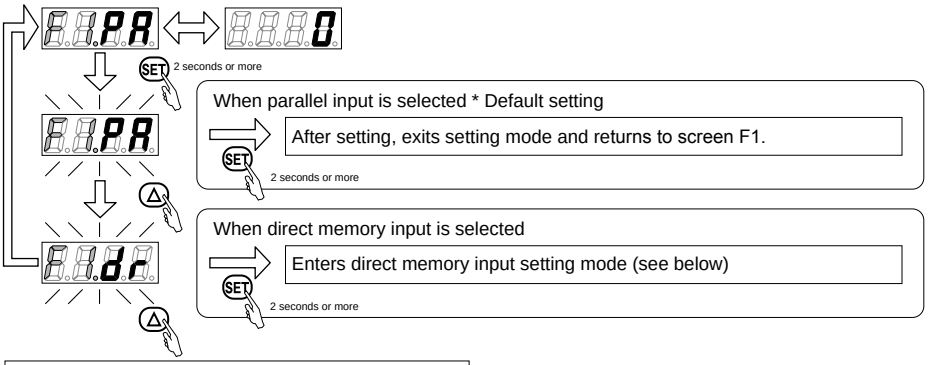

Exits input signal selection setting mode, and returns to screen F1.

● Using preset memory input setting mode
* Hold down the SET key for two seconds or longer with screen F1 preset memory input set.

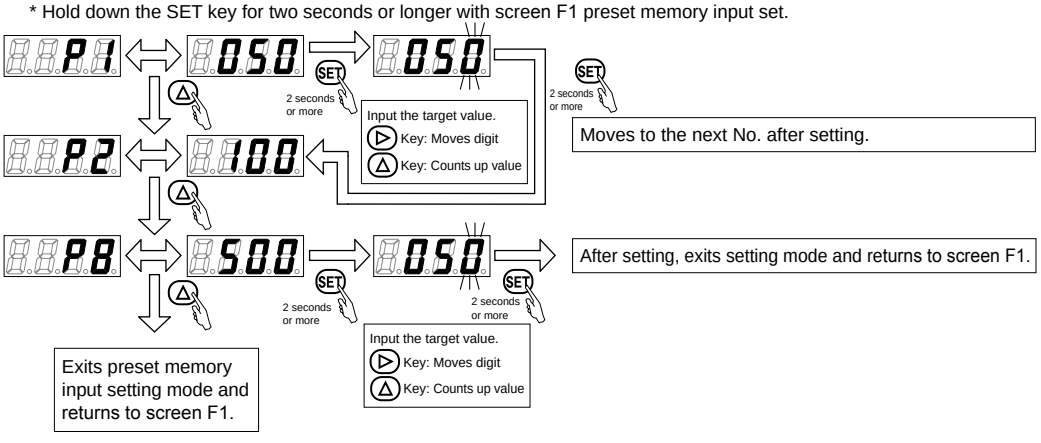

● Using direct memory input setting mode
* Hold down the SET key for two seconds or longer with screen F1 preset memory input set.

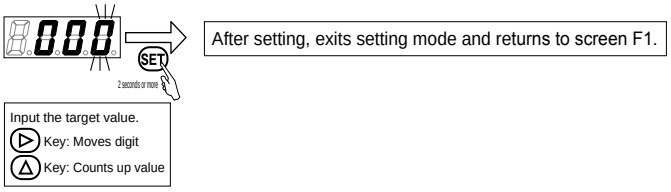

How to set setting mode

CAUTION **Release the key lock before changing setting details. (Refer to page 606)**

■ F2 (zero/span adjustment function) Hold down the SET key for two seconds or more with the screen F2 displayed. F2 setting mode is entered.

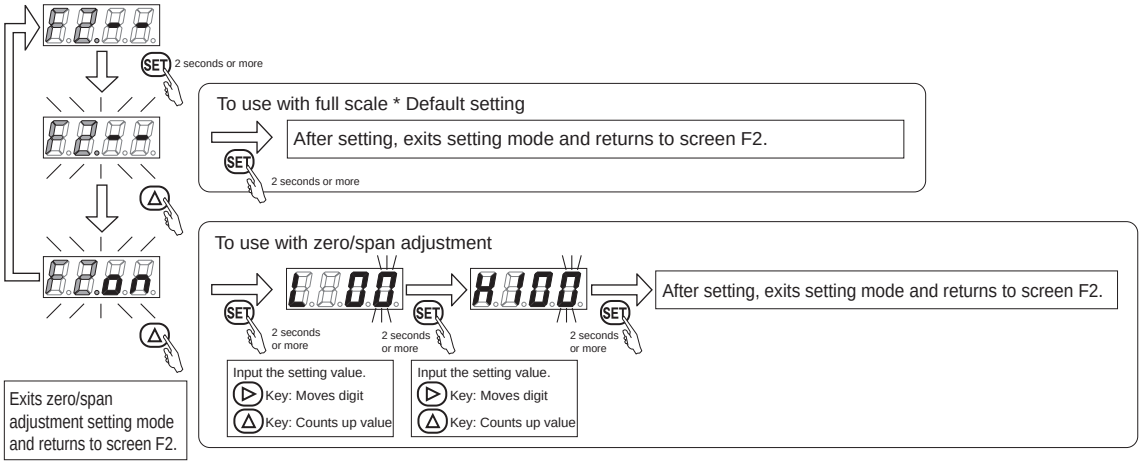

* This function cannot be used when preset memory input or direct memory input is selected with F1 (input signal selection function). Only full scale can be used.

■ F3 (auto-power OFF function) Hold down the SET key for two seconds or more with the screen F3 displayed. F3 setting mode is entered.

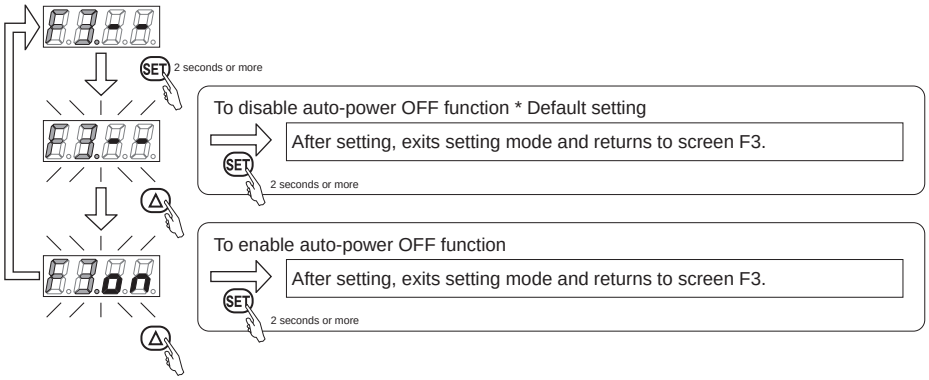

* If any key is pressed during auto-power OFF, the display illuminates.
* The auto-power OFF time is set to approx. one minute. The time cannot be changed.

■ F4 (switch output function) Hold down the SET key for two seconds or more with the screen F4 displayed. F4 setting mode is entered.
(Compatible models: EVD-□□-□□SN, EVD-□□-□□SP)
Note: This is invalid with analog output. (--) is displayed on the screen but cannot be used.

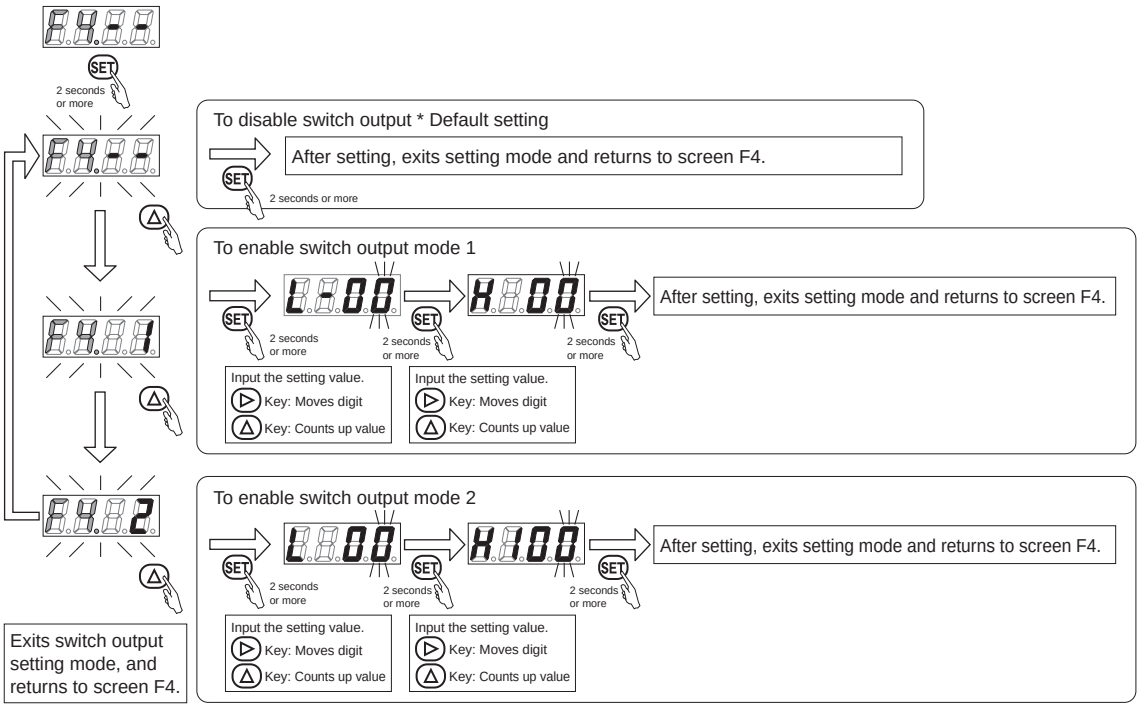

How to set setting mode

CAUTION **Release the key lock before changing setting details. (Refer to page 606)**

■ F5 (Proportional value change function) Hold down the SET key for two seconds or more with the screen F5 displayed. F5 setting mode is entered.

⚠ Compatible models: EVD-1100-□□□-□-□, EVD-3100-□□□-□-□
Note) The screen is not displayed in EVD-□500/EVD-□900.

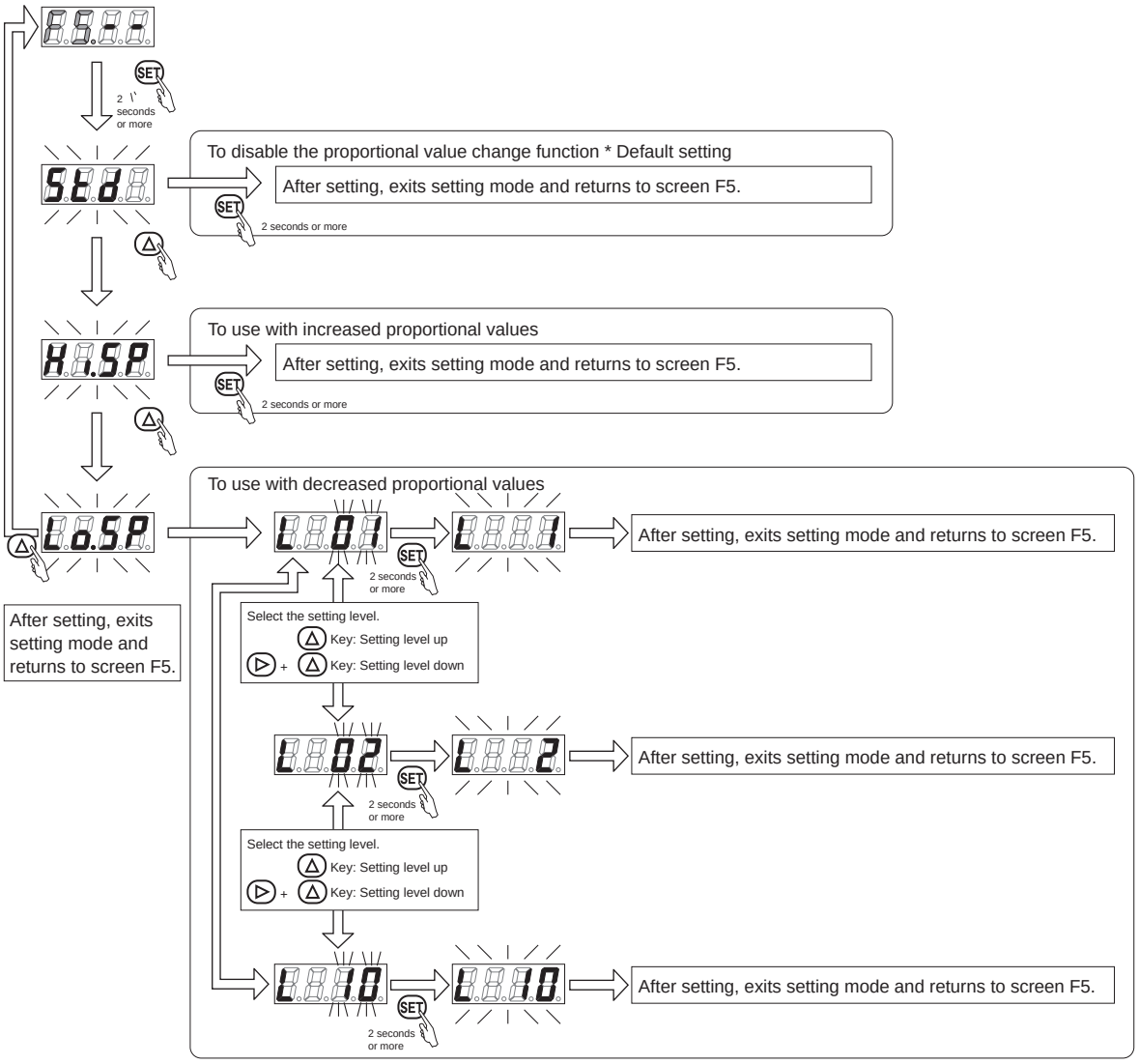

* When used with a decreased proportional value, operation takes place with the set level displayed on the screen when the set level is selected. When the set level is decided, press the “SET key” for two seconds or longer to enter the value.

Key lock

This function prevents incorrect operation. Release the key lock before changing settings.

● Operating the key lock

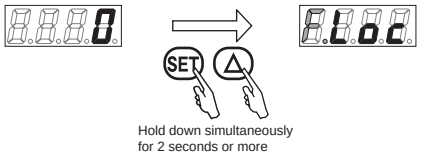

● Releasing the key lock

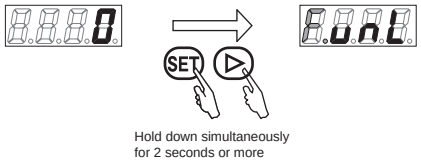

* The key is locked every time the power is turned ON.

Setting range of functions

Function	Settings display screen	Setting details	Setting specifications
F1: Input signal selection function Preset memory input		Set the target value (pressure).	Range: *1 □100 / 000 to 100 □500 / 000 to 500 □900 / 000 to 900 Min. set unit: 1 kPa
F1: Input signal selection function Direct memory input		Set the target value (pressure).	Range: *1 □100 / 000 to 100 □500 / 000 to 500 □900 / 000 to 900 Min. set unit: 1 kPa
F2: Zero/span adjustment function		Set the zero point adjustment value.	Range: 00 to 50 *2 Min. set unit: 1%
		Set the span point adjustment value.	Range: 100 to 010 *2 Min. set unit: 1%
⚠ F4: Switch output function When in Mode 1		Set the "-" tolerance value.	Range: -00 to -50 Min. set unit: -1%
		Set the "+" tolerable value.	Range: 00 to 50 Min. set unit: 1%
⚠ F4: Switch output function When in Mode 2		Sets the min. value.	Range: 00 to 90 *2 Min. set unit: 1%
		Sets the max. value.	Range: 100 to 010 *2 Min. set unit: 1%
⚠ F5: Proportional value change function Increased proportional value	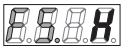	The level cannot be set.	
⚠ F5: Proportional value change function Decreased proportional value	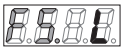	Set the level.	Range: 01 to 10 Min. set unit: 1

*1: If set to a pressure of 1% F.S. or less, it may not be possible to control pressure due to the effect of residual pressure.
*2: The setting range may be limited depending on the setting value.

⚠ F4: The switch output function is for the switch output only. Cannot be used with the analog output.
Compatible models: EVD-□□-□□SN, EVD-□□-□□SP

⚠ F5: The proportional value change function is limited to the pressure range 100 kPa.
Compatible model: EVD-□100-□□□

Default mode settings (Initialization)

Screen display	Name	Settings display	Setting details
Screen F1	Input signal selection	Analog Parallel A0.A1.A2	Analog/ parallel input
Screen F2	Zero/span adjustment		Full scale (zero/span adjustment disabled)
Screen F3	Auto-power OFF		Auto-power off disabled
Screen F4	Switch output * Switch output specifications only		Switch output disabled
Screen F5	Proportional value change * EVD-□100 only		Standard setting (Proportional value change disabled)

[Initializing]

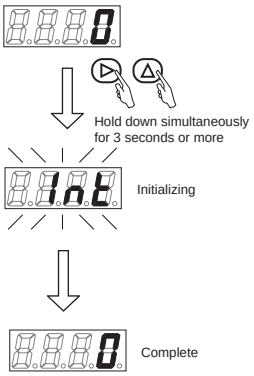

Error code

Error display	Cause	Countermeasures
E.001	The power voltage is not within the rating. Detected at 19.5 VDC or less detection accuracy ±10%	Check the product's specifications, set the power voltage within the rated range, then turn the power ON again.
E.002	The input signal exceeded the rating range. Detected at input 110% and over detection accuracy ±1%	Check the product's input signal, set the input signal within the rated range, then turn the power ON again.
E.003	An error occurred during EEPROM reading or writing.	Contact your nearest CKD branch or dealer.
E.004	An error occurred during memory reading or writing.	Contact your nearest CKD branch or dealer.
E.005	Secondary pressure did not reach the set value for five seconds or more consecutively. (20% F.S. or less of the set value was not attained Detection accuracy ±6% F.S.)	Check primary pressure provide pressure within the rating range, then turn the power ON again. Check that there are no leaks from pipes, fitting, or other devices. Correctly connect, then turn power ON again. If the error is not resolved, contact your nearest CKD branch or dealer.
	The switch output's overcurrent protection circuit has operated.	Check whether load current exceeds the rating. Correctly connect, then turn the power ON again.

When the above errors occur, the error displays and error output turns ON.

Glossary

Max. working pressure

Maximum value of primary side pressure which can satisfy the specifications. Differs according to the pressure specifications.

Min. working pressure

The primary pressure value required to control up to the full scale pressure. Differs according to the pressure specifications.

Proof pressure

Pressure value under which the electro pneumatic regulator will not break even if momentarily applied. The supply side and output side guaranteed values are given separately to limit the withstand pressure of the pressure sensor mounted on the secondary side.

Pressure control range

Indicates the pressure which can be controlled. Depending on the product, residual pressure may be generated. With the EVD, 1% F.S. or less residual pressure is generated when the input signal is 0% F.S.

Note: This is different from the guaranteed accuracy range. Refer to the hysteresis and linearity items below.

Hysteresis (measurement circuit 1)

The difference (D1) of the rise curve and lower curve when the input signal is reciprocated once between 0% and 100%, indicated as a percentage of the full scale (F.S.).

(Hysteresis) = Maximum value of D1/FS control pressure x 100 [%]

Note: The scope of warranty will differ according to the product.
For EVD, 10% to 90% F.S. is the scope of warranty.

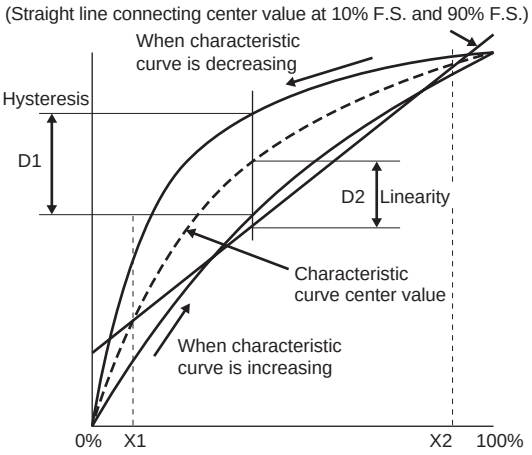

Linearity (measurement circuit 1)

The input signal (X1)% F.S. and (X2)% F.S. when the input signal is reciprocated once between 0% F.S. and 100% F.S. The difference (D2) from the reference line connecting the % F.S. is indicated as a percentage of the full scale (F.S.). (Linearity) = Maximum value of D2/FS control pressure x 100 [%]

Note: The scope of warranty will differ according to the product.
For EVD, it is X1=10% F.S., X2=90% F.S.

Resolution (measurement circuit 1)

The min. value of the input signal generated when the control pressure changes, indicated as a percentage of the full scale (F.S.). The input signal is pressurized from 0% F.S. to 15% F.S. and held for 10 seconds or longer and the input signal is

The value is indicated as the difference with the input signal obtained, then gradually increased until the control pressure starts to rise again. Conducted in the same way for input signal 50% F.S. and 85% F.S.

Repeatability (measurement circuit 1)

The maximum value of the control pressure variation when the same setting value is repeatedly applied is indicated as a percentage of the full scale (F.S.).

The value is calculated with the variation of the control pressure (D3) when the input signals 0% F.S. and 50% F.S. are repeatedly applied.

(Repeatability) = D3 / FS control pressure x 100 [%]

Temperature characteristics

Indicates the fluctuation of the control pressure according to changes in the ambient temperature (reference temperature 25°C) converted per 1°C.

The characteristics are indicated for the zero point and span width.

Maximum flow rate (measurement circuit 2)

Indicates flow rate possible at control pressure 100% F.S.

Relief characteristics (measurement circuit 3)

Indicates the relation of the control pressure and exhaust flow rate when back pressure is applied on the secondary side from an external source in the pressure control state.

The relief flow rate when the back pressure is gradually increased is measured.

Step response (measurement circuit 1)

Indicates the time for the control pressure to reach the set pressure in respect to a stepped input signal.

Measures the time for the control pressure to reach the setting value ±5% F.S. range after the input signal is applied.

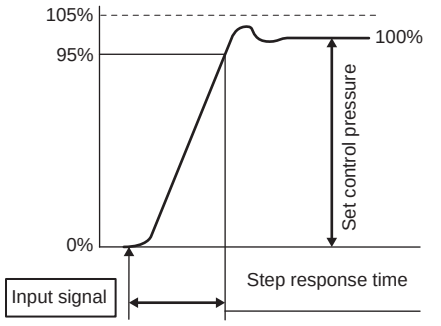

(Response time) = Time to reach within ±5% of final value

CKD measurement circuit

(Measurement circuit 1)

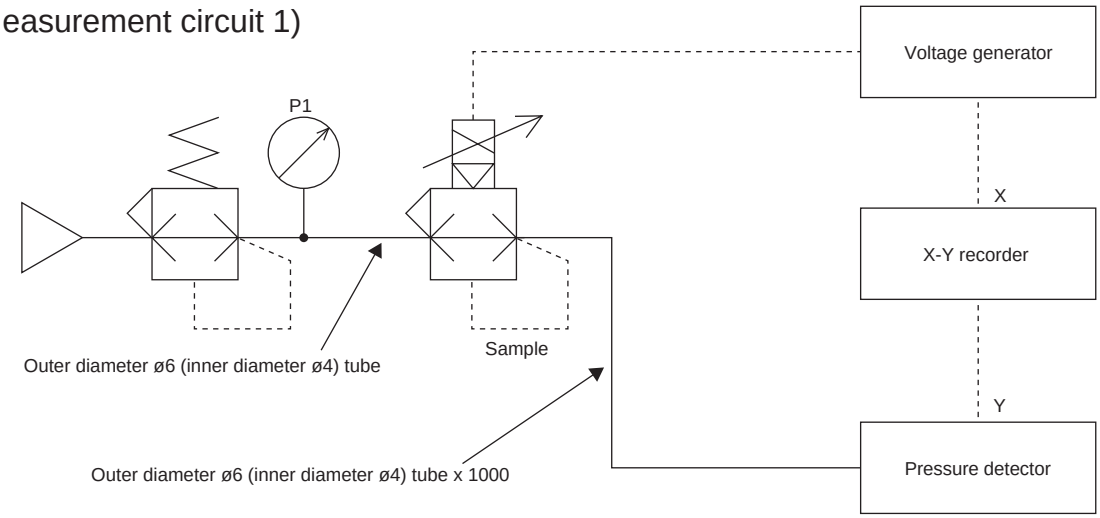

(Measurement circuit 2)

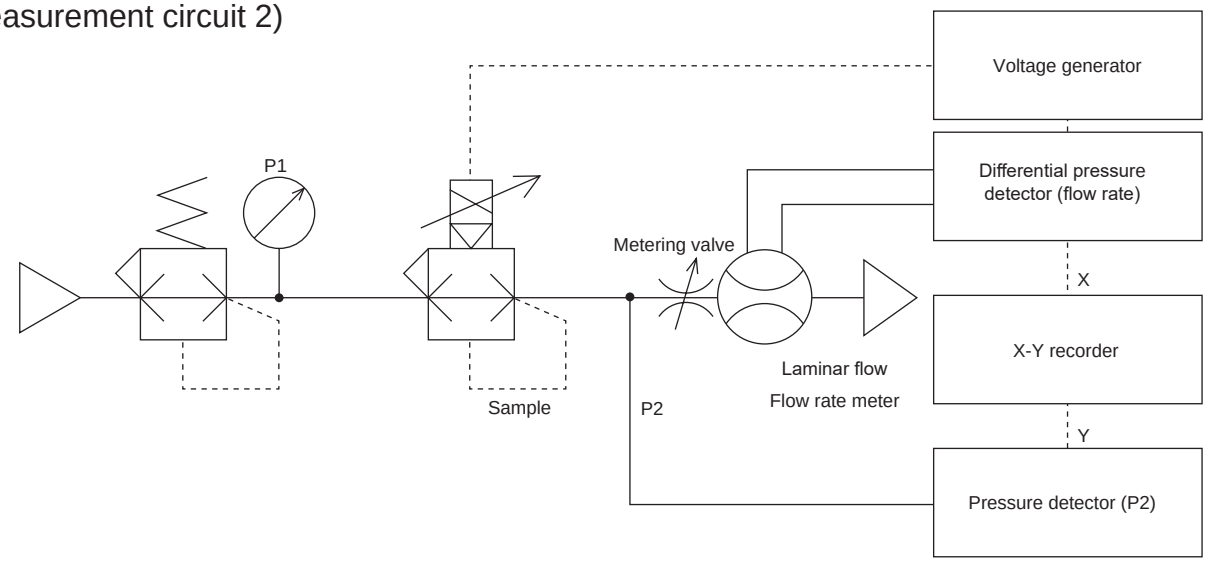

(Measurement circuit 3)

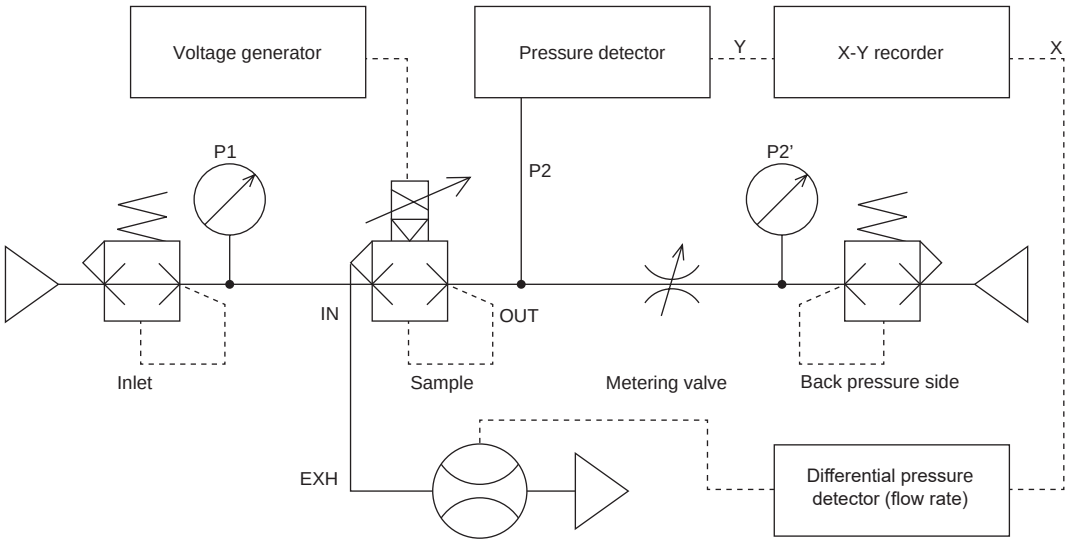

Ever advancing evolution!

Far more variations of pressure control available

The ideal pressure for your equipment can now be selected.
You can better optimize your equipment's air pressure control.



High-precision pressure control

Top class in the industry

The new control method, with built-in microcomputer, achieves higher-precision pressure control.

Unit: kPa

Item \ Control pressure	100	200	300	400	500	600	700	800	900
Hysteresis	0.3	0.6	1.5			3			
Linearity	±0.5	±1	±2.5			±5			
Resolution	0.1	0.2	0.5			0.9			
Repeatability	0.2	0.4	1			1.8			

Note: Values at F.S.

Temperature stability

Improved stability

Built-in temperature compensation reduces the influence of ambient temperatures. No need for pressure correction due to equipment temperature increases.

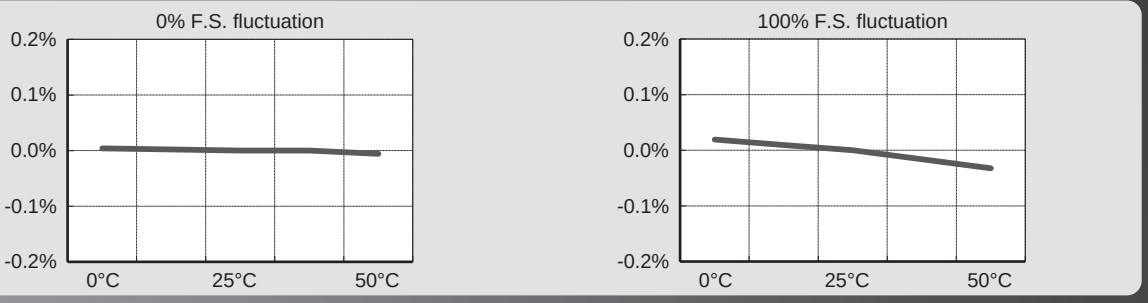

* These are typical values and not guaranteed values.

Pressure stability

New function

Residual pressure 0 when the input signal is 0%.

Newly added function allows **selection of pressure control patterns.**

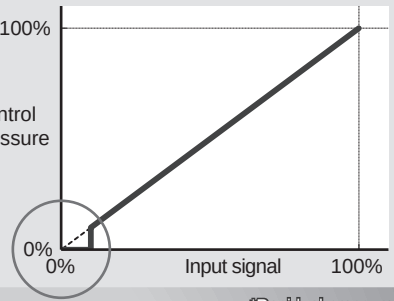

*Residual pressure is generated when the secondary circuit is closed.

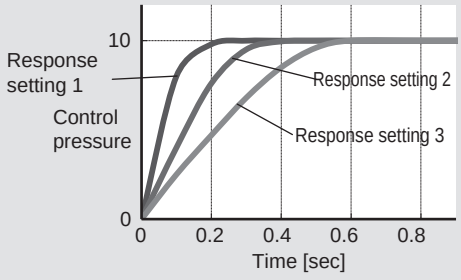

* These are typical values and not guaranteed values.

EVR Series

High precision electro pneumatic regulator

Astounding accuracy and stability!

Easy operation

Visualized operational status

Two switches allow various settings

Zero point adjustment

Input signal 0% pressure adjustment

Span point adjustment

Input signal 100% pressure adjustment

Pressure control pattern selection

Selection from three patterns



Operation indicator

"Green" displayed at control pressure

"Red" displayed when outside the adjusting range

Normal status



Abnormal



Compatibility/installation

Easy replacement

- **Compatible mounting** with the conventional product (EV2500).
- **Two types of connectors are available.**

Straight



L-type



- **Manifold is also usable.**

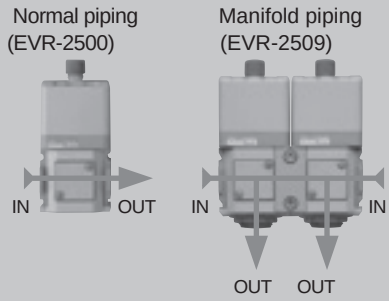

System application examples

Fluid pressure control

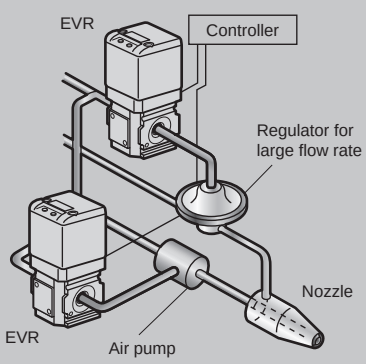

Balancer tension control

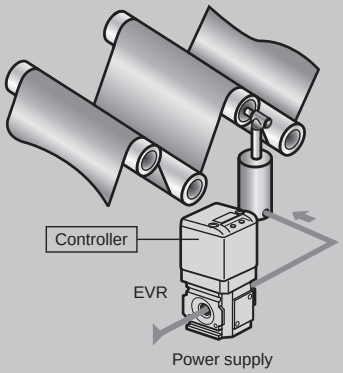

Grinding force control

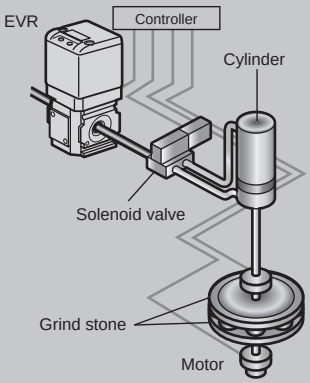

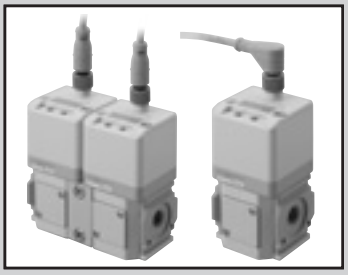

High precision electro pneumatic regulator

EVR Series

JIS symbol

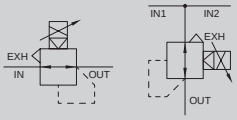

Specifications

Model No. / Item		EVR-2100(2109)	EVR-2200(2209)	EVR-2300 (2309)	EVR-2400 (2409)
Working fluid		Clean compressed air (JIS B8392-1:2012 (ISO 8573-1:2010) [1:3:2])			
Max. working pressure		200 kPa	400 kPa	450 kPa	600 kPa
Min. working pressure		Set pressureForce+50 kPa			
Proof pressure	Inlet	300 kPa	600 kPa	650 kPa	900 kPa
	Output side	150 kPa	300 kPa	450 kPa	600 kPa
Pressure control range *1		5to100 kPa	5to200 kPa	5to300 kPa	5to400 kPa
Power supply voltage		24 VDC±10% (stabilized power supply with ripple rate 1% or less)			
Current consumption		0.1A or less			
Input signal (input impedance)		0 to 10 VDC (6 kΩ) 0 to 5 VDC (10 kΩ) 4 to 20 mADC or 1 to 5 VDC (250 Ω)			
Analog output (load impedance)		1to5VDC (10kΩor more)			
Performance *2 (Response setting 1))	Hysteresis	0.3 kPa or less	0.6 kPa or less	1.5 kPa or less	
	Linearity	Within ±0.5 kPa	Within ±1.0 kPa	Within ±2.5 kPa	
	Resolution	0.1 kPa or less	0.2 kPa or less	0.5 kPa or less	
	Repeatability	0.2 kPa or less	0.4 kPa or less	1.0 kPa or less	
Temperature characteristics (Setting 1) Reference temperature 25°C	Zero point fluctuation	±0.06 kPa/°C	±0.12 kPa/°C	±0.30 kPa/°C	
	Span fluctuation	±0.06 kPa/°C	±0.12 kPa/°C	±0.30 kPa/°C	
Max. flow rate (ℓ/min(ANR))		250	400	480	600
Step response (Response setting 1)	With no load *3	0.2 sec. or less			
Ambient temperature		5 to 50°C			
Mounting orientation		Free			
Degree of protection		IP64 or equivalent (body), IP67 (cable connector) *4			
Weight		300 g (320 g)			

Model No. / Item		EVR-2500 (2509)	EVR-2600 (2609)	EVR-2700 (2709)	EVR-2800 (2809)	EVR-2900 (2909)
Working fluid		Clean compressed air (JIS B8392-1:2012 (ISO 8573-1:2010) [1.3.2])				
Max. working pressure		700 kPa	750 kPa	850 kPa	950 kPa	1,000 kPa
Min. working pressure		Set pressure +50kPa				
Proof pressure	Inlet	1,050 kPa	1,120 kPa	1,200 kPa	1,400 kPa	1,500 kPa
	Output side	750 kPa	900 kPa	1,050 kPa	1,200 kPa	1,350 kPa
Pressure control range *1		5 to 500 kPa	10 to 600 kPa	10 to 700 kPa	10 to 800 kPa	10 to 900 kPa
Power supply voltage		24 VDC±10% (stabilized power supply with ripple rate 1% or less)				
Current consumption		0.1A or less				
Input signal (input impedance)		0 to 10 VDC (6 kΩ) 0 to 5 VDC (10 kΩ) 4 to 20 mADC or 1 to 5 VDC (250 Ω)				
Analog output (load impedance)		1 to 5 VDC (10 kΩ and over)				
Performance *2 (Response setting 1))	Hysteresis	1.5 kPa or less	3.0 kPa or less			
	Linearity	Within ±2.5 kPa	Within ±5.0 kPa			
	Resolution	0.5 kPa or less	0.9 kPa or less			
	Repeatability	1.0 kPa or less	1.8 kPa or less			
Temperature characteristics (Setting 1) Reference temperature 25°C	Zero point fluctuation	±0.30 kPa/°C	±0.60 kPa/°C			
	Span fluctuation	±0.30 kPa/°C	±0.60 kPa/°C			
Max. flow rate (ℓ/min(ANR))		800	850	900	950	1,000
Step response (Response setting 1)	With no load *3	0.2 sec. or less				
Ambient temperature		5 to 50°C				
Mounting orientation		Free				
Degree of protection		IP64 or equivalent (body), IP67 (cable connector) *4				
Weight		300 g (320 g)				

*1: 1% F.S. or less input signal stops control.

*2: The conditions for the values above are: 24±0.1V DC power supply voltage, 25±3°C ambient temperature, no load, working pressure from +0.05 MPa max. control pressure to the max. working pressure, and 10 to 100% control pressure.
In addition, when the secondary side is a closed circuit, pressure fluctuations will occur if the product is used for blowing or for similar applications.

*3: Working pressure: Max. working pressure, step amount:
- 50%F.S.→100%F.S.
- 50% F.S. → 60% F.S.
- 50% F.S. → 40% F.S.

*4: The degree of protection of body IP64 is applied only when installed with facing connector upward.

How to order

EVR-2 50 0 - 0 8 - E2 - S1 C

- 50 → Ⓐ Pressure control range
- 0 → Ⓑ Body
- 0 → Ⓒ Input signal
- 8 → Ⓓ Port size
- E2, S1, C → Ⓔ Option

Code	Description	
Ⓐ Pressure control range		
10	5 to 100 kPa	
20	5 to 200 kPa	
30	5 to 300 kPa	
40	5 to 400 kPa	
50	5 to 500 kPa	
60	10 to 600 kPa	
70	10 to 700 kPa	
80	10 to 800 kPa	
90	10 to 900 kPa	
Ⓑ Body		
0	Single unit	
9	Manifold	
Ⓒ Input signal		
0	0 to 10 VDC	
1	0 to 5 VDC	
2	4 to 20 mADC or 1 to 5 VDC	
Ⓓ Port size		
8	Rc1/4	
8G	G1/4	(*1)
8N	NPT1/4	(*1)
Ⓔ Option		
Exhaust option		
Blank	Rc1/4 port	
E2	With silencer	
Cable option		
Blank	None	
S1	Straight	1 m attached
S3		3 m attached
L1	L type	1 m attached
L3		3 m attached
Bracket option		
Blank	None	
C	C-bracket attached	
B	B-bracket attached	(*2)

⚠ Precautions for model No. selection

*1: Port size: Port size of IN port and OUT port. E2 exhaust option will be supplied with “8G” and “8N”.
*2: 9 (manifold) body and B (B-bracket) cannot be selected at the same time together.

● Discrete option (cable, exhaust, bracket) model No.

EVR- S1

Ⓔ Option

(Note) Discrete exhaust option model No. for Rc1/4 is EVR-E.

Internal structure and parts list

● EVR-2□00

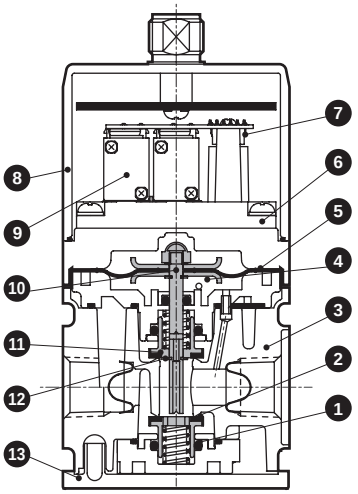

● EVR-2□09

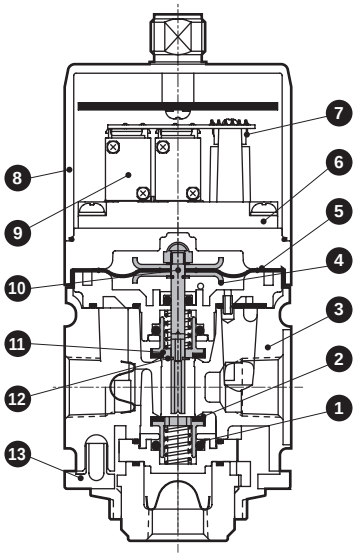

No.	Part name	Material
1	O-ring	Fluoro rubber
2	Bottom valve	Copper alloy, special nitrile rubber
3	Body	Aluminum alloy die-casting
4	Disc	Aluminum alloy
5	Diaphragm	Special nitrile rubber
6	Valve base	Polyphenylene sulfide resin
7	Pressure sensor	(Diffused semiconductor)
8	Housing	ABS resin
9	2-way valve	-
10	Rod	Stainless steel
11	Top valve	Copper alloy, special nitrile rubber
12	E-type snap ring	Steel
13	Plate cover	ABS resin

Cannot be disassembled

Dimensions

● EVR-2□00

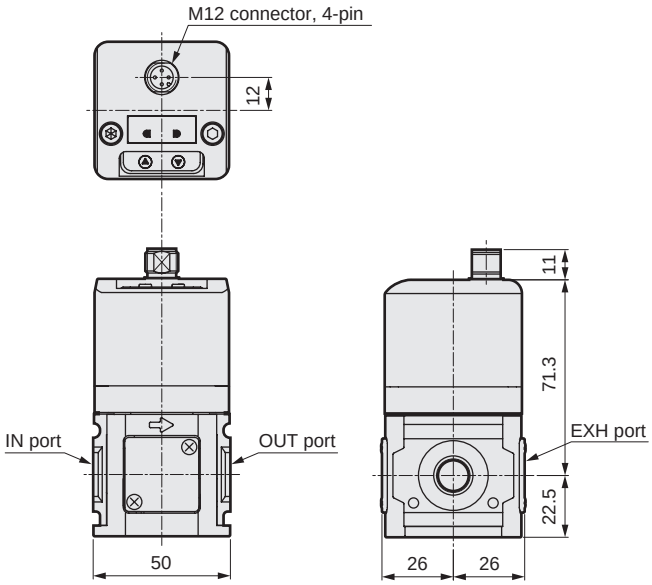

● EVR-2□09

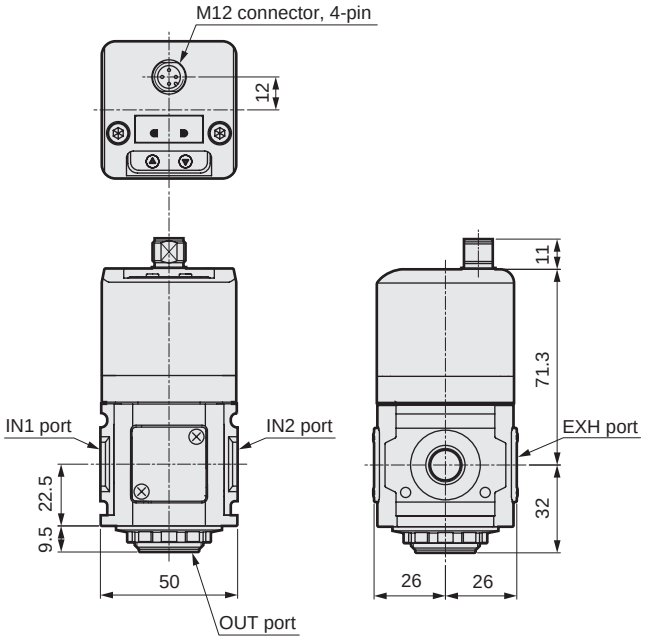

I/O characteristics

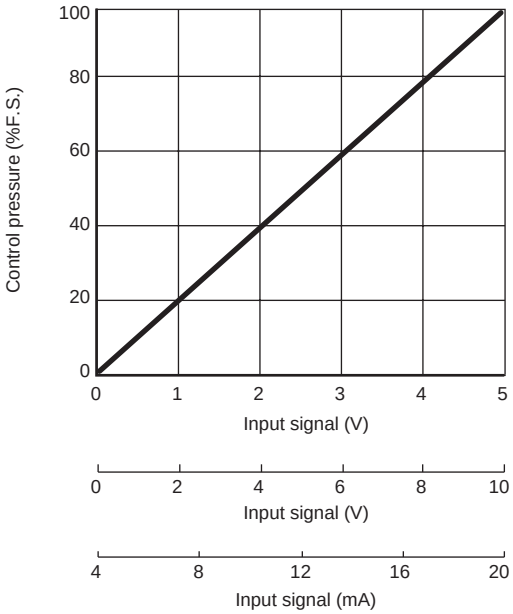

Analog output

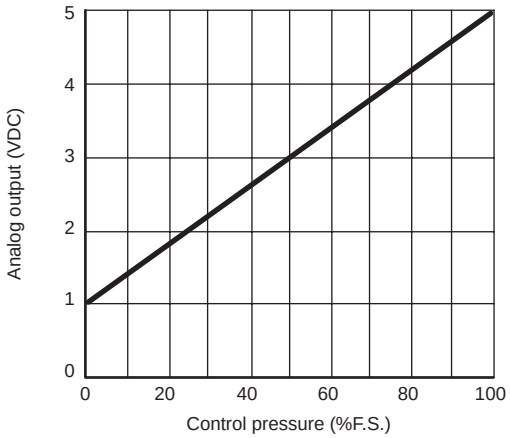

Step response characteristics (response setting 1)

● EVR-2100

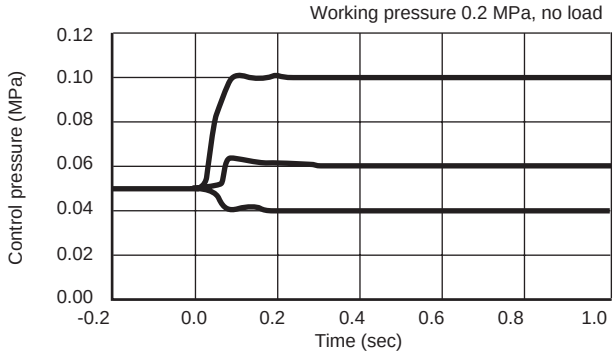

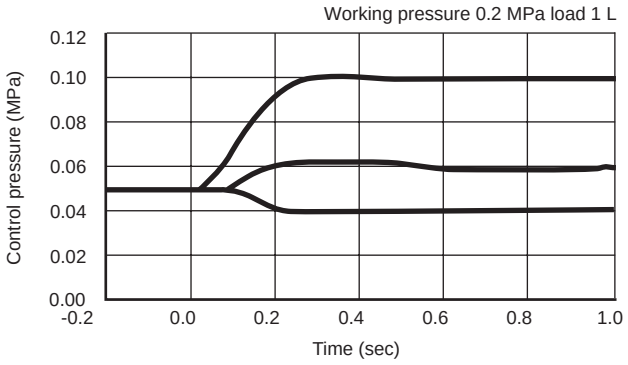

● EVR-2200

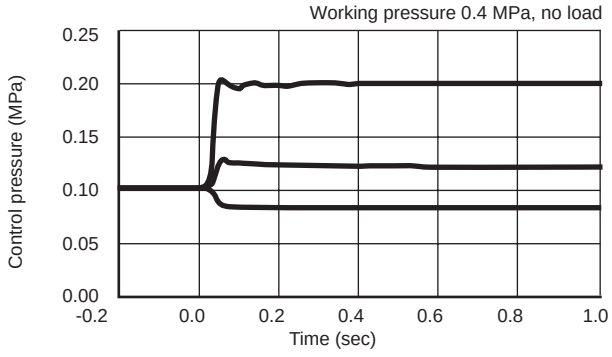

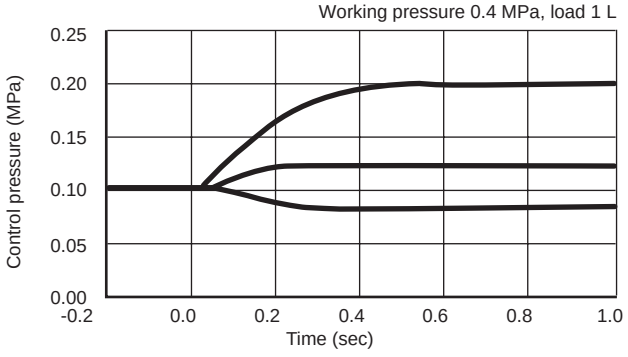

Step response characteristics (response setting 1)

● EVR-2300

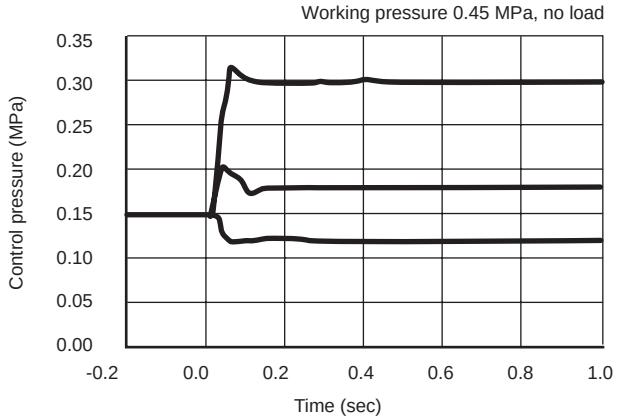

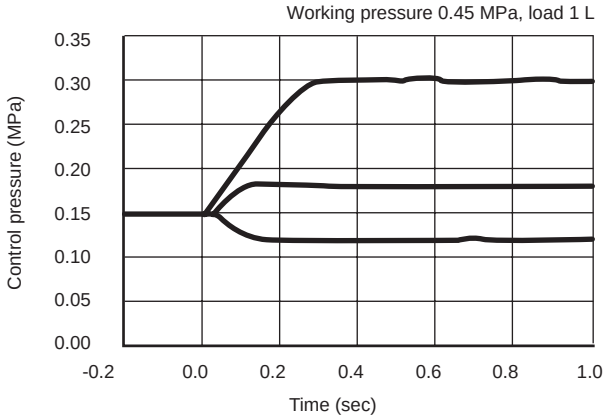

● EVR-2400

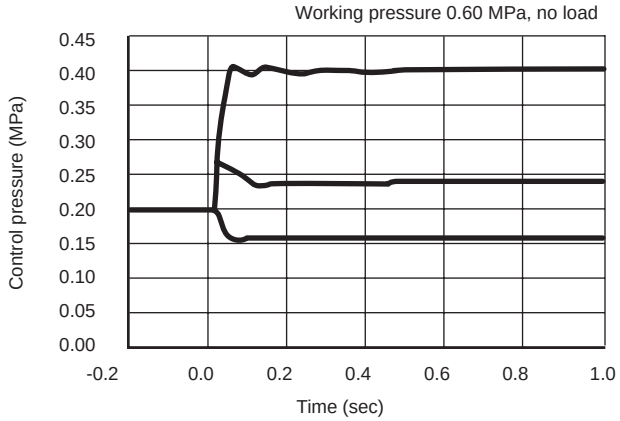

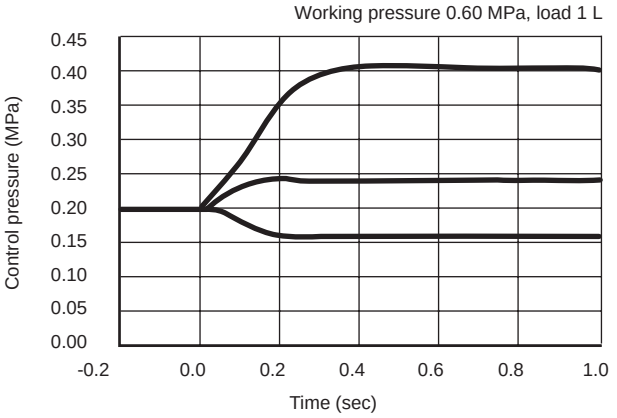

● EVR-2500

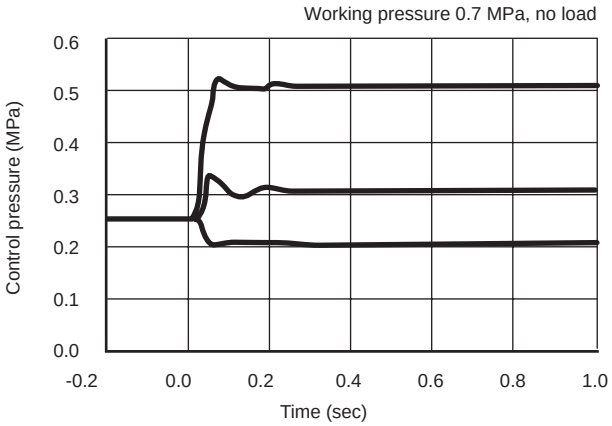

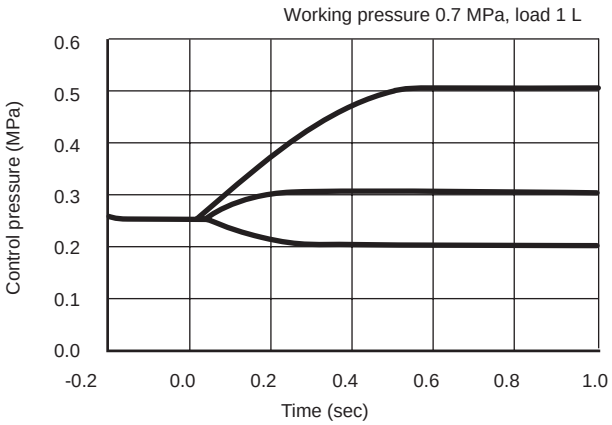

● EVR-2600

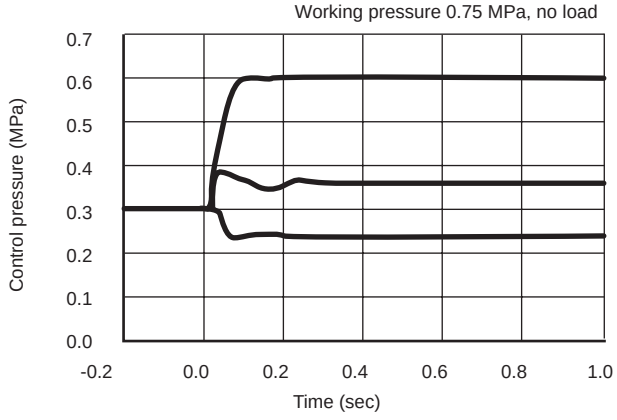

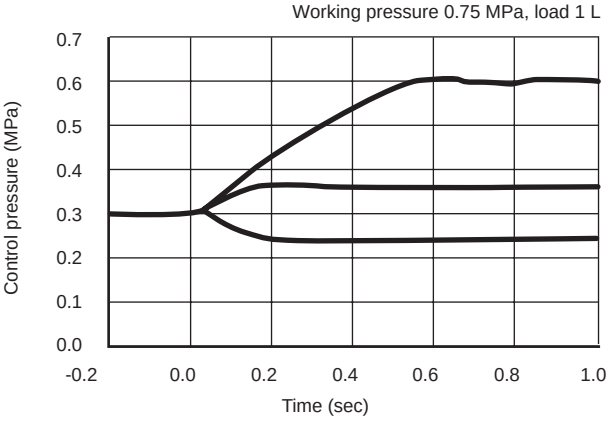

Step response characteristics (response setting 1)

● EVR-2700

Working pressure 0.85 MPa, no load

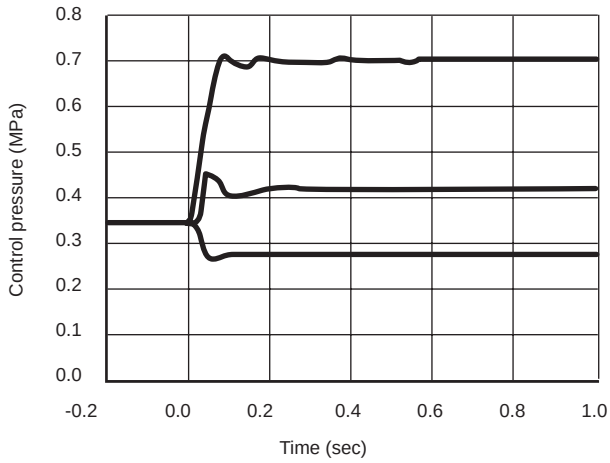

Working pressure 0.85 MPa, load 1 L

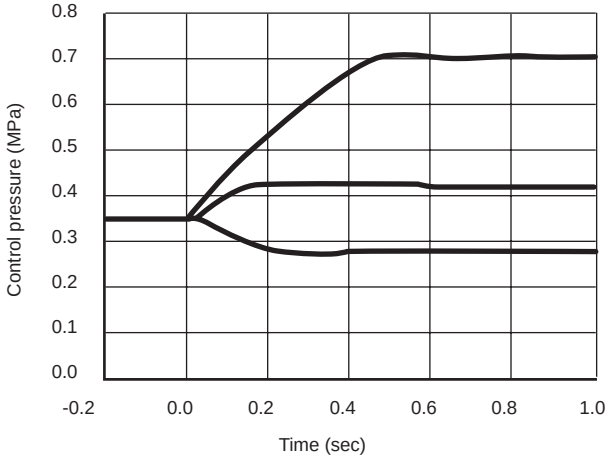

● EVR-2800

Working pressure 0.95 MPa, no load

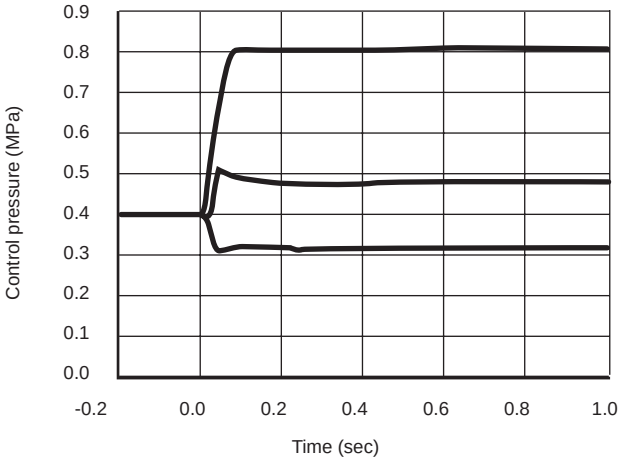

Working pressure 0.95 MPa, load 1 L

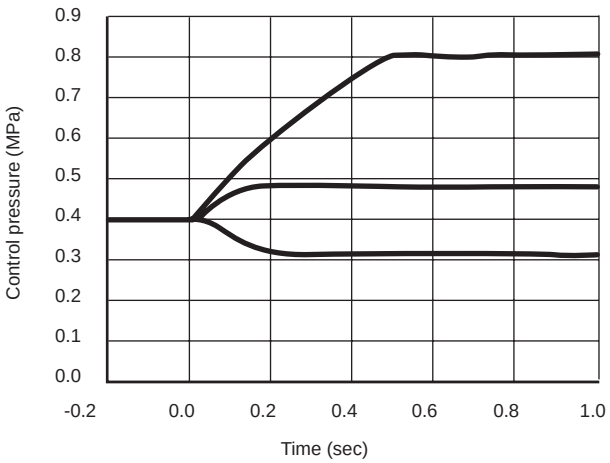

● EVR-2900

Working pressure 1.0 MPa, no load

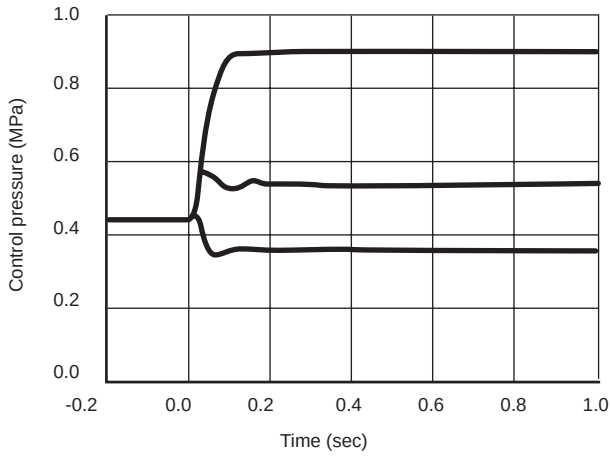

Working pressure 1.0 MPa, load 1 L

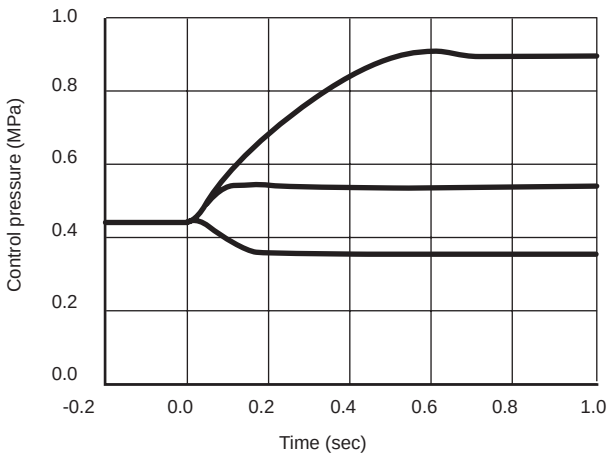

Optional dimensions

Embedded type option

● Standard: Blank (-E)

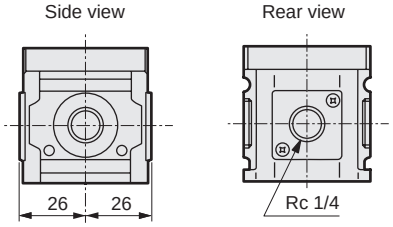

● Dedicated silencer: -E2

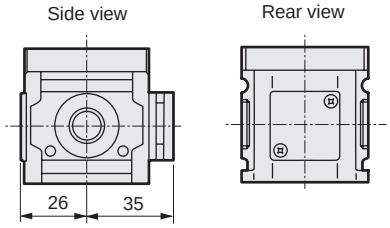

Weight: 10g

Bracket option

● B-bracket (Floor mounted): -B

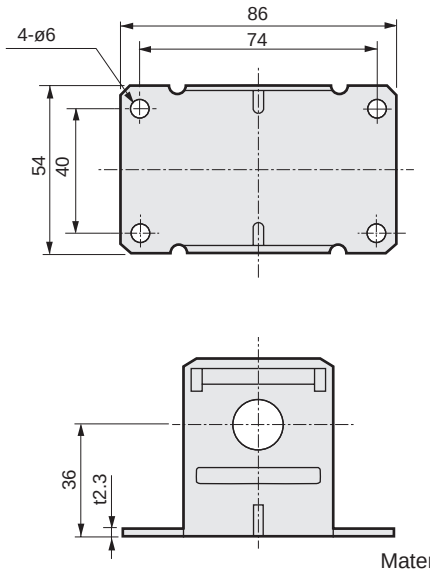

Material : SPCC
Treatment: Zinc plated
Weight : 165g

● C-bracket (Wall mounted): -C

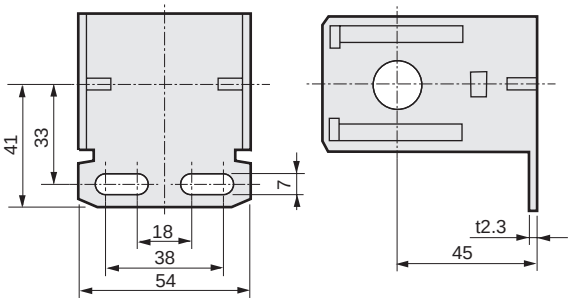

Material : SPCC
Treatment: Zinc plated
Weight : 148g

Cable option

● Straight (-S1, -S3)

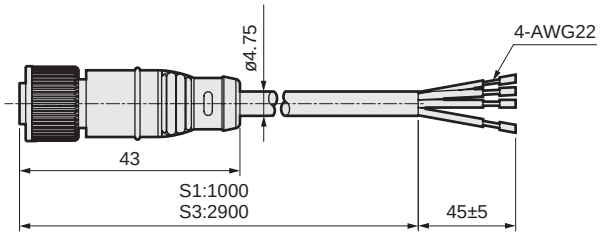

● L type (-L1, L3)

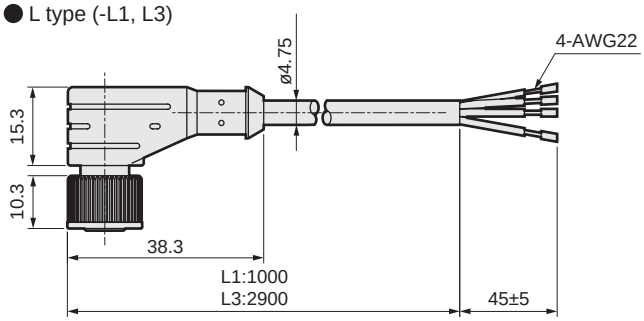

* Cable/connector

* Pin No.	Insulator color	Applications	Type of input signal			Weight g
			0 to 10 V	0 to 5 V	4 to 20 mA 1 to 5 V	
1	Brown	Power supply+⊕	24 V			S1:50 S3:135 L1:55 L3:140
2	Black	——	Analog 1 to 5 V			
3	Blue	Common	0 V			
4	White	Input signal	0 to 10 V	0 to 5 V	4 to 20 mA 1 to 5 V	

If a cable connector is not used, the following recommended cable sockets can be used.

Screw fixing type	ELW1KA4012 Correns (Hirschmann)
Straight (solder)	XS2C-D421 OMRON
L type (solder)	XS2C-D422 OMRON

Optional dimensions

Other peripheral devices

● Example of system upgrading

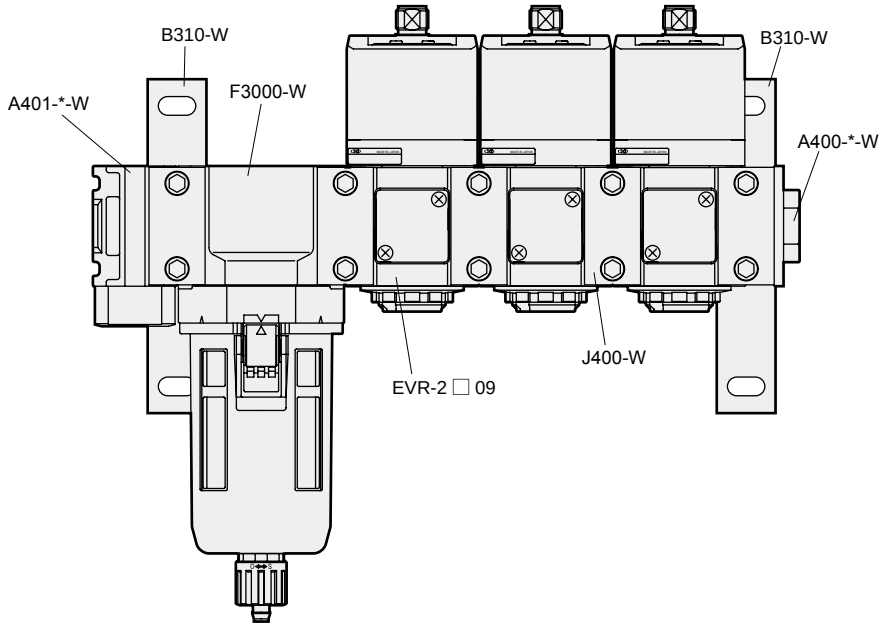

● A400-8/10/15-W
Pipe adaptor set

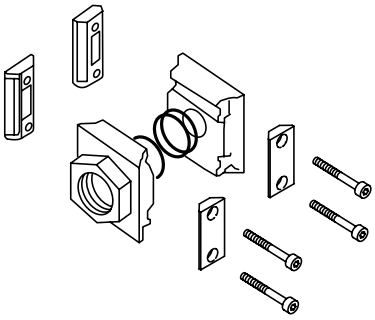

Weight: 160g
Material: Aluminum alloy die-casting
Painting

● A400-8-W/10-W/15-W-B31W
Pipe adaptor set

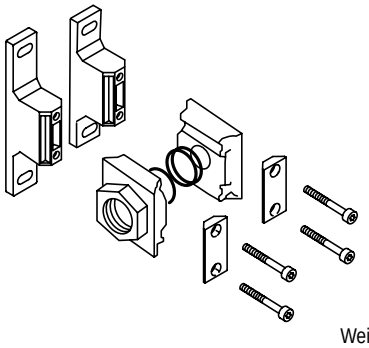

Weight: 270g
Material: Aluminum alloy die-casting
Painting

● D401-00-8/10/15-W-(B31W)
Distributor

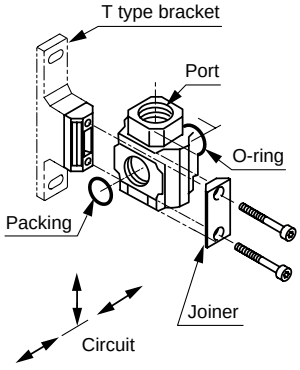

Weight: 161g
216 g(B31W)
Material: Aluminum alloy die-casting
Painting

● A401-8/10/15-W-(B31W)
L type pipe adaptor

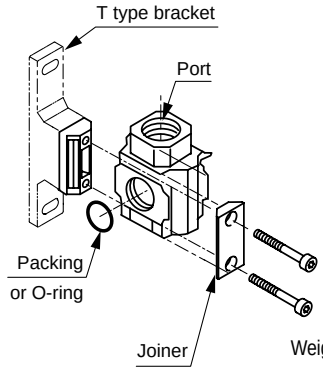

Weight: 161g
216 g(B31W)
Material: Aluminum alloy die-casting
Painting

Setting method based on switch operation

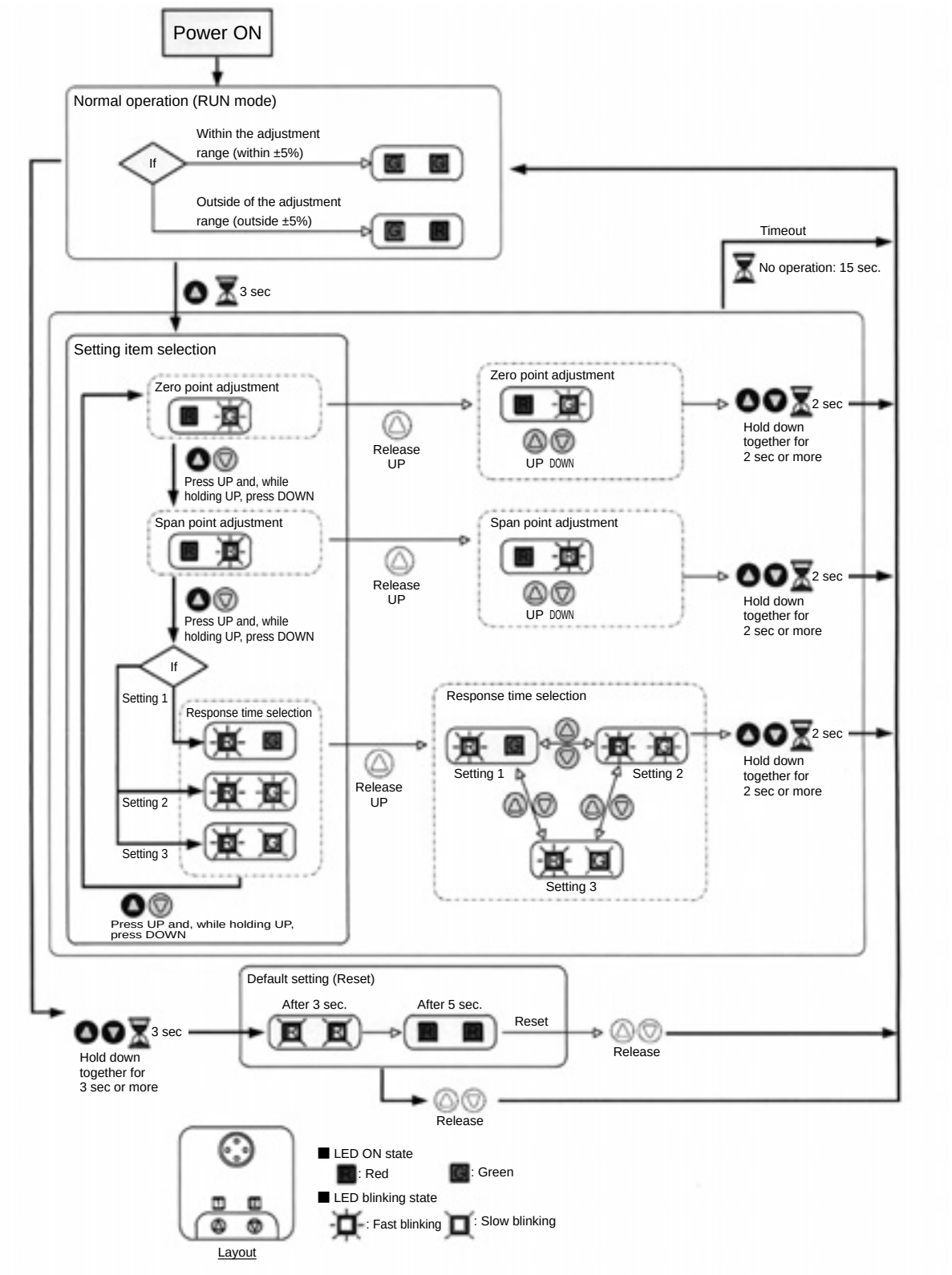

[Zero point and span point adjustment range]

* The adjustment range is not guaranteed. Regard it as a guideline.
* During adjustment, apply an input signal of 1% F.S. or more.

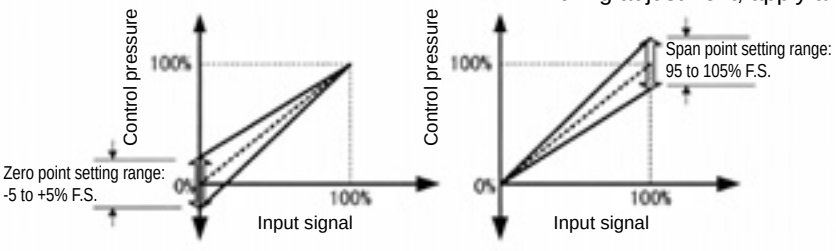

MEMO



Compact electro pneumatic regulator (solenoid valve)

EVS2 Series

JIS symbol

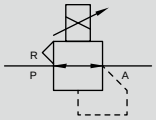

Overview

Compact, lightweight and high performance electro pneumatic regulator.
Ideal for controlling pilot regulators, pressure and fine speed cylinders in the semiconductor and precision assembling fields.

Features

(1) Compact/lightweight
20% smaller and 35% lighter than the conventional model. Downsize and lighten your equipment with this model.
(2) Longer service life
Three times that of our previous model.
(3) High precision/high responsiveness
High precision and high-speed response control of fluid pressure using electric signals. Provides 0.3% F.S. repeatability, 0.1% F.S. resolution, 0.1 sec. response time (without load).
(4) 2-color display of the operational status
On the 2-color operation indicator, green means the pressure is within the set value and red means the pressure is outside the set value or an error status.
(5) Easy to pipe/wire
Push-in cartridge fitting and M12 connector have improved work efficiency.

Specifications

1 MPa = 10 bar

Item			EVS2-100	EVS2-500
Working fluid			Clean compressed air (JIS B 83921-1: 2012 (ISO 8573-1: 2010) [1:3:2] or equivalent)	
Max. working pressure			200 kPa (≈29 psi, 2 bar)	0.7 MPa (≈100 psi, 7 bar)
Min. working pressure			Set pressure + max. control pressure x 0.1	
Proof pressure		Inlet	300 kPa (≈44 psi, 3 bar)	1.05 MPa (≈150 psi, 10.5 bar)
		Output side	150 kPa (≈22 psi, 1.5 bar)	0.75 MPa (≈110 psi, 7.5 bar)
Pressure control range (*1)			1 (≈0.2 psi) to 100 kPa (≈15 psi)	0.005 (≈0.73 psi) to 0.5 MPa (≈73 psi)
Power supply voltage			24 VDC ± 10% (stabilized power supply with ripple rate of 1% or less)	
Current consumption			0.1 A or less (0.6 A rush current when power is ON)	
Input signal (input impedance)		0	0 to 10 VDC(6.7 kΩ)	
		1	0 to 5 VDC(10 kΩ)	
		2	4 to 20 mADC(250 Ω)	
		3	0 to 20 mADC(250 Ω)	
Analog output (connecting load impedance)		AV	1 to 5 VDC (50 kΩ)	
		AA	4-20 mADC (300 Ω or less)	
Accuracy (*2)	Hysteresis		0.4% F.S. or less	
	Linearity		±0.5% F.S. or less	
	Resolution		0.1% F.S. or less	
	Repeatability		0.3% F.S. or less	
Temperature characteristics	Zero point fluctuation		±0.12% F.S./°C or less	
	Span fluctuation		±0.07% F.S./°C or less	
Max. flow rate (*3)			2 ℓ/min(ANR)	8 ℓ/min(ANR)
Step response (*4)	No load		0.1 s or less	
	15 cm^3 Load		0.5 s or less	
Operating ambient temperature, fluid temperature			0 (32°F) to 50 (122°F)°C	
Storage ambient temperature			-20 (-4°F) to 60 (140°F)°C	
Operating ambient humidity			45 to 90% RH (no condensation)	
Storage ambient humidity			96% RH or less	
Mounting orientation			Free	
Boundary dimension			W30×D50×H39	
Port size		H4	ø4 Push-in fitting	
		H6	ø6 Push-in fitting	
Weight			90 g	

*1: 1% F.S. or less input signal cannot be controlled.
*2: The characteristics are: 24.0±0.1 VDC power supply voltage, 25±3°C ambient temperature, within the working pressure. and 10% to 100% of set pressure range.
*3: Working pressure: Maximum working pressure, Control pressure: Maximum control pressure.
*4: Working pressure: Max. working pressure, step amount:
50% F.S. → 100% F.S.
50% F.S. → 60% F.S.
50% F.S. → 40% F.S.
*5: The specification values above are obtained in a static state only. The control pressure may differ if air is consumed on the output side.

Example of applications

● Chemical liquid discharge control

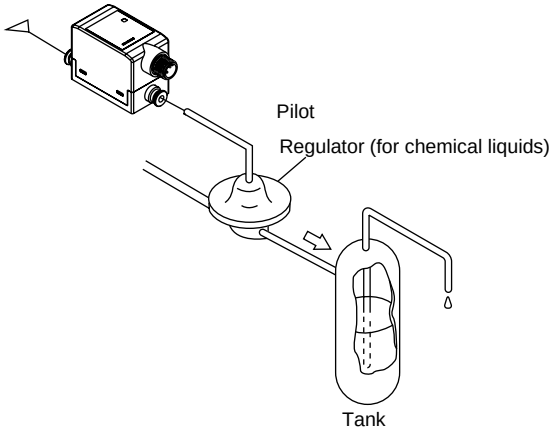

● Micro position control

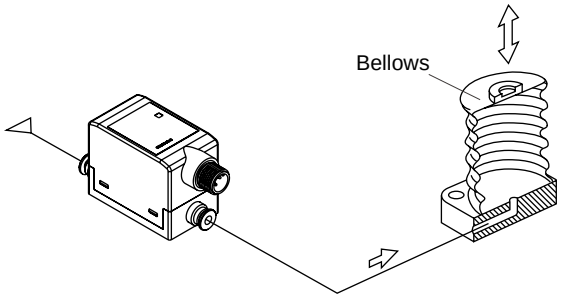

How to order

EVS2 - 100 - 1 H4 AV - C11 - 3

- EVS2: Model No.
- 100: Ⓐ Pressure control range
- 1: Ⓑ Input signal
- H4: Ⓒ Port size
- AV: Ⓓ Analog output
- C11: Ⓔ Cable option
- 3

Code	Description
Ⓐ Pressure control range	
100	1 to 100 kPa
500	0.005 to 0.5 MPa
Ⓑ Input signal	
0	0 to 10 VDC
1	0 to 5 VDC
2	4 to 20 mADC
3	0 to 20 mADC
Ⓒ Port size	
H4	Push-in fitting ø4
H6	Push-in fitting ø6
Ⓓ Analog output	
AV	1 to 5 V
AA	4 to 20 mA
Ⓔ Cable option	
Blank	None
C11	1 m (straight connector)
C13	3 m (straight connector)

Precautions for model No. selection

Note: How to order an option only:

EV2000 - Cable option code

Dimensions

CAD

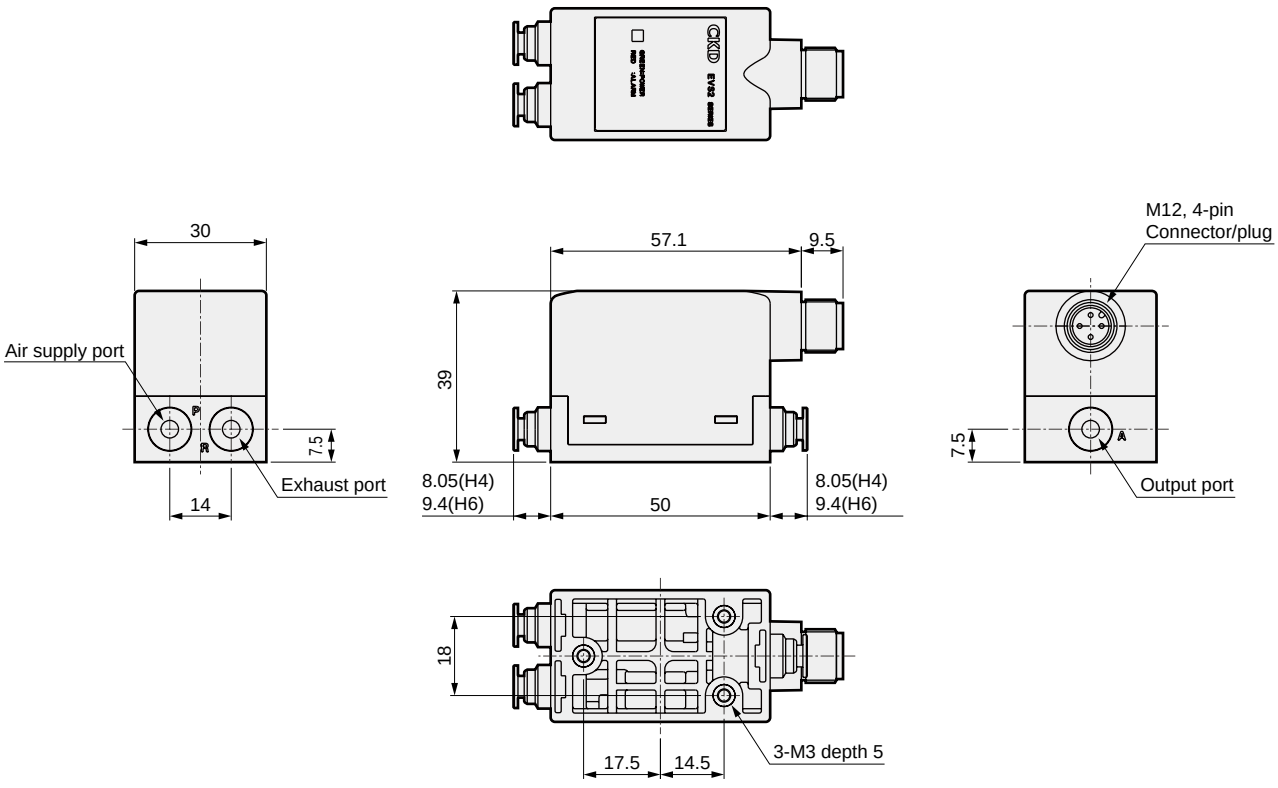

Analog output

● When selecting voltage output (AV)

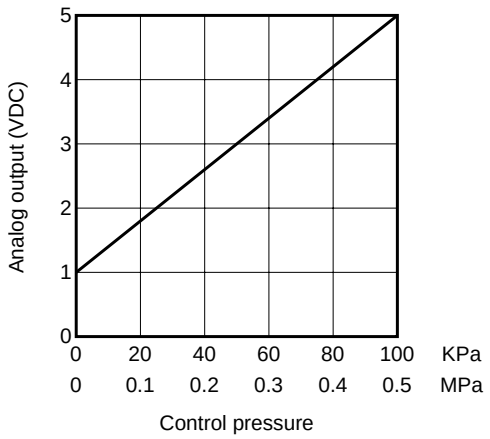

● When selecting current output (AA)

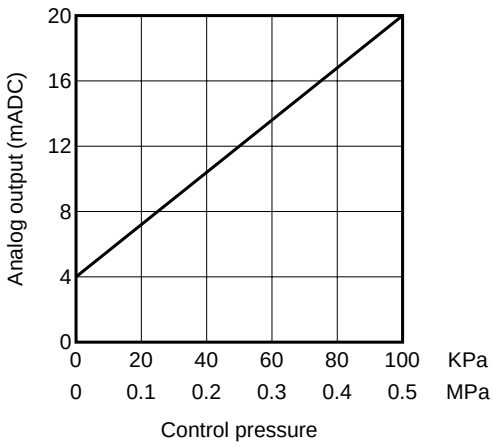

I/O characteristics

● EVS2-100

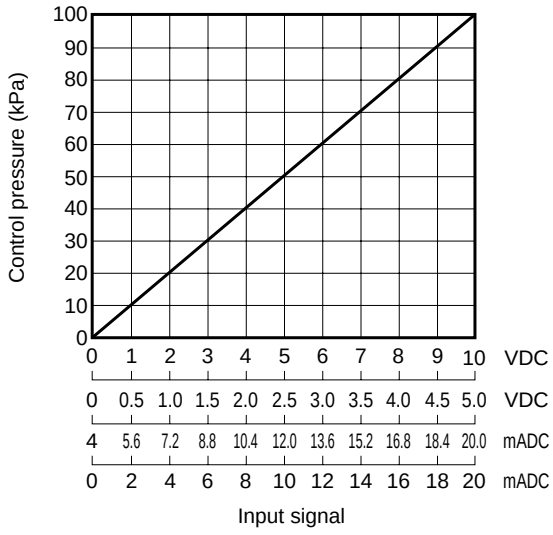

● EVS2-500

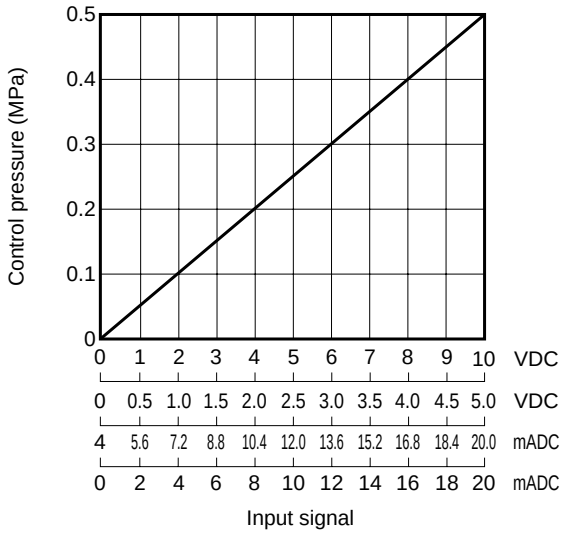

Cable option

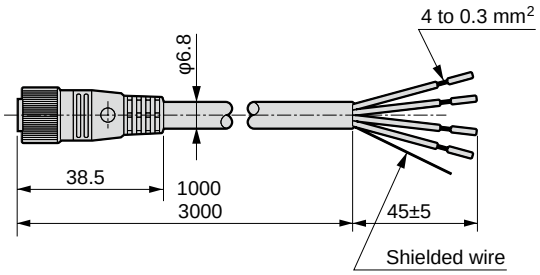

-C1* Shielded cable connector

* Pin No.	Insulator color	Applications	Type of input signal				Weight
			0 to 10 V	0 to 5 V	4 to 20 mA	0 to 20 mA	
1	Red	Power supply ⊕	24 V				C11:79 C13:212
2	Green	-	Analog output				
3	Black	Common	0 V				
4	White	Input signal	0 to 10 V	0 to 5 V	4 to 20 mA	0 to 20 mA	

If a cable option is not used, the following recommended cable sockets can be used. Use a shielded wire cable.

Screw fixing type	ELW1KA4012 Correns (Hirschmann)
Straight (solder)	XS2C-D421 OMRON
L type (solder)	XS2C-D422 OMRON

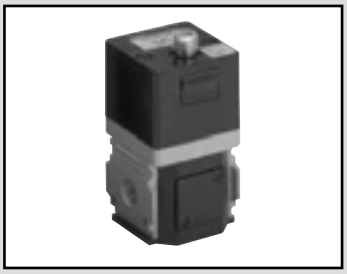

Electro pneumatic regulator (solenoid valve vacuum)

EV2100V Series

JIS symbol

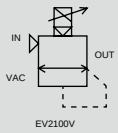

RoHS CAD

Overview

For electro pneumatic regulator EV2100V Series, feedback control with semiconductor pressure sensor and electronic control circuit is used to enable continuous and precise vacuum pressure control with electric signals.

Features

- Compact and lightweight
- Module can be connected
- Non-bleed
- High relief
- High precision/high-speed response
- Manifold available
- Various input signals
- Easy wiring
- Pressure monitor available
- Degree of protection: IP64 or equivalent

Specifications

1 MPa = 10 bar

Item		EV2100V	EV2109V
Working fluid		Air (according to the recommended air circuit on page 667)	
Working pressure range		-96 kPa (≈-14 psi, -0.96 bar) to -101.3 kPa (≈-15 psi, -1.013 bar)	
Proof pressure	Inlet	196 kPa (≈28 psi, 1.96 bar)	
	Output side	196 kPa (≈28 psi, 1.96 bar)	
Guaranteed pressure accuracy range *5		-10.1 (≈-1.5 psi) to -91.2 kPa (≈-13 psi) (10 to 90% F.S)	
Power supply voltage		24 VDC ± 10% (stabilized power supply with ripple rate 1% or less)	
Current consumption		0.1 A or less (0.6 A rush current when power is ON)	
Input signal (input impedance)		0 to 10 VDC (20 kΩ) / 0 to 5 VDC (10 kΩ) / 4 to 20 mA DC or 1 to 5 VDC (250 Ω) *1 / 10 kΩ variable resistance or 0 to 10 VDC (20 kΩ)	
Analog output		1 to 5 VDC (none for 10 kΩ variable resistance input)	
Hysteresis		1% F.S. or less *2	
Linearity		±0.5% F.S. *2	
Resolution		0.5% F.S. or less *2	
Repeatability		0.5% F.S. or less *2	
Temperature characteristics	Zero point fluctuation	±0.15% F.S./°C or less	
	Span fluctuation	±0.07% F.S./°C or less	
Max. flow rate (ANR)		150 ℓ/min	120 ℓ/min
Step response *3	No load	0.6 sec or less	
	1ℓ Load	2.0 sec or less	
Vibration resistance		98 m/s^2 or less (JIS C60068-2-6)	
Ambient temperature		5 (41°F) to 50 (122°F)°C	
Degree of protection		IP64 or equivalent (body), IP67 (cable connector) *4	
Port size		Rc1/4	
Weight		300 g	320 g

*1: When used with a signal voltage of 1 to 5 VDC, 4 to 20 mA of current flows into the EV interior from the signal source. Confirm specifications of the signal source before use.

*2: The characteristics above are: -96.0 to -101.3 kPa working pressure, 24 ± 0.1 VDC power supply voltage, 25 ± 3°C ambient temperature, no load, and 10 to 90% control pressure. In addition, the secondary side must be a closed circuit. Vacuum pressure may become lower or fluctuate if the secondary side is open to the atmosphere.

*3: Working pressure: -100 kPa, step rate: 50% F.S. → 90% F.S. / 50% F.S. → 60% F.S. / 50% F.S. → 40% F.S.

*4: The degree of protection of body IP64 is applied only when installed with facing connector upward.
The above characteristics are those within the working pressure range. If used outside the working pressure range, please contact CKD.

*5: There is 0 to 5 kPa residual pressure when the input signal is 0%.
Refer to the input/output characteristics graph (page 628).

How to order

EV210 (A)0 V - (B)1 (C)08 - (D)C11

- (A) Body shape
- (B) Input signal
- (C) Port size
- (D) Option *1 *3

Code	Description
(A) Body shape	
0	Single unit
9	Discrete manifold
(B) Input signal	
0	0 to 10 VDC
1	0 to 5 VDC
2	4 to 20 mA or 1 to 5 VDC
3	10 kΩ variable resistance or 0 to 10 VDC (connected to 10 VDC built-in power supply)
(C) Port size	
08	Rc1/4
(D) Option	
Cable option	
Blank	None
C11	1 m attached
C13	3 m attached
Intake option	
Blank	Intake block 1
K1	Intake block 2
Bracket option	
Blank	None
B4	B type bracket
T	T type bracket

Precautions for model selection

*1: How to order an option only:
EV2000- Option code

*2: However, the combination of optional "intake block 1" and " T type bracket" is not available.

*3: The bracket option B4 cannot be used when using the EV2109V (manifold).

Clean-room specifications (Catalog No. CB-033SA)

- Anti-dust generation structure for use in cleanrooms

EV2100V – ..... – P70

EV2109V – ..... – P70

Internal structure and parts list

● EV2100V

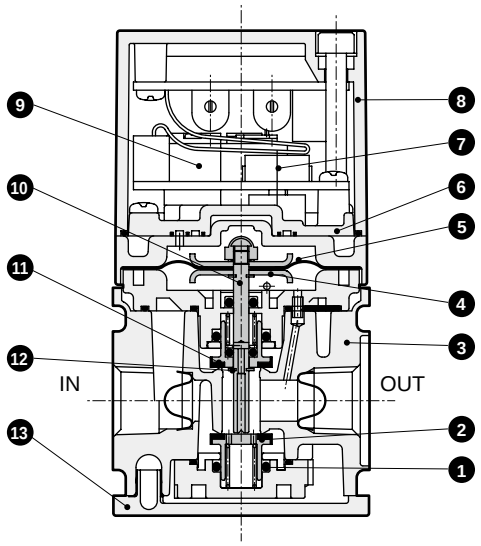

● EV2109V

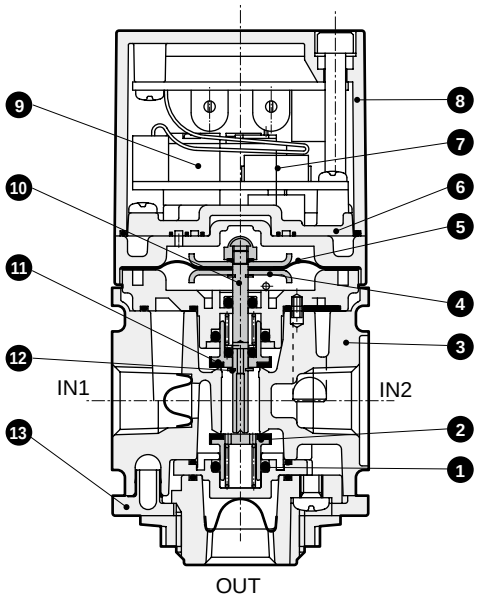

Cannot be disassembled

No.	Part name	Material	No.	Part name	Material
1	O-ring	Fluoro rubber	8	Housing	ABS resin
2	Bottom valve	Copper alloy, special nitrile rubber	9	3-way valve	
3	Body	Aluminum alloy die-casting	10	Rod	Stainless steel
4	Disc	Aluminum alloy	11	Top valve	Copper alloy, special nitrile rubber
5	Diaphragm	Special nitrile rubber	12	E-type snap ring	Steel
6	Valve base	Polyphenylene sulfide resin	13	Plate cover	ABS resin
7	Pressure sensor	Diffused semiconductor			

Dimensions

● EV2100V

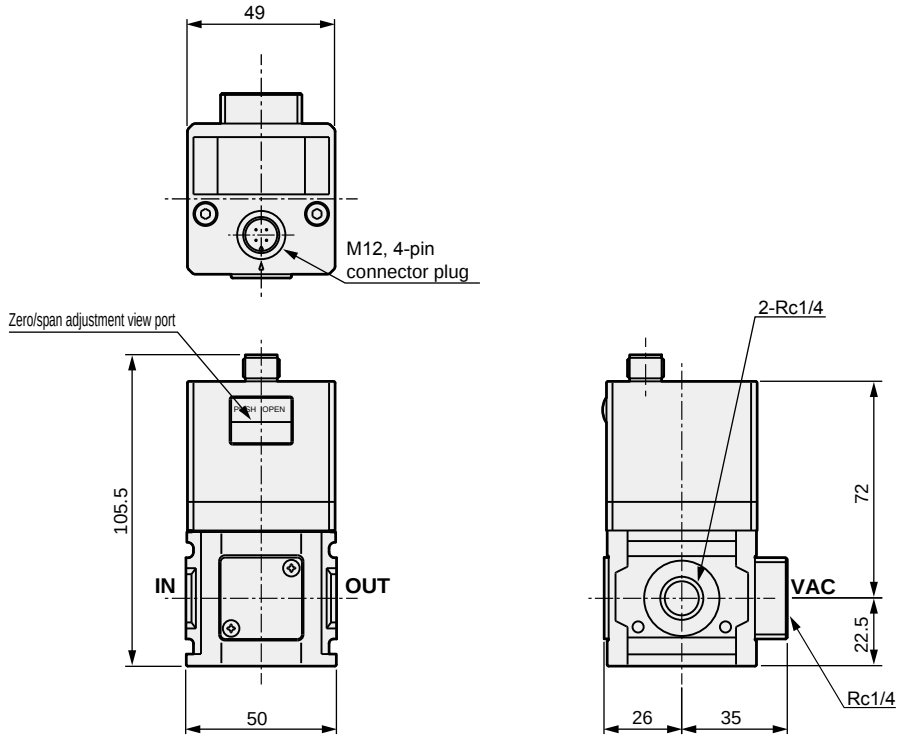

● EV2109V

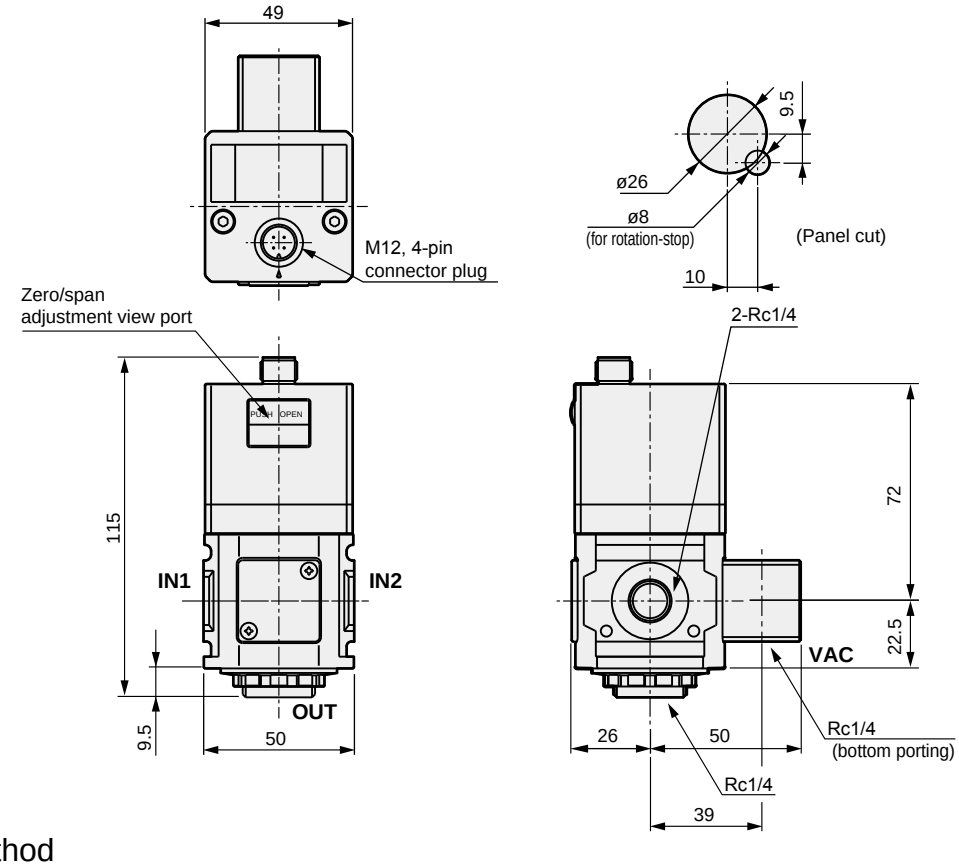

Piping method

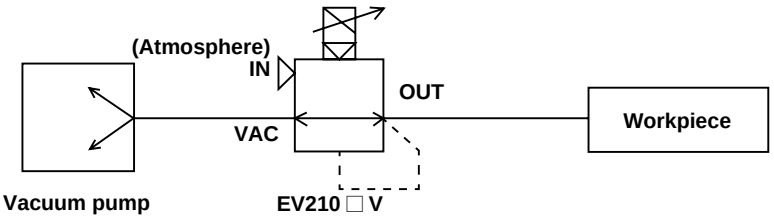

* Refer to the precautions for [Recommended circuit] on page 667 for details.

I/O characteristics

● Input signal 0 to 10 VDC

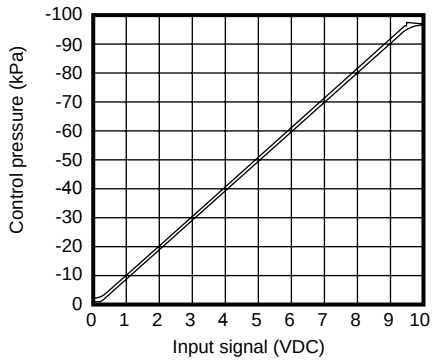

● Input signal 0 to 5 VDC

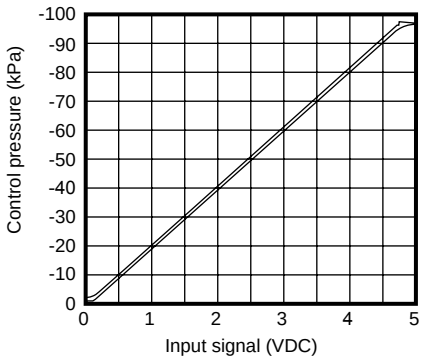

● Input signal 4 to 20 mADC or 1 to 5 VDC

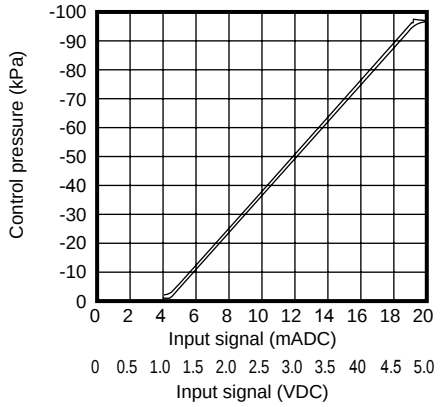

● Input signal 10 kΩ variable resistance or 0 to 10 VDC

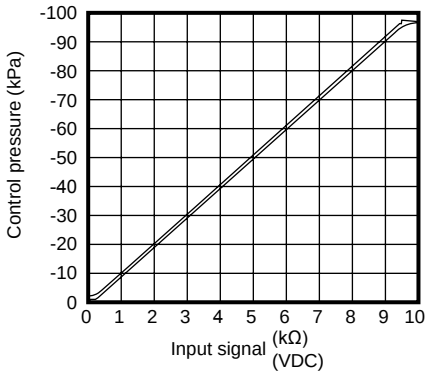

Flow characteristics

● EV2100V

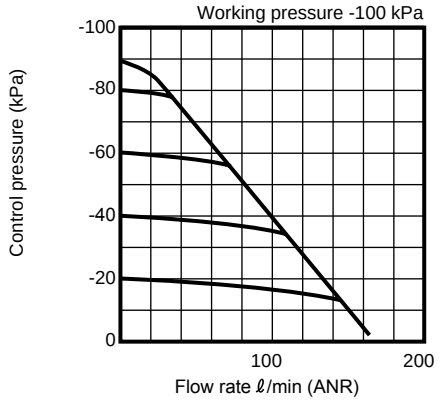

● EV2109V

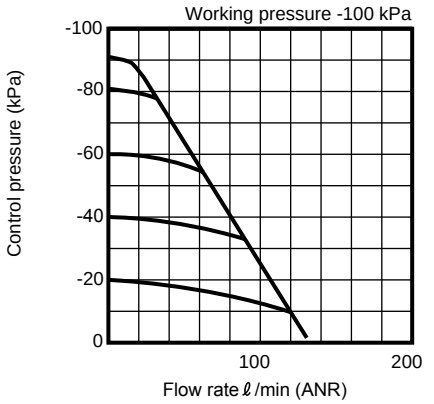

Analog output

● EV2100V,EV2109V

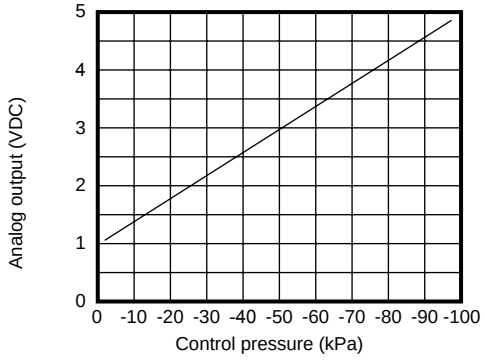

Optional models

Embedded type intake option

● Standard (blank)

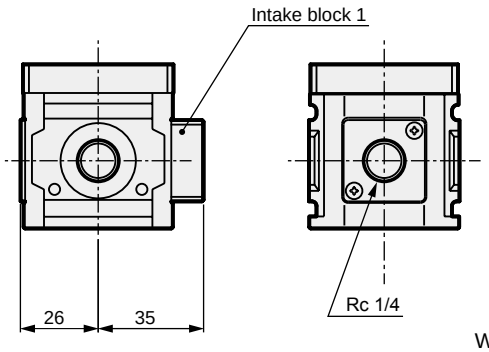

Weight: 24g

● -K1

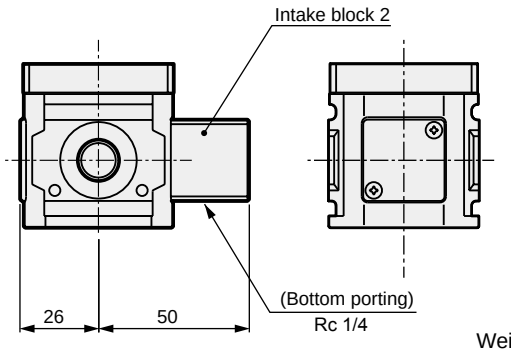

Weight: 50g

Bracket option

● Floor mounted: **-B4 (B type bracket)

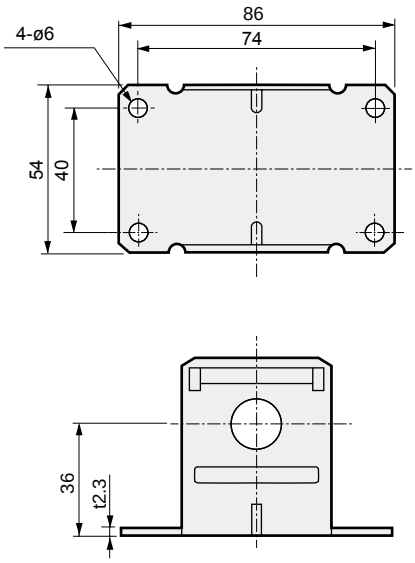

Material: SPCC
Treatment: Black painted
Weight: 165g

● Wall mounted: **-T (T type bracket)

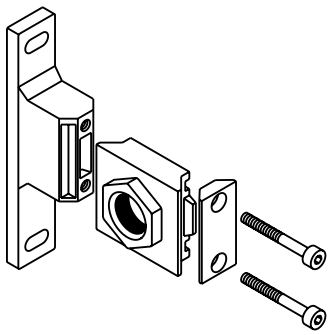

* An O-ring and a gasket are included.

Note: Refer to page 346 for dimensions of T type bracket.

Weight: 135g

Cable option

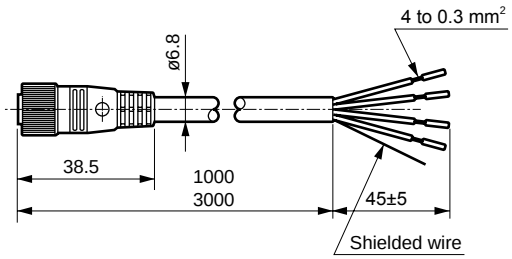

-C1* Shield/cable/connector

*Pin No.	Insulator color	Applications	Type of input signal				Weight g
			0 to 10 V	0 to 5 V	4 to 20 mA 1 to 5 V	10 kΩVR (0 to 10 V)	
1	Red	Power supply ⊕	24 V				C11: 79 C13:212
2	Green	——	Analog output 1 to 5 V			VR input terminal	
3	Black	Common	0 V			VR input terminal 0 V	
4	White	Input signal	0 to 10 V	0 to 5 V	4 to 20 mA 1 to 5 V	VR output terminal (0 to 10 V)	

If a cable connector is not used, the following recommended cable sockets can be used. Use a shielded wire cable.

Screw fixing type	ELW1KA4012 Correns (Hirschmann)
Straight (solder)	XS2C-D421 OMRON
L type (solder)	XS2C-D422 OMRON



Low pressure electro pneumatic regulator

EVL Series

JIS symbol

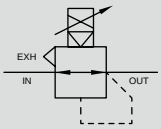

Overview

This low-pressure electro pneumatic regulator EVL Series is the first compact electro-pneumatic regulator for low pressure that enables flexible and highly precise proportional control from 0 kPa to 50 kPa.

Features

- Low pressure
  Low pressure control from 0 to 50 kPa.
- High precision control
  Hysteresis 0.5% F.S. or less
  Resolution 0.2% F.S. or less
- Easy wiring
- Grease free flow path

Specifications

Item		EVL-1050			
Working fluid		Clean compressed air (JIS B 8392-1: 2012 (ISO 8573-1: 2010) [1:3:2] or equivalent)			
Max. working pressure		160 kPa (≈23 psi, 1.6 bar)			
Min. working pressure		140 kPa (≈20 psi, 1.4 bar)			
Proof pressure	Inlet	240 kPa (≈35 psi, 2.4 bar)			
	Pressure side	100 kPa (≈15 psi, 1 bar)			
Pressure control range		0 (≈0 psi, 0 bar) to 50 kPa (≈7.2 psi, 0.5 bar)			
Power supply voltage		24 VDC ± 10% (stabilized power supply with ripple rate 1% or less)			
Current consumption		0.1 A or less (0.6 A rush current when power is ON)			
Input signal (input impedance)		0 to 10 VDC (20 kΩ)	0 to 5 VDC (10 kΩ)	4 to 20 mADC or 1 to 5 VDC (250 Ω) *4	10 kΩ variable resistance or 0 to 10 VDC (20 kΩ)
Analog output		1±0.1 to 5±0.1 VDC (none for 10 kΩ variable resistance input)			
Accuracy *1	Hysteresis	0.5% F.S. or less			
	Linearity	±0.5% F.S. or less			
	Resolution	0.2% F.S. or less			
	Repeatability	0.5% F.S. or less			
Temperature characteristics	Zero point fluctuation	±0.15% F.S./°C or less			
	Span fluctuation	±0.07% F.S./°C or less			
Max. flow rate *2		100 ℓ/min(ANR)			
Step response *3		0.6 s or less (no load)			
Vibration resistance		98 m/s^2 or less (JIS C0040)			
Air consumption		4 ℓ/min(ANR)			
Ambient temperature		5 (41°F) to 50 (122°F)°C			
Mounting orientation		Free			
Degree of protection		IP64 or equivalent (body), IP67 (cable connector) *5			
Port size	IN/OUT port	Rc1/4			
	EXH port	ø4.3 *6			
	Pilot exhaust port (R) Bleed port	M3			
Weight		315 g			

*1: The characteristics above are: 24.0 ±0.1 VDC power supply voltage, no load, 25 ±3°C ambient temperature, within the primary side working pressure, and 10% to 100% control pressure. In addition, when the secondary side is a closed circuit, pressure fluctuations will occur if the product is used for blowing or for similar applications.
*2: Values at 160 kPa working pressure and 50 kPa control pressure.
*3: Working pressure: 160kPa, step amount: 50% F.S. → 100% F.S.
50% F.S. → 60% F.S.
50% F.S. → 40% F.S.
*4: When used with a signal voltage of 1 to 5 VDC, 4 to 20 mA of current flows into the EV interior from the signal source. Check the specifications of the signal source before using it.
*5: The degree of protection of body IP64 is applied only when installed with facing connector upward.
*6: EXH port is open to the atmosphere. If piping is necessary, select "-E1" exhaust option.

How to order

EVL - 1050 - 0 08 - C11 E1 L11

Ⓐ Input signal

Ⓑ Option

Code	Description
Ⓐ Input signal	
0	0 to 10 V
1	0 to 5 V
2	4 to 20 mA or 1 to 5 VDC
3	10 kΩ variable resistance or 0 to 10 V
Ⓑ Option	
Cable option	
Blank	None
C11	1 m attached
C13	3 m attached
Exhaust option	
Blank	None
E1 *1	ø8 push-in fitting
Brakect option included	
Blank	None
B1 *1	Floor mounted
B11	Floor mounted for exhaust fitting
L11	Wall mounted

⚠ Precautions for model No. selection

*1: "E1" exhaust option and "B1" floor mounted cannot be selected together.

● Discrete option model No.

(1) Cable/exhaust option

EV2000 - C11

Code	Description
C11	Cable 1 m
C13	Cable 3 m
E1	ø8 push-in fitting

(2) Bracket option

EVD - B1

Code	Description
B1	Floor mounted

EVL - B11

Code	Description
B11	Floor mounted for exhaust fitting
L11	Wall mounted

Internal structure and parts list

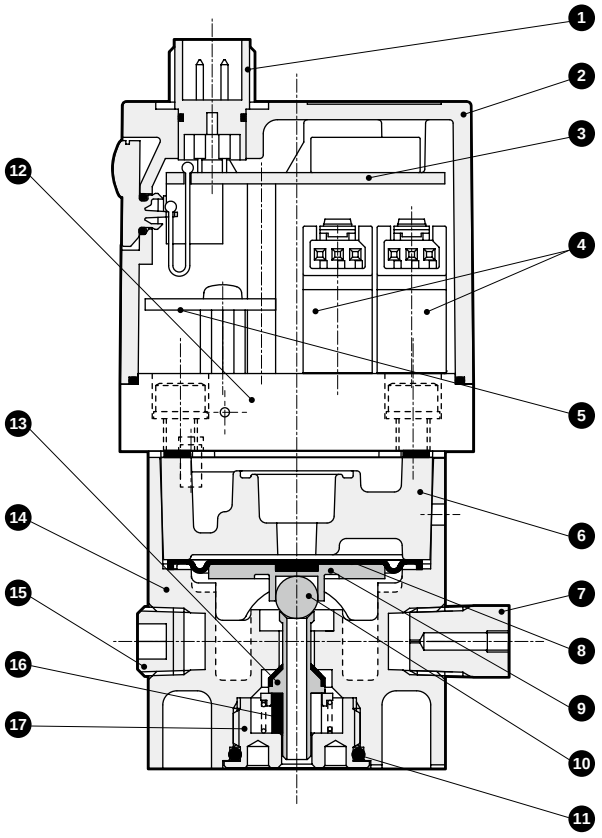

No.	Part name	Material
1	Connector plug	
2	Housing	ABS resin
3	Controller board	
4	3-way valve	
5	Pressure sensor	
6	Pilot body	Aluminum alloy
7	Orifice	Stainless steel
8	Diaphragm	Special nitrile rubber
9	Relief seat	Aluminum alloy
10	Steel ball (exhaust valve)	Stainless steel
11	O-ring	Fluoro rubber
12	Valve base	Aluminum alloy
13	Valve (air supply valve)	Special nitrile rubber, stainless steel
14	Body	Aluminum alloy
15	Plug	Steel, nickeling
16	Bottom rubber	Silicone rubber
17	Bottom plug	Copper alloy, electroless nickeling

Cannot be disassembled

Dimensions

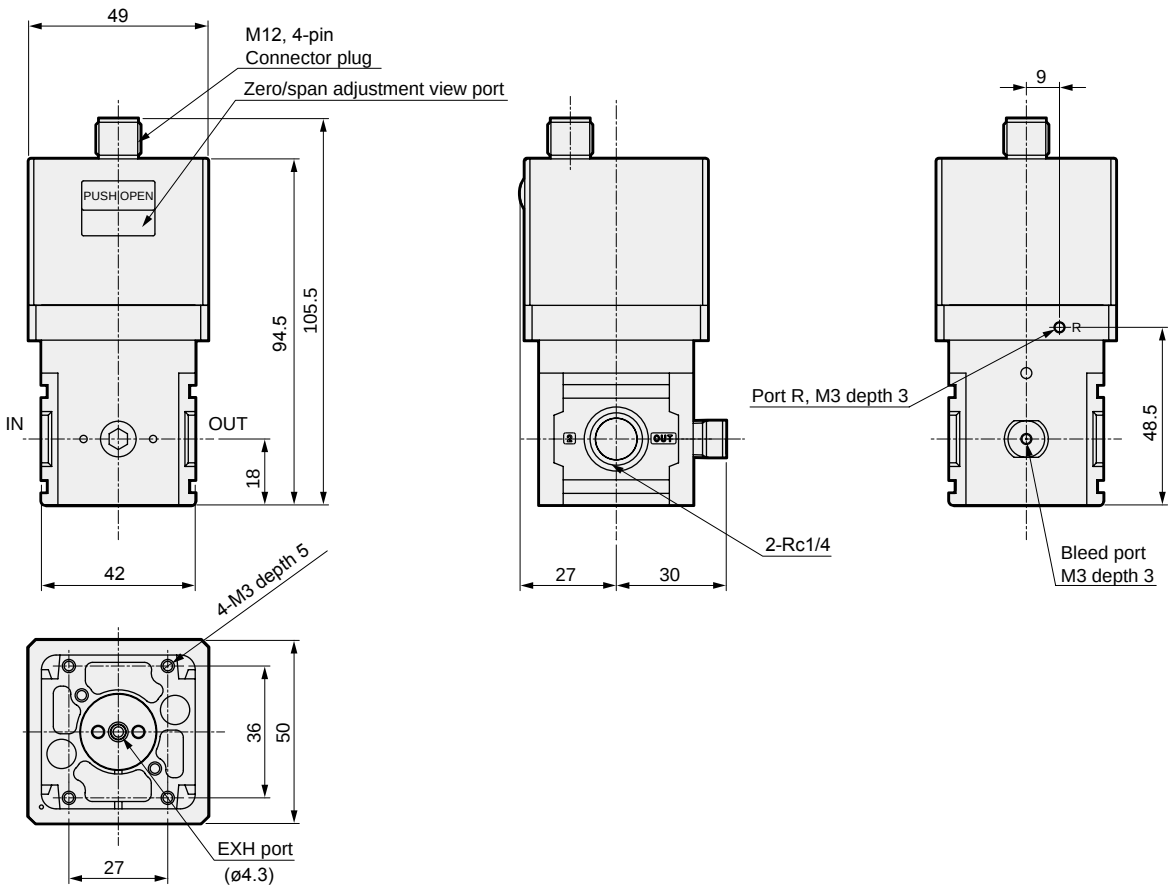

Dimensions with options

● Floor mounted bracket (-B1)

· Lateral mounting (in the piping direction)

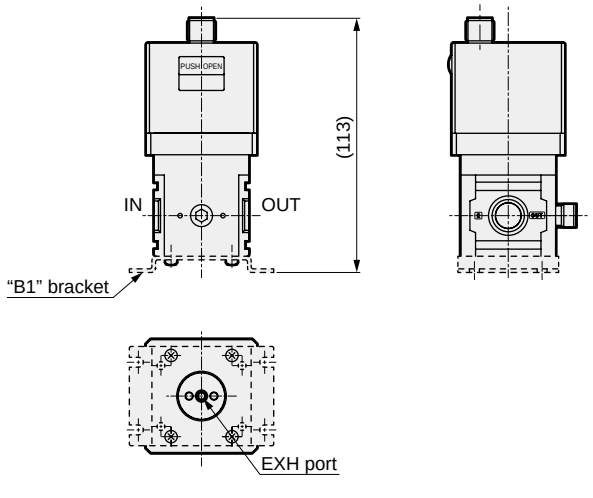

· Longitudinal mounting (in the depth direction)

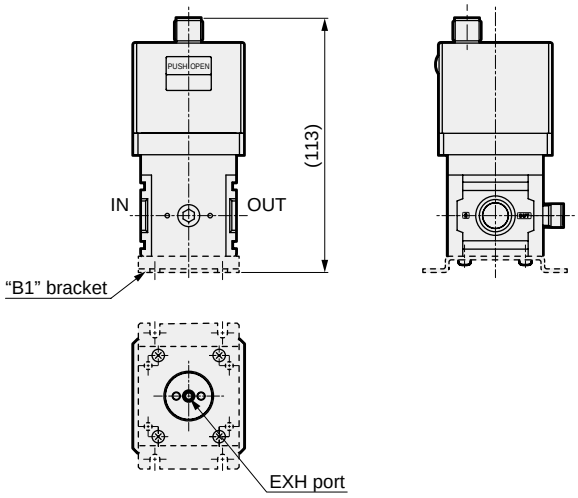

● Floor mounted bracket for exhaust fitting (-B11)

· Lateral mounting (in the piping direction)

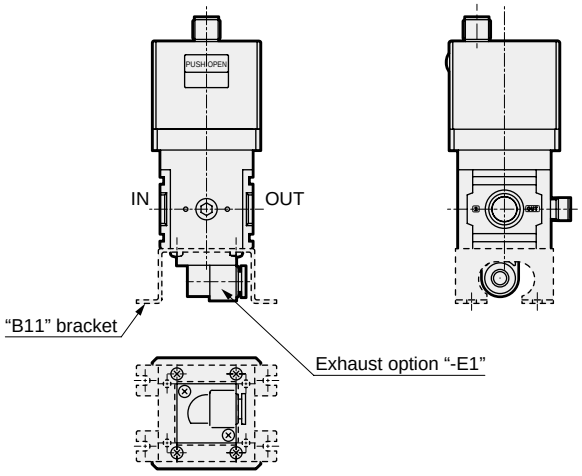

· Longitudinal mounting (in the depth direction)

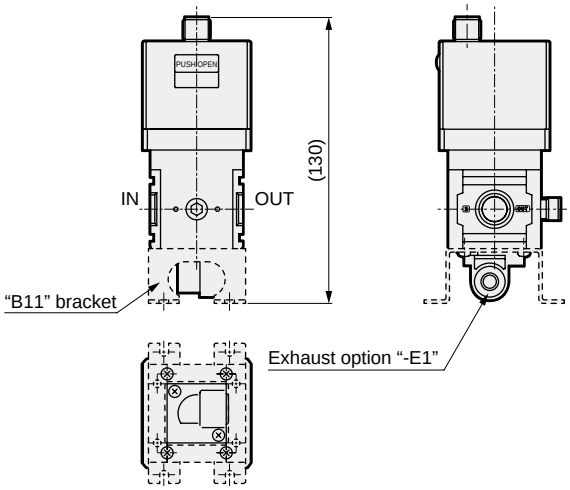

Note: Pull out the exhaust tube from the through hole when mounting the bracket laterally.

● Wall mounted bracket (-L11)

· With the body facing the front

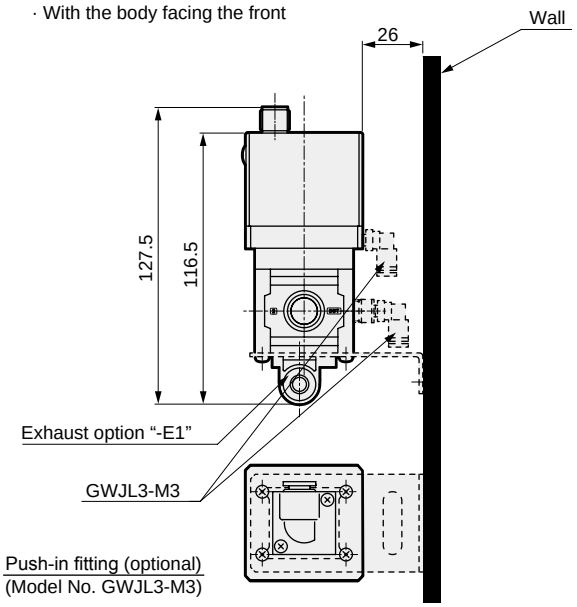

· With the body facing the side

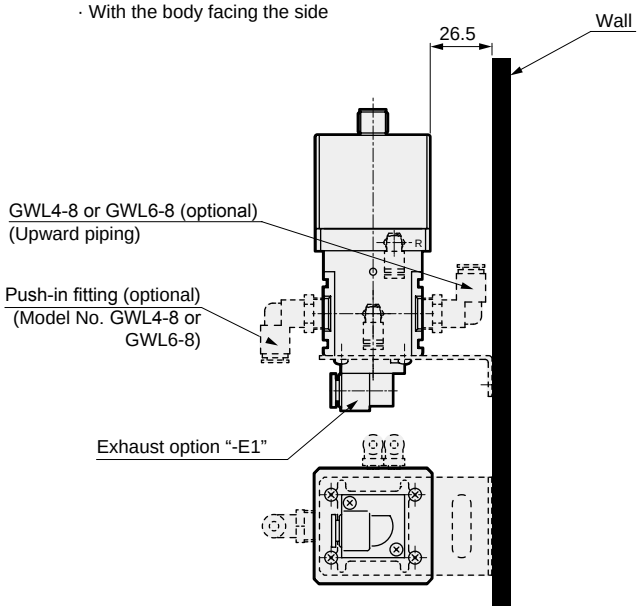

Optional dimensions

● Bracket option (-B1, -B11, -L11)

· Floor mounted bracket (-B1)

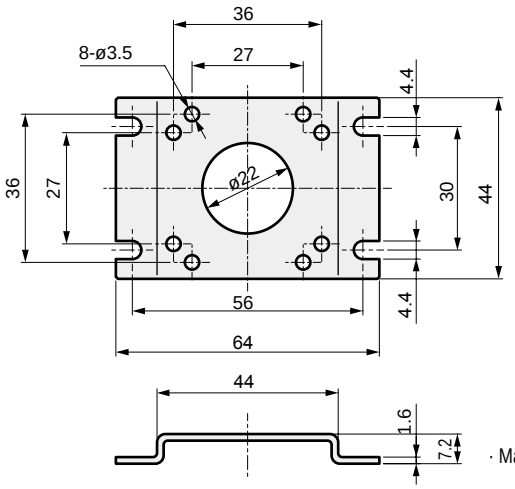

· Material: SPCC
Ni plated
· Weight: 32 g

· Floor mounted for exhaust fitting (-B11)

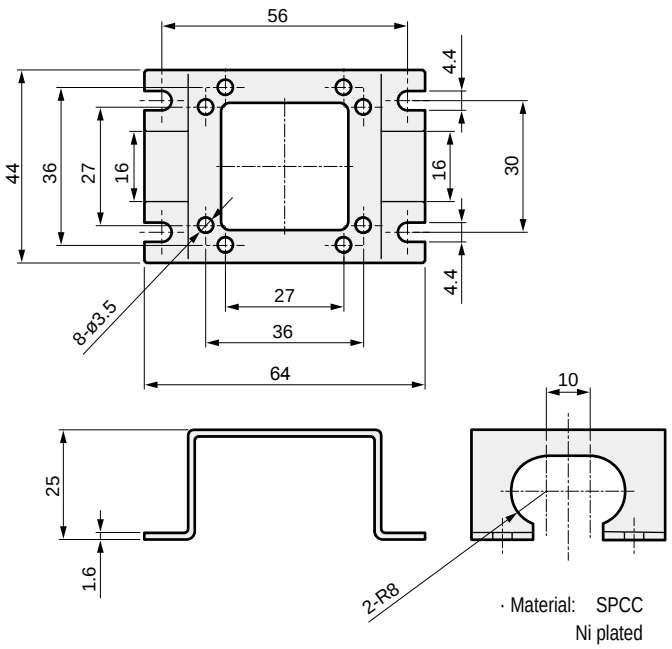

· Material: SPCC
Ni plated
· Weight: 32 g

·Wall mounted (-L11)

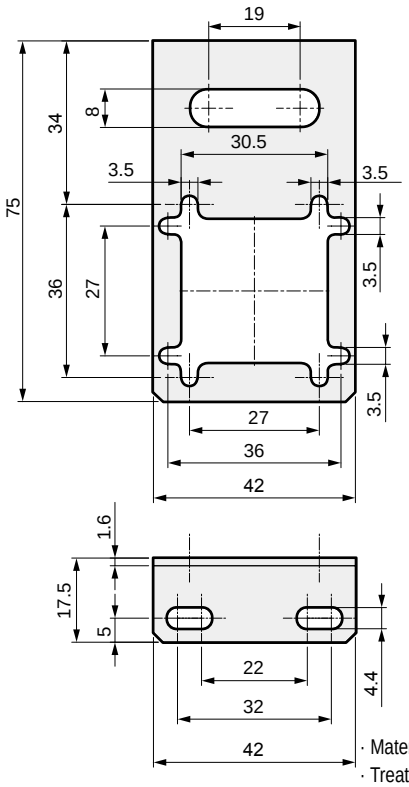

· Material: SPCC
· Treatment: Ni plating
· Weight: 31 g

● With ø8 push-in fitting (-E1)

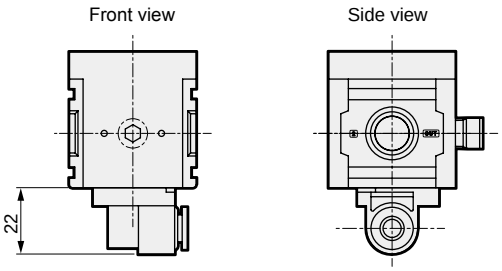

· Weight:13 g

● Cable option

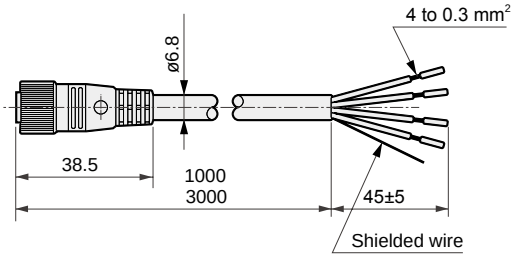

-C1* Shield/cable/connector

* Pin NO.	Insulator color	Applications	Type of input signal				Weight g
			0 to 10 V	0 to 5 V	4 to 20 mA 1 to 5 V	10 kΩVR (0 to 10 V)	
1	Red	Power supply ⊕	24 V				C11:79 C13:212
2	Green	——	Analog output 1 to 5 V			VR input terminal	
3	Black	Common	0 V			VR input terminal 0 V	
4	White	Input signal	0 to 10 V	0 to 5 V	4 to 20 mA 1 to 5 V	VR output terminal (0 to 10 V)	

If a cable connector is not used, the following recommended cable sockets can be used. Use a shielded wire cable.

Screw fixing type	ELW1KA4012 Correns (Hirschmann)
Straight (solder)	XS2C-D421 OMRON
L type (solder)	XS2C-D422 OMRON

I/O characteristics

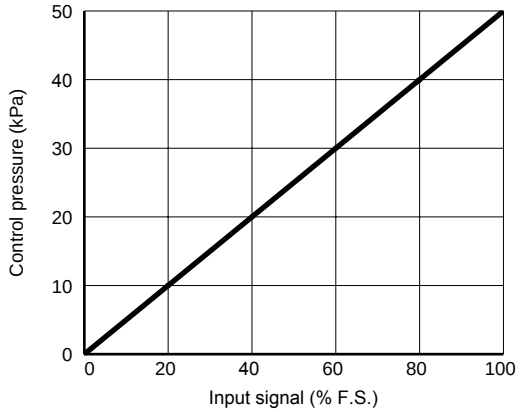

Analog output

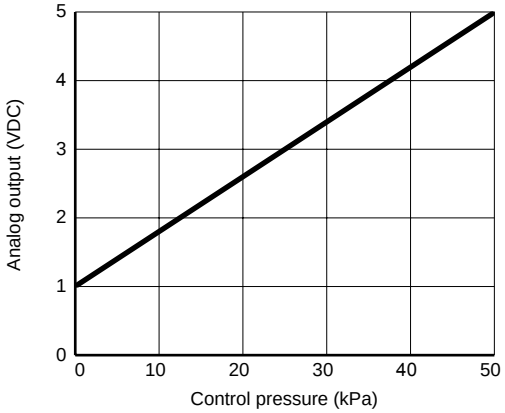

Flow characteristics

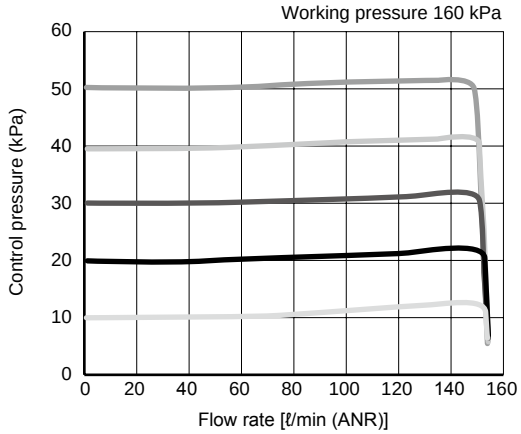

Relief characteristics

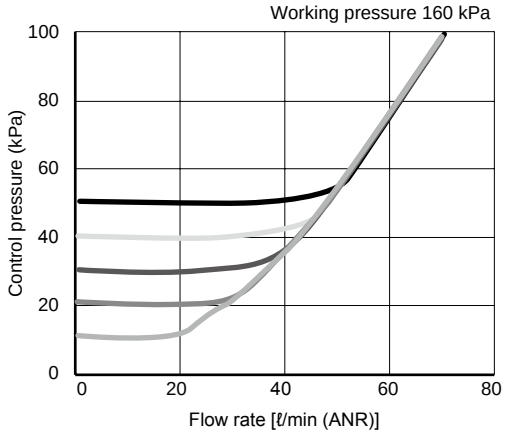

Safety precautions

⚠CAUTION

- This product uses the constant bleed method. Do not plug the bleed port during use.
- If common exhaust is necessary, select “-E1” exhaust option. In addition to the EXH port, discharge from the bleed port and pilot exhaust port (R) together.
  Note that “-B1” bracket cannot be selected in this case.
- Keep the supply pressure between 140 kPa and 160 kPa to ensure high accuracy.
- Applying an input signal outside the specifications shown in the table below will cause unnecessary operation of the solenoid valve, resulting in shorter service life and deteriorated performance. Keep the signal within the specifications.

0 to 10V	0 to 5 V	4 to 20 mA
Less than 0 V Exceeding 10 V	Less than 0 V Exceeding 5 V	Less than 4 mA Exceeding 20 mA

- When mounting the unit on the wall (with the body facing the front) and attaching fittings to the bleed port and pilot exhaust port, use GWJL3-M3.
- When mounting the unit on the wall (with the body facing the side), use GWL4-8 or GWL6-8 fitting on the wall side. Also, piping should be in an upward direction.
- If particles must be eliminated, install a filter (e.g., FCS1000 Series) on the secondary side of EVL.

Much-awaited series in the fields of ultra precision and micro systems

Thin electro pneumatic regulator manifold
for PC control can reduce wiring.
Ideal for pressure control and fine speed cylinder control, etc.,
in semiconductor fields and precise processing fields, etc.

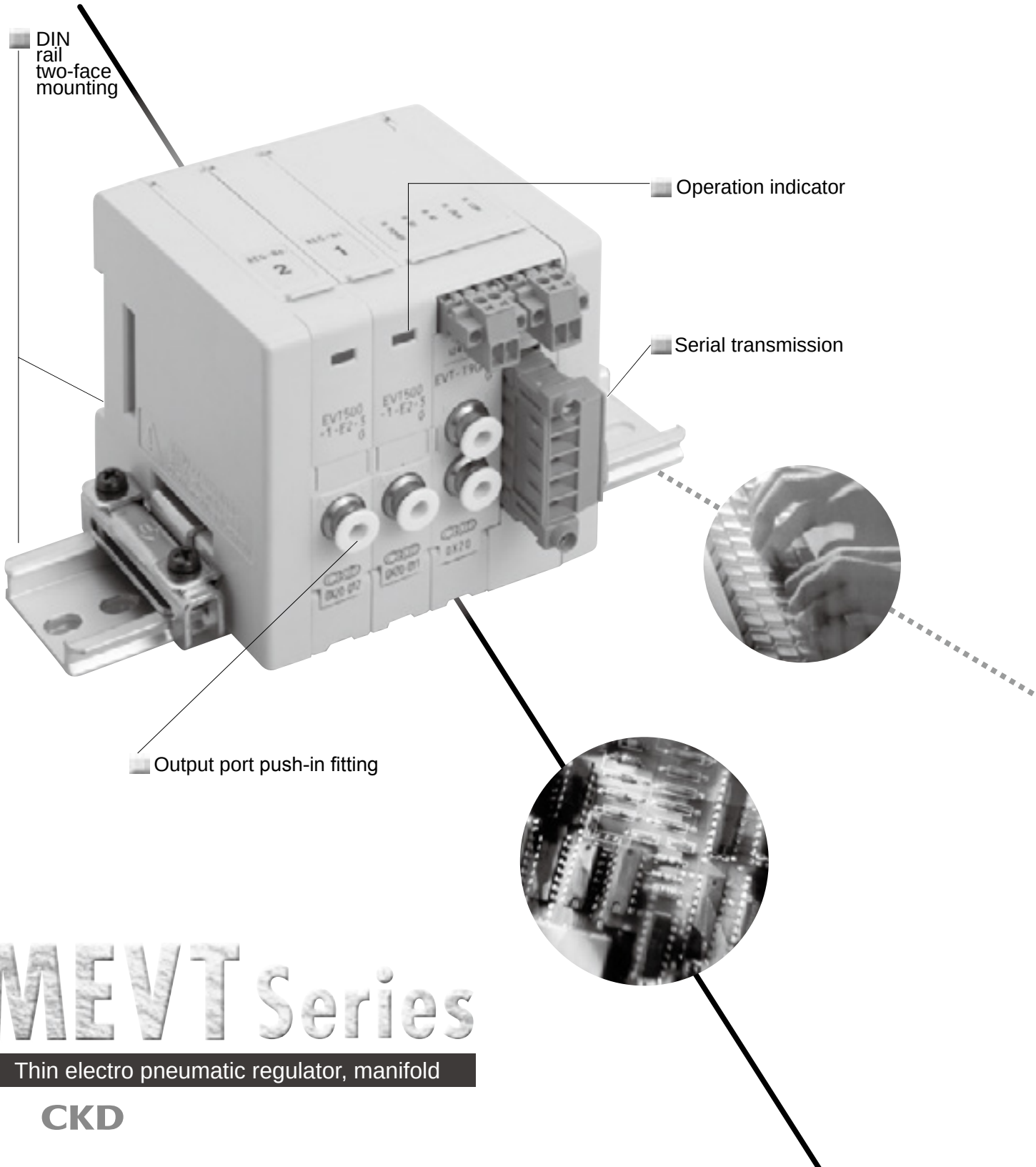

MEVT Series

Thin electro pneumatic regulator, manifold

14 mm thin and 80 g lightweight

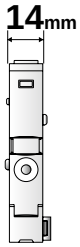

With this high integration type, up to 12 manifold stations can be used.

Network-compatible

The serial transmission, common terminal block and D sub-connector wiring blocks are available.

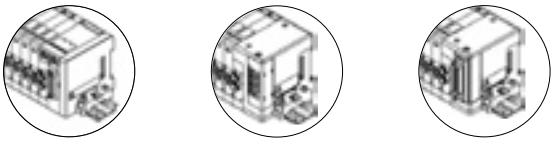

● Serial transmission ● Common terminal block ● D sub-connector

2-color display of the operational status

On the 2-color operation indicator (PAT.PEND), green means the pressure is within the set value and red means the pressure is outside the set value or an error status.

Easy to pipe/wire

Piping and wiring have been centralized on the body front, improving workability and reducing space.

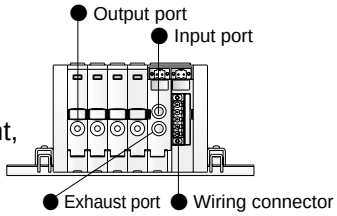

2 installation directions (PAT.PEND)

This regulator can be installed either on the bottom or on the back.
The surface for installation and work can be selected freely.

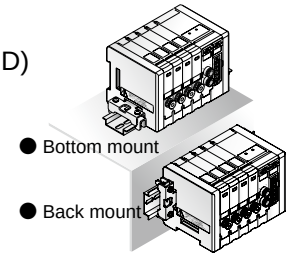

High precision/high-speed response

High precision and high-speed response control of fluid pressure using electric signals. Repeatability is 0.3% F.S. and response time is 0.1 sec. (with no load) * Refer to specifications

Eco-friendly product

Material names are shown on the major components.
Products can be sorted and processed for recycling.

Applications

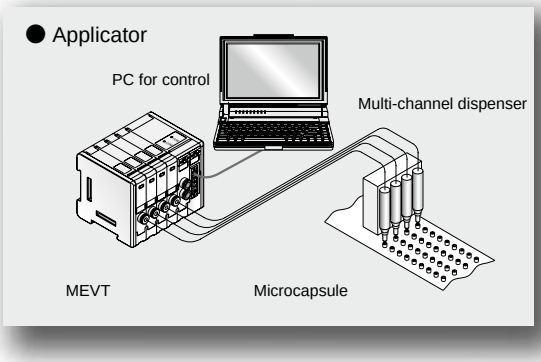

Other applications

● Fluid precise constant discharge system
· IC chip bonding
· CB cream soldering
· PCB coating
· UV adhesive, etc.

● CMP grinder

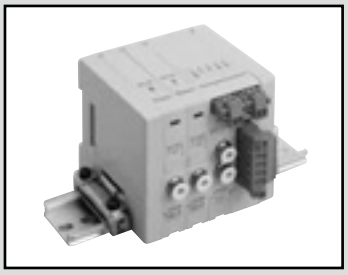

Thin electro pneumatic regulator/
reduced wiring manifold

MEVT Series

JIS symbol

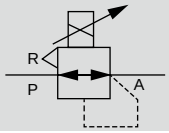

Specifications (*1)

Item		EVT100	EVT500
Working fluid		Clean compressed air (JIS B 8392-1: 2012 (ISO 8573-1: 2010) [1:3:2] or equivalent)	
Max. working pressure		200 kPa (≈29 psi, 2 bar)	0.7 MPa (≈100 psi, 7 bar)
Min. working pressure		Set pressure + max. control pressure x 0.1	
Proof pressure	Inlet	300 kPa (≈44 psi, 3 bar)	1.05 MPa (≈150 psi, 10.5 bar)
	Output side	150 kPa (≈22 psi, 1.5 bar)	0.75 MPa (≈110 psi, 7.5 bar)
Pressure control range		0 (≈0 psi, 0 bar) to 100 kPa (≈15 psi, 1 bar)	0 (≈0 psi, 0 bar) to 0.5 MPa (≈73 psi, 5 bar)
Power supply voltage		24 VDC ± 10% (stabilized power supply with ripple rate 1% or less)	
Current consumption		0.1A or less	
Input signal (input impedance)		0 to 10 VDC(6.6 kΩ) 0 to 5 VDC(3.3 kΩ) 4 to 20 mA	
Analog output *2		1 to 5 VDC (load impedance 1 kΩ and over)	
Insulation resistance		100 MΩ (500 VDC) and over	
Withstand voltage		1500 VAC 1 min.	
Hysteresis *3		0.4% F.S. or less	
Linearity *3		±0.5% F.S. or less	
Resolution *3		0.1% F.S. or less	
Repeatability *3		0.3% F.S. or less	
Temperature characteristics	Zero point fluctuation	±0.15% F.S./°C or less	
	Span fluctuation	±0.07% F.S./°C or less	
Max. flow rate (ANR) *4		2 ℓ/min	6 ℓ/min
Step response *5	No load	0.1 s or less	
	15 cm^3 Load	0.5 s or less	
Ambient temperature		5 (41°F) to 50 (122°F)°C	
Fluid temperature		5 (41°F) to 50 (122°F)°C	
Indicator *6		2-color display	
Lubrication		Not available	
Mounting orientation		Free	
Atmosphere		Cannot be used in corrosive gas environments	
Boundary dimension		W14×D75×H75	
Port size		ø4, ø6 push-in fitting (selection)	
Weight		80 g	

*1 : The above characteristics are the values where power voltage is 24 ± V 0.1 VDC, and measured at room temperature.
*2 : Analog output is not available for the serial transmission.
DeviceNet-compatible (T9DAR) and CC-Link-compatible (T9GAR) types have pressure monitor data. Refer to the serial transmission slave station specifications on page 653.)
*3 : The condition of the values above is: 25 ± 3°C ambient temperature, no load, working pressure of the max. control pressure x 1.1 (EVT100: 110 kPa, EVT500: 0.55 MPa), and 10 to 100% control pressure.
In addition, when the secondary side is a closed circuit, pressure fluctuations will occur if the product is used for blowing or for similar applications.
*4 : The conditions where working pressure is maximum and control pressure is maximum are shown.
*5 : The properties above are obtained at the max. working pressure and when the step feed changes from
50% F.S. → 100% F.S.
50% F.S. → 60% F.S.
50% F.S. → 40% F.S.
*6 : The indicator is a guideline and does not guarantee accuracy.

Manifold specifications

Item		Wiring/supply and exhaust block	
		T11R/T30R	T9DAR/T9GAR
Manifold		Block manifold	
Mounting method		DIN rail mount	
Supply and exhaust method		Common supply/common exhaust	
Max. station No.		8 stations	12 stations *1
Port size	Output port (A)	ø4, ø6 push-in fitting (selection)	
	Air supply (P)/exhaust port (R)	ø4, ø6 push-in fitting (selection)	

*1: The max. station No. per slave unit is 4 (T9DAR/T9GAR).

How to order

Manifold model No.

MEVT 500 - 0 C4 - T11R - 8 - U - 3

* Be sure to fill in the "Manifold specifications" (page 659).

Discrete EVT model No.

EVT 500 - 0 C4 — E2 — 3

Model No.

Ⓐ Pressure control range

Code	Description
Ⓐ Pressure control range	
100	0 to 100 kPa
500	0 to 0.5 MPa

Ⓑ Input signal

		Wiring/supply and exhaust block			
		T11R	**T30R**	**T9DAR**	**T9GAR**
0	0 to 10 VDC	●	●		
1	0 to 5 VDC	●	●	●	●
2	4 to 20 mA	●	●		

Ⓒ Port size *1 *2

Ⓒ Port size (output port (A))	
C4	ø4 Push-in fitting
C6	ø6 Push-in fitting

Ⓓ Wiring/Supply and exhaust block

Ⓓ Wiring/supply and exhaust block	
T11R	Common terminal block
T30R	D sub-connector
T9DAR	Serial transmission (DeviceNet 4 input points/4 output points)
T9GAR	Serial transmission (CC-Link Ver1.10 4 input points/4 output points)

Ⓔ Lead wire type

		Wiring/supply and exhaust block			
		T11R	**T30R**	**T9DAR**	**T9GAR**
E2	4P connector	●	●	●	●

Ⓕ Station No.

Ⓕ Station No.	
1	1 station
to	(Differs depending on the reduced wiring specifications.
12	12 stations Refer to the manifold specifications on page 658.)

Ⓖ DIN rail mounting direction

Ⓖ DIN rail mounting direction	
U	Bottom
B	Back

Ⓗ Power supply voltage

Ⓗ Power supply voltage	
3	24 VDC

⚠ Precautions for model selection

*1 : Indicate the port size of the input (P), exhaust (R) using the manifold specifications sheet of the wiring and supply/exhaust block sections.
*2 : A filter is integrated to input (P)/output (A) ports.

Clean-room specifications (Catalog No. CB-033SA)

● Anti-dust generation structure for use in cleanrooms

MEVT − ..... − P70

MEVT components and parts list

Common terminal block

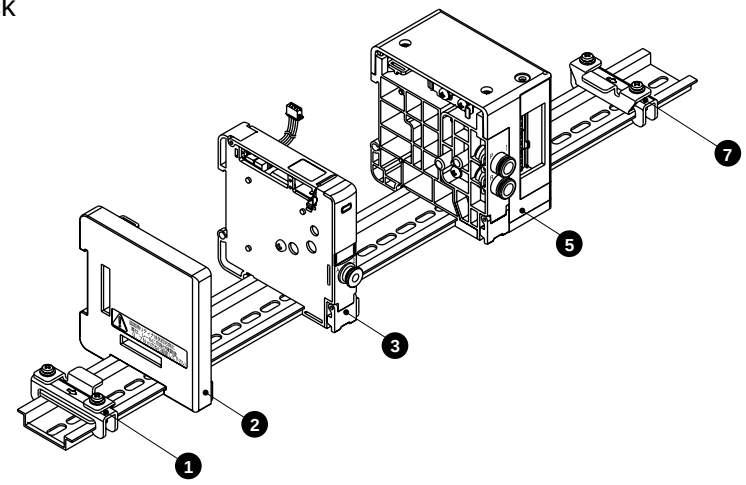

D sub-connector

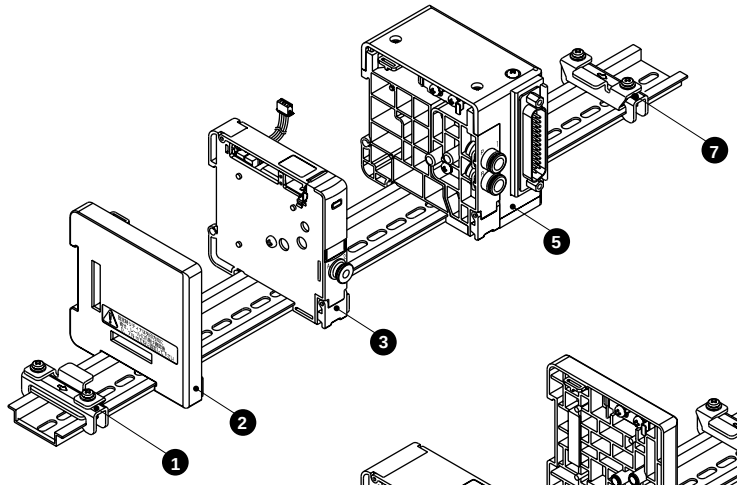

Serial transmission

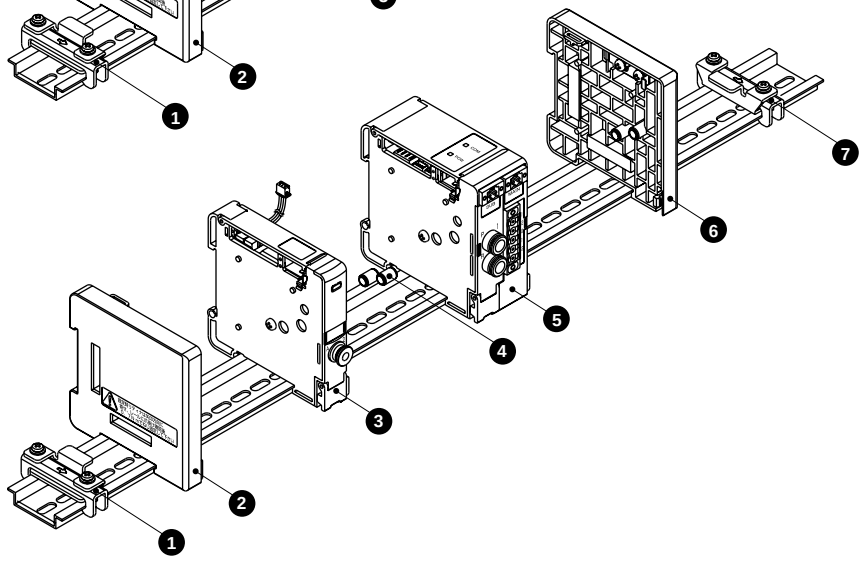

Main parts list

No.	Block component name	Model No.	No.	Block component name	Model No.
1	Retainer L	EVT-HL	5	Wiring/supply and exhaust block	EVT-T*
2	End block L	EVT-EL	6	End block R	EVT-ER
3	EVT	EVT*OO	7	Retainer R	EVT-HR
4	Piping fittings	EVT-P			

Weight

(g)

Block		Weight	Block		Weight
EVT	EVT*OO	80	Wiring/supply and exhaust block	T11R	115
End block	EVT-EL	30		T30R	125
	EVT-ER	30		T9*R	145
			Retainer	EVT-H*	25
			Piping fittings	EVT-P	-

Internal structure and parts list

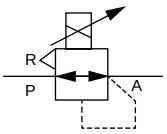

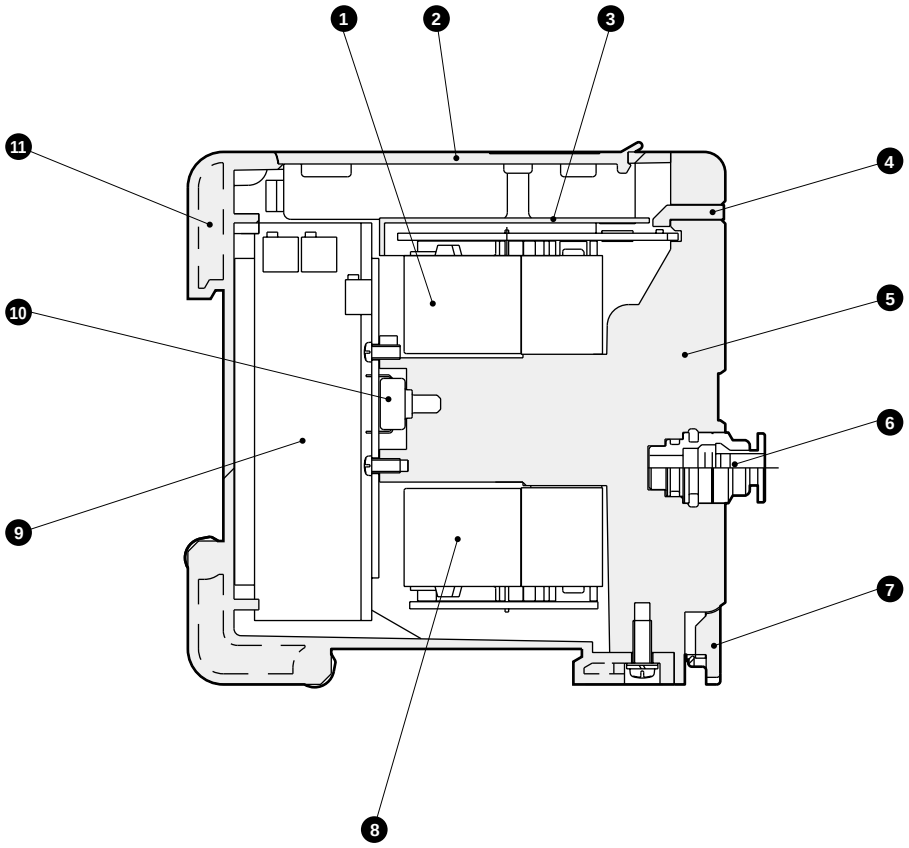

Cannot be disassembled

Main parts list

No.	Part name	Material	No.	Part name	Material
1	Solenoid valve for aid supply		7	Connecting hook plate	Polyamide resin
2	Wiring cover	ABS resin	8	Solenoid valve for exhaust	
3	Valve cover	ABS resin	9	Control board	
4	Display lens	Polycarbonate resin	10	Pressure sensor	
5	Body	Polyamide resin	11	Case	ABS resin
6	Push-in fitting				

Dimensions CAD

MEVT

● Common terminal block (T11R)

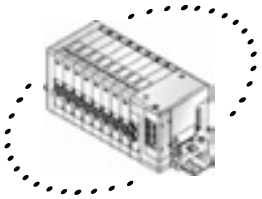

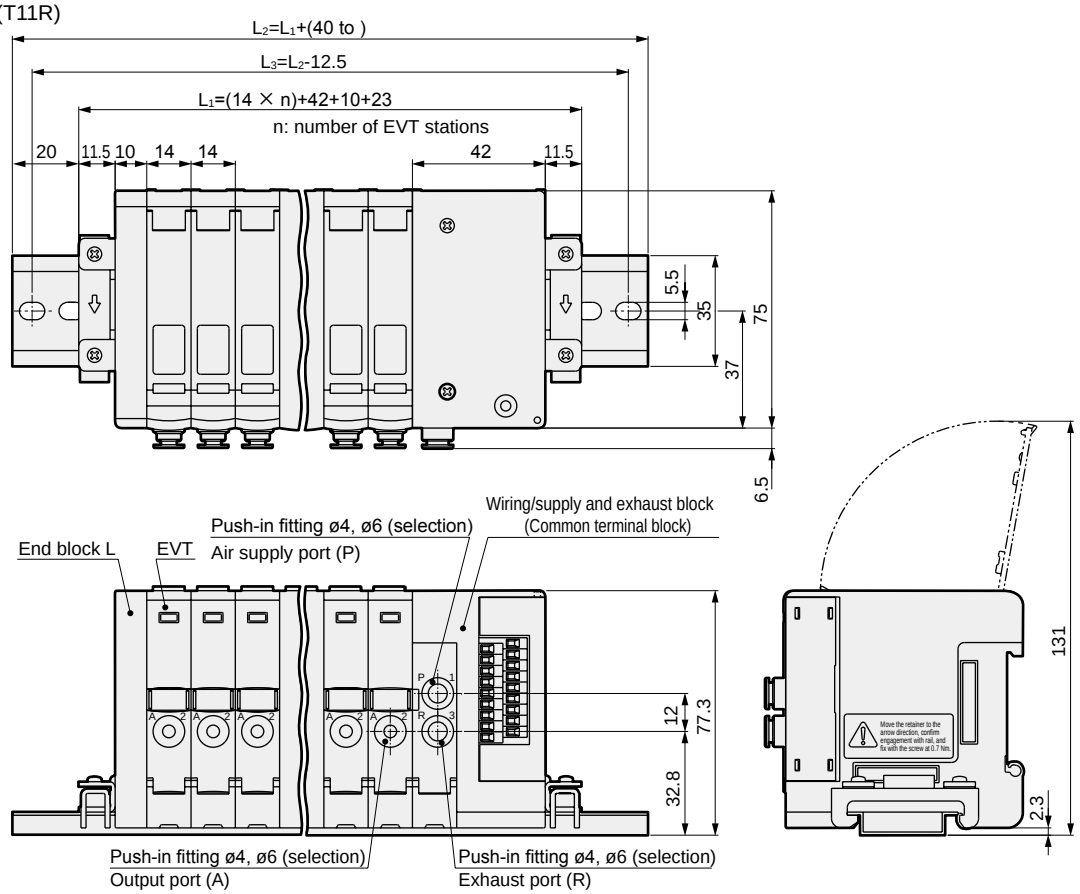

MEVT

● D sub-connector (T30R)

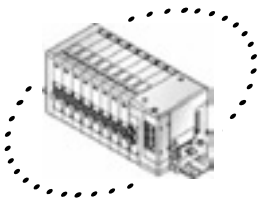

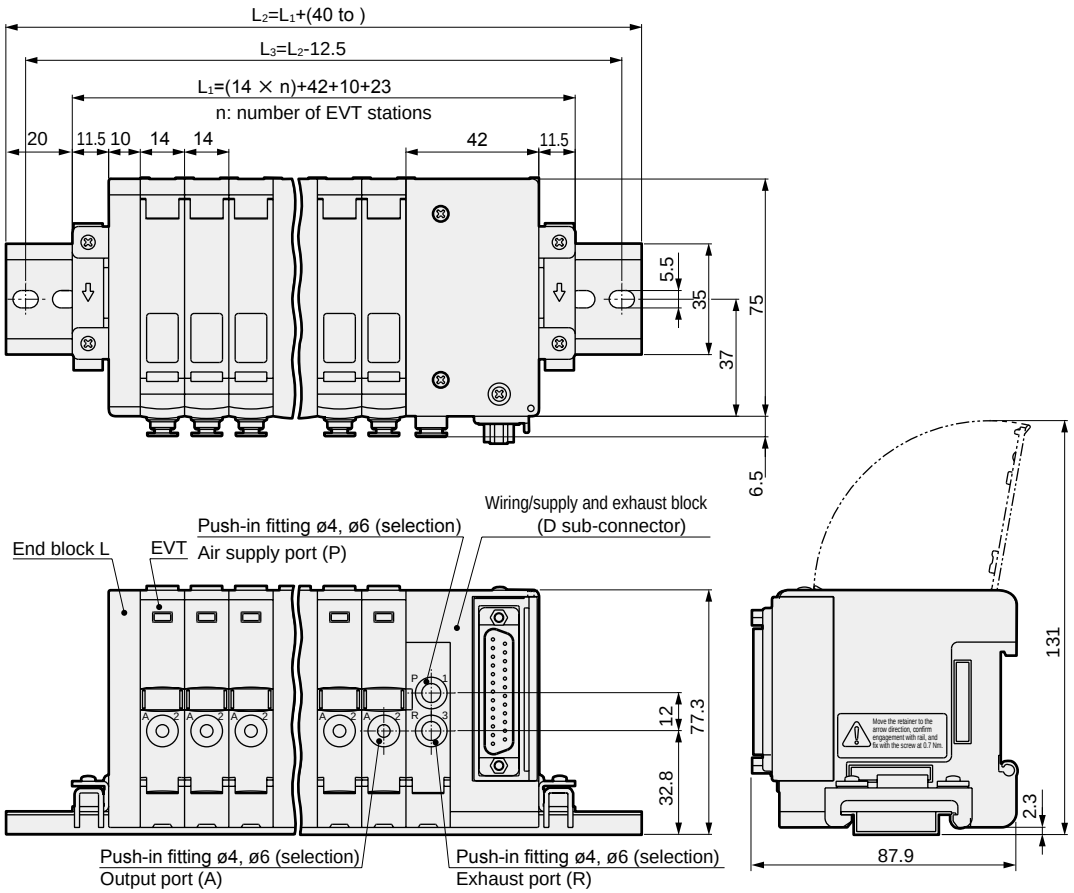

Dimensions

MEVT

● Serial transmission (T9*)

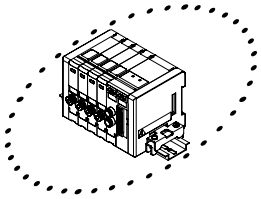

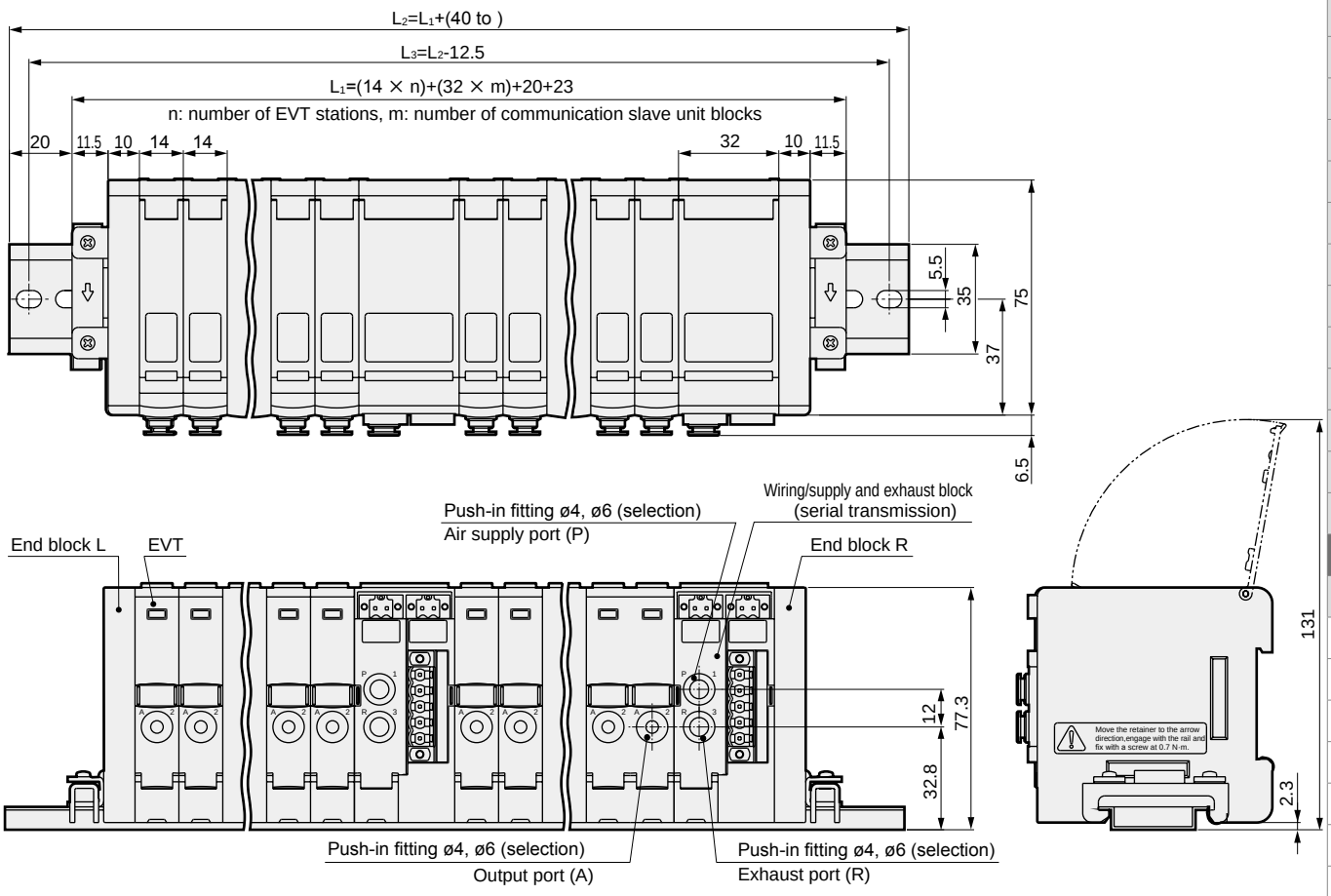

*1: The max. station No. per slave unit is 4 (T9DAR/T9GAR).

I/O characteristics

● Input signal 0 to 10 VDC

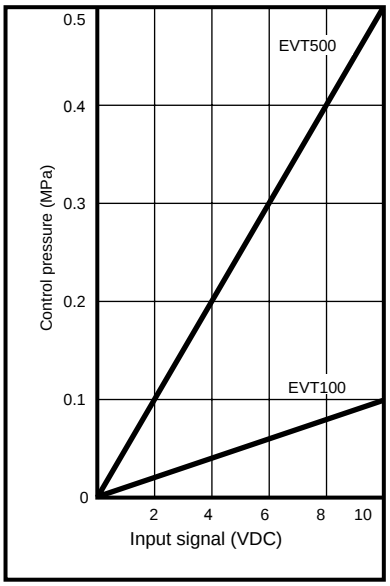

● Input signal 0 to 5 VDC

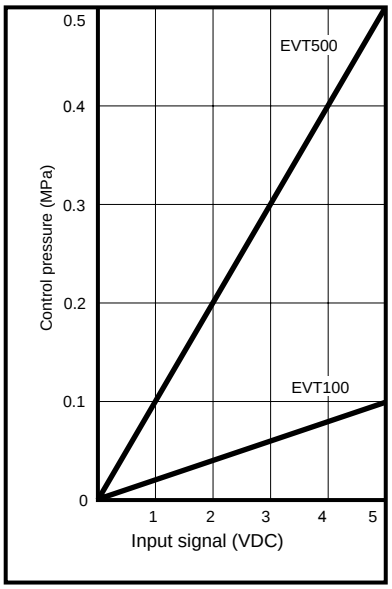

● Input signal 4 to 20 mA

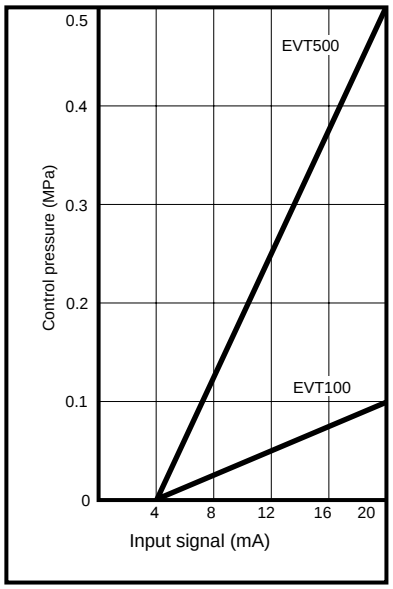

Flow characteristics

● EVT100

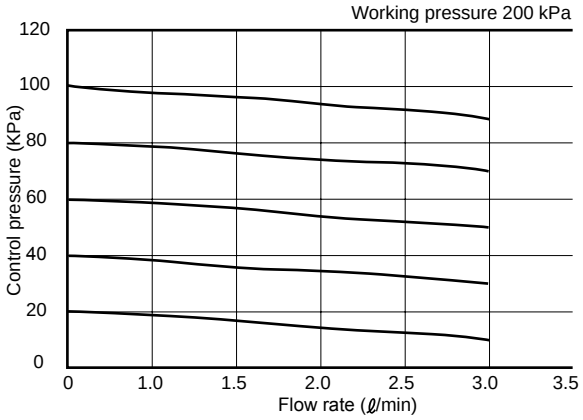

● EVT500

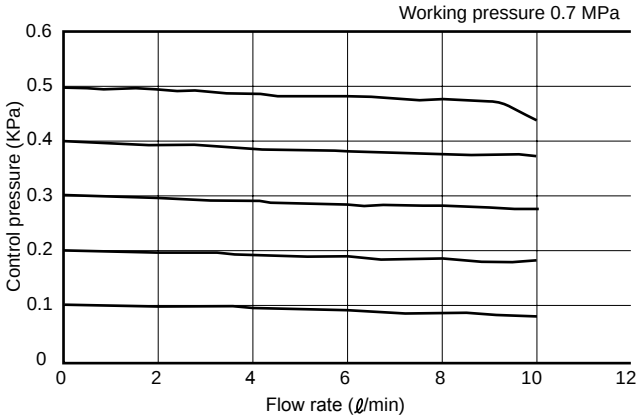

MEMO

MEVT: Block components

● EVT single unit

(1) Required station No. of EVT can be placed on a DIN rail.
However, the max. number of stations depends on the wiring method. (Refer to page 649.)
(2) Viewed from the fitting, nominal station No. of EVT is assigned as 1, 2, 3, ⋯ from right.
(3) REG-Nos. on the EVT wiring covers are numbered in order of 1, 2, 3... from the nearest one and reset for each wiring and supply/exhaust block.

● Wiring/supply and exhaust block

(1) At the connecting part of each block, a number of blocks can be freely connected.

● End block

(1) For a serial transmission, install the blocks to both sides.
(2) When using the common terminal block or D sub-connector, mount only on the opposite side of the wiring and supply/exhaust blocks.

MEVT Configuration

Piping

Wiring

Related products

Piping block

Ⓐ Discrete EVT
● 4P connector (For common terminal block, D sub-connector
For DeviceNet, CC-Link)

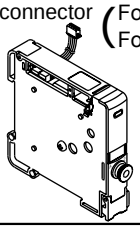

Ⓑ End block
● For left side

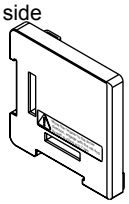

● For right side (serial transmission)

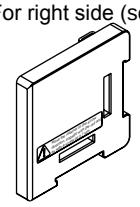

Wiring/supply and exhaust block

Ⓒ Common terminal block

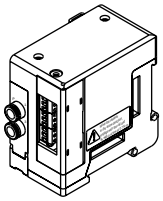

Ⓓ D sub-connector

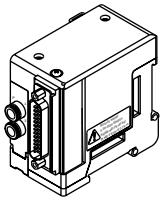

Ⓔ Serial transmission

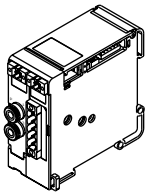

Related products

Ⓕ Related products
● DIN rail

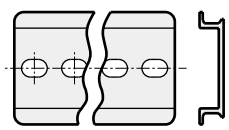

● Silencer

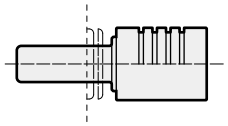

● Blanking plug

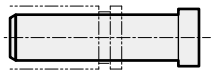

Piping

A. EVT single unit

Refer to pages 638 and 639 for selection guide.

B. End block

For a serial transmission (T9*), install the block to both ends of the manifold.
When using the common terminal block (T11R) or D sub-connector (T30R), mount only on the opposite side (EVT-EL) of the wiring and supply/exhaust blocks.

EVT - E R

Model No. Ⓐ Type Ⓑ Installation position

Ⓐ Type		Ⓑ Installation position	
E	Common exhaust	L	For left side
		R	For right side (serial transmission)

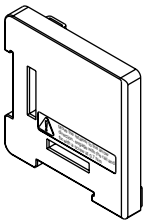

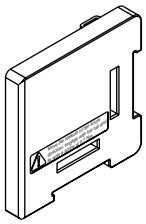

[Retainer]

Fix at both ends of manifold.

EVT - H R

Model No. Ⓐ Installation position

Ⓐ Installation position	
L	For left side
R	For right side

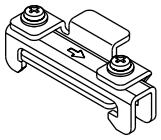

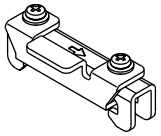

Wiring/supply and exhaust block

C. Common terminal block

EVT - T11R - C6

Model No. Type Ⓐ Input (P)/exhaust (R) port sizes

Ⓐ Input (P)/exhaust (R) port sizes	
C4	ø4 push-in fitting
C6	ø6 push-in fitting

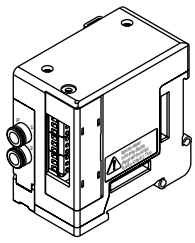

D. D sub-connector

EVT - T30R - C6

Model No. Type Ⓐ Input (P)/exhaust (R) port sizes

Ⓐ Input (P)/exhaust (R) port sizes	
C4	ø4 push-in fitting
C6	ø6 push-in fitting

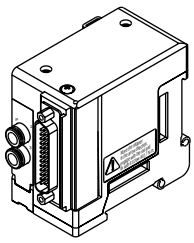

E. Serial transmission

EVT - T9DAR - C6

Model No. Ⓐ Type Ⓑ Input (P)/exhaust (R) port sizes

Ⓐ Type		Ⓑ Input (P)/exhaust (R) port sizes	
T9DAR	DeviceNet 4 input points/4 output points	C4	ø4 push-in fitting
T9GAR	CC-Link Ver 1.10 4 input points/4 output points	C6	ø6 push-in fitting

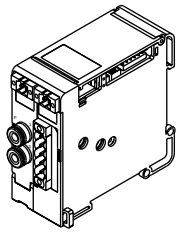

Related products DIN rail, silencer, blanking plug

DIN rail

EVT-BAA [Length]

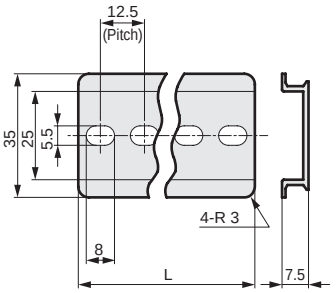

* Select [Length] from the DIN rail length selection table L_2 on page 658.

Silencer

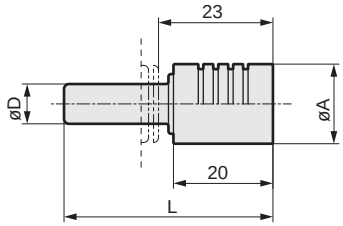

Model No.	D	L	A	Weight g
SLW-H6	ø6	41	16	3.9

Blanking plug

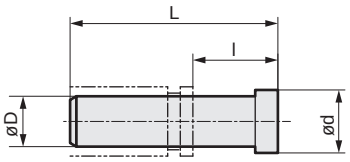

Model No.	D	L	l	d	Weight g
GWP4-B	ø4	27	9	6	0.4
GWP6-B	ø6	29	11	8	0.8

Common terminal block (T11R): Wiring method

Notes on wiring

[Precautions for common terminal box (T11R)]

With the piping port in front, station numbers on EVT are assigned from right. If voltage drops due to simultaneous communication or cable length, 4 to 20 mA of current is recommended for input signal.

Recommended terminal block screw tightening torque 0.25 N·m

Internal wiring method of T11R (up to 8 stations for EVT)

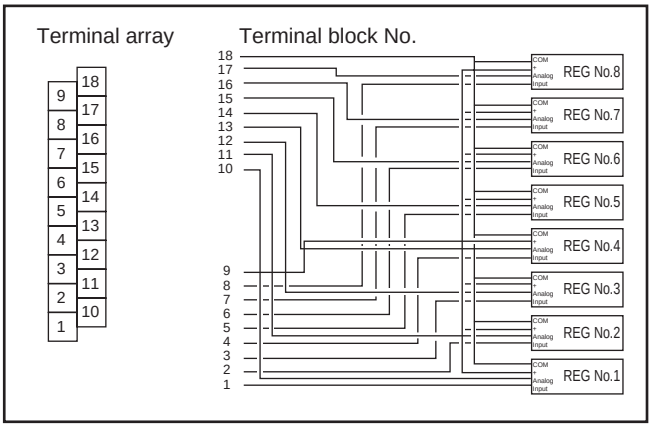

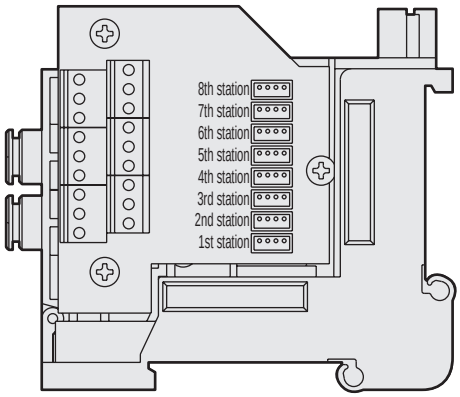

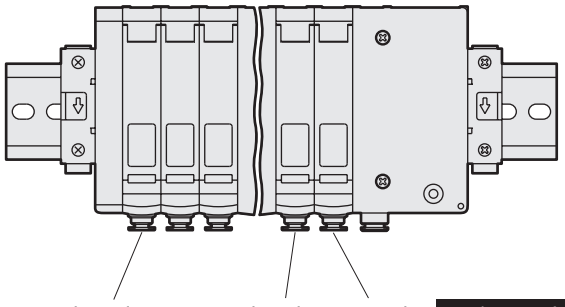

Terminal array of wiring method T11R

* Max. station No. of EVT is 8 stations.

Terminal No.

18	17	16	15	14	13	12	11	10
9	8	7	6	5	4	3	2	1

[Standard wiring]

Terminal No.	**18**	**17**	**16**	**15**	**14**	**13**	**12**	**11**	**10**
Terminal array	COM	Analog output 8	Analog output 7	Analog output 6	Analog output 5	Analog output 4	Analog output 3	Analog output 2	Analog output 1
Terminal No.	**9**	**8**	**7**	**6**	**5**	**4**	**3**	**2**	**1**
Terminal array	Power supply +	Input signal 8	Input signal 7	Input signal 6	Input signal 5	Input signal 4	Input signal 3	Input signal 2	Input signal 1

D sub-connector (T30R): Wiring method

D sub-connector (T30R)

The connector used for wiring method T30R is generally called a D sub-connector and is widely used in FA and OA components. The 25P is an RS-232C Standards designated connector especially used for personal computer communication.

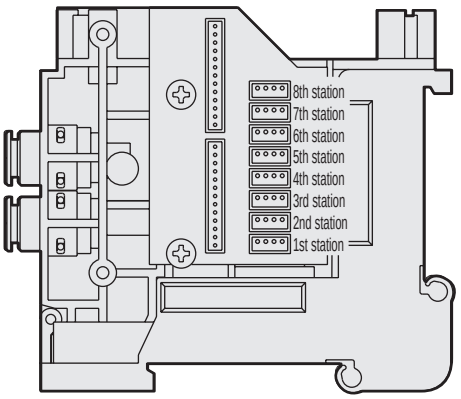

[Precautions for D sub-connector (T30R)]

With the piping port in front, station numbers on EVT are assigned from right.
If voltage drops due to simultaneous communication or cable length, 4 to 20 mA of current is recommended for input signal.

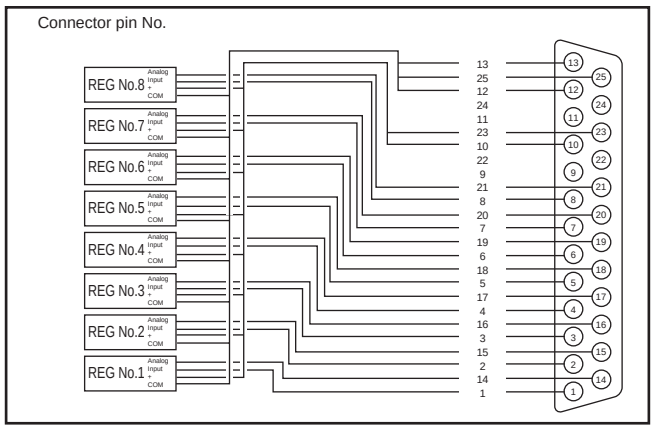

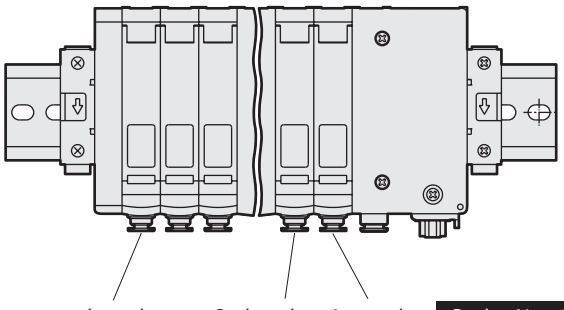

T30R connector pin array (example)

* Max. station No. of EVT is 8 stations.

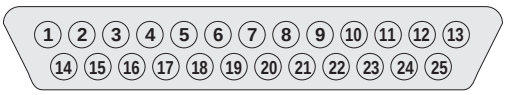

Pin No.	1	2	3	4	5	6	7	8	9	10	11	12	13
Pin array	Input signal 1	Input signal 2	Input signal 3	Input signal 4	Input signal 5	Input signal 6	Input signal 7	Input signal 8	(Blank)	Power supply +	(Blank)	COM	COM
Pin No.	**14**	**15**	**16**	**17**	**18**	**19**	**20**	**21**	**22**	**23**	**24**	**25**	
Pin array	Analog output 1	Analog output 2	Analog output 3	Analog output 4	Analog output 5	Analog output 6	Analog output 7	Analog output 8	(Blank)	Power supply +	(Blank)	COM	

How to order cable with D sub-connector

EVT - CABLE - D 0 0 - 5

D sub-connector pin No. and conductor

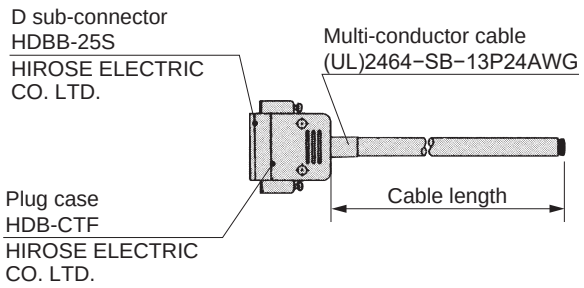

Cable length	Weight g
5 m	793

D sub-connector pin No.		1	2	3	4	5	6	7	8	9	10	11	12	13
Conductor identification	Insulator color	Yellow	Green	Gray	White	Yellow	Green	Gray	White	Yellow	Orange	Green	Orange	Orange
	Marker type	1 point	1 point	1 point	1 point	2 points	2 points	2 points	2 points	3 points	1 point	3 points	1 point	2 points
	Marker color	Black	Black	Black	Black	Black	Black	Black	Black	Black	Red	Black	Black	Black

D sub-connector pin No.		14	15	16	17	18	19	20	21	22	23	24	25	
Conductor identification	Insulator color	Yellow	Green	Gray	White	Yellow	Green	Gray	White	Yellow	Orange	Orange	Orange	
	Marker type	1 point	1 point	1 point	1 point	2 points	2 points	2 points	2 points	3 points	2 points	3 points	3 points	
	Marker color	Red	Red	Red	Red	Red	Red	Red	Red	Red	Red	Red	Black	

Serial transmission (T9*): Wiring method

[Serial transmission (T9*)]

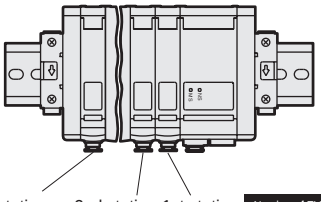

- The slave unit's output No. differs with the manufacturer. The internal connector No. and EVT correspond as shown below.
- With the piping port in front, station numbers on EVT are assigned from right.
- Since internal connectors are wired in order, if there are fewer EVT stations than wiring and supply/exhaust blocks, some connectors are left open. Do not use these open connectors for drives other than EVTs in use.
- Do not remove the protective connectors connected to blank connectors or a malfunction may occur.
- The working power is 24 VDC dedicated.
- A slave unit for each communication system is used. Contact CKD for usable PLC models, host unit model numbers and communication system specifications. (Refer to page 653)
- To ensure network reliability, use the communication cable recommended for each communication system.
- Securely fix the enclosed connector with fixing screws. (Refer to the table at right for the proper tightening torque)
- The SUB power supply terminal is only for crossover wiring. Use the MAIN power supply terminal when connecting a single wire. Do not allow power to be applied to both the SUB and MAIN power supply terminals. Otherwise malfunction may occur.
- MAIN and SUB power terminals are connected internally. When not using the SUB power terminal, connect the enclosed connector to prevent short-circuiting.

	Cable fixing screw	Connector fixing screw
Power supply connector	0.25 N·m	0.4 N·m
Communication connector	0.5 N·m	

[Wiring power cable]

Connect the power cable to MAIN when using one slave unit (wiring/supply and exhaust blocks).

* Check power polarity.

T9DAR/T9GAR: Left 24 V, Right 0 V
: Left 0 V, Right 24 V

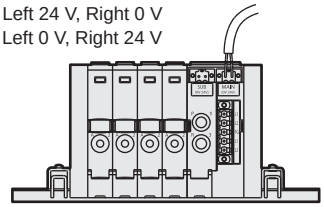

When using more than one slave unit (wiring and supply/exhaust blocks)
Connect one power cable to the first MAIN, and then from SUB to the next MAIN.

* Check power polarity.

T9DAR/T9GAR: Left 24 V, Right 0 V
: Left 0 V, Right 24 V

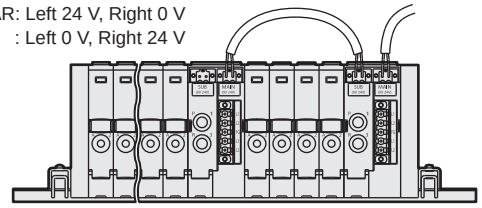

* Refer to the table below for EVT station No.

Max. EVT station No.

Slave unit (wiring and supply/ exhaust blocks) model No.	Communication system name	Max. EVT station No.		
		When using 1 slave unit	When using 2 slave units	When using 3 slave units
T9DAR	DeviceNet	4 units	8 units	12 units
T9GAR	CC-Link	4 units	8 units	12 units

Up to three slave units can be connected per manifold.

Correspondence of wiring method T9* channel No. and connector No.

T9DAR				
Slave unit output channel No. (Pressure setting data)	0(1)	1(2)	2(3)	3(4)
Slave unit input channel No. (Pressure monitor data)	0(1)	1(2)	2(3)	3(4)
Connector No. (REG No.) (number of EVT stations)	**1**	**2**	**3**	**4**

* The channel No. may be counted from "1" depending on the master.

T9GAR				
Slave unit output channel No. (Pressure setting data)	1	2	3	4
Slave unit input channel No. (Pressure monitor data)	1	2	3	4
Connector No. (REG No.) (number of EVT stations)	**1**	**2**	**3**	**4**

Internal connector No.

T9DAR

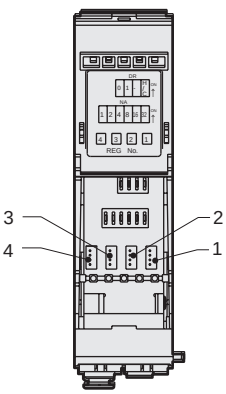

T9GAR

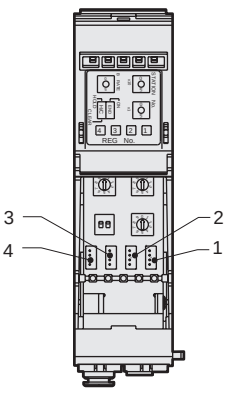

Serial transmission slave unit specifications (Refer to the table below for the applicable PLC correspondence table)

Item		T9DAR	T9GAR
Communication subject		DeviceNet *1	CC-Link Ver1.10 *2
Communication speed		125kbps/250kbps/500kbps	156kbps/625kbps/2.5Mbps/ 5Mbps/10Mbps
Power supply voltage		24 VDC ± 10% *3 (Unit power supply/regulator power supply common terminal) Communication power supply (V+, V-): 11 to 25 VDC	24 VDC ± 10% *3 (Unit power supply/regulator power supply common terminal)
Current consumption		60 mA or less Load current is not included Communication power supply (V+, V-): 50 mA or less	80 mA or less Load current is not included
Max. output points (DA output)		4 points	
Max. input points (AD input)		4 points	
DA output	Pressure setting data	12 bit	
	Accuracy *4	±1% F.S. or less	
AD input	Pressure monitor data	12 bit	
	Accuracy *5	± 6% F.S. or less	
Occupied		Occupied output memory: 2 x n (byte) *6 Occupied input memory: 2 x n (byte) *6	Occupied unit No.: 1 station (Remote device station)

*1 Contact CKD regarding EDS file.
*2 Contact CKD regarding profile.
*3 To secure output accuracy, use safety power supply with 1% or less of ripple ratio.
*4 DA output accuracy does not include EVT accuracy.
*5 AD input accuracy includes EVT monitor accuracy.
*6 The slave unit memory occupied by the PLC is determined by the number of EVT units (n) connected when the slave unit's power is turned ON.
(Note that if no units are connected, the memory for four units is occupied)

PLC compatibility table

Model No.	Manufacturer (recommended organization)	Series	Comm system	Host unit model No.
T9DAR	ODVA	DeviceNet compatible PLCs, PCs and SBCs of various makers	DeviceNet	Connected to manufacturers DeviceNet compatible master
	OMRON Corporation	SYSMAC CS Series SYSMAC CJ Series SYSMAC CV Series SYSMAC α Series SYSMAC C200HS Series Others	DeviceNet (CompoBus/D)	CS1W-DRM21-V1 CJ1W-DRM21 CVM1-DRM21-V1 C200HW-DRM21-V1 ITNC-EI□01-DRM (PLC with master) 3G8B3-DRM21 (VME board) Other DeviceNet compatible masters
	Toyota Electric Corporation	PC3J/2J Series PC3JD PC2F/PC2FS	DeviceNet (DLNK)	THK-5398 TIC-5642 (PLC with master) TFU-5359 Other DeviceNet compatible masters
T9GAR	CLPA	CC-Link compatible PLCs, PCs and SBCs of various makers	CC-Link	Connected to manufacturers CC-Link compatible master
	Mitsubishi Electric Corporation	MELSEC A Series MELSEC QnA Series MELSEC Q Series others	CC-Link	AJ61BT11 AJ61QBT11 A1SJ61BT11 A1SJ61QBT11 QJ61BT11 A80BD-J61BT11 (for PCI bus) Other CC-Link compatible masters

Model No.	LED display	Wiring and setting method

T9DAR

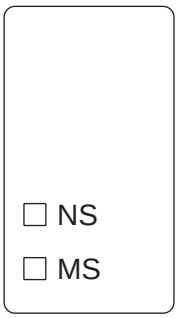

LED name	Display description
NS	Displays network status
MS	Displays slave unit status

Wiring method

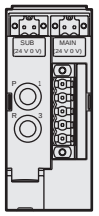

(Black)	V-
(Blue)	CAN_L
(None)	Drain
(White)	CAN_H
(Red)	V+

Previous station — DeviceNet cable — T branch tap — Following station

The wiring section connector is included.
Pay attention to the polarity of the power supply (left: 24 V, right: 0 V).
Unit power and regulator power use a common terminal.
The power connector (24 V, 0 V) is insulated from communication power (V+, V-).

Multi-drop method

T-branch method

Setting method

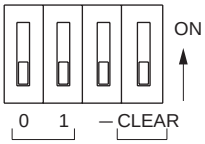

Set communication speed.

Set output status if a communication error occurs.

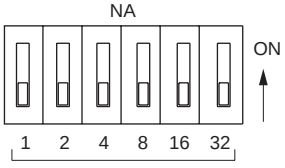

Set the slave unit address.

Communication speed	0	1
125kbps	OFF	OFF
250kbps	ON	OFF
500kbps	OFF	ON
Setting not available	ON	ON

HOLD/CLEAR setting

◆HOLD
If a communication error occurs, the status of output is held in the state just before the error occurred. (only for set addresses)
Note: Output may not be held depending on the state of the error.

◆CLEAR
If a communication error occurs, all channels are turned OFF (0 data output to EVT). (Only for set addresses)

Caution

- Output to EVT is output simultaneously for all channels.
- Refer to the slave unit specifications for details on occupied memory.
- Contact CKD regarding information on the EDS file.

T9GAR



LED name	Display description
LERR	Illuminates when transmission error occurs. Turns OFF when time has lapsed. Illuminates when the station No. setting or transmission speed setting is incorrect. Blinks when station No. or transmission speed setting changes.
LRUN	Lights when receiving normal data, and turns OFF at timeover. (Lights when receiving normal data.)
RD	Lights when receiving data.
SD	Lights when transmitting data.
POWER	Lights when power is ON.

Wiring method

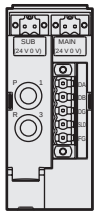

(Blue)	DA
(White)	DB
(Yellow)	DG
(Bare)	SLD
	FG

Previous station — CC-Link dedicated cable — Following station

DA (Blue)
DB (White)
DG (Yellow)
SLD (Bare)
FG

* SLD and FG are short-circuited in the slave unit.

The wiring section connector is included.
Pay attention to the polarity of the power supply (left: 24 V, right: 0 V). Unit power and regulator power use a common terminal.

Setting method

Set the transmission speed.
0: 156 kbps 3: 5 Mbps
1: 625 kbps 4: 10 Mbps
2: 2.5 Mbps 5 and over: Not used

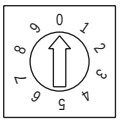

B RATE

Set the slave unit's station No. (in the one's place)

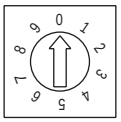

STATION No. (x1)

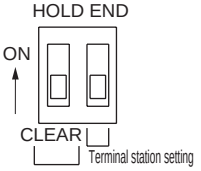

Set output status if a communication error occurs.

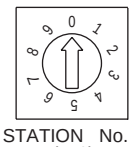

STATION No. (x10)

Set the slave unit's station No. (in the ten's place)

HOLD/CLEAR setting

◆HOLD
· When the "analog output enabling signal" flag turns OFF, output of the corresponding channel retains the status from just before the flag is turned OFF.
· If a communication error occurs, the status of output of all channels is held in the state just before the error occurred. (Only for set addresses)
Note: Output may not be held depending on the state of the error.

◆CLEAR
· When the "analog output enabling signal" flag turns OFF, all channels are turned OFF (0 data output to EVT).
· If a communication error occurs, all channels are turned OFF (0 data output to EVT). (Only for set addresses)

Terminal station setting

This product has a 110 Ω terminator between DA and DB communication lines. The terminal station is set by turning the terminal station setting switch ON. A terminator need not be connected to the product's connector.
[CAUTION]
Be sure to turn the terminal station setting switch OFF when this product is the terminal station and a CC-Link-dedicated cable (CC-Link dedicated high performance cable (Kuramo Electric FANC-SBH)) requiring terminal resistance other than 110 Ω is used for the communication cable. This also applies when the terminator's connection differs due to a T-branch connection. Connect a commercially available terminator or the one included with the master station to this product's connector based on connection conditions (specifications). Insulate this terminator.

Caution

- Output to EVT is output simultaneously for all channels.
- Contact CKD regarding information on PRO files.

MEMO

Exploded view of MEVT

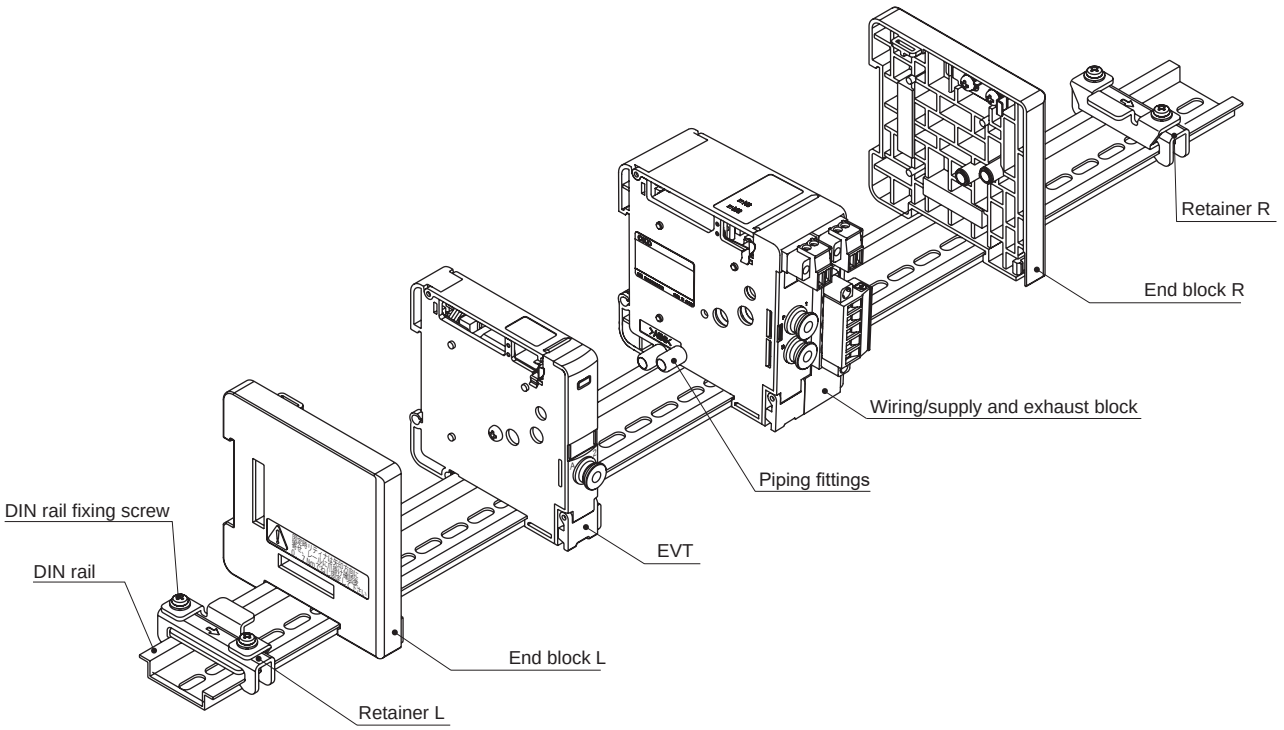

Increasing and reducing the EVT stations

1. Loosen the retainer's DIN rail Ⓐ fixing screw.
2. Open the EVT wiring cover Ⓑ.
3. When using the common terminal block or D sub-connector, slide the end hook R Ⓔ and release the hook. Next, loosen and remove screws on the wiring cover. For the serial transmission, open the wiring cover Ⓒ. (In the case of a common terminal block, check that the wiring cover Ⓓ does not catch on the terminal block.)

Common terminal block (T11R)

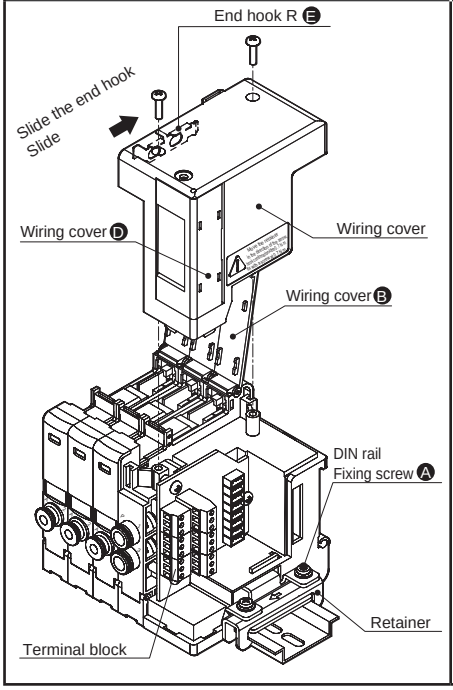

D-sub-connector (T30R)

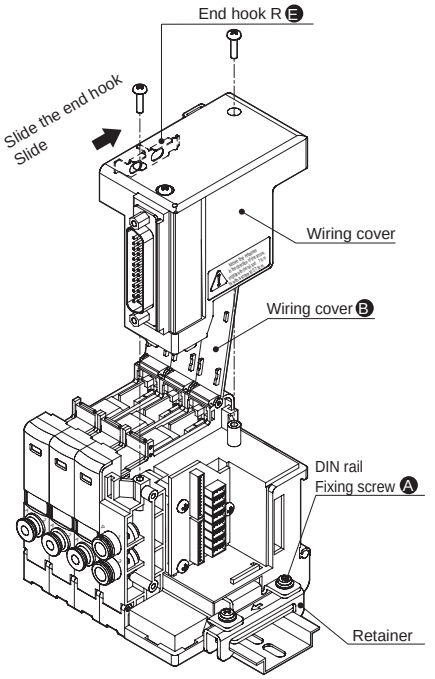

Serial transmission (T9*)

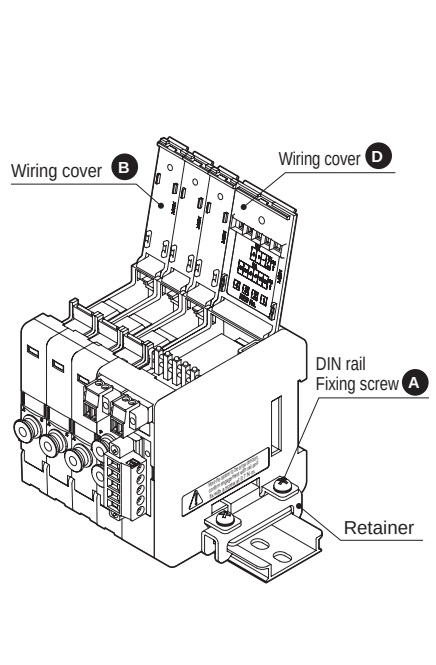

4. Remove the connecting hook spring Ⓕ and connecting hook plate Ⓖ where the manifold is to be increased, and remove the connection between the blocks.
5. Separate blocks to be expanded.

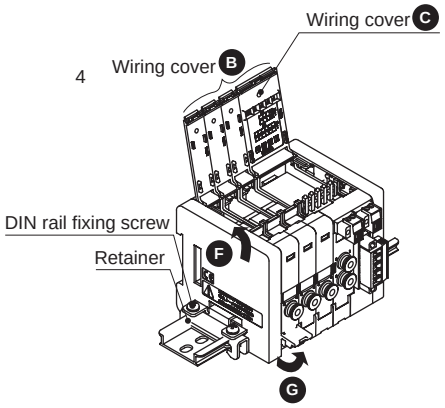

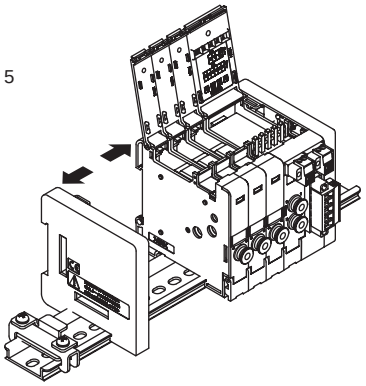

6. Insert two piping fittings Ⓗ into the input (P) and exhaust (R) ports at the separated section.
(Note: At the separated section, two piping fittings Ⓗ protrude from each side (4 fittings in all)).

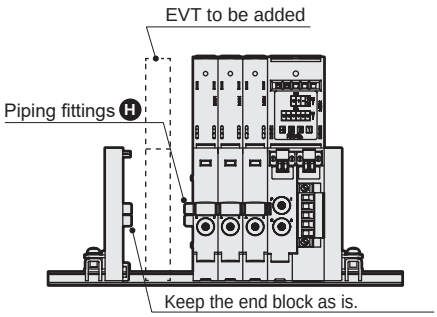

7 . Mount the EVT to be added to the DIN rail.

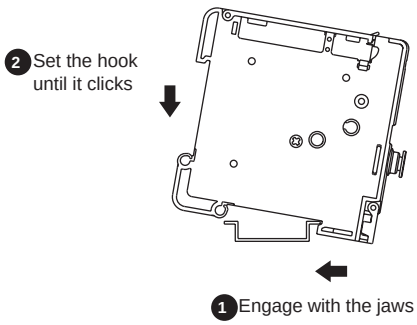

8. Press so that there is no gap between blocks, and close the connecting hook spring Ⓕ and connecting hook plate Ⓖ to connect the blocks.
9. Insert signal wires for the expanded EVT to connectors in the wiring and supply/exhaust blocks.
10. For the serial transmission, close the wiring cover Ⓒ. When using the common terminal block or D sub-connector, fit the wiring cover on, fix it in place with screws, and return the end hook R Ⓔ to the original position. (Tightening torque: 0.35 to 0.5 N·m)
11. Close the wiring cover Ⓑ while taking care not to catch the signal wires.
12. Engage the
(1) retainer fingers with the DIN rail.
(2) Press so that there is no gap between blocks.
(3) Press the retainer in the direction of the arrow. Tighten the
(4) DIN rail fixing screw Ⓐ.
(Recommended tightening torque: 0.6 to 0.8 N·m)

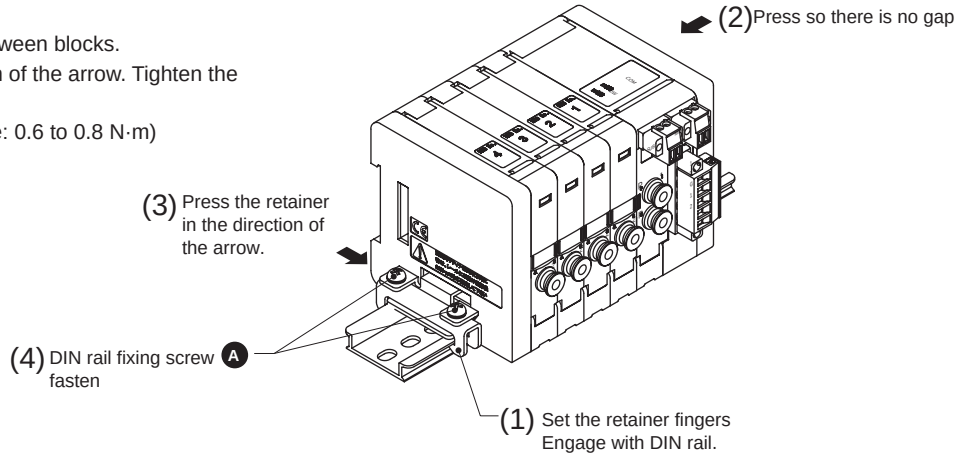

How to fill out MEVT manifold specifications sheet (Ver. 2)

● Manifold model No. (example)

MEVT 500 - 1 C4 - T9DAR - 12 - U - 3

Model No. | A Pressure control range | B Control input signal | C Port size | D Wiring/Supply and exhaust block | F Station No. | G DIN rail mounting direction | H Voltage

Part name	Model No.	Layout position 1	2	3	4	5	6	7	8	9	10	11	12	13	14	15	16	17	18	19	20	21	22	23	24	25	26	27	28	29	30	31	Quantity
EVT	**EVT** 500 - 1 C4		○	○	○	○		○	○	○	○		○	○	○	○																	12
	EVT -																																
	EVT -																																
	EVT -																																
	EVT -																																
Wiring/supply/exhaust block	**EVT-T** 9DA **R-** C4						○					○					○																3
End block	**EVT-EL** (for left side)	○																															1
	EVT-ER (for right side)																	○															1
DIN rail	**L2=**	Accessory	Blanking plug **GWP4-B**			**GWP6-B**			Silencer **SLW-H6**																										

*1 DIN rail length (L_2)

(1) Find DIN rail length by the calculation shown below.

The obtained length is standard. (2) For standard length, length (L_2) is not required on the specification sheet.

Indicate the length when using a non-standard length. Select the length based on the following DIN rail length setting table L_2.

● How to calculate length of DIN rail

Manifold length (L_1) = (A x n) + (B x m) + (C x l) + D x 2
(EVT: A x n; Wiring/supply and exhaust block: B x m; End block: C x l; Retainer: D x 2)

DIN rail length (L_2) = L2' x 12.5

$$L_2' : \frac{L_1 + 40}{12.5} \rightarrow \text{round up to integer}$$

DIN rail mounting pitch (L_3) = L_2 -12.5

*2 Multiple combinations between serial transmission

Multiple serial transmission can be combined and installed on the same DIN rail.
(Max. station No.: 12 (T9DAR/T9GAR))
Install EVT or end block next to serial transmission slave unit. Indicate the combination on the manifold specification sheet. Example) EVT: 12 stations, wiring, supply and exhaust block T9DAR: 4 units x 3

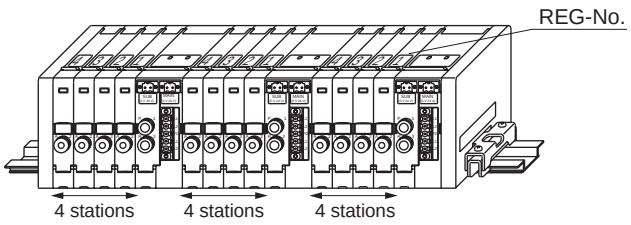

[Notes]
- With piping port facing front, set arrangement positions in order from the left.
- Refer to the block components (pages 646 to 648) and select the model No.
- Allocation numbers 1 to 31 on the table above are for reference. As shown on the EVT wiring cover, REG-No. is assigned as 1, 2, 3... per wiring/supply and exhaust block from the nearest side.

n, m and l show usage per block.
n: EVT m: Wiring/supply and exhaust block l: End block
A, B, C, D, and E indicate the length (width) of each block.

			Block width (mm)
A	**EVT**		14
B	Wiring/Supply and exhaust block	**T11R**	42
		T30R	42
		T9*	32
C	End block		10
D	Retainer		11.5

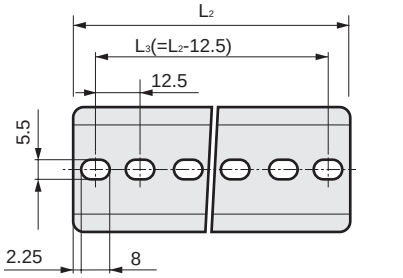

● DIN rail length setting table

L_1 · · Manifold length	97.5 or less	97.5 Over to 110 or less	110 to 122.5	122.5 to 135	135 to 147.5	147.5 to 160	160 to 172.5	172.5 to 185	185 to 197.5	197.5 to 210	210 to 222.5	222.5 to 235	235 to 247.5	247.5 to 260	260 to 272.5	272.5 to 285	285 to 297.5	297.5 to 310	310 to 322.5	322.5 to 335	335 to 347.5	347.5 to 360	360 to 372.5	372.5 to 385	385 to 397.5	397.5 to 410	410 to 422.5	422.5 to 435	435 to 477.5
L_2 · · Rail length	137.5	150	162.5	175	187.5	200	212.5	225	237.5	250	262.5	275	287.5	300	312.5	325	337.5	350	362.5	375	387.5	400	412.5	425	437.5	450	462.5	475	487.5
Pitch L_3	125	137.5	150	162.5	175	187.5	200	212.5	225	237.5	250	262.5	275	287.5	300	312.5	325	337.5	350	362.5	375	387.5	400	412.5	425	437.5	450	462.5	475

*1: When L_1 exceeds this table range, calculate according to "How to calculate DIN rail length".

MEVT Manifold specifications (Ver.2)

● Manifold model No.

MEVT □- □ □- □ - □ - □

Model No. | Ⓐ Pressure control range | Ⓑ Control input signal | Ⓒ Port size | Ⓓ Wiring/Supply and exhaust block | Ⓕ Station No. | Ⓖ DIN rail mounting direction | Ⓗ Voltage

Part name	Model No.	Layout position 1	2	3	4	5	6	7	8	9	10	11	12	13	14	15	16	17	18	19	20	21	22	23	24	25	26	27	28	29	30	31	Quantity
EVT	**EVT** □- □ □																																
	EVT □- □ □																																
	EVT □- □ □																																
	EVT □- □ □																																
	EVT □- □ □																																
Wiring/supply/exhaust block	**EVT-T** □ **R-** □																																
End block	**EVT-EL** (for left side)																																
	EVT-ER (for right side)																																

DIN rail	L_2= □	Accessory	Blanking plug				Silencer	
			GWP4-B		**GWP6-B**		**SLW-H6**	

· With piping port facing front, set arrangement positions in order from the left.
· As shown on the EVT wiring cover, REG-No. is assigned as 1, 2, 3, ⋯ per wiring/supply and exhaust block from the nearest side.
· Install wiring/supply and exhaust block to right side of EVT. As the serial transmission allows for left side installation, consult with CKD.

Safety Precautions

Be sure to read this section before use.

Product-specific cautions: Electro pneumatic regulator

Design/selection

⚠ CAUTION

■ Response is affected by working pressure and load volume. Also fluctuation of the working pressure affects the secondary side control pressure. If reproducibility with stable responsiveness is required, install a regulator in the preceding stage.

■ Take the following countermeasures to prevent malfunction caused by noise.
- Install a line filter in the AC power supply line.
- Use a surge suppressor such as a CR or diode on the inductive load (solenoid valve, relay, etc.) and remove noise from the source.
- Keep wiring to devices separate from strong magnetic fields.
- Connect wiring to proportional pressure controls with a shield wire.
- Ground the shield wire on the power supply side. Note that the shielding wire for the serial transmission communication cable must be treated based on communication system specifications.

■ When releasing the secondary control pressure, such as air blowing, into the atmosphere, the pressure could fluctuate depending on the piping and flow conditions. Test under actual working conditions, or contact CKD before using this method.

■ When selecting the dryer, air filter, oil mist filter or regulator, select a device with a flow rate higher than that used by proportional pressure controls.

■ This product has moving parts due to its operation and structure, the accuracy, etc., of which can change over time. Before use, evaluate the part in the system. Depending on the operation frequency, use this product as a periodic maintenance part, etc.

■ Working conditions for CE compliance
CKD electro pneumatic regulators (EVD, EVR, EV, EVS2 and MEVT Series) conform to the EMC Directive and CE standard. The standard for the immunity for industrial environments applied to this product is EN61000-6-2; the following requirements must be satisfied in order to conform to this standard:
Conditions
- The evaluation of this product is performed by using a cable that has a power supply line and a signal line, paired to assess the product's performance.
- This product is not equipped with surge protection. Implement surge protection measures on the system side.

Mounting, installation and adjustment

⚠ CAUTION

■ Do not use the product where the product is exposed to direct sunlight or may come in contact with water, oil, etc.

■ Sufficiently flush the piping with air before connecting to proportional pressure controls. Prevent pipe from catching on parts of the sealing tape when piping.

■ Mount the product as indicated in the product-specific cautions.

■ When connecting pipes, wrap sealing tape in the opposite direction to the threading, from the inside position to within 2 mm from the pipe end.

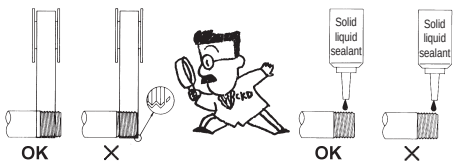

- If sealing tape protrudes from the pipe threads, it could be cut when screwing the bolts in. This could cause the tape to enter the pneumatic components, causing failures.

■ Correct pressure control is not possible if the exhaust port is plugged. Release this port to the atmosphere. ■ Use appropriate torque to tighten the pipes when connecting them.
- The purpose is to prevent air leakage and damage to bolts.
- First tighten the bolts by hand to ensure that the threads are not damaged, then use a tool.

[Recommended tightening torque]

Port thread	Tightening torque N·m
M5	1 to 1.5
Rc1/4	6 to 8
Rc3/8	13 to 15



■ Tighten with an appropriate torque when using CKD cable option M12 connector. Recommended tightening torque: 0.4 to 0.49 N·m

Use/maintenance

⚠ CAUTION

■ Do not disassemble the product. Doing so may cause product failure. Operation after disassembly cannot be guaranteed.

■ Do not use with the cover and housing removed.
- An electronic circuit board is assembled inside. Using the product with the cover or housing removed could result in unexpected accidents or trouble.

Product-specific cautions: EVD Series

Design/selection

⚠ WARNING

■ Understand the characteristics of compressed air before designing a pneumatic circuit.
- The same functions as mechanical, hydraulic, and electrical methods cannot be anticipated.
- The product cannot be used for immediate stopping and holding in case of emergency stop.
- Pop-out, air discharge, or leakage due to air compression and expansion may occur.
- Design the circuit so that compressed air in the system is exhausted.

■ Confirm before use that the product will withstand the working environment.
- This product cannot be used in an atmosphere containing corrosive gas, chemical liquids, solvents, water or steam. If water, oil, or metal chips (spatter or cutting chips, etc.) could come in contact with the product, provide appropriate protection.
- A gauge pressure sensor is built in. To protect the sensor, do not seal the product, and make sure that air can be introduced.
- This product cannot be used in an explosive gas atmosphere. ■ Pay attention to the electric circuit during emergency stop and to the cylinder operation during power outages.

■ Install a “pressure switch” and “residual pressure exhaust valve” on the device’s compressed air supply side.
- The pressure switch will disable operation until the set pressure is reached. The residual pressure exhaust valve releases compressed air into the pneumatic pressure circuit to prevent accidents caused by operation of pneumatic components under residual pressure.

■ If the regulator is left with the power OFF and the primary pressure applied, the secondary pressure could rise to the primary pressure level. Due to the structure, a small amount of air is consumed from the EXH port when the secondary pressure is generated.
Set the primary regulator to 0 or use a valve on the primary side to shut off the supply source when not using the regulator.

⚠ CAUTION

■ Indicate the maintenance conditions in the device’s instruction manual.
- The product’s performance may drop too low to maintain an appropriate safety level depending on usage conditions, working environment and maintenance status. With correct maintenance, the product functions can be used to the fullest.
  1. Control of supplied compressed air pressure
  2. Control of pneumatic filter
  3. Control of compressed air leakage at piping connections
  4. Operational status control
  5. Control of current consumption

■ Use a constant voltage power supply.

■ Check for leakage current to avoid malfunction caused by leakage current from other fluid control components.
- When using a programmable controller, etc., leakage current may affect the electro pneumatic regulator and cause malfunction.

24 VDC	1.8 mA or less

■ Response is affected by working pressure and load volume. If reproducibility with stable response time is required, install a regulator in the proceeding stage.

■ Take the following countermeasures to prevent malfunction caused by noise.
- Install a line filter in the AC power supply line.
- Use a surge suppressor such as a CR or diode on the inductive load (solenoid valve, relay, etc.) and remove noise from the source.
- Keep wiring to device separate from strong magnetic fields.
- Connect wiring to device with a shield wire.
- Ground the shield wire on the power supply side.
- Keep the power supply cable as short as possible.
- Do not share power with an inverter or components causing motor noise, etc.
- Do not lay the power wire, signal wire, and other power cables in parallel.

■ When the current input is wired, the power ground and signal common are shared.
- When driving several electro pneumatic regulators with one PLC and D/A unit, depending on the D/A unit circuit, wiring could prevent the correct signal from being input. Contact the PLC manufacturer.

■ The current input can be used with an input signal of 1 to 5 V. However, because input impedance is small (250 Ω) when compared to other voltage input, use an appropriate voltage generator.

■ Poor air quality will cause poor characteristics and adversely affect the durability.

■ Use clean dry air of JIS B 8392-1:2012 (ISO 8573-1: 2010) [1:3:2] or equivalent.
- For the pneumatic source, always supply clean air, from which solids, moisture and oils have been sufficiently removed with a dryer, air filter and oil mist filter.
  Do not use lubricated air as it will adversely affect the characteristics.

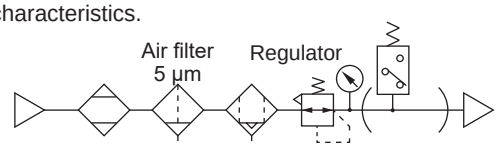

[Recommended air circuit]

- When the secondary pressure is lowered with an input signal, etc., the secondary air passes through the product and is discharged from the EXH port. Contamination on the secondary piping and on the inside of the load will have an adverse effect on the characteristics, etc., Thus, keep the inside of the piping as clean as possible.

■ If power is turned OFF under pressure, secondary pressure is held.
- To discharge pressure, lower set pressure with an input signal and then turn OFF, or use a residual pressure exhaust valve, etc. This holding state is not guaranteed for extended periods of time.

Design/selection

⚠CAUTION

■Primary pressure:
- For 100 kPa pressure specifications, make sure that the pressure is not less than “set pressure + 50 kPa”.
- For 500/900 kPa pressure specifications, make sure that the pressure is not less than the “set pressure + 100 kPa”.
- Product life is shortened if primary pressure is not supplied for a long period while power is ON. Do not use this way.

■When releasing the secondary control pressure, such as air blowing, into the atmosphere, the pressure could fluctuate depending on the piping and flow conditions. Test under actual working conditions, or contact CKD before using this method.

■When selecting the dryer, air filter, oil mist filter or regulator, select a device with a flow rate higher than that used by proportional pressure controls.

■Working environment

Do not use the product where the product is exposed to direct sunlight or may come in contact with water, oil, etc.The product cannot be used with large temperature variations or high temperature/humidity since condensation may occur inside the body.Consult with CKD on specifications for use outside the designated specifications or for special applications.

■Drip-proof environment

The degree of protection of this product is equivalent to IP40. Do not install this product where water, salt, dust, or swarf is present or in a pressurized or depressurized environment. The product cannot be used with large temperature variations or high temperature/humidity since condensation may occur inside the body.

■Apply a signal to offset the residual pressure (1% F.S. or equivalent) in the waiting status where the input signal is set to 0 kPa. If an offset signal is not applied, unnecessary operation of the solenoid valve will occur, resulting in shorter service life. ■ Even when pressure is set to 0 kPa at 1% F.S. or less of max. control pressure, secondary pressure is not completely released. If precise 0 kPa is required, bleed the secondary side or install a 3-way valve on the secondary side to switch the secondary side to atmospheric pressure.

■EVD-1000The processing performance of flow rate is intended for small control targets. If pressure rises and falls frequently with large secondary side load capacity or with long piping to the control target, reducing the pressure will take a long time and the service life may become shorter since load is applied to the diaphragm and other exhaust side components. In these applications, use EVD-3000 Series with higher supply and exhaust port performance.

■Matters related to UL

Note the following when using this product in compliance with UL/ULc standards.
- Temperature rating Max 50°C
- Use Class2 power supply.

UL File No.	UL Standard	Description
E339318	UL 508	Industrial Control Equipment

Mounting, installation and adjustment

⚠DANGER

Installation

■Use power supply voltage and output within the specified voltage. Using voltage that exceeds the specified voltage could cause malfunctions, controller damage, electrical shock, or fire. Do not use any load that exceeds the rated output. Otherwise, output damage or fire may result.

⚠WARNING

Wiring

■Check the connector pin and cable core wire color when wiring. Incorrect connections could cause damage, failures, or malfunctions. Check the wire color against instructions and precautions before wiring.

■Ensure that wires are properly insulated.

Check that wires do not come into contact with other circuits, that no ground faults occur, and that the insulator between terminals is not defective. Overcurrent could damage the product. ■Use a stabilized DC power supply within the specified rating that has been insulated from the AC power supply. A non-insulated power supply could result in electrical shock. If power is not stabilized, the peak value could exceed the rating and damage the product or reduce precision.

■Stop the controls and machine devices and turn power OFF before wiring. Starting operation suddenly could cause unpredictable and dangerous operation. Conduct an energized test with control devices and equipment stopped. Be sure to discharge any accumulated electrostatic charge among personnel, tools, or equipment before and during work. Connect and wire bending resistant material, such as robot wire material for movable sections.

■Do not use this product at levels exceeding the power supply voltage. Apply voltage exceeding specifications or AC power supply (100 VAC) may result in rupture or burning.

■Do not short-circuit the load. Failure to observe this could result in rupture or burning.

Mounting, installation and adjustment

⚠CAUTION
Installation

■ Mounting orientation
There are no restrictions to the mounting direction or mounting attitude, but provide sufficient space around the product for operation, mounting, removal, wiring and piping work.

■ Install a pneumatic filter just before the pneumatic components circuit.

■ Install so that the exhaust port is not blocked and provide sufficient space for exhaust. When mounting this product, do not use a mounting method that relies on support from the piping.

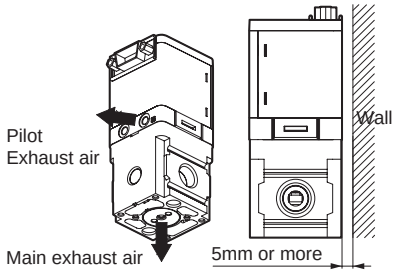

■ The D sub-connector's rotating mechanism is not designed for use in moving applications. Keep it facing upward or sideways (not obliquely) when using. If the cable may move, fix the cable or connector.

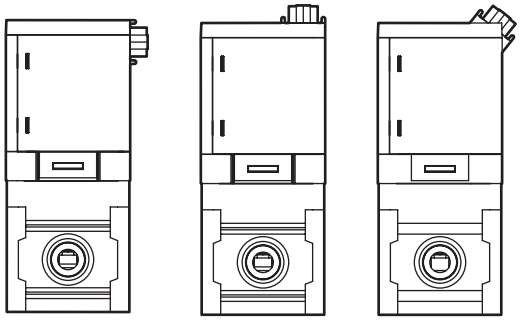

■ Depending on the piping and load conditions, the control pressure may not be stable and the product could repeatedly rise and fall in pressure. If that condition continues, the product life will be shortened, so be sure to review piping conditions, etc.

⚠CAUTION
Piping

■ Sufficiently the piping with air before connecting.
Also, make sure that sealing tape does not enter during piping.

■ When connecting pipes, wrap sealing tape in the opposite direction to the threading, from the inside position to within 2 mm from the pipe end.
● If sealing tape protrudes from the pipe threads, it could be cut when screwing the bolts in. This could cause the sealant tape to enter the pneumatic components, causing breakdowns.

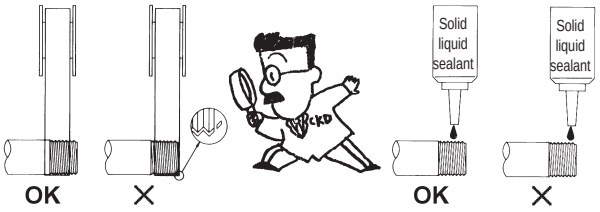

Wiring

■ The optional shield cable connector is a shielded wire.
● Insulate wires not being used so that they do not contact other wires, including shielded wires. Unintended connection to the ground, etc., could cause malfunction or damage to the product.

■ Insert and fit the D sub-connector securely on the back.

■ The D sub-connector has a 90˚ rotating mechanism. When fitting the D sub-connector, press it in by hand so that it faces the top or side.

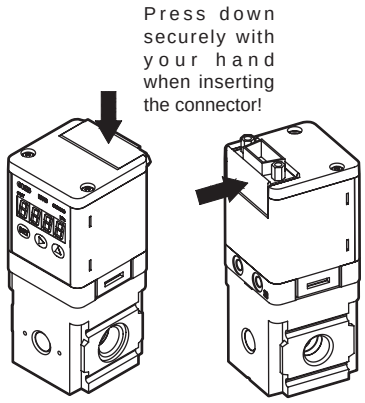

■ Correct pressure control is not possible if the exhaust port is plugged. Release this port to the atmosphere.

■ Tighten pipes with the appropriate torque.
● The purpose is to prevent air leakage and damage to bolts.
● First tighten the bolts by hand to ensure that the threads are not damaged, then use a tool.

■ The wiring part is mounted to the body with two hooks on the side of the housing. Be careful not to apply excessive force to the housing since doing so may cause the hooks to disengage and be damaged.

[Recommended tightening torque]

Port thread	Tightening torque N·m
Rc1/4	6 to 8
Rc3/8	13 to 15

Mounting, installation and adjustment

- When supplying compressed air after connecting pipes, do not suddenly apply high pressure.
- Before supplying compressed air after connecting pipes, check that there are no air leaks at any pipe connections.
  - Apply a leakage detection agent on pipe connections with a brush, and check for air leaks.
- Lock the D sub-connector so that it will not be dislocated. Before loosening the lock, fix the fixing block with a tool, etc.

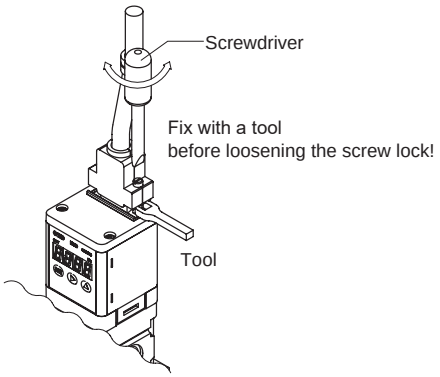

Use/maintenance

⚠ WARNING

- Do not supply anything other than compressed air.
- Use clean compressed air that does not contain corrosive gases.
- Use oil-free clean dry air of JIS B 8392-1:2012 (ISO 8573-1: 2010) [1:3:2] or equivalent.
- Before conducting maintenance, turn the power OFF, stop the supply of compressed air and make sure that there is no residual pressure.
  - Observe the conditions to ensure safety.

⚠ CAUTION

- Conduct daily inspections and regular inspections to ensure that maintenance control is done correctly.
  - If maintenance is not correctly managed, the product's functions could deteriorate markedly and lead to a shortened service life, faults and accidents.

1. Control of supplied compressed air pressure
   - Is the set pressure supplied? Does the pressure gauge indicate the set pressure while the equipment is operating?

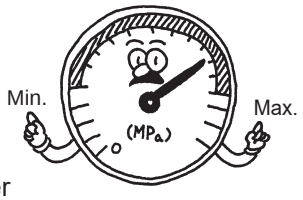

2. Control of pneumatics filter
   - Is the drain correctly discharged?
     Is the bowl or element clean enough to use?

3. Control of compressed air leaks from piping connections
   - Is the state of the connection, especially at movable sections, normal? Leakage in piping could cause incorrect operation.

4. Operational status control
   - Are operations delayed? Is exhaust normal?

5. Control of pneumatic actuator operation
   - Is operation smooth? Is the end stop state normal?
     Is coupling with the load normal?

- If abnormal operation occurs, turn power and pneumatic source OFF immediately and stop use.
- Use this product within the working pressure.
- Immediately after power is turned ON, this product does not start pressure control for approximately 2 seconds to complete self-diagnosis. Provide a control circuit/program that ignores signals for at least two seconds after power is turned ON.
- When changing the output set value, turn OFF the equipment first in order to prevent unexpected operation in the control system equipment.
- Regularly inspect the product at least once a year to check that it operates correctly.
  - This product uses a small solenoid valve as an actuator. The service life may change depending on the frequency of operation triggered by pressure switching, the working conditions, etc.
- The term of warranty is set as one year or 3,000,000 repeated operations, whichever is earlier, so use this as an inspection guideline.
  * The conditions for the 3,000,000 operations listed in the term of warranty are as follows. When repeatedly applying a stepped input signal which causes the control pressure to rise from zero to the maximum control pressure. The working air quality in this case shall be clean compressed air from the recommended air circuit. The secondary side load capacity shall be 300 cm^3.
- The case is made of resin. Do not use solvent, alcohol or detergent in cleaning, or resin could absorb it. There is a risk of affecting the resin. Wipe off dirt with a rag soaked in a diluted neutral detergent solution and wrung out well.

Product-specific cautions: EVR Series

Design/selection

⚠ WARNING

■ If the regulator is left with the power OFF and the primary pressure applied, the secondary pressure could rise to the primary pressure level. If this poses a safety hazard, take system safety measures using a valve on the primary side or secondary side, etc.

⚠ CAUTION

■ Poor air quality will worsen the characteristics and adversely affect the durability.

■ Use clean dry air of ISO 8573-1 Class 1.3.2 or JIS B 8392-1 Class 1.3.2 or equivalent.

● For the pneumatic source, always supply clean air, from which solids, moisture and oil have been sufficiently removed with a dryer, air filter and oil mist filter. Do not use lubricated air as it will adversely affect the characteristics.

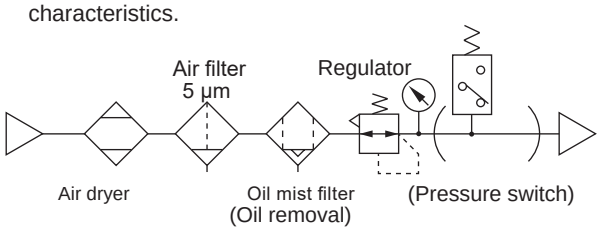

[Recommended air circuit]

● When secondary pressure is lowered with an input signal, etc., secondary air passes through the EV and is discharged from the exhaust port (EXH port). Contamination on the secondary piping and on the inside of the load will have an adverse effect on the characteristics, etc. Thus, keep the inside of the piping as clean as possible.

■ If power is turned OFF under pressure, secondary pressure is held.

● To discharge pressure, lower set pressure with an input signal and then turn OFF, or use a residual pressure exhaust valve, etc. The holding state guarantees long-term holdingIt is not something.

■ Primary pressure must be over “Setting secondary pressure + 0.05 MPa”.

● In particular, with the secondary side pressure set within a range up to 12%F.S., if the primary pressure is not supplied for long periods, the product service life will be shortened and its characteristics will deteriorateand avoid this type of usage.

■ Leaving the product non-pressurized with power and input signals applied could have adverse effects on the life and propertiesbe avoided.

■ The product cannot control 1% F.S. or less input signal.

● The exhaust port (EXH port) should be open to the atmosphere to discharge air.

■ Applying an input signal outside the specifications shown in the table below will cause unnecessary operation of the solenoid valve, resulting in a shorter service life and deteriorated performance. Keep the signal within the specifications.

0 - 10V type	0 to 5 V type	4 to 20mA type
Less than 0 V More than 10 V	Less than 0 V More than 5 V	Less than 4 mA Over 20 mA

■ Apply a signal to offset the residual pressure (5 kPa or equivalent) in the standby status where the input signal is set to 0 kPa. If an offset signal is not applied, unnecessary operation of the solenoid valve will occur, resulting in shorter service life.

■ When the current input type is wired, the power ground and signal common are shared.

● When operating several EV units with one PLC and D/A, depending on the D/A unit circuit, wiring could prevent the correct signal from being input. Contact the PLC manufacturer.

■ The current input type can be used with an input signal of 1-5VDC. However, because input impedance is small (250 Ω) when compared to other voltage input types, use an appropriate voltage generator.

■ Due to the structure of EVR, a small amount of air is consumed from the EXH port when the secondary pressure is generated.

■ EVR-2509 Series has IN1 and IN2 supply ports on the body right and left respectively. If the port is not used, be sure to plug it.

■ Drip-proof environment

Refer to the specifications of each product to check the degree of protection before use. You cannot use the product if it does not satisfy the requirements of your use environment.

Mounting, installation and adjustment

■ Mounting orientation
There are no restrictions to the mounting direction or orientation, but provide sufficient space for exhausting from the exhaust port.

Use/maintenance

⚠ CAUTION

■ Regularly inspect the product at least once a year to check that it operates correctly.
● This product uses a small solenoid valve as an actuator. The service life may change depending on the frequency of operation triggered by pressure switching, the working conditions, etc.

■ The term of warranty is set as one year or 3,000,000 repeated operations, whichever comes first, so use this as an inspection guideline.
* The conditions for the 3,000,000 operations listed in the term of warranty are as follows.
When the input signal which causes the set pressure to rise from zero to 50% of the max. control pressure is repeatedly applied in steps, the secondary side load capacity condition is 300 cm^3.

Product-specific cautions: EV210□V Series for vacuum control

Design/selection

⚠ WARNING

- If the product is left with working pressure (vacuum source pressure) applied when power is OFF, the degree of the secondary pressure of the vacuum could rise to the working pressure. If this poses a safety hazard, take system safety measures using a valve on the secondary side, etc.

⚠ CAUTION

- If poor quality air is supplied to the primary side (atmosphere side), characteristics could deteriorate and durability be adversely affected.
  - When using this product in a dusty environment, etc., remove dust with a filter.
  - As with the secondary side load, if piping or the inside of the load is contaminated, characteristics and durability could be adversely affected. Blow air piping with compressed air to remove foreign matter before connecting.
  - Install an air filter as shown in the recommended air circuit below if necessary.

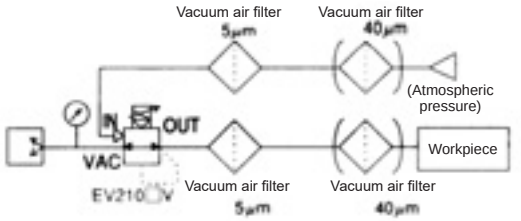

[Recommended air circuit]

- The secondary side pressure is maintained if power is turned OFF with the working pressure side in a vacuum state.
  - When releasing the secondary side to the atmosphere, lower the input signal and then turn the power OFF, or alternatively discharge the pressure with a residual pressure exhaust valve. This holding state is not guaranteed for extended periods of time.
- The working pressure is applied to supply the specified pressure for the control pressure. Ensure that the working pressure stays within the specified range.
  - If working pressure is not supplied for a long time when secondary pressure is set within more than 0 kPa to 12% F.S., or if the product is left for a long period with the working pressure at “control pressure + (- 10 kPa)” or less, the product life will be shortened. Avoid this type of usage.
- Set the input signal within the specifications.
  - Applying a signal exceeding the range could have adverse effects on the life and properties. Avoid this type of usage.
- The current input can be used with an input signal of 1 to 5 V. However, because input impedance is small (250 Ω) when compared to other voltage input, use an appropriate voltage generator.
- When the current input is wired, the power ground and signal common are shared.
  - When driving several EV units with one PLC and D/A unit, depending on the D/A unit circuit, wiring could prevent the correct signal from being input. Contact the PLC manufacturer.
- Apply a signal to offset the residual pressure (-5 kPa or equivalent) in the standby status where the input signal is set to 0 kPa. If an offset signal is not applied, unnecessary operation of the solenoid valve will occur, resulting in shorter service life.
- Even if pressure is set to 0 kPa, secondary pressure is not released and remains as is within 0 to -5 kPa range.
  - If 0 kPa is required, install a 3-way valve on the secondary side to switch to atmosphere, etc.

Use/maintenance

⚠ CAUTION

- Correct pressure control is not possible if the IN port is plugged. Release this port to the atmosphere. ■ When connecting a fitting to the piping port (VAC, OUT, IN), use seal material (sealing tape, gel sealant) to prevent leakage. Check that seal material or piping screw swarf does not enter the port. When tightening the VAC port fitting, hook a wrench on the intake block (□27).
- When using the manifold and connecting several units with a module connection, atmosphere release ports (IN1 and IN2) are shared.
- The optional shielded cable connector is a 4-conductor shield wire.
- When not using the green special application wire (analog output, etc.), insulate so that there is no contact with other wires (including shielded wires). Unintended connection to the ground, etc., could cause malfunction or damage the product. Also, the wiring must be kept away from noise sources such as intense electric fields. Otherwise an external induction noise added to the analog output will cause product damage.
- When using a hydraulic rotary vacuum pump, be sure to prevent oil from entering by breaking the vacuum with a residual pressure exhaust valve, etc., after the vacuum pump power is turned OFF.
- Regularly inspect the product at least once a year to check that it operates correctly.
  - This product uses a small solenoid valve as an actuator. The service life may change depending on the frequency of operation triggered by pressure switching, the working conditions, etc.
- The term of warranty is set as one year or 1,000,000 repeated operations, whichever comes first, so use this as an inspection guideline.
  - * The conditions for the 1,000,000 operations listed in the term of warranty are as follows.
    When repeatedly applying a stepped input signal which causes the control pressure to rise from zero to 90% of the maximum control pressure. The working air quality in this case shall be clean compressed air from the recommended air circuit. The secondary side load capacity shall be 300 cm^3.

Product-specific cautions: Thin electro pneumatic regulator MEVT Series

Design/selection

Circuit design

⚠ WARNING

■ Understand the characteristics of compressed air before designing a pneumatic circuit.
- The same functions as the mechanical, hydraulic, and electrical methods cannot be anticipated if instantaneous stopping and holding are required during an emergency stop.
- Pop-out, air discharge, or leakage due to air compression and expansion may occur.

■ Confirm before use that the product will withstand the working environment.
- This product cannot be used in an atmosphere containing corrosive gases, chemical liquids, solvents, water, vapor or ozone. If water, oil, or metal chips (spatter or cutting chips, etc.) could come in contact with the product, provide appropriate protection.
- This product cannot be used in an explosive gas atmosphere.

■ Pay attention to the electric circuit during emergency stop and to the cylinder operation during power outages.

■ Install a “pressure switch” and “residual pressure exhaust valve” on the device’s compressed air supply side.
- The pressure switch will disable operation until the set pressure is reached. The residual pressure exhaust valve releases compressed air into the pneumatic pressure circuit to prevent accidents caused by operation of pneumatic components under residual pressure.

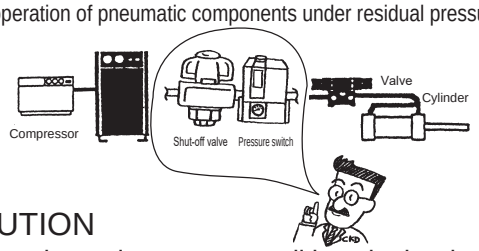

⚠ CAUTION

■ Indicate the maintenance conditions in the device’s instruction manual.
- The product’s performance may drop too low to maintain an appropriate safety level depending on usage conditions, working environment and maintenance status. With correct maintenance, the product functions can be used to the fullest.

■ Use a constant voltage power supply.

■ Set the input signal within the specifications.
- Applying a signal exceeding the range could have adverse effects on the life and properties. Avoid this type of usage.

■ Apply a signal to offset the residual pressure (EVT100: 2 kPa, EVT500: 10 kPa or equivalent) in the waiting status where the input signal is set to 0 MPa. If an offset signal is not applied, unnecessary operation of the solenoid valve will occur, resulting in shorter service life.

■ Check for leakage current to avoid malfunction caused by leakage current from other fluid control components.
When using a programmable controller, etc., leakage current could cause the EVT to malfunction.

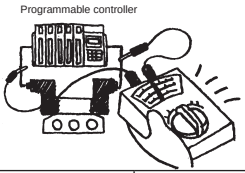

24 VDC	1.8 mA or less

■ Take the following countermeasures to prevent malfunction caused by noise.
- Insert a line filter in the AC power supply line.
- Use a surge suppressor, such as a CR or diode, on the inductive load (solenoid valve, relay, etc.), to remove noise from the source.
- Separate the wiring to the MEVT from electrical lines with strong current.
- Use the designated wire material for the serial transmission line.
- If operation may be affected by noise, wire the power supply independently for each manifold when possible.
- Keep the power supply cable as short as possible.
- Do not share power with an inverter or components causing motor noise, etc.
- Do not lay the power wire, signal wire, and other power cables in parallel.

■ Precautions for wiring
- When wiring the common terminal block and D sub-connector, the power supply gland and signal common are shared. When driving several EVT units with one PLC and D/A unit, depending on the D/A unit circuit, wiring could prevent the correct signal from being input. Contact the PLC manufacturer. When using a shielded wire, connect to the gland on the power supply side.

■ This regulator cannot be used with a cylinder having a large leakage rate, such as an air bearing cylinder.
- When using for blowing applications or when back pressure is applied on the secondary side, it is not possible to maintain the set pressure. A loud thrumming sound will be generated and service life will be shortened. Avoid this type of usage.

■ Residual pressure of 2 kPa or less (EVT100) or 10 kPa or less (EVT500) is generated even when the input signal is set to 0%. If 0 MPa is required, install a three-way valve on the secondary side or release into to the atmosphere, etc.

⚠ CAUTION

■ Install valves on the primary side and secondary side as necessary.
- If the regulator is left with the power OFF and the primary pressure applied, the secondary pressure could rise to the primary pressure level. If this poses a safety hazard, take system safety measures using a valve on the primary side or secondary side, etc.

■ Working environment
Do not use the product where the product is exposed to direct sunlight or may come in contact with water, oil, etc. Consult with CKD on specifications for use outside the designated specifications or for special applications.
- Ambient temperature
  · If used in an environment with a temperature higher than 50˚C or lower than 5˚C
- Vibration/impact
  · Do not use this product in an environment exposed to vibrations of 50 m/s^2 and over or impacts of 300 m/s^2 and over.

■ Pressure accuracy is affected by temperature characteristics and heat generated when energized. The more manifold stations there are, the greater the effect. Provide sufficient standby time (30 minutes or more after energizing) if you need to obtain a more stable pressure.

■ Drip-proof environments

The degree of protection of this product is equivalent to IP40. Do not install this product where water, salt, dust, or swarf is present or in a pressurized or depressurized environment. The product cannot be used with large temperature variations or high temperature/ humidity since condensation may occur inside the body.

■ Working conditions for CE compliance

MEVT conforms to the EMC Directive and CE standard. The standard for the immunity for industrial environments applied to this product is EN61000-6-2; the following requirements must be satisfied in order to conform to this standard:

Conditions

● Use a power cable shorter than 3 m.

Mounting, installation and adjustment

Installation

⚠WARNING

■ Do not install the MEVT by supporting it with pipes.
● Mount and fix the MEVT body.

■ Do not wash the MEVT with water or solvent, or paint the body.
● Otherwise some resin parts may be damaged.
Paint could plug the exhaust port and result in malfunctions.

⚠CAUTION

■ Secure sufficient space around the MEVT for installation, removal, wiring, and piping work.

■ Install a pneumatic filter just before the pneumatic component in the circuit.

■ Response is affected by working pressure and load volume. If reproducibility with stable response time is required, install a regulator in the preceding stage.

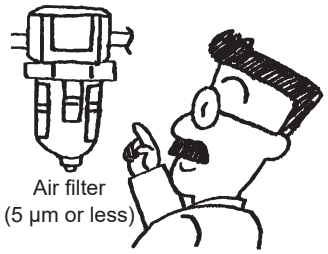

■ Mounting orientation
● The MEVT is mounted on a DIN rail. If the manifold's total weight exceeds 1 kg, or when using the MEVT in an environment with vibration or impact, fix the DIN rails on the mounting surface with a pitch of 50 to 100 mm. Check that there are no problems with installation.
● Although there is no restriction in mounting direction and orientation, attention should be paid to loose mounting screws caused by resonance due to vibration that may cause the manifold to fall off during operation.
● Mounting and removal method of MEVT
Removal:
Loosen the four DIN rail set screws (two each on the left and right).
Installation:
1. Engage the fingers with the DIN rail in order from (1) to (2).
2. Press the retainer in the direction of (3).
3. Hold down the blocks so that there is no gap between them and fix the DIN rail with the set screws. (recommended tightening torque 0.6 to 0.8 N·m).

Note: If the retainer fingers are not securely engaged, air could leak or the product could fall. Check that these fingers are secure.

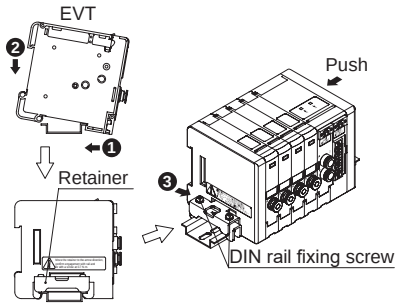

Piping

⚠CAUTION

■ Do not remove the MEVT packaging until just before piping.
● If the package is removed before connecting pipes, foreign matter could enter the EVT from the piping port and result in fault or malfunction.

■ Always flush just before piping pneumatic components.
● Any foreign matter that has entered during piping must not enter the EVT.



■ Connect piping so that connections are not dislocated by equipment movement, vibration, or tension.

■ The exhaust port (port R) should be open to the atmosphere to discharge air appropriately.

■ Do not narrow the EVT exhaust port (R) to a smaller one than the connected pipe port size.
Air may be taken in at the EVT exhaust port (R) due to valving element operation, causing foreign matter around the exhaust port (R) to enter the inside. Foreign matter may also enter when the exhaust port (R) is pointed upwards. Install a silencer and/or make the exhaust port (R) open downward.
● The actuator will not operate correctly if the exhaust air is not discharged smoothly. In the case of a manifold, exhaust air may prevent other EVTs' normal operation. ■ When supplying compressed air after connecting pipes, do not suddenly apply high pressure.
● The pipe connection could dislocate, causing the pipe tube to fly out, leading to accidents.
● CAUTION: If compressed air is supplied too slowly, sealing pressure may not be generated depending on the internal sealing mechanism of the EVT and may cause air leakage.

■ Before supplying compressed air after connecting pipes, check that there are no air leaks at any pipe connections.
- Apply a leakage detection agent on pipe connections with a brush, and check for air leaks.

■ Observe the following precautions when using nylon tubes or urethane tubes for piping material.
- Use flame-resistant tubes they could come in contact with spatter.

■ Piping connections
- Compatible tube

Use a CKD specified tube.
Soft nylon (F-1500 Series)
Urethane (U-9500 Series)
When using a commercially available tube, check external dimension accuracy, thickness, and hardness. Use an urethane tube with a hardness of 93˚ or more (rubber hardness scale). If a tube that does not satisfy the diameter accuracy or hardness is used, the chucking force may decrease or the tube may come off or be difficult to insert.

Tube dimensions

O.D. mm	I.D. mm	
	Nylon	Urethane
ø4	ø2.5	ø2
ø6	ø4	ø4

Tolerance of outer diameter

Soft/hard nylon	±0.1 mm
Urethane ø4, ø6	+0.1 mm -0.15 mm

- Bending radius of tube

The tube's bending radius must be larger than the min. bending radius. (Otherwise, dislocation or leakage could result)

Bore size	Min. bending radius mm	
	Nylon	Urethane
ø4	10	10
ø6	20	20

- Min. tube length

As a guideline, the output port (A) tube length should have a capacity of 1 cc and over.
(Otherwise, vibration may result.)

Bore size	Min. length mm	
	Nylon	Urethane
ø4	200	320
ø6	80	80

- Cutting the tube

Use a tube knife (AZ-1200), and cut at a right angle to the axis. Air could leak if a tube cut diagonally is inserted.
- Tube connection state

From the end of the fitting, provide a straight section that is as long as the O.D. of the tube being used, and avoid sudden bends in the piping at the fitting insertion port. Check that the tube's tensile strength in the lateral direction does not exceed 40 N.
- Compatible blanking plug

Use a CKD specified blanking plug.
Blanking plug GWP□-B Series

Use/maintenance

Air Quality

⚠WARNING

■ Do not supply anything other than compressed air.

■ Use clean compressed air that does not contain corrosive gases.

■ Use clean dry air of JIS B 8392-1:2012 (ISO 8573-1: 2010) [1:3:2] or equivalent.

⚠CAUTION

■ Poor air quality will worsen the characteristics and adversely affect the durability.
- For the pneumatic source, always supply clean air, from which solids, moisture and oil have been sufficiently removed with air dryer, filter and oil mist filter.

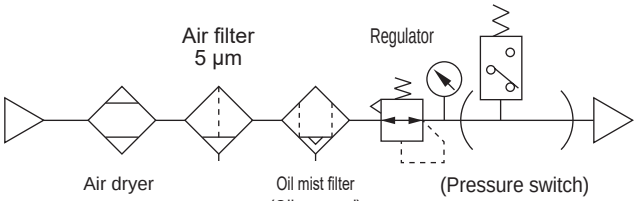

[Recommended air circuit]

- If the secondary side pressure is reduced, air on the secondary side will pass through the EVT interior and exit from the exhaust port (R). Contamination on the secondary piping and on the inside of the load will have an adverse effect on the characteristics, etc., Thus, keep the inside of the piping as clean as possible.
- Pneumatic components must be disassembled and assembled by qualified personnel.
Personnel involved in this step must have passed the Pneumatic Pressure Skill Test Class 2 or higher.
- Read the relevant product instruction manual thoroughly and fully familiarize yourself with the task before disassembling or assembling the pneumatic components.

Use/maintenance

⚠WARNING

■ Before conducting maintenance, turn the power OFF, stop the supply of compressed air and make sure that there is no residual pressure.
- Observe the conditions to ensure safety.

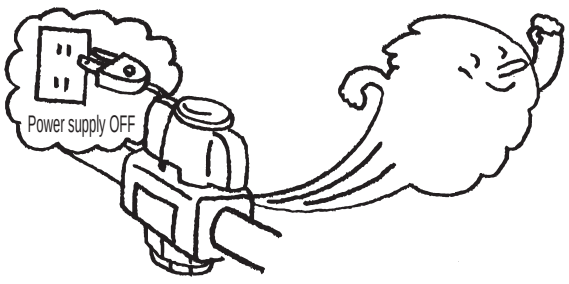

⚠CAUTION

■ To ensure that maintenance control is done correctly, conduct daily inspections and regular inspections.

● If maintenance is not correctly managed, the product's functions could deteriorate markedly and lead to a shortened service life, faults and accidents.

1. Control of supplied compressed air pressure

● Is the set pressure supplied? Does the pressure gauge indicate the set pressure while the equipment is operating?

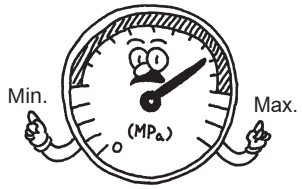

2. Control of pneumatics filter

● Is the drain correctly discharged?
Is the bowl or element clean enough to use?

3. Control of compressed air leaks from piping connections

● Is the state of the connection, especially at movable sections, normal?

4. EVT Operational status control

Are operations delayed? Is exhaust normal?

5. Control of pneumatic actuator operation

● Is operation smooth? Is the end stop state normal?
Is coupling with the load normal?

■ Regularly inspect the product at least once a year to check that it operates correctly.

● This product uses a small solenoid valve as an actuator. The service life may change depending on the frequency of operation triggered by pressure switching, the working conditions, etc.
The term of warranty is set as one year or 3,000,000 repeated operations, whichever comes first, so use this as an inspection guideline.

* The conditions for the 3,000,000 operations listed in the term of warranty are as follows.
When repeatedly applying a stepped input signal which causes the control pressure to rise from zero to the maximum control pressure. The working air quality in this case shall be clean compressed air from the recommended air circuit. The secondary side load capacity shall be 15cm³.

Others

⚠CAUTION

■ Do not disassemble the product. Doing so may cause product failure.
Operation after disassembly cannot be guaranteed.

■ If power is turned OFF under pressure, control pressure is held.
To discharge pressure, lower set pressure and turn power OFF, or use a residual pressure exhaust valve, etc. This holding state is not guaranteed for a long periods.

■ Check that supply pressure does not drop to less than the "Setting secondary pressure + max. control pressure x 0.1".
If primary side supply pressure is not supplied for long periods and when the secondary side control pressure is set greater than 0 MPa to 12% F.S., a loud thrumming sound will be generated and service life will be shortened. Avoid this type of usage.

■ When using the EVT Series, if there is leakage in the secondary piping, vibration could occur.
Securely pipe the system so that there is no leakage. Otherwise the set pressure cannot be maintained, causing a large buzzing noise and resulting in a shorter service life.

How to replace the cartridge fitting

⚠CAUTION

Check procedures before changing the push-in fitting size. If installed incorrectly, air leakage could occur.

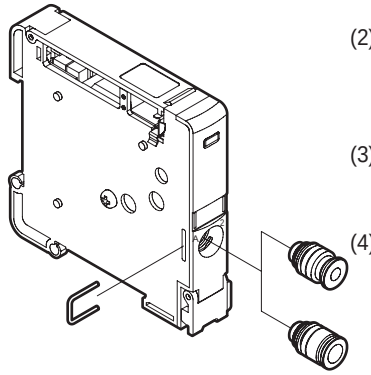

(1) Remove the stopper pin with a screwdriver.
(2) Remove the fitting.
* Check that the filter is not removed when replacing the fitting.
(3) Insert the replacement fitting vertically to the end.
(4) Insert the stopper pin. Pull on the fitting to confirm that it is properly installed.

Model No. of cartridge push-in fitting

Model	Part name	Model No.
EVT	ø4 straight	4G1-JOINT-C4
	ø6 straight	4G1-JOINT-C6

Product-specific cautions: EVS2 Series

Design/selection

⚠CAUTION

■ Poor air quality will worsen the characteristics and adversely affect the durability.

● The pneumatic source should use clean compressed air obtained by removing solid particles, moisture and oil from the fluid using air dryers, filters and oil mist filters.
(JIS B8392-1: 2012 (ISO 8573-1: 2010) [1:3:2])

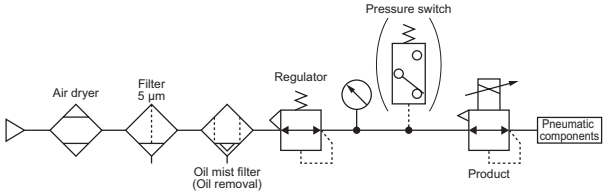

If the control pressure is reduced, air on the secondary side will pass through inside the product and exit from the exhaust port (port R). Contamination on the secondary piping and on the inside of the load will have an adverse effect on the characteristics, etc. Thus, keep the inside of the piping as clean as possible.

■ If the regulator is left with the power OFF and the primary pressure applied, the secondary pressure could rise to the primary pressure level. If this poses a safety hazard, take system safety measures using a valve on the primary side or secondary side, etc.

■ If power is turned OFF under pressure, control pressure is held.

● To discharge pressure, lower set pressure and turn power OFF, or use a residual pressure exhaust valve, etc. This holding state is not guaranteed for extended periods of time.

■ The working pressure is applied to supply the specified pressure for the control pressure. Ensure that the working pressure stays within the specified range.

● Especially when the control pressure has been set to from 0% F.S. to 12% F.S. and the working pressure is not supplied. If the working pressure becomes near or lower than the control pressure, unnecessary operation of the solenoid valve will occur resulting in a shorter service life.

■ Control of this product will not be possible if the input signal range is only set from 0% F.S. to 1% F.S.

■ Applying an input signal outside the specifications will cause unnecessary operation of the solenoid valve, resulting in shorter service life and deteriorated performance. Keep the signal within the specifications.

Mounting, installation and adjustment

⚠CAUTION

FF The exhaust port (port R) should be open to the atmosphere to discharge air.

■ Min. tube length

As a guideline, the output port (A) pipe length should have a capacity of 1 cc and over. (Failure to do so could result in vibration)

(For reference) Tube size ø4: Min. 320 mm
Tube size ø6: Min. 80 mm

■ Do not use the product if there is leakage on the secondary side, the secondary side is open for blowing, or the secondary side is open to the atmosphere. Otherwise the set pressure cannot be maintained, causing a loud buzzing noise and resulting in a shorter service life.

■ In the wiring of the product, the ground line of the power supply serves as the signal common line. When driving several EVS2 units with one PC and D/A unit, depending on the D/A unit circuit, wiring could prevent the correct signal from being output. Consult with the PC manufacturer.

■ The optional shielded cable connector is a 4-conductor shield wire.

When not using the green wire (for analog output), insulate it to prevent it from contacting with other wires (including shielded wires).

Use/maintenance

⚠ CAUTION

■ The optional shielded cable connector is a 4-conductor shield wire.

■ When not using the green special wire (for monitor output, etc.) for the EVS2 Series, insulate it to prevent it from contacting other wires (including shielded wires). Unintended connection to the ground, etc., could cause malfunction or damage to the product.
Also, the wiring must be kept away from noise sources such as an intense electric fields. Otherwise an external induction noise added to the analog output will cause product damage.
- The shielded wire on the body of the EVS2 Series is connected to the green wire of the optional shielded cable connector. Connect the green wire and shielded wire to the ground line of the power supply.

■ When connecting the shielded cable connector, keep the cable body stable and fasten the cable fixing screw by hand. If the cable is not kept stable, the connector on the product body side will turn and may be damaged.

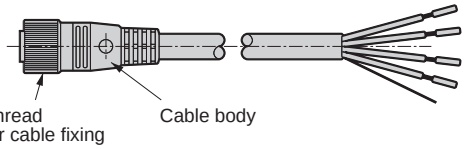

■ Regularly inspect the product at least once a year to check that it operates correctly.
- This product uses a small solenoid valve as an actuator. The service life may change depending on the frequency of operation triggered by pressure switching, the working conditions, etc.

■ The term of warranty is set as one year or 3,000,000 repeated operations, whichever comes first, so use this as an inspection guideline.
* The conditions for the 3,000,000 operations listed in the term of warranty are as follows. When repeatedly applying a stepped input signal which causes the control pressure to rise from zero to the maximum control pressure. The air quality must be clean compressed air from the recommended air circuit and the secondary side load capacity is to be 15 cm^3 for the EVS2 Series.

MEMO

ABP

Air booster

Refining and pressure adjusting components

Overview

The Air booster ABP is a component that enables air boosting by using only air pressure in combination with air tanks to raise the primary pressure two-fold (0.99 MPa max.) without the use of electricity. Energy and cost savings will be achieved in total manufacturing lines, since pressure can be increased at the required point in the plant only. An air tank and optional pressure gauge that can be directly connected to the air booster are also available. Use them together according to your needs.

Features

Up to twice the boosting pressure ratio (equiv.)
By using a piston for compression, the pressure adjusting knob can boost the primary pressure range up to two-fold (max. 0.99 MPa).

Flexible installation
Can also be installed vertically, as the mounting direction is flexible. Pipes can be connected from 3 directions.

Pressure adjustment without tools
Pressure adjustments can be made with one hand and locking performed with one push. Furthermore, knobs can be manually adjusted easily even for high pressure settings.

Compact
Short and compact body



CONTENTS

Series variation	675
Product introduction	676
● Air booster (ABP)	678
● Air tank (AT)	683
⚠ Safety precautions	684

●: Standard, ◎: Option

Model	Model No. JIS symbol	OUT port position			Option			Page
		Same side as IN port	Bottom side (Direct connection to air tank)	Back side of IN port	Pressure gauge	Silencer	Foot bracket	
		Blank	D	L	G	S	B	
Air booster	ABP 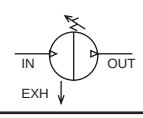	●	●	●	◎	◎	◎	678

Obtain twice as much high pressure air

ABP Air Booster that needs no electricity

Produce highly compressed air
up to twice the primary pressure (equivalent).

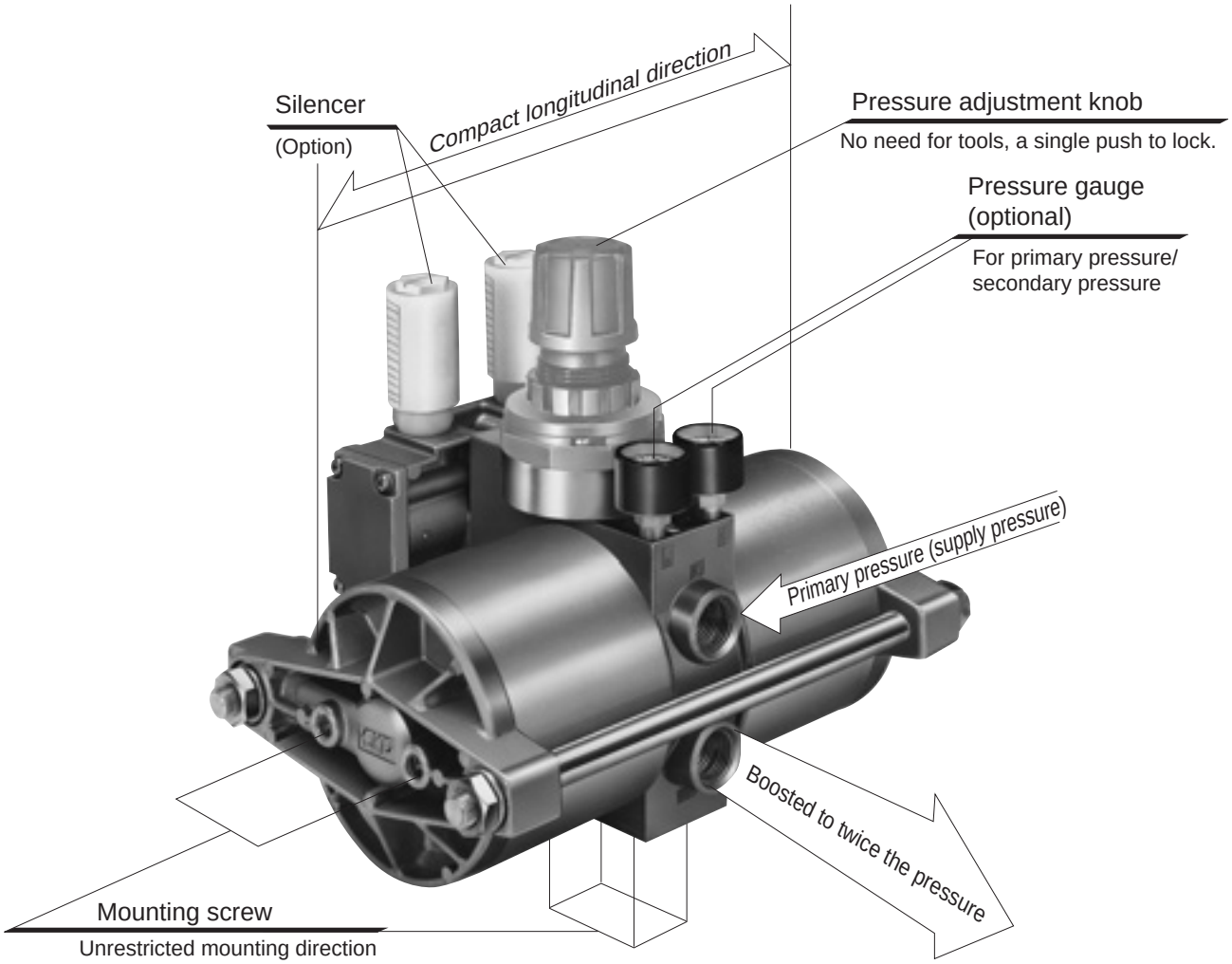

Compact design and flexible installation

⚠ Be sure to read the precautions on page 684 before use.

Plant-wide total cost reductions are possible.

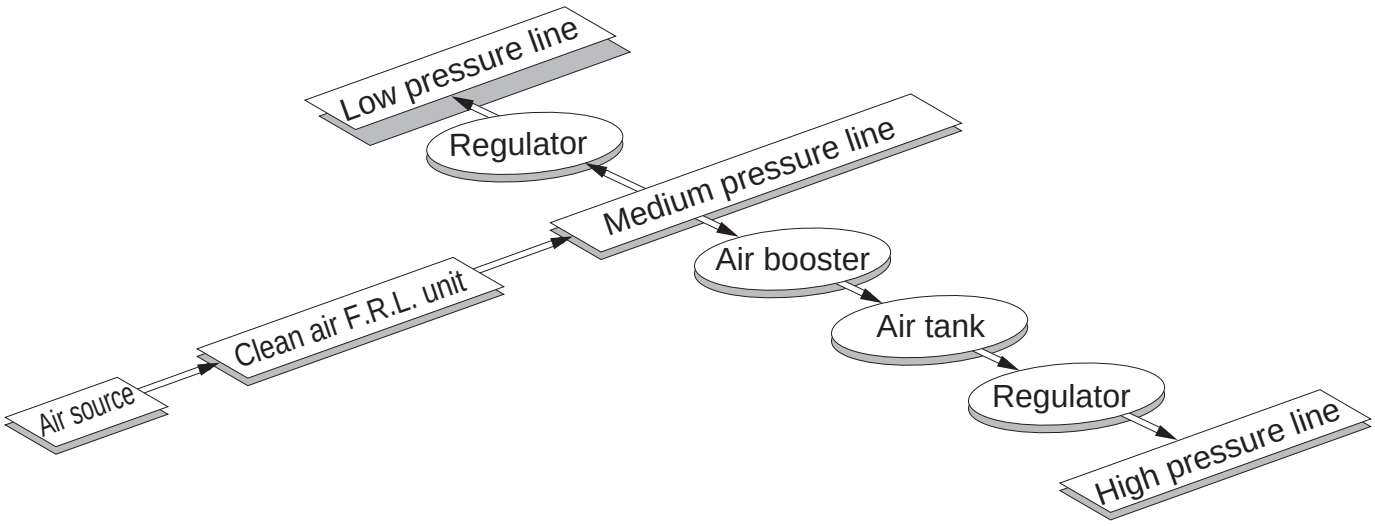

● Example of increased thrust in welding cylinder

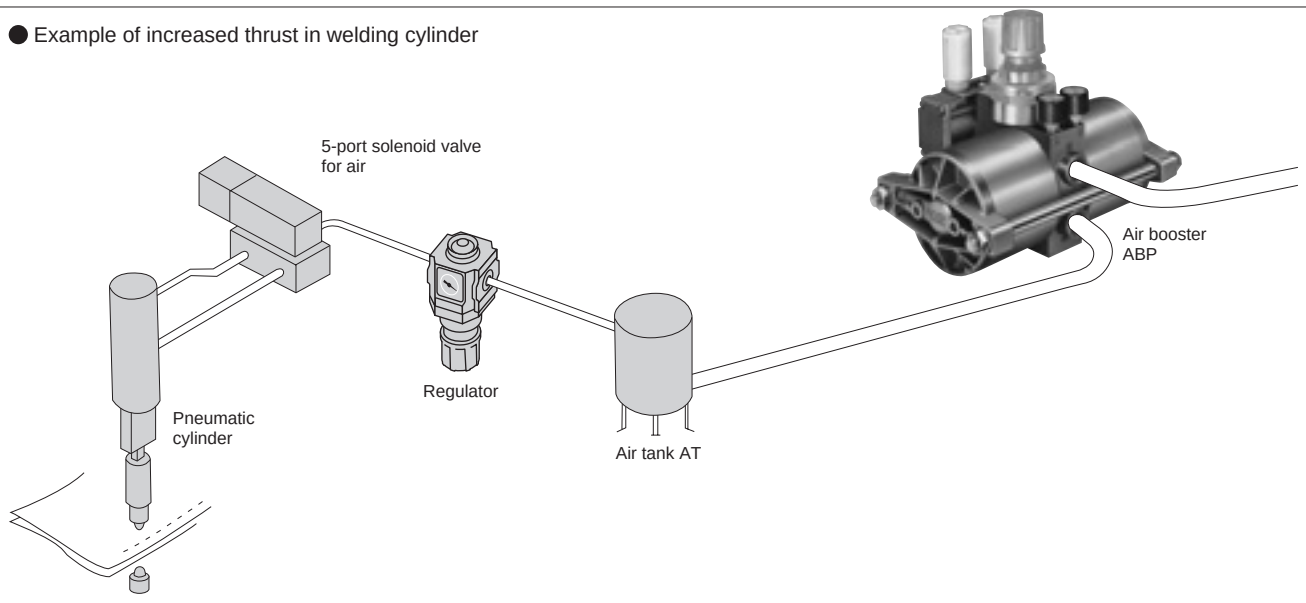

● Other applications

1. Reducing the footprint of the air cylinder.
2. Improving output capacity of driving components (air cylinder, air motor, etc.)
3. Quick filling of high-pressure air to air tanks
4. Boosting in explosion-proof atmospheres
5. Countering pressure changes in factory lines (fall in air pressure of lines, etc.)

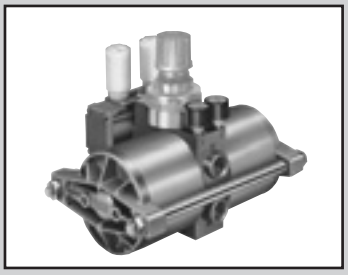

Air booster

ABP Series

JIS symbol

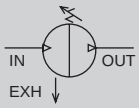

RoHS CAD

Functions

● Primary pressure flowing from IN passes through the check valve on the IN side, and flows into the booster chambers A and B. The primary pressure passes through the pressure adjustment section and switching valve, and flows into the driving chamber A. The piston moves to the left due to the pressure of the driving chamber A. Air in booster chamber A is compressed, passes through the check valve on the OUT side, and goes to the OUT side.

● When the piston reaches the stroke end, the changeover switch will be pushed, causing compressed air to be supplied to the switching valve pilot chamber and causing the switching valve to change over. Then the air in drive chamber A is exhausted, and the air is delivered to drive chamber B.

● Therefore, the piston moves to the right and air in booster chamber B is compressed, passes through the check valve at the OUT side and moves OUT.

● Boosting on the OUT side is compressed if the operations above are repeated. Feedback pressure is transmitted to the pressure adjustment section due to the OUT side pressure, and boosting is continued until the pressure adjustment spring pressure is balanced.

Specifications

1 MPa ≈ 145.0 psi, 1 MPa = 10 bar

Item	ABP
Working fluid	Compressed air
Max. working pressure MPa	0.99 (≈140 psi, 9.9 bar)
Min. working pressure MPa	0.2 (≈29 psi, 2 bar)
Set pressure MPa	From a primary pressure of +0.1 MPa to twice the primary pressure (max. 0.99 MPa)
Proof pressure MPa	1.5 (≈220 psi, 15 bar)
Flow rate m^3/min(ANR)	Refer to the flow characteristics in the graph on the right
Boosting ratio	Max. twice (or equivalent)
Ambient temperature °C	0 (32°F) to 50 (122°F) (no freezing)
Lubrication	Not required (use turbine oil class 1 ISO VG32 if necessary for lubrication)
Port size	Rc1/2
Weight kg	4.6
Durability	5 million (nominal)

How to order

ABP - 12 D - G

Air booster

Ⓐ OUT port position	
Blank	Same side as IN port
D	Bottom (direct connection to air tank)
L	Back side of IN port
Ⓑ Option	
G	Pressure gauge
S	Silencer
B	Foot bracket

Note) Option G (pressure gauge) is installed onto air booster at shipment. B (foot bracket) and S (silencer) are enclosed products.

● Internal air circuit diagram

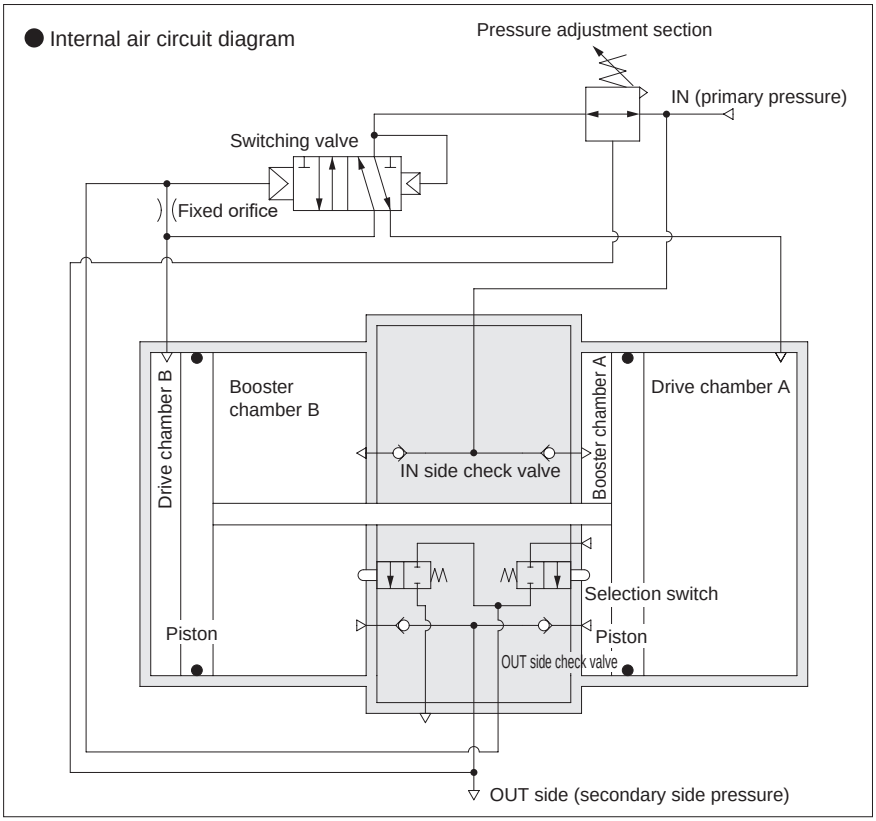

Flow characteristics (with AT-24 air tank, twice the pressure)

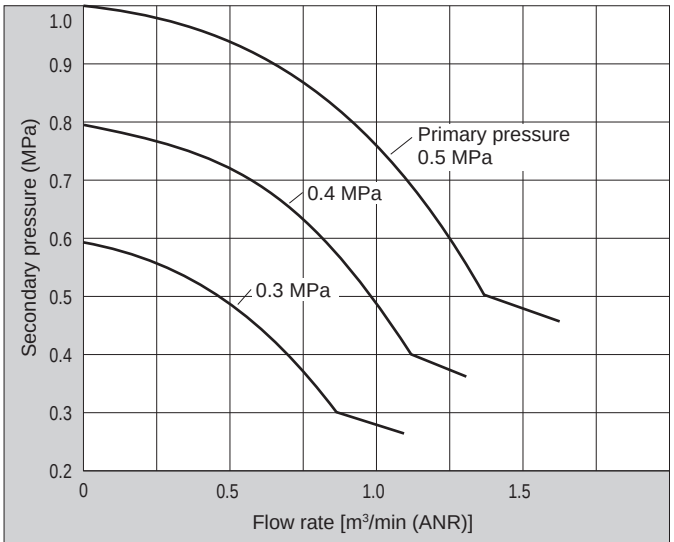

Flow characteristics show max. flow rate of air booster. If primary pressure is constant and secondary side flow rate is increased, max. secondary pressure decreases.

Pressure characteristics (Setting: 0.69 MPa primary pressure, 0.97 MPa secondary pressure, 0.02 m³/min ANR flow rate)

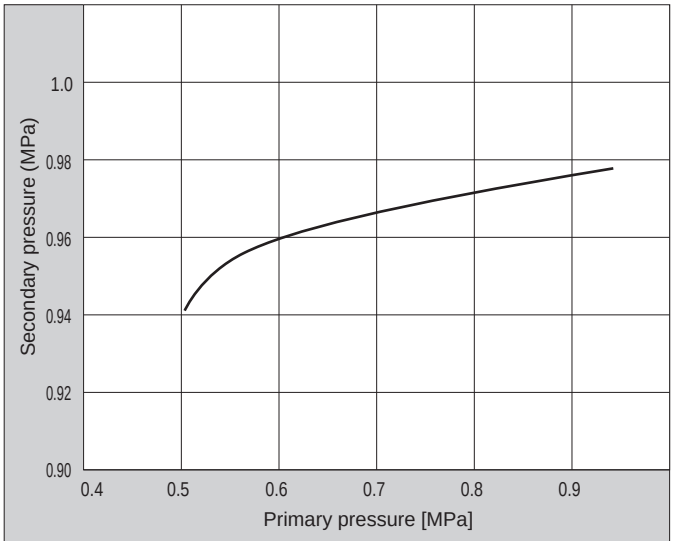

Pressure characteristics show variation of set secondary pressure according to primary pressure variation. If primary pressure decreases, secondary pressure decreases slightly.

Note) Air booster needs approx. twice secondary side flow rate (max.) for primary side due to structure.
Confirm that the instantaneous flow rate is within the curve.

Filling characteristics

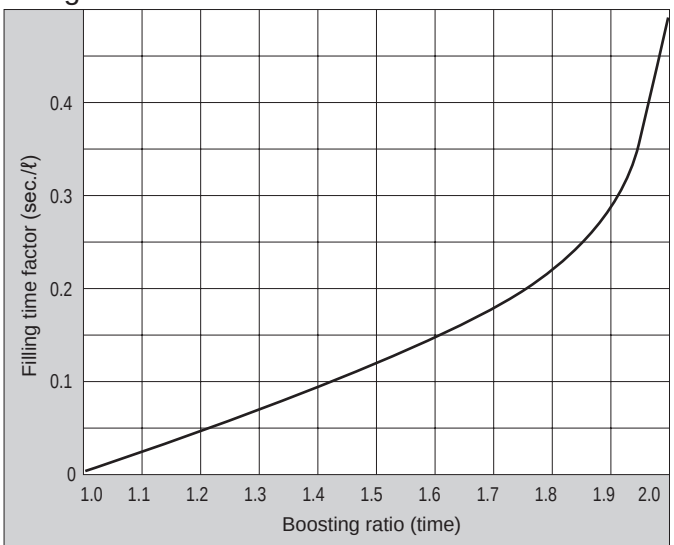

Filling characteristics show relations between boosting ratio and filling time, if tank etc., filled with compressed air.

Pulsation

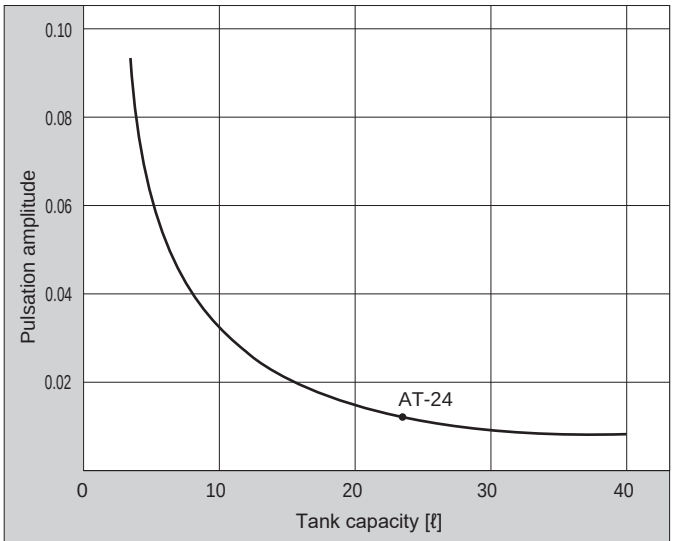

Pulsation shows width of pulsation if air tank is installed onto secondary side of air booster.

The time required to fill the tank with air can be calculated as follows. With the primary side pressure P_0, inner tank pressure before filling P_1, inner tank pressure after filling P_2, pre-filling ratio between primary side pressure and inner tank pressure k_1, and post-filling ratio between primary side pressure and inner tank pressure k_2, the formula will be $k_1 = \frac{P_1}{P_0}$, $k_2 = \frac{P_2}{P_0}$. Calculate k_1 and k_2, find the filling time factors t_1 and t_2 at the boosting ratio points k_1 and k_2 in the graph and substitute the values into $t = (t_2 - t_1) A$ to obtain the filling time t of the tank capacity A (ℓ).

Formula for air booster operational cycle

$$N = \frac{Qx10^3}{7.55P+0.76}$$

N: Operational cycle
Q: Required flow rate [m³/min (ANR)]
P: Primary side pressure [MPa]

Formula for air booster service life
Nominal life of operational cycle is 5 million times

$$T = \frac{5{,}000{,}000}{Nx60}$$

T: Service life (hours)

The characteristics above are typical examples, not guaranteed values.

Internal structure

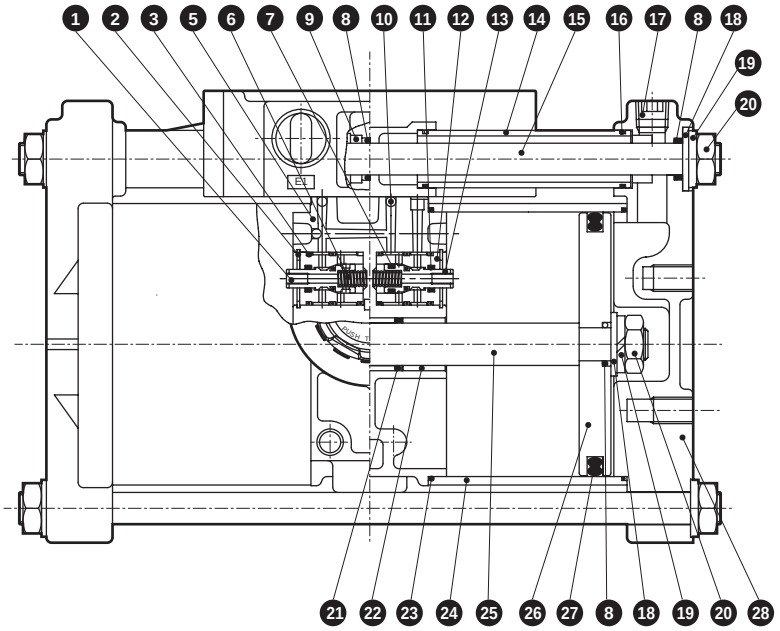

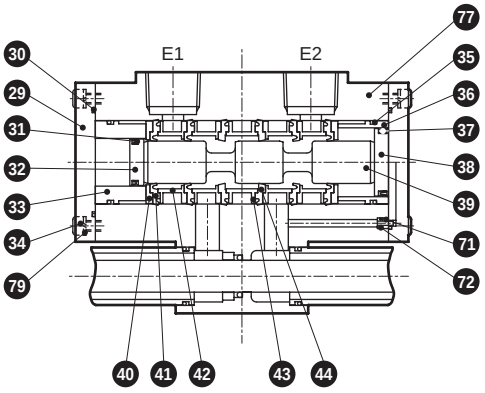

A-A cross section

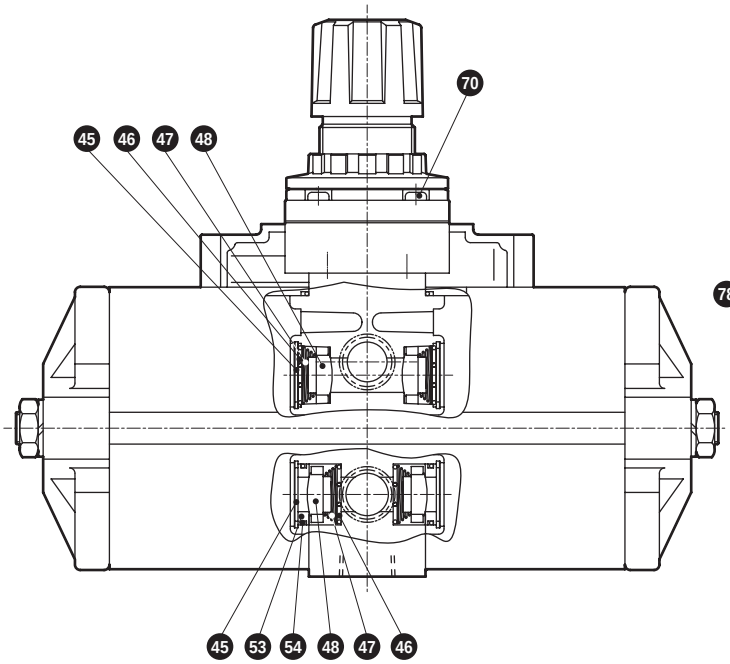

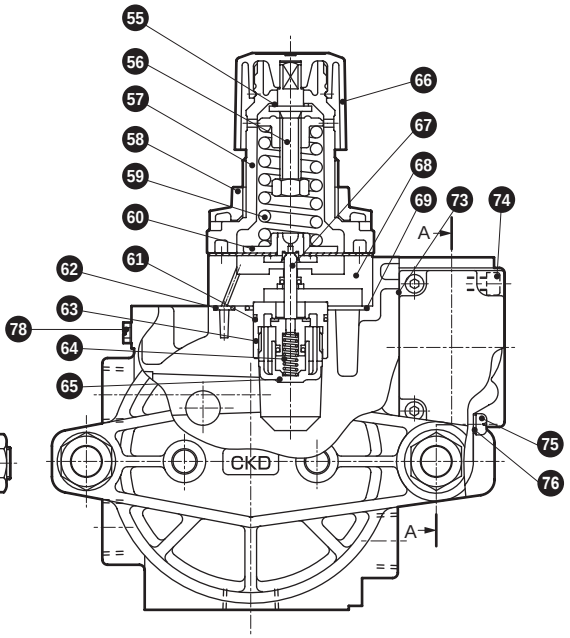

Parts list

No.	Part name	Material	Quantity	No.	Part name	Material	Quantity
1	Valve bar (A)	Stainless steel	1	41	Soft packing	Urethane rubber	4
2	C-snap ring for hole	Stainless steel	2	42	Spacer	Aluminum alloy	4
3	O-ring	Nitrile rubber	5	43	Spacer	Polyacetal resin	1
5	Body block assembly	Aluminum alloy	1	44	Soft packing	Urethane rubber	2
6	Spring	Stainless steel	2	45	C-snap ring for hole	Stainless steel	4
7	O-ring	Nitrile rubber	1	46	Spring seat	Stainless steel	4
8	O-ring	Nitrile rubber	5	47	Spring	Stainless steel	4
9	Spacer	Aluminum alloy	1	48	Check valve	Nitrile rubber	4
10	Steel ball	Steel	3	53	Valve seat	Aluminum alloy	2
11	Packing	Nitrile rubber	2	54	O-ring	Nitrile rubber	1
12	Detection valve body	Copper alloy	2	55	Slip ring	Polyacetal resin	4
13	Bar (B)	Stainless steel	1	56	Adjusting assembly		1
14	Pipe	Stainless steel	2	57	Cover	PBT resin	1
15	Tie rod	Steel	2	58	Mounting nut	Polyacetal resin	1
16	O-ring	Nitrile rubber	4	59	Adjusting spring	Steel	1
17	Hexagon socket head cap plug	Steel	2	60	Diaphragm assembly		1
18	Plain washer	Steel	4	61	O-ring	Nitrile rubber	1
19	Spring washer	Steel	6	62	O-ring	Nitrile rubber	1
20	Hexagon nut	Steel	6	63	Valve seat	Copper alloy	1
21	MY packing	Nitrile rubber	2	64	Bottom spring	Stainless steel	1
22	Rod metal	Oil impregnated bearing alloy	3	65	Stud	Polyacetal resin	1
23	O-ring	Nitrile rubber	4	66	Knob	Polyacetal resin	1
24	Cylinder tube	Aluminum alloy	2	67	Valve assembly		1
25	Piston rod	Steel	1	68	Regulator body assembly		1
26	Piston	Aluminum alloy	2	69	O-ring	Nitrile rubber	1
27	Piston packing	Nitrile rubber	2	70	Cross-recessed tapping screw	Steel	4
28	Head cover	Aluminum alloy	2	71	Fixed orifice	Copper alloy	1
29	Cap	Aluminum alloy	2	72	O-ring	Nitrile rubber	1
30	Gasket	Nitrile rubber	2	73	Master valve gasket	Nitrile rubber	1
31	Lip packing	Nitrile rubber	1	74	Hexagon socket head cap screw	Steel	2
32	Piston	Polyacetal resin	1	75	Cross-recessed pan head machine screw	Steel	1
33	Cylinder	Aluminum alloy	1	76	Gasket	Nitrile rubber	1
34	Hexagon socket head cap screw	Steel	8	77	Valve body	Aluminum alloy	1
35	O-ring	Nitrile rubber	2	78	Plug	Copper alloy	1
36	Cylinder	Aluminum alloy	1	79	Spring washer	Steel	8
37	Lip packing	Nitrile rubber	1				
38	Piston	Polyacetal resin	1				
39	Spool	Aluminum alloy	1				
40	Stopper	Polyacetal resin	2				

Single unit repair parts and options list

Part name	Model No.	Part No.	Remarks
Changeover switch packing set	ABP-K1	❶ x1, ❸ x5, ❻ x2, ⓫ x2, ⓬ x2, ⓭ x1, ❼ x1	
Cylinder packing set	ABP-K2	❽ x5, ⓰ x4, ㉑ x2, ㉓ x4, ㉗ x2	
Switching valve piston assembly	ABP-K3	㉛ x1, ㉜ x1, ㉞ x1, ㉟ x1	
Switching valve seal assembly	ABP-K4	㊵ x2, ㊶ x4, ㊷ x4, ㊸ x1, ㊹ x2	
Diaphragm assembly	ABP-K6	㊿ x1	
Pressure adjustment section valve assembly	ABP-K7	(61) x1, (62) x1, (67) x1, (69) x1	
Check valve assembly	ABP-K8	(48) x4, (53) x2, (54) x2	
Bracket	ABP-B		Qty per unit
Pressure gauge	ABP-GAUGE		Pressure gauge x 1
Silencer	SLW-15A		Silencer x 1

Dimensions

● ABP-12

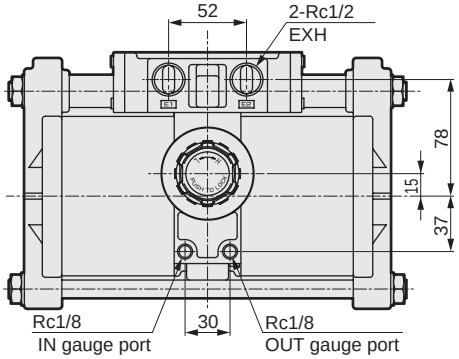

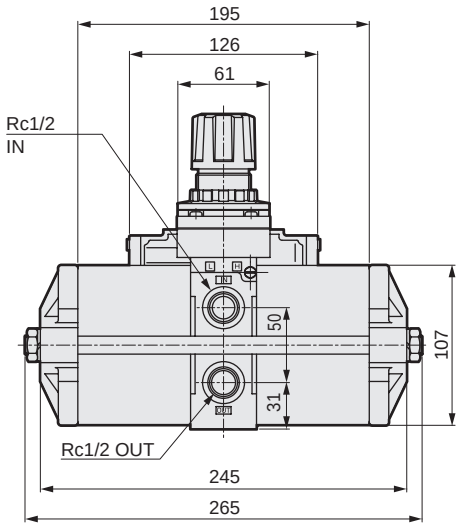

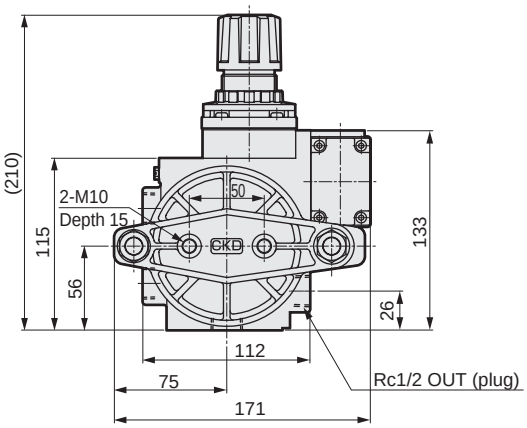

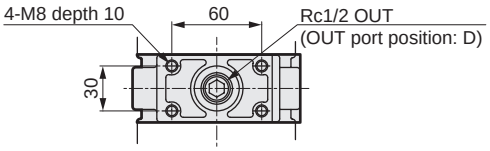

Optional dimensions

● When mounting the bracket (ABP-B)

Weight: 792 g (excluding ABP body and including bracket/bolt/spring washer)

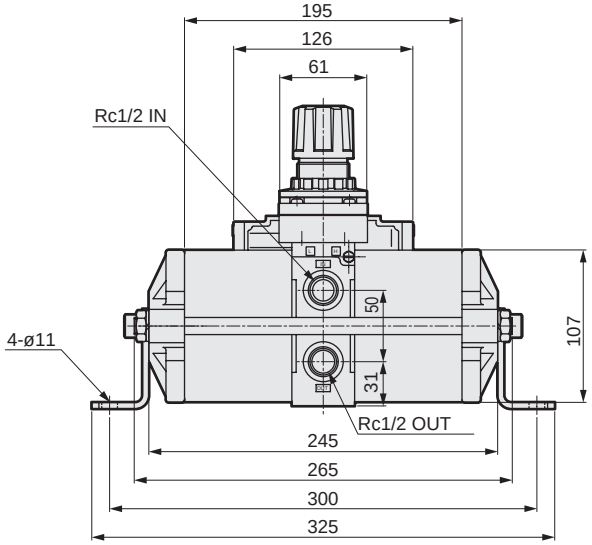

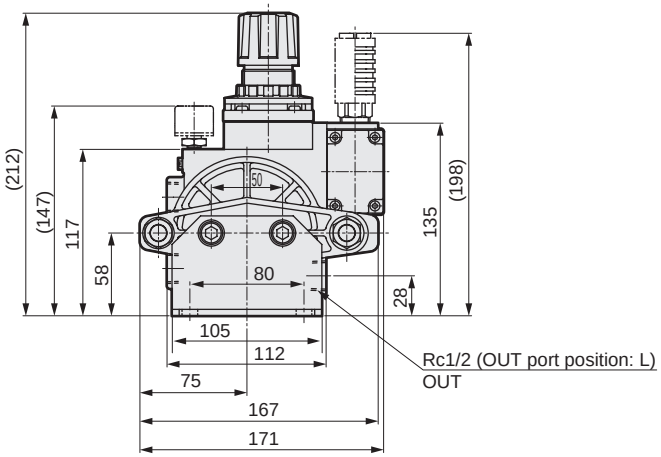

● Pressure gauge (ABP-GAUGE)

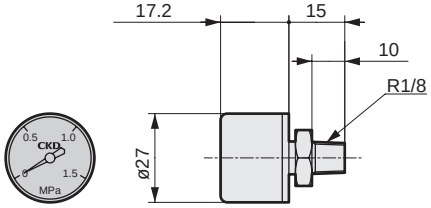

Weight: 32g

● Silencer (SLW-15A)

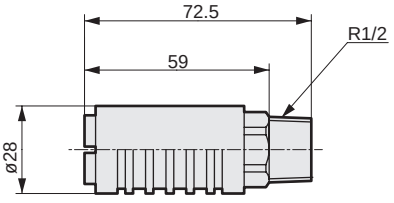

Weight: 21g



Air tank (related products)

AT Series

JIS symbol

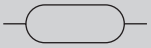

Features

Air tank directly connected to air booster ABP-12 with compact body.

Specifications

Item		AT
Working fluid		Compressed air
Max. working pressure	MPa	0.99 (≈140 psi, 9.9 bar)
Water pressure test pressure	MPa	1.5 (≈220 psi, 15 bar)
Ambient temperature	°C	0 (32°F) to 50 (122°F) (no freezing)
Internal capacity	m^3	0.024
Port size		Rc1/2
Material		Steel
Weight	kg	17.5

Note: O-ring, hexagon head bolt and spring washer are included for air booster mounting.

How to order

AT - 24

Air tank — Internal capacity

● Part model No.
AT-K1 (O-ring, hex head bolt, spring washer)

Dimensions

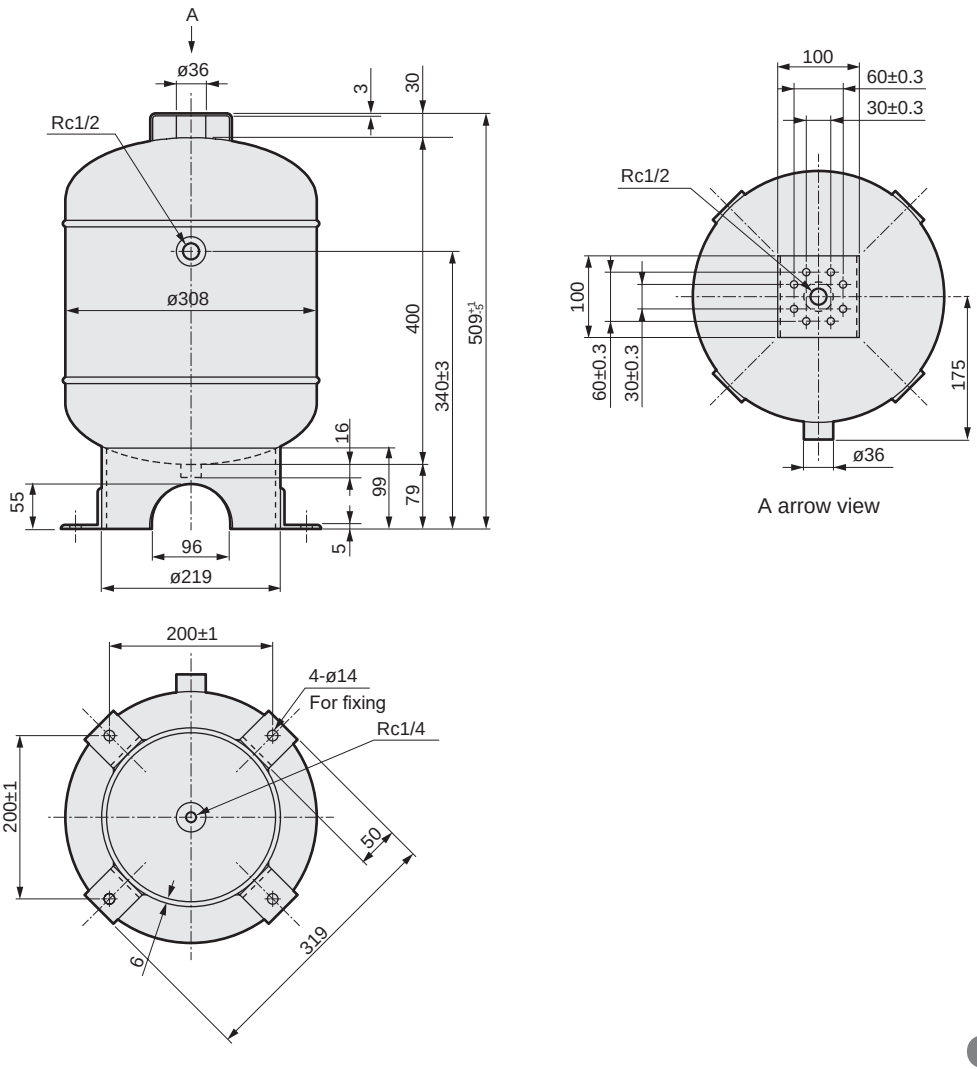

Pneumatic components

Safety Precautions

Be sure to read this section before use.
Refer to Intro Page 63 for general precautions.

Product-specific cautions: Air booster ABP Series

Design/selection

⚠WARNING

■ Do not use the air booster for continuous operation such as in a compressor.
The air booster is designed for partial boosting in the factory, etc. Life is shortened if used for high frequency continuous operation, such as in a compressor. (The air booster's nominal life is approximately 5,000,000 uses when used under normal conditions) Refer to page 679 for the estimated service life calculation.

⚠CAUTION

■ Do not use this product if vibration exceeds 50 m/s^2 or impact exceeds 300 m/s^2.

■ Pressure is raised by air pressure, so half of the air is discharged during boosting.
If the secondary side flow rate must be 1, the primary side requires a flow rate of 1 + 1 = 2.

■ Because the inside is cylindrical, a noise level of 60 to 80 dB (primary side 0.49 MPa and secondary side 0.95 MPa for measurement of 1 m) is generated during boosting.
* This is when a silencer is used.

■ When the air booster is not used, stop the primary pressure. Stop unnecessary operation and prevent air consumption.

■ AT-24 is an air tank made of steel sheets.
Periphery: Coating and interior surface are manganese phosphate treated, but in accordance with pressure vessel structure standards, the design tolerates some corrosion.
When clean air is required, install an oil mist filter, clean filter, etc., beyond AT-24.

Mounting, installation and adjustment

⚠WARNING

■ Do not supply pressure exceeding 0.99 MPa onto the primary side.

■ Check that set pressure does not exceed 0.99 MPa.

⚠CAUTION

■ Install a filter on the primary side to remove rust, foreign matter and drainage. The air booster compresses compressed air so drain is discharged easily from the secondary side. Installation of a filter is recommended to remove any moisture from the piping.

■ Install primary side piping at 1/2B or more to attain sufficient flow.

■ Install a silencer (SLW-15A, SL-15) or exhaust cleaner (FA430-15A) on the exhaust port of the air booster. When using the exhaust cleaner, common porting of the exhaust port is recommended.

■ Use piping with a stop valve at the air tank's drain port. Regularly discharge drain from the tank.

■ There are no set regulations regarding the air booster's mounting orientation: it should optimally be horizontally installed on a flat surface.

■ Install the air booster using 4-M8 depth 10 screw holes on the bottom or 2-M10 depth 15 screw holes on both sides. Only use these screw holes for installing the air booster.

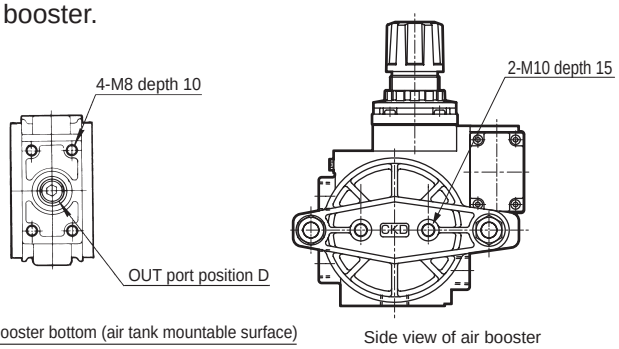

Air booster bottom (air tank mountable surface)

Side view of air booster

■ The bolt used to install the air booster must not exceed the screw hole depth.
Forcibly tightening a long bolt could damage the screw hole and cause air leakage.

■ A foot bracket installed on both ends is available as an option.
(Model No. ABP-12-B)

■ Fix the air tank with the 4- ø14 anchor bolt hole on the bottom.

■ When directly connecting the air booster to the air tank (AT-24), use OUT port position D, and mount the O-ring attached with the air tank on the air booster. Then, fix to the top of the air tank with a hexagon socket head cap screw.

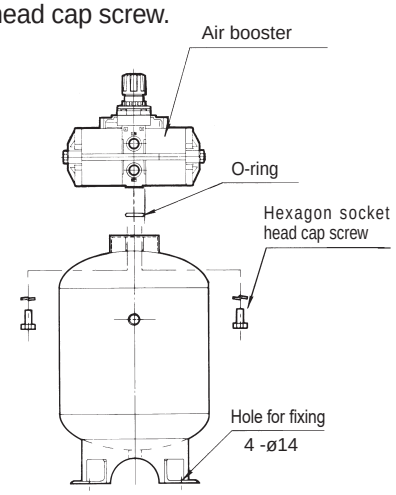

■ Installation of an air tank and regulator after the air booster is recommended for attaining stable secondary pressure.

Use/maintenance

⚠WARNING

■ Maintenance and inspection of air booster, Stop the primary pressure and release the secondary pressure before starting repair.

⚠CAUTION

■ When setting pressure, lift the pressure adjustment knob to release the lock, and then turn the pressure adjustment knob.
Secondary pressure increases when the pressure adjustment knob is turned clockwise. The pressure adjustment knob must be locked after use.

■ If primary pressure exceeds the set pressure due to fluctuations in pressure, etc., air is released from the pressure adjustment knob.
Set a regulator on the primary side, and adjust the pressure at least 0.1 MPa lower from the set pressure.

■ The silencer and pressure gauge are consumable parts and must be replaced regularly.

* Refer to the separate Maintenance Manual (ST-130606) for the maintenance procedures.

Pneumatic auxiliary components

Overview

Auxiliary components, such as speed controllers, silencers, fittings and tubes, are indispensable to the pneumatic system circuit. CKD pneumatic auxiliary components include a variety of compact and space saving series.

Features

(1) Supports up to ø450
Speed controllers for ø2.5 to ø450 and silencers for ø6 to ø450 are available.
(2) Fittings for M3 to Rc 1/2
Port sizes of M3 to Rc 1/2 are available for all fittings, including push-in. A widely varied model lineup provides a wide range of circuits.
(3) Tubes can be selected according to purpose or application

	Page
Speed controller	689
Silencer	757
Auxiliary valve	781
Fittings/tubes	813
Air blow nozzles	915

Compact design/wide selection

CKD pneumatic auxiliary components accurately function for a variety of pneumatic systems

Auxiliary components,
such as speed controllers, silencers and fittings,
are indispensable to the pneumatic system circuit.
CKD pneumatic auxiliary components
are compact, space saving
and have a great number of variations.
Pneumatic systems
are compact and can be
assembled in the most suitable manner.

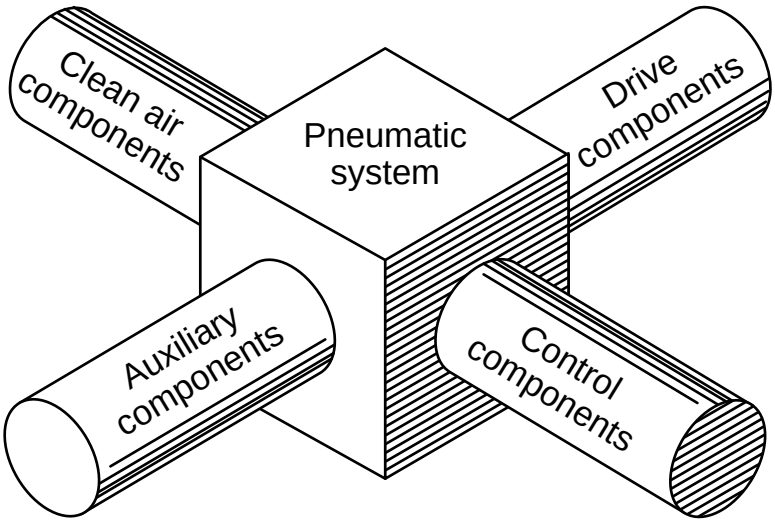

Speed controller

SC*

■ **Pneumatic auxiliary components**

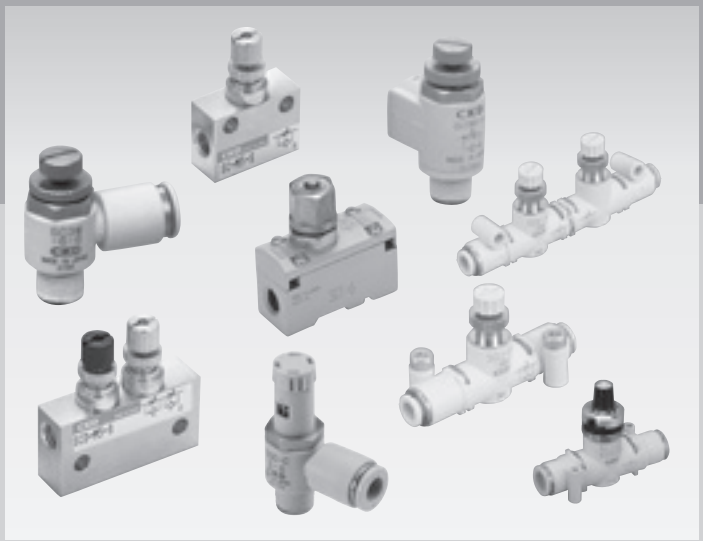

CONTENTS

Series variation	690
● Speed controller with adjusting dial (DSC)	694
● Needle valve with adjusting dial (DVL)	708
● Elbow/push-in fitting (SC3W)	716
● Universal/push-in fitting (SC3U)	720
● Line type/with push-in fitting (SCL2)	726
● In/out line type/with push-in fitting (SCD2)	726
● Needle valve/line type with push-in fitting (SCL2-N)	730
● Stainless steel anti-corrosion (SC3P)	736
● Direct port/elbow (SC3R)	740
● Miniature (SC-M3/M5)	742
● Miniature in/out (SCD-M3/M5)	744
● Medium bore size Rc1/8 to Rc1/2 (SC1)	748
● Large bore size Rc3/4 to Rc2 (SC)	750
● Outdoor Series Medium bore size (SC1-W)	752
⚠ Safety precautions	754

Series variation

Speed controller

● Applicable to ø2.5 to ø450 cylinders

Values in ( ) are for low speed, fine speed, low flow rate or fine flow rate types.

Model/outline	Model No.	Port size (Rc or R)											Compatible tube O.D.						Effective cross-sectional area (mm^2)		Flow rate (ℓ/min) ANR Pressure 0.5 MPa		Cylinder bore size (mm) reference	Page
		M3	M5	1/8	1/4	3/8	1/2	3/4	1	1 1/4	1 1/2	2	ø3.2	ø4	ø6	ø8	ø10	ø12	Free flow	Controlled flow	Free flow	Controlled flow		
● Speed controller with adjusting dial 	DSC-C-M5-3		●										●						1.3	0.9(0.3)	87	60(20)	ø6 to ø25	694
	DSC-C-M5-4		●											●					1.5	0.9(0.3)(0.1)	100	60(20)(6.7)	ø6 to ø25	
	DSC-C-M5-6		●												●				1.5	0.9(0.3)(0.1)	100	60(20)(6.7)	ø6 to ø25	
	DSC-(C-)6-4			●										●					3.2	2.4(0.9)(0.2)	210	160(60)(13)	ø15 to ø32	
	DSC-(C-)6-6			●											●				4	3(0.9)(0.2)	270	200(60)(13)	ø15 to ø32	
	DSC-(C-)6-8			●												●			4	3(0.9)(0.2)	270	200(60)(13)	ø15 to ø32	
	DSC-8-6				●										●				7	5(2)	470	320(130)	ø20 to ø50	
	DSC-8-8				●											●			8	6(2)	530	400(130)	ø20 to ø50	
	DSC-8-10				●												●		8	6(2)	530	400(130)	ø20 to ø50	
	DSC-10-6					●									●				10	6(4)	670	400(270)	ø32 to ø75	
	DSC-10-8					●										●			15	10.5(4)	1000	700(270)	ø32 to ø75	
	DSC-10-10					●											●		16	12(4)	1070	800(270)	ø32 to ø75	
	DSC-10-12					●												●	16	12(4)	1070	800(270)	ø32 to ø75	
	DSC-15-10						●										●		22	17(6)	1470	1120(400)	ø40 to ø100	
	DSC-15-12						●											●	24	17.5(6)	1600	1200(400)	ø40 to ø100	
	DSC-S□-06-H44													●					2.5	2.4(0.9)(0.2)	170	160(60)(13)	ø15 to ø32	702
	DSC-S□-06-H66														●				4.5	3(0.9)(0.2)	300	200(60)(13)	ø15 to ø32	
	DSC-S□-08-H66														●				6	5(2)	400	360(130)	ø20 to ø50	
	DSC-S□-08-H88															●			8	6(2)	550	400(130)	ø20 to ø50	
	DSC-S□-10-H88															●			13.5	10.5(4)	900	710(270)	ø32 to ø75	
	DSC-S□-10-H1010																●		16.5	12(4)	1100	780(270)	ø32 to ø75	
	DSC-S□-10-H1212																	●	18	12(4)	1200	780(270)	ø32 to ø75	
● Needle valve with adjusting dial, check valve 	DVL-S-06-H44-020													●					2.5	0.15	170	18	ø6 to ø40	708
	DVL-S-06-H66-020														●				4.5	0.15	300	18	ø6 to ø40	
	DVL-S-06-H44-080													●					2.5	1.2	170	80	ø6 to ø40	
	DVL-S-06-H66-080														●				4.5	1.2	300	80	ø6 to ø40	
	DVL-S-06-H66-160														●				4.5	2.5	300	160	ø6 to ø40	
	DVL-S-08-H66-240														●				6	3.6	400	240	ø20 to ø50	
	DVL-S-08-H88-240															●			8	3.6	550	240	ø20 to ø50	
	DVL-S-10-H88-400															●			13.5	6.6	900	440	ø32 to ø75	
	DVL-S-10-H1010-400																●		16.5	6.6	1100	440	ø32 to ø75	
	DVL-S-10-H1212-400																	●	18	6.6	1200	440	ø32 to ø75	
● Needle valve with adjusting dial, needle valve 	DVL-N-06-H44-020													●					0.15		18		–	708
	DVL-N-06-H66-020														●				0.15		18		–	
	DVL-N-06-H44-080													●					1.2		80		–	
	DVL-N-06-H66-080														●				1.2		80		–	
	DVL-N-06-H66-160														●				2.4		160		–	
	DVL-N-08-H66-240														●				3.6		240		–	
	DVL-N-08-H88-240															●			3.6		240		–	
	DVL-N-10-H88-400															●			6.6		440		–	
	DVL-N-10-H1010-400																●		6.6		440		–	
	DVL-N-10-H1212-400																	●	6.6		440		–	

Values in ( ) indicate low speed.

Model/outline	Model No.	Port size (Rc or R)											Compatible tube O.D.						Effective cross-sectional area (mm^2)		Flow rate (ℓ/min) ANR Pressure 0.5 MPa		Cylinder bore size (mm) reference	Page
		M3	M5	1/8	1/4	3/8	1/2	3/4	1	1 1/4	1 1/2	2	ø3.2	ø4	ø6	ø8	ø10	ø12	Free flow	Controlled flow	Free flow	Controlled flow		
● Elbow with push-in fitting 	SC3W-M3-3	●											●						0.4(0.3)	0.3(0.08)	27(20)	20(5.9)	ø4 to ø8	716
	SC3W-M3-4	●												●					0.4(0.3)	0.3(0.08)	27(20)	20(5.9)	ø4 to ø8	
	SC3W-M5-3	●	●										●						1.3(1.2)	1.2(0.1)	87(80)	80(6.7)	ø6 to ø25	
	SC3W-M5-4		●											●					1.3(1.2)	1.2(0.1)	87(80)	80(6.7)	ø6 to ø25	
	SC3W-M5-6		●												●				1.3(1.2)	1.2(0.1)	87(80)	80(6.7)	ø6 to ø25	
	SC3W-6-4			●										●					3.2(3.2)	2.8(0.2)	210(210)	190(13)	ø15 to ø32	
	SC3W-6-6			●											●				4.0(4.0)	3.6(0.2)	270(270)	240(13)	ø15 to ø32	
	SC3W-6-8			●												●			4	3.6	270	240	ø15 to ø32	
	SC3W-8-6				●										●				7	6.5	470	430	ø20 to ø50	
	SC3W-8-8				●											●			7.5	7	500	470	ø20 to ø50	
	SC3W-8-10				●												●		8	7	530	470	ø20 to ø50	
	SC3W-10-6					●									●				10	10	650	650	ø32 to ø75	
	SC3W-10-8					●										●			15	14	1000	930	ø32 to ø75	
	SC3W-10-10					●											●		16	15	1100	1000	ø32 to ø75	
	SC3W-10-12					●												●	16	15	1100	1000	ø32 to ø75	
	SC3W-15-10						●										●		22	22	1500	1500	ø40 to ø100	
	SC3W-15-12						●											●	24	24	1600	1600	ø40 to ø100	
● Universal with push-in fitting 	SC3U-M3-3	●											●						0.45(0.35)	0.5(0.08)	31(24)	34(5.4)	ø4 to ø8	720
	SC3U-M3-4	●												●					0.45(0.35)	0.5(0.08)	31(24)	34(5.4)	ø4 to ø8	
	SC3U-M5-3		●										●						1.4(1.4)	1.4(0.14)	95(95)	95(9.5)	ø6 to ø25	
	SC3U-M5-4		●											●					1.4(1.4)	1.4(0.14)	95(95)	95(9.5)	ø6 to ø25	
	SC3U-M5-6		●												●				1.6(1.4)	1.4(0.14)	105(95)	95(9.5)	ø6 to ø25	
	SC3U-6-4			●										●					3.2(3.2)	2.8(0.25)	215(215)	190(17)	ø15 to ø32	
	SC3U-6-6			●											●				4(3.7)	3.8(0.25)	270(245)	260(17)	ø15 to ø32	
	SC3U-6-8			●												●			4	3.8	270	260	ø15 to ø32	
	SC3U-8-6				●										●				7	6.5	475	440	ø20 to ø50	
	SC3U-8-8				●											●			7.5	7	510	475	ø20 to ø50	
	SC3U-8-10				●												●		8	7	540	475	ø20 to ø50	
	SC3U-10-8					●										●			14.5	14	985	950	ø32 to ø75	
	SC3U-10-10					●											●		16	17	1090	1150	ø32 to ø75	
	SC3U-10-12					●												●	16	18	1090	1220	ø32 to ø75	
	SC3U-15-10						●										●		22	22	1500	1500	ø40 to ø100	
	SC3U-15-12						●											●	24	24	1630	1630	ø40 to ø100	

Values in ( ) are for low speed or fine speed types.

Model/outline	Model No.	Port size (Rc or R)											Compatible tube O.D.							Effective cross-sectional area (mm^2)		Flow rate (ℓ/min) ANR 0.5 MPa		Cylinder bore size (mm) reference	Page
		M3	M5	1/8	1/4	3/8	1/2	3/4	1	1 1/4	1 1/2	2	ø1.8	ø3.2	ø4	ø6	ø8	ø10	ø12	Free flow	Controlled flow	Free flow	Controlled flow		
● Line type with push-in fitting 	SCL2-04-H22												●							(0.2)	(0.15)	(13)	(10)	ø4 to ø25	726
	SCL2-04-H42												●		●					(0.2)	(0.15)	(13)	(10)	ø4 to ø25	
	SCL2-04-H24												●		●					(0.2)	(0.15)	(13)	(10)	ø4 to ø25	
	SCL2-04-H44														●					1.9	1.9(0.2)	130	130(13)	ø4 to ø25	
	SCL2-06-H66															●				4.5	4.5(0.2)	300	130(13)	ø6 to ø40	
	SCL2-08-H66															●				6	6	400	400	ø20 to ø50	
	SCL2-08-H88																●			8	8	550	550	ø20 to ø50	
	SCL2-10-H88																●			13.5	13.5	900	900	ø32 to ø75	
	SCL2-10-H1010																	●		16.5	16.5	1100	1100	ø32 to ø75	
	SCL2-10-H1212																		●	18	18	1200	1200	ø32 to ø75	
● In/out line type with push-in fitting  	SCD2-04-H22												●							-	(0.15)	-	(10)	ø4 to ø25	726
	SCD2-04-H42												●		●					-	(0.15)	-	(10)	ø4 to ø25	
	SCD2-04-H44														●					-	1.5(0.2)	-	100(13)	ø4 to ø25	
	SCD2-06-H66															●				-	3.7(0.2)	-	250(13)	ø6 to ø40	
	SCD2-08-H66															●				-	5	-	330	ø20 to ø50	
	SCD2-08-H88																●			-	6	-	400	ø20 to ø50	
	SCD2-10-H88																●			-	11	-	750	ø32 to ø75	
	SCD2-10-H1010																	●		-	12.5	-	850	ø32 to ø75	
	SCD2-10-H1212																		●	-	13	-	900	ø32 to ø75	
● Needle valve  	SCL2-N-04-H44-010														●					-	0.2	-	13	-	730
	SCL2-N-04-H44-050														●					-	0.7	-	50	-	
	SCL2-N-06-H66-010															●				-	0.2	-	13	-	
	SCL2-N-06-H66-050															●				-	0.7	-	50	-	
	SCL2-N-06-H66-150															●				-	2.2	-	150	-	
	SCL2-N-08-H66-300															●				-	4.5	-	300	-	
	SCL2-N-08-H88-300																●			-	4.5	-	300	-	

Values in ( ) are for low speed or fine speed types.

Model/outline	Model No.	Port size (Rc or R)											Compatible tube O.D.						Effective cross-sectional area (mm^2)		Flow rate (ℓ/min) ANR Pressure 0.5 MPa		Cylinder bore size (mm) reference	Page
		M3	M5	1/8	1/4	3/8	1/2	3/4	1	1 1/4	1 1/2	2	ø3.2	ø4	ø6	ø8	ø10	ø12	Free flow	Controlled flow	Free flow	Controlled flow		
● Stainless steel anti-corrosion 	SC3P-M5-4		●											●					0.9	1.1	55	70	ø6 to ø25	736
	SC3P-M5-6		●												●				0.9	1.1	55	70	ø6 to ø25	
	SC3P-6-4			●										●					3	2.3	200	150	ø15 to ø32	
	SC3P-6-6			●											●				3	2.3	200	150	ø15 to ø32	
	SC3P-6-8			●												●			3.5	2.3	230	150	ø15 to ø32	
	SC3P-8-6				●										●				5.9	4	390	270	ø20 to ø50	
	SC3P-8-8				●											●			6	4	400	270	ø20 to ø50	
	SC3P-8-10				●												●		6	4	400	270	ø20 to ø50	
	SC3P-10-6					●									●				9	8	600	550	ø32 to ø75	
	SC3P-10-8					●										●			12	12.8	800	850	ø32 to ø75	
	SC3P-10-10					●											●		12	14	800	920	ø32 to ø75	
	SC3P-10-12					●												●	12.5	14	840	920	ø32 to ø75	
	SC3P-15-8						●									●			17	16.5	1140	1100	ø40 to ø100	
	SC3P-15-10						●										●		21	22	1380	1450	ø40 to ø100	
	SC3P-15-12						●											●	21	24	1380	1600	ø40 to ø100	
● Direct port/ elbow 	SC3R-M5		●																1.2	0.7	80	47	ø6 to ø16	740
	SC3R-6			●															4.0	3.6	270	240	ø15 to ø32	
	SC3R-8				●														7.5	7	500	470	ø20 to ø50	
	SC3R-10					●													16	15	1100	1100	ø32 to ø75	
	SC3R-15						●												24	24	1600	1600	ø40 to ø110	
● Miniature speed controller 	SC-M3	●																	0.3	0.25	20	16	ø2.5 to ø10	742
	SC-M5		●																0.8	0.7(0.1)	53	47(6.7)	ø6 to ø25	
● Miniature meter-in meter-out speed controller 	SCD-M3	●																	0.2		13		ø4 to ø8	744
	SCD-M5		●																0.55(0.1)		37(6.7)		ø6 to ø25	
● Medium bore size Rc1/8 to Rc1/2 	SC1-6			●															11	8	730	530	ø20 to ø50	748
	SC1-8				●														14	13	930	870	ø32 to ø75	
	SC1-10					●													39	22	2600	1500	ø50 to ø140	
	SC1-15						●												43	36	2900	2400	ø80 to ø160	
● Large bore size Rc3/4 to Rc2 	SC-20A							●											155	125	10300	8300	ø100 to ø200	750
	SC-25A								●										260	280	17400	18700	ø140 to ø250	
	SC-32A									●									1000	1000	68000	68000	ø300 to ø450	
	SC-40A										●								1000	1000	68000	68000	ø300 to ø450	
	SC-50A											●							1500	1400	97000	91000	ø450 to	
● Outdoor Series Medium bore size Rc1/4 to Rc1/2 	SC1-8-W					●													14	13	930	870	ø32 to ø75	752
	SC1-10-W						●												39	22	2600	1500	ø50 to ø140	
	SC1-15-W							●											43	36	2900	2400	ø80 to ø160	

Flow rate can be seen!

An inline type is added to the speed controller featuring a dial with linear flow characteristics

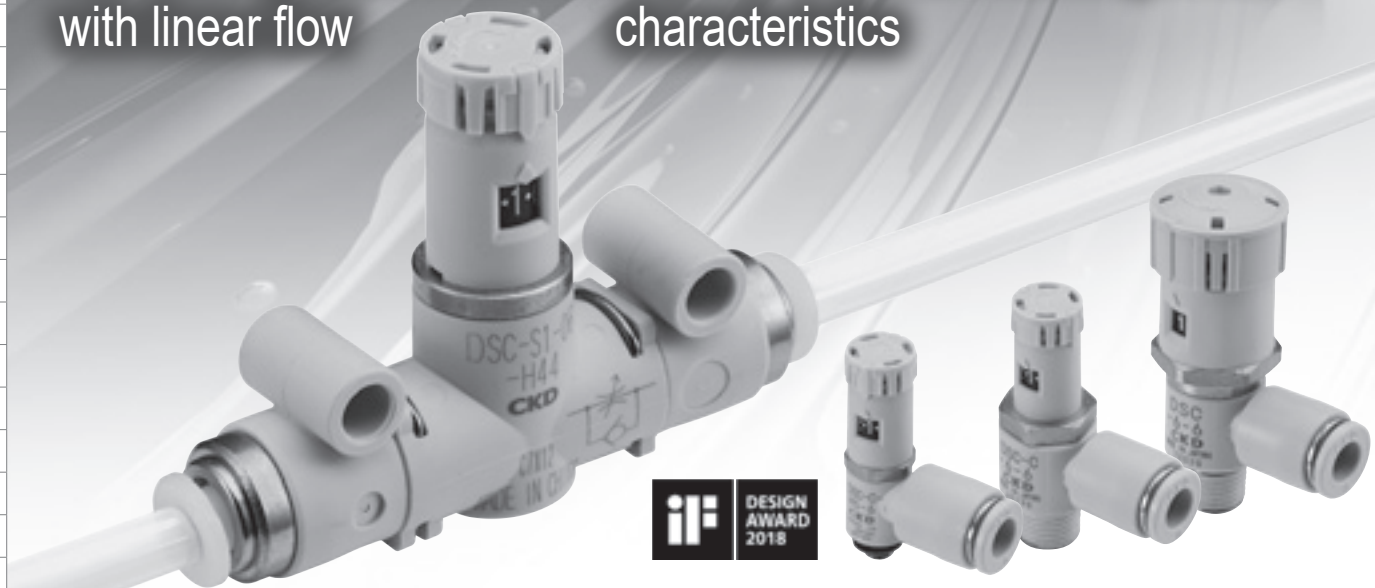

(Received the 2016 Good Design Award)

Inline

Unrestricted mounting

The mounting area rotates by 360 degrees, enabling mounting and installation from the base, side, or panel, and no mounting bracket is required.

Example of base mounting

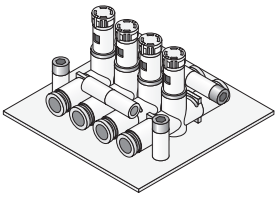

Example of wall mounting

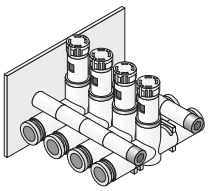

Example of panel mounting

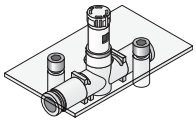

Dial display direction can be selected

The dial display direction can be selected according to the installation direction.

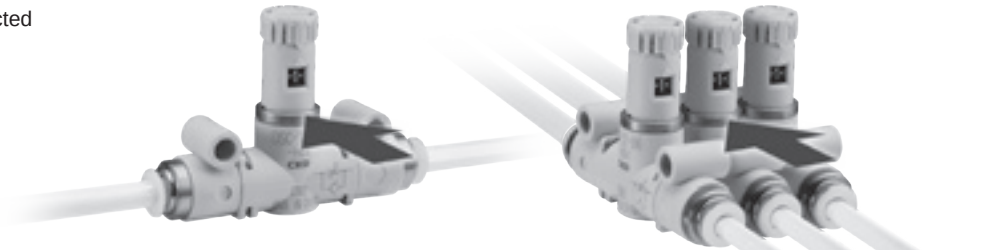

1: Dial direction side

2: Dial direction IN/OUT direction

Usage examples

Purge gas flow rate adjustment

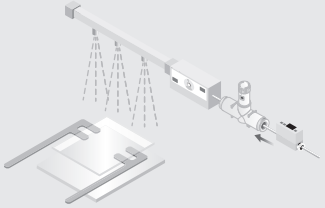

Vacuum burst flow rate adjustment using vacuum suction

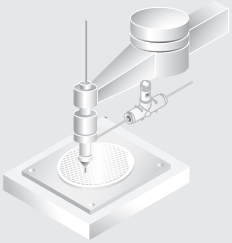

Driving cylinder

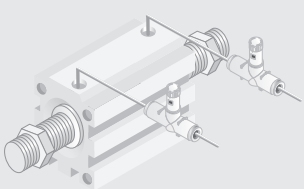

Air knife

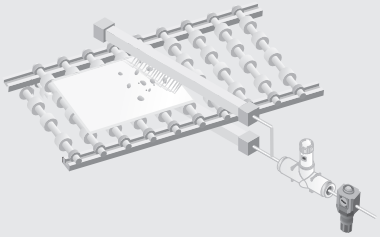

Compact

Industry's smallest size *

Use of a small dial allows installation on the speed controller cylinder without interfering with the ground surface of the cylinder. (PAT.)

* October 2015, CKD research.



Inline | Compact | Standard

Flow characteristics in proportion to dial value (needle position)

Thanks to the optimal design of the needle, linear flow characteristics proportional to the dial value (needle position) are achieved and cylinder speed setting is made easy. Flow rate barely varies and can be reset by simply setting the dial to the same value during replacement. Job-hours can be significantly reduced and misalignments prevented.

[Flow characteristics]

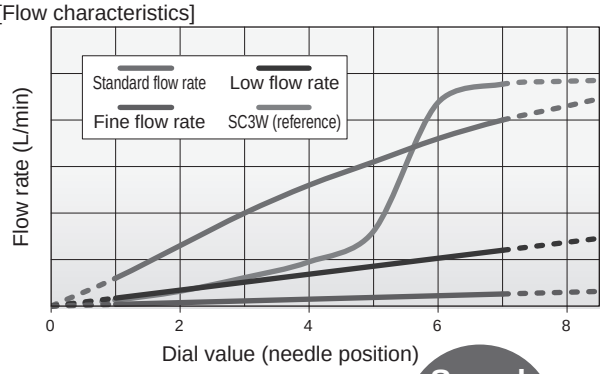

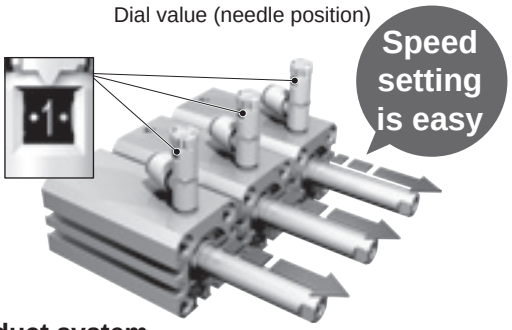

Inline | Compact

Finer quantification is achieved

Indicator displays the number of dial rotations in increments of 0.5.

Finer quantification is now possible.

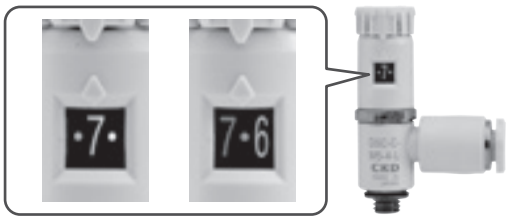

Operability has been improved

With "clicks" that can be felt with your fingertips, each 0.5 turn of the knob can now be confirmed even in situations where the dial display cannot be visually inspected.



Inline | Compact | Standard

Easy adjustment

Push locking method is used for fixing the needle.
Adjustment is easy with simple operation.

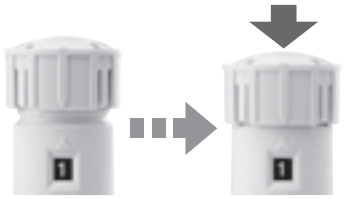

Knob features rotation position indicators

Easy management of cylinder speed values.

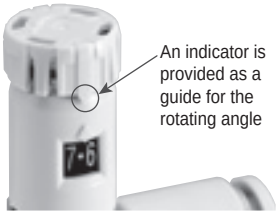

Speed of rotation can be checked from two surfaces

Dial display is visible from front and back.



Product system

Model variations			Tube O.D.	Port size/body size
Compact	Elbow	Standard flow rate DSC-C-*-*	ø3.2 ø4 ø6 ø8 ø10 ø12	M5 R1/8 R1/4 R3/8 R1/2 06 08 10
		Low flow rate DSC-C-*-*-L		
		Fine flow rate DSC-C-*-*-F		
	Inline	Standard flow rate DSC-S*-*-*		
		Low flow rate DSC-S*-*-*-L		
		Fine flow rate DSC-S*-*-*-F		
Standard	Elbow	Standard flow rate DSC-*-*		
		Low flow rate DSC-*-*-L		



Speed controller with adjusting dial

DSC Series

● Port size: M5, R1/8 to R1/2

JIS symbol 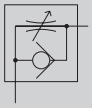 (Meter-out) 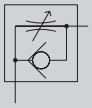 (Meter-in)

RoHS

Specifications

● Compact

Item			DSC-C-M5			DSC-C-6		
Compatible tube O.D.		mm	ø3.2	ø4	ø6	ø4	ø6	ø8
Port size			M5			R1/8		
Working fluid			Compressed air					
Max. working pressure		MPa	1.0 (≈150 psi, 10 bar)					
Min. working pressure		MPa	0.05 (≈7.3 psi, 0.5 bar)					
Proof pressure		MPa	1.5 (≈220 psi, 15 bar)					
Fluid temperature		°C	5 (41°F) to 60 (140°F) (no freezing. *2)					
Ambient temperature		°C	0 (32°F) to 60 (140°F) (no freezing)					
Needle control range			1 to 7 rotations					
Weight		g	10.5	11.5	12	22	23	24
Free flow	Flow rate	ℓ/min(ANR)	87	100		210	270	
	Eff. X-sectional area	mm^2	1.3	1.5		3.2	4	
Controlled flow (Standard flow rate)	Flow rate	ℓ/min(ANR)	60			160	200	
	Eff. X-sectional area	mm^2	0.9			2.4	3	
Controlled flow (Low flow rate)	Flow rate	ℓ/min(ANR)	20			60		
	Eff. X-sectional area	mm^2	0.3			0.9		
Controlled flow (fine flow rate)	Flow rate	ℓ/min(ANR)	-	6.7		13		-
	Eff. X-sectional area	mm^2	-	0.1		0.2		-

● Standard

Item			DSC-6			DSC-8			DSC-10				DSC-15	
Compatible tube O.D.		mm	ø4	ø6	ø8	ø6	ø8	ø10	ø6	ø8	ø10	ø12	ø10	ø12
Port size			R1/8			R1/4			R3/8				R1/2	
Working fluid			Compressed air											
Max. working pressure		MPa	1.0 (≈150 psi, 10 bar)											
Min. working pressure		MPa	0.05 (≈7.3 psi, 0.5 bar)											
Proof pressure		MPa	1.5 (≈220 psi, 15 bar)											
Fluid temperature		°C	5 (41°F) to 60 (140°F) (no freezing. *2)											
Ambient temperature		°C	0 (32°F) to 60 (140°F) (no freezing)											
Needle control range			1 to 10 rotations											
Weight		g	33	34	35	45	46	48	60	61	64	65	95	97
Free flow	Flow rate	ℓ/min(ANR)	210	270		470	530		670	1000	1070		1470	1600
	Eff. X-sectional area	mm^2	3.2	4		7	8		10	15	16		22	24
Controlled flow (Standard flow rate)	Flow rate	ℓ/min(ANR)	160	200		320	400		400	700	800		1120	1200
	Eff. X-sectional area	mm^2	2.4	3		5	6		6	10.5	12		17	17.5
Controlled flow (Low flow rate)	Flow rate	ℓ/min(ANR)	60			130			270				400	
	Eff. X-sectional area	mm^2	0.9			2			4				6	

*1: Flow rate is the atmospheric pressure conversion value at pressure 0.5 MPa.
*2: Freezing may occur due to adiabatic expansion depending on the air quality (dew point).

Specifications for rechargeable battery

● Structure suitable for use in general assembly during the rechargeable battery manufacturing process.

DSC - …… - P4

Clean-room specifications

● Anti-dust generation structure for use in clean rooms.

DSC - …… - P70

How to order

DSC -C - 6 - 6 - I L

Ⓐ Product size
Ⓑ Port size
Ⓒ Compatible tube O.D.
Ⓓ Control method
Ⓔ Flow rate

Code	Description
Ⓐ Product size	
Blank	Standard
-C	Compact
Ⓑ Port size	
M5	M5
6	R1/8
8	R1/4
10	R3/8
15	R1/2
Ⓒ Compatible tube O.D.	
3	ø3.2
4	ø4
6	ø6
8	ø8
10	ø10
12	ø12
Ⓓ Control method	
Blank	Meter-out
I	Meter-in (Push ring color: black)
Ⓔ Flow rate	
Blank	Standard flow rate
L	Low flow rate
F	Fine flow rate (compact only)

Port size - Compatible tube O.D. - flow rate combination

Ⓐ Product size	Compact		Standard			
Ⓑ Port size	M5	R1/8	R1/8	R1/4	R3/8	R1/2
ø3.2	○					
ø4	◎	◎	○			
ø6	◎	◎	○	○	○	
ø8		○	○	○	○	
ø10				○	○	○
ø12					○	○

○: Flow rate “F” (fine flow rate) cannot be selected
◎: Flow rate “F” (fine flow rate) can be selected

Flow characteristics

*The flow rate characteristics graph indicates reference values and does not guarantee the values.

●Compact

●DSC-C-M5-*

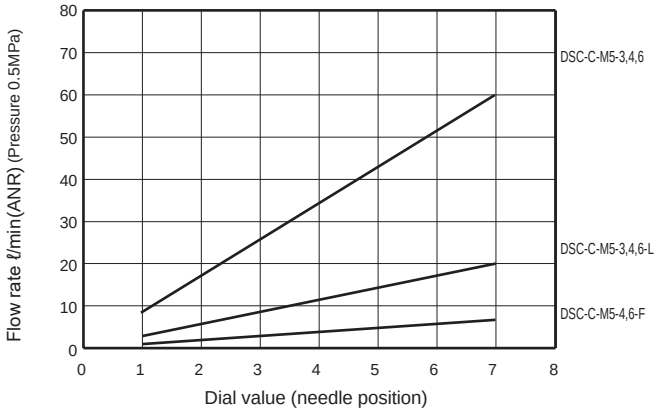

●DSC-C-6-*

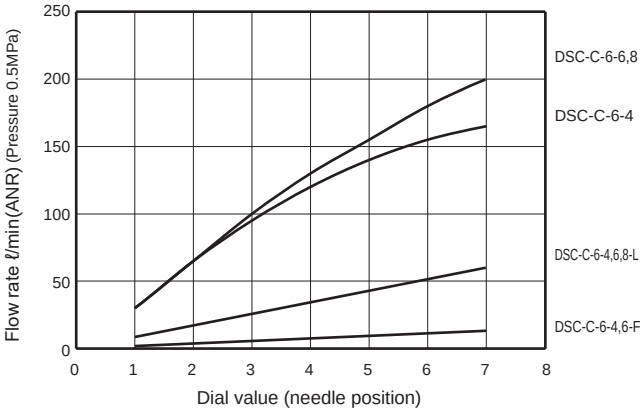

●Standard

●DSC-6-*

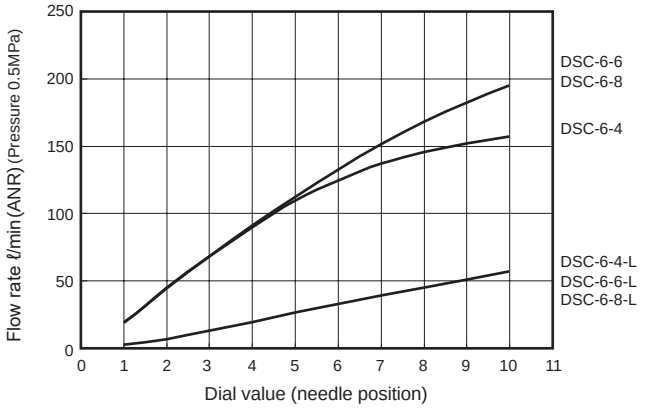

●DSC-8-*

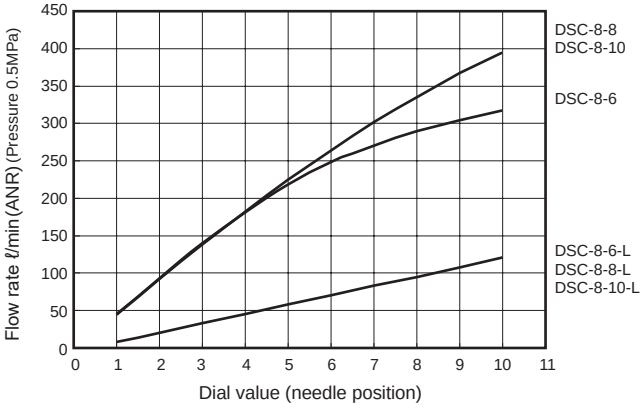

●DSC-10-*

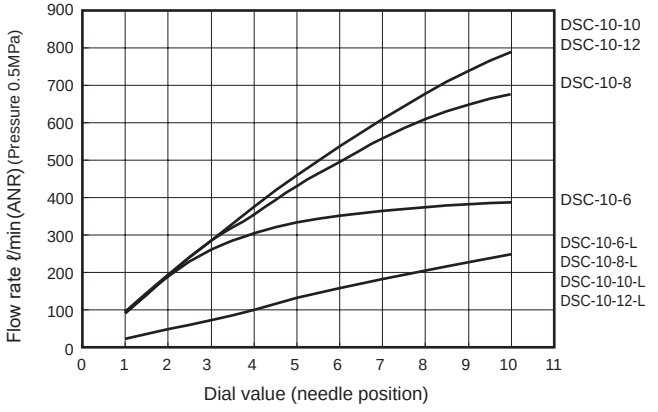

●DSC-15-*

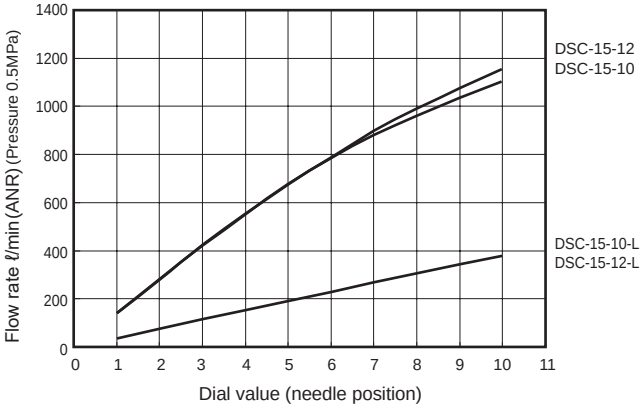

Note: The flow characteristics may differ depending on the piping conditions around the unit and the temperature change.

Internal structure and parts list

●Compact

●DSC-C-M5-4,6

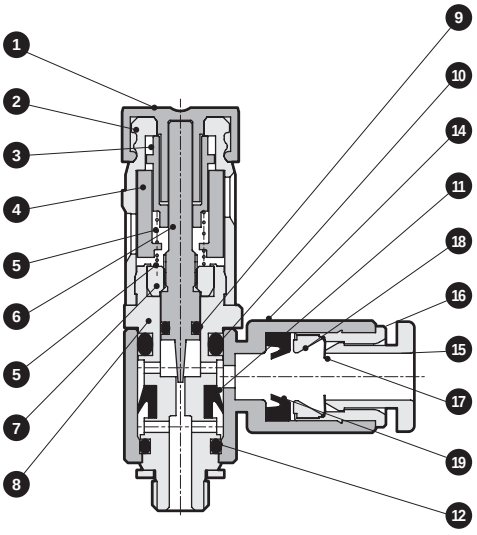

●DSC-C-M5-3

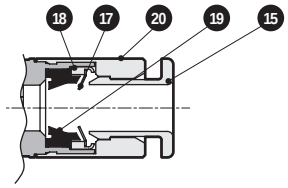

●DSC-C-6-*

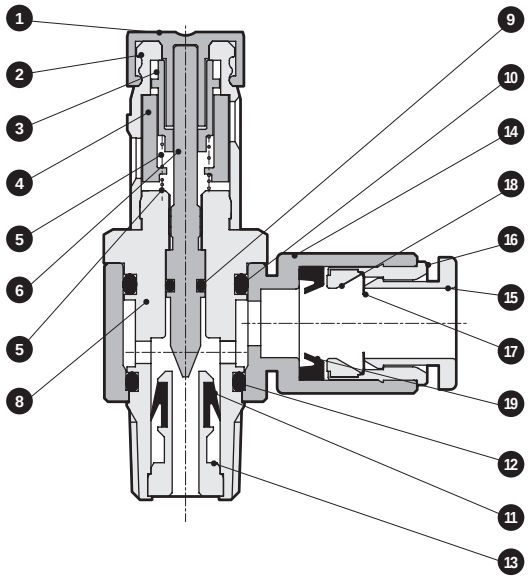

Part No.	Part name	Material	Part No.	Part name	Material
1	Knob	Polyacetal	11	Packing	Hydrogenated nitrile rubber
2	Gear cover	Polybutylene terephthalate	12	O-ring	Nitrile rubber
3	Slide gear	Polybutylene terephthalate	13	Check part	Brass
4	Indication ring	Polybutylene terephthalate	14	Rotor	Polybutylene terephthalate
5	Spring	Stainless steel	15	Push ring	Polybutylene terephthalate
6	Needle	Stainless steel	16	Outer ring	Brass
7	Gland nut	Brass	17	Chuck	Stainless steel
8	Rotary shaft	Brass	18	Chuck holder	Polyethersulfone (brass) *1
9	O-ring	Nitrile rubber	19	Packing	Nitrile rubber
10	O-ring	Nitrile rubber	20	Fitting body	Copper alloy

*1: Values shown in ( ) are when DSC-C-M5-3 is selected
*2: All the brass parts have electroless nickel plating.

●Standard

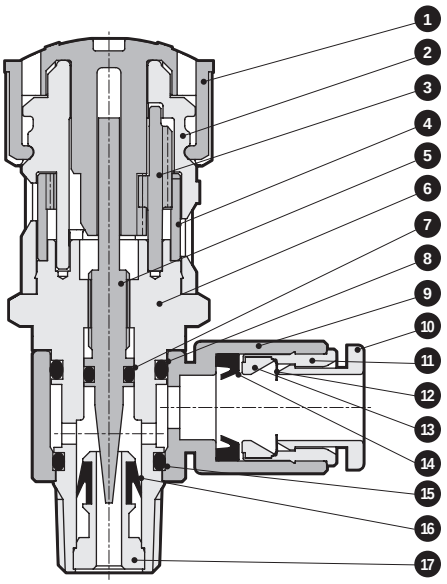

Part No.	Part name	Material
1	Knob	Polyacetal
2	Gear cover	Polybutylene terephthalate
3	Gear	Stainless steel
4	Indication ring	Polyacetal
5	Needle	Stainless steel
6	Rotary shaft	Brass
7	O-ring	Nitrile rubber
8	O-ring	Nitrile rubber
9	Rotor	Polybutylene terephthalate
10	Push ring	Polybutylene terephthalate
11	Outer ring	Brass
12	Chuck	Stainless steel
13	Chuck holder	polyether sulfone
14	Packing	Nitrile rubber
15	O-ring	Nitrile rubber
16	Packing	Hydrogenated nitrile rubber
17	Check part	Brass

*1: All the brass parts have electroless nickel plating.

Dimensions

● Compact

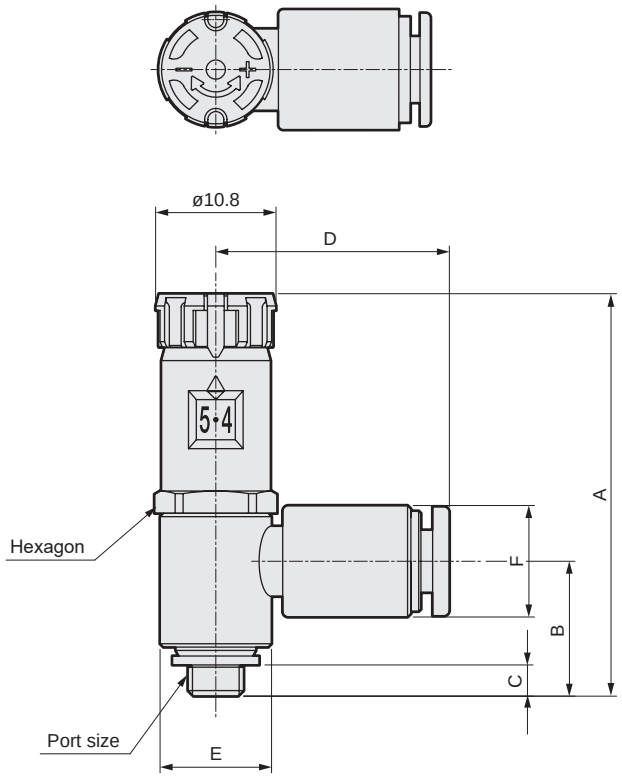

● Standard

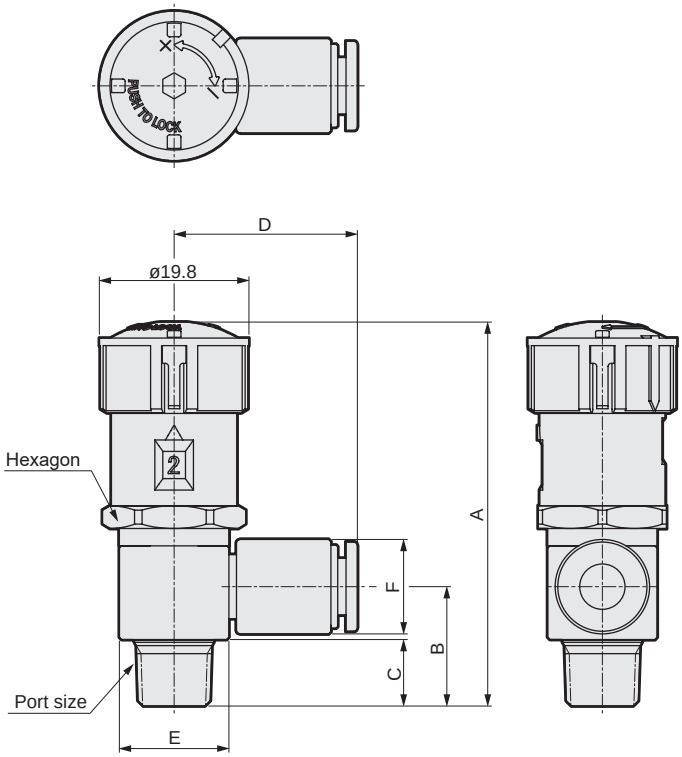

Model No.	Product size	Port size	Compatible tube O.D.	A		B	C	D	E	F	Hexagon
				When locked	At adjustment						
DSC-C-M5-3	Compact Type	M5x0.8	ø3.2	36	37.5	11.9	3	16.5	10	7.5	10
DSC-C-M5-4			ø4			11.9		21		10	
DSC-C-M5-6			ø6			11.7		22.5		12.5	
DSC-C-6-4		R1/8	ø4	41.9	43.4	16.2	8.7	23.5	14.5	10	13
DSC-C-6-6			ø6			15.7		24.5		12.5	
DSC-C-6-8			ø8			15.4		26		14.5	
DSC-6-4	Standard Type	R1/8	ø4	51	54	16.2	8.7	23.5	14.5	10	17
DSC-6-6			ø6			15.7		24.5		12.5	
DSC-6-8			ø8			15.4		26		14.5	
DSC-8-6		R1/4	ø6	55.5	58.5	20	11.7	26	18	12.5	17
DSC-8-8			ø8			19		27.5		14.5	
DSC-8-10			ø10			19		30.5		17.5	
DSC-10-6		R3/8	ø6	58	61	23.1	12.7	28.5	22.5	12.5	19
DSC-10-8			ø8			21.3		30		14.5	
DSC-10-10			ø10			21.8		32		17.5	
DSC-10-12			ø12			21.7		33.5		20	
DSC-15-10		R1/2	ø10	63	66	25.2	15.7	34.5	27.5	17.5	24
DSC-15-12			ø12			25.7		36		20	

MEMO

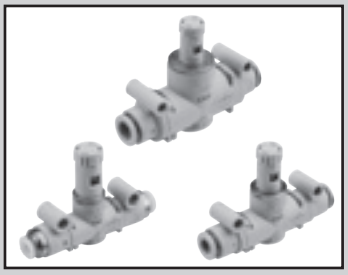

Inline speed controller with adjusting dial

DSC-S Series

● Port size: ø4, ø6, ø8, ø10, ø12

JIS symbol 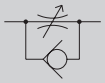

RoHS

Specifications

1 MPa ≈ 145.0 psi, 1 MPa = 10 bar

Item		DSC-S□-06		DSC-S□-08		DSC-S□-10		
Compatible tube O.D. mm		ø4	ø6	ø6	ø8	ø8	ø10	ø12
Working fluid		Compressed air						
Max. working pressure MPa		1.0 (≈145 psi, 10 bar)						
Min. working pressure MPa		0.1 (≈15 psi, 1 bar)						
Proof pressure MPa		1.5 (≈217 psi, 15 bar)						
Fluid temperature °C		5 (41°F) to 60 (140°F) (no freezing. *2)						
Ambient temperature °C		0 (32°F) to 60 (140°F) (no freezing)						
Needle control range		1 to 7 rotations						
Weight g		24	18	30	31	52	57	60
Free flow	Flow rate L/min (ANR)	170	300	400	550	900	1100	1200
	Effective cross-sectional area mm²	2.5	4.5	6	8	13.5	16.5	18
Controlled flow (Standard flow rate)	Flow rate L/min (ANR)	160	200	360	400	710	780	780
	Effective cross-sectional area mm²	2.4	3	5	6	10.5	12	12
Controlled flow (Low flow rate)	Flow rate L/min (ANR)	60		130		270		
	Effective cross-sectional area mm²	0.9	0.9	2	2	4	4	4
Controlled flow (fine flow rate)	Flow rate L/min (ANR)	13		–	–	–	–	–
	Effective cross-sectional area mm²	0.2	0.2	–	–	–	–	–

*1: Flow rate is the atmospheric pressure conversion at 0.5 MPa.
*2: Freezing may occur due to adiabatic expansion depending on the air quality (dew point).

How to order

DSC – S 1 - 06 - H66 - L

Ⓐ Product
Ⓑ Dial direction
Ⓒ Body size
Ⓓ Compatible tube O.D.
Ⓔ Flow rate

Code	Description
Ⓐ Product	
–S	Inline
Ⓑ Dial direction	
1	Side
2	IN/OUT direction
Ⓒ Body size	
06	1/8 thread equivalent
08	1/4 thread equivalent
10	3/8 thread equivalent
Ⓓ Compatible tube O.D.	
H44	ø4
H66	ø6
H88	ø8
H1010	ø10
H1212	ø12
Ⓔ Flow rate	
Blank	Standard flow rate
L	Low flow rate
F	Fine flow rate

Combination of body, compatible tube O.D., and flow rate

	Ⓒ Body size						
	06		08		10		
Ⓓ Compatible tube O.D. / Ⓔ Flow rate	H44	H66	H66	H88	H88	H1010	H1212
Blank	●	●	●	●	●	●	●
L	●	●	●	●	●	●	●
F	●	●					

Flow characteristics

*The flow rate characteristics graph indicates reference values and does not guarantee the values.

●DSC-S□-06-*

Standard flow rate, low flow rate, flow rate

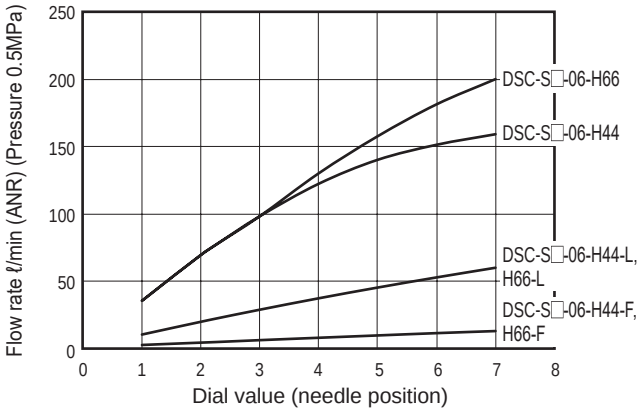

●DSC-S□-08-*

Standard flow rate, low flow rate

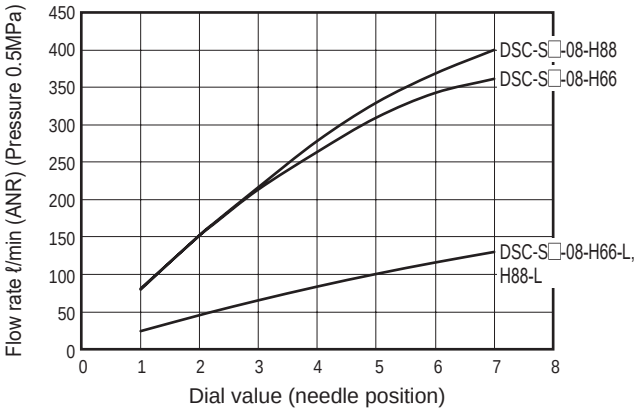

●DSC-S□-10-*

Standard flow rate, low flow rate

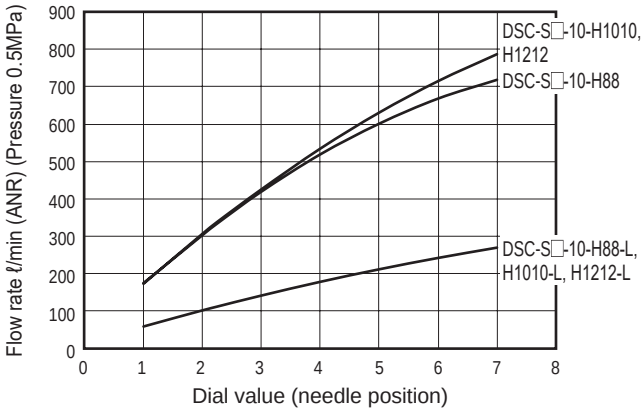

Internal structure and parts list

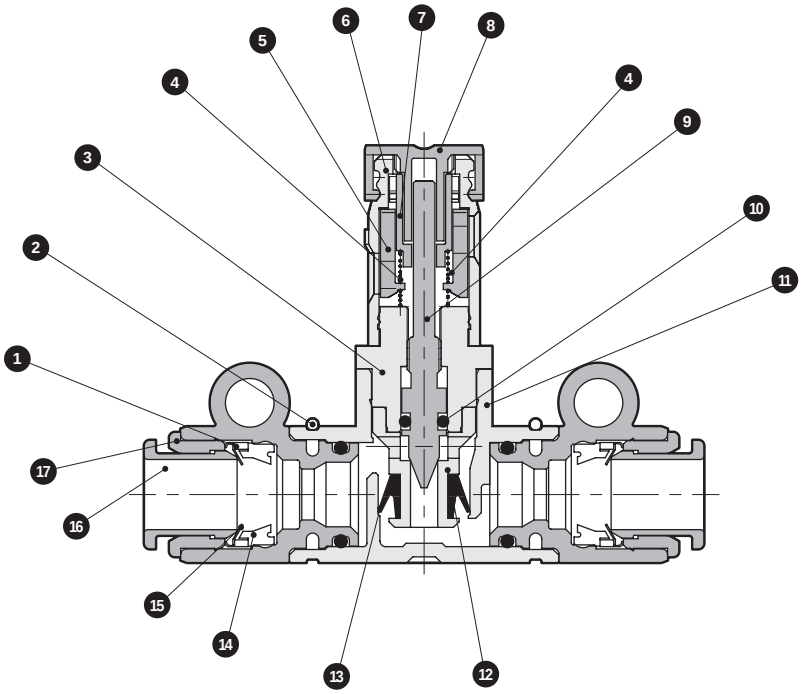

Part No.	Part name	Material
1	Holder	Brass or polyether sulfone
2	Stopper ring	Stainless steel
3	Needle guide	Brass
4	Spring	Stainless steel
5	Indication ring	Polybutylene terephthalate
6	Gear cover	Polybutylene terephthalate
7	Slide gear	Polybutylene terephthalate
8	Knob	Polyacetal
9	Needle	Stainless steel
10	O-ring	Nitrile rubber
11	Body	Polybutylene terephthalate
12	Check bracket	Brass
13	Check packing	Hydrogenated nitrile rubber
14	Packing	Nitrile rubber
15	Chuck	Stainless steel
16	Push ring	Polybutylene terephthalate
17	Outer ring	Brass

*1: All the brass parts have electroless nickel plating.

Dimensions

●Dial direction; Side surface (S1)

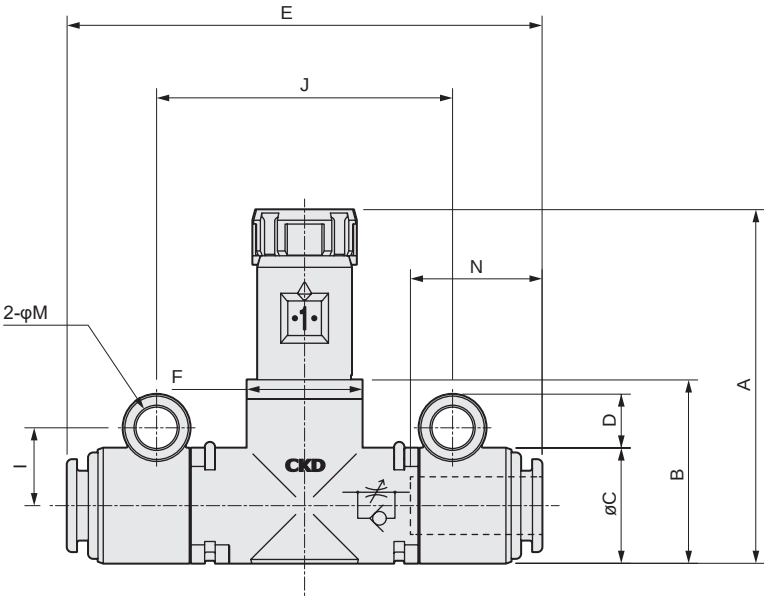

●Installation spacing dimensions for manifolds

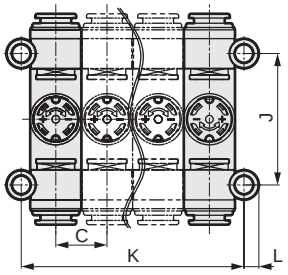

●Dial direction; IN-OUT direction (S2)

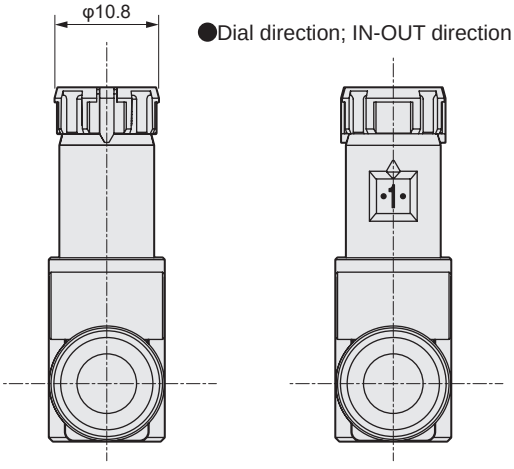

Model No.	Connection tube O.D.	A		B	C	D	E	F	I	J	K	L	M (Mounting hole diameter)	N (Tube insertion length)
		When locked	During adjustment											
DSC-S□-06-H44	ø4	36.8	38.3	19.1	12	5.6	54.6	12	8.1	30.8	12×n+4.2	3.5	4.3	12.9
DSC-S□-06-H66	ø6						49.4							13.7
DSC-S□-08-H66	ø6	41.9	43.4	24.2	15	5.6	63.1	15	9.5	40.8	15×n+4	3.6		18
DSC-S□-08-H88	ø8						66.3							19
DSC-S□-10-H88	ø8	48.4	49.9	30.7	20	5.1	70.8	19.4	11.5	47	20×n+3			19
DSC-S□-10-H1010	ø10						75.4							21
DSC-S□-10-H1212	ø12						79.6				20.4×n+3			22

Pneumatic components Warnings/Cautions

Be sure to read this section before use.
For general precautions for pneumatic components, refer to Intro Page 63.

Product-specific cautions: Speed controller with dial

Design/selection

WARNING

- Do not constantly push down or apply load onto the push ring for the push-in fitting.
  - The tube may lose its holding capacity.
  - When transporting an assembled product, avoid positions where the push ring is constantly pushed down.

CAUTION

- This valve cannot be used as a stop valve that requires zero leakage.
  Slight leakage is allowed for in this product's specifications.
- Note that the flow rate may differ from the values on pages 698 and 703 depending on the piping conditions around the unit and the temperature changes.
- Do not use this valve in circuits where ozone is generated intentionally. Ozone resistance is sufficient for naturally occurring ambient ozone. Packing deteriorates if ozone levels are high.
- This product is used for compressed air. Do not use with other fluids.
- Use the product in the range of conditions specified for the product. Contact CKD when using the product outside specifications or for special applications.
  - Use of the product outside the specifications range may result in insufficient performance, and its safety cannot be guaranteed.
  - This product may not be usable in special applications and environments. For example, use in applications requiring safety, including nuclear energy, railways, aircraft, vehicles, medical devices, devices in contact with beverages or foodstuffs, amusement devices, emergency cutoff circuits, press machines, brake circuits, or safety devices or applications.
- Confirm before use that the product will withstand the working environment.
  - This product cannot be used in environments where functional obstacles could occur. Such environments include high temperatures, chemical atmospheres, or where chemical liquids, vibration, moisture, water dripping or gas is present. Environments where ozone is generated.
  - Do not use the product in a place where it could come in direct contact with coolant, spatter, etc.
- Understand the characteristics of compressed air before designing a pneumatic circuit.
  - The same functions as mechanical, hydraulic and electrical methods cannot be anticipated if instantaneous stopping and holding are required during an emergency stop.
  - Pop-out, air discharge, or leakage due to air compression and expansion may occur.
- Install a "pressure switch" and "residual pressure exhaust valve" on the device's compressed air supply side.
  - The pressure switch will disable operation until the set pressure is reached. The residual pressure exhaust valve releases compressed air into the pneumatic pressure circuit to prevent accidents caused by operation of pneumatic components under residual pressure.

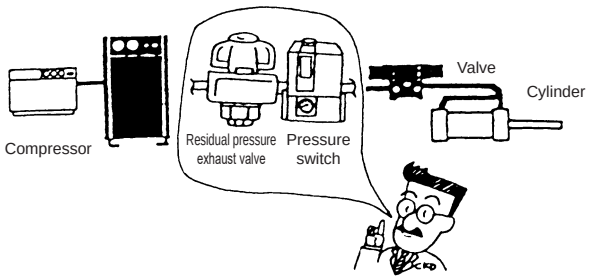

- Confirm whether PTFE can be used.
  The sealant contains PTFE (polytetrafluoroethylene resin) powder. Check that this poses no problems during use.
- Indicate the maintenance conditions in the device's instruction manual.
  - The product's performance may drop too low to maintain an appropriate safety level depending on usage conditions, working environment and maintenance status. With correct maintenance, the product functions can be used to the fullest.
- Consult with CKD if ozone is generated in the supplied air.
- Rubber parts will deteriorate, shortening product life, if ultra dry air is used.

Mounting, installation and adjustment

⚠ CAUTION

■ The needle lock is released when the knob is pulled, and locked when it is pushed.

■ To adjust the flow rate, turn the knob to the right to close or the left to open.

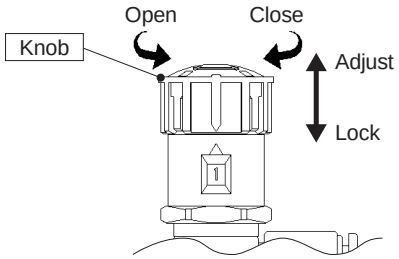

● When opened by rotating the knob on the left hand side, the rotary direction of the dial display is clockwise for standard and counterclockwise for compact.

■ Do not rotate the knob too fast.

● This may result in a distorted dial display or malfunctions.

■ Do not apply rotation torque to the dial display.

● This may result in distorted flow characteristics or malfunctions.

■ After adjustment, push the knob to lock the needle.

■ Controllable range of the needle is from 1 to 7 or 1 to 10 turns; operate with a maximum of 0.05 N·m torque.

Turning the knob beyond the range forcibly may result in distorted flow characteristics or malfunctions.

■ Even when the needle is fully closed, the dial display is not 0.

Calibration of the dial indicator flow rate is performed when the needle is not fully closed. Note that 0 is not necessarily indicated when the needle is fully closed. Beyond "0", "-" is displayed.

■ Rotate the mounting hole section in the non-pressurized state.

■ When mounting on a panel, the stopper ring will interfere with the panel, so insert a flat washer between the mounting hole and panel. (DSC-S)

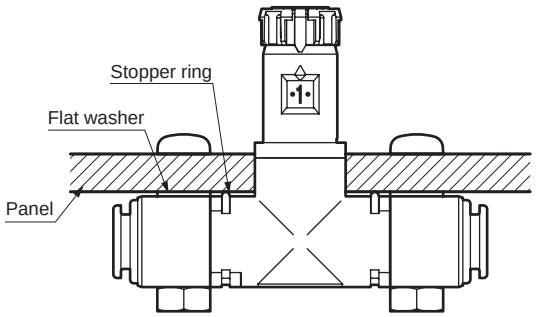

■ Tighten bolts in mounting holes using a torque of 0.8 N·m or less.

■ As tubing may be dislocated due to product oscillation or torsion, fix the product with bolts or Insulok ties, etc., when piping.

■ Fully close the needle, and then open to adjust speed.

● Adjusting with the needle open could cause the actuator to pop out, which is dangerous. Ensure that it is closed and then open it.

● The needle closes when turned to the right and opens when turned to the left.

■ Check the flow direction with the JIS symbol.

If installed in reverse, speed adjustment will not function and the actuator could pop out suddenly, creating a hazard.

■ Confirm the final speed for each usage.

Confirm the final speed after each usage as the variability between products, actuators, conditions of use and ambient temperatures will cause deviations.

■ Install a pneumatic filter before the circuit.

Flow rate will fluctuate due to clogging and foreign matter in the orifice.

■ Use the specified tightening torque (Table 1-(1)) when connecting pipes. To additionally tighten to adjust the position of the rotation indicator window, use the torque in (Table 1-(2)).

Do not hold the knob when piping. Doing so may cause failures. Note that the port size M5 cannot be aligned by additional tightening.

Thread size	(1) Piping (N·m)	(2) Additional tightening (N·m)
M5	1.0 to 1.5	–
R1/8	3 to 5	9 or less
R1/4	6 to 8	14 or less
R3/8	13 to 15	24 or less
R1/2	16 to 18	30 or less

Tightening torque of port thread (Table 1)

■ Securely insert the tube until it contacts the fitting tube end and check that it does not come off the fitting.

■ Do not remove the package or seal cap on the piping port until just before piping the product.

● Removing the piping port cap before piping work may cause foreign matter to enter the pneumatic components from the piping port, resulting in failure or malfunction.

■ When connecting pipes, wrap sealant tape in the opposite direction from the threading, from the inside position to within 2 mm from the pipe end.

● If sealant tape protrudes from the pipe threads, it could be cut when screwing the bolts in. This could cause the tape to enter the valve, causing failures.

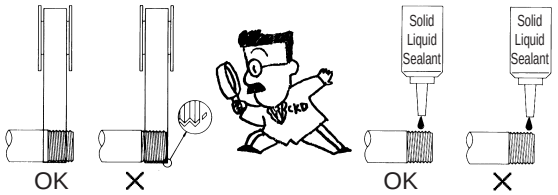

■ Handling push-in fittings and tubes

● For handling push-in fittings and tubes, refer to the warnings and cautions for fittings and tubes in "Pneumatic/ Vacuum/Auxiliary Components (No. CB-24SA)".

■ Always flush just before piping pneumatic components.
- Any foreign matter that has entered during piping must not enter the pneumatic components.

■ When supplying compressed air after connecting pipes, do not suddenly apply high pressure.
- The pipe connection could dislocate, causing the pipe to fly off, leading to accidents.

■ Before supplying compressed air upon connecting pipes, be sure to check for air leaks at the pipe connections.
- Apply a leakage detection agent to pipe connections with a brush and check for air leaks.

■ Connect the piping so that connections are not dislocated by equipment movement, vibration, tension, etc.
- Control of actuator speed will be disabled if piping on the exhaust side of the pneumatic circuit is disengaged.
- When using a chuck holding mechanism, the chuck may be released, creating a hazardous state.

■ Around the pneumatic components, keep space for mounting, removal and piping work.

■ Install a pneumatic filter just before the pneumatic component in the circuit.

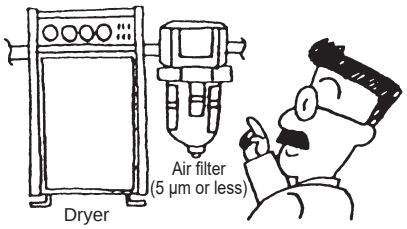

■ Avoid using the product for applications that involve rotation or oscillation.
- Fittings could be damaged.

■ Do not apply lateral load to the body during or after installation.

■ Avoid use in areas with large vibration or impact.

Use/maintenance

⚠ WARNING

■ Before maintenance, stop the air flow and confirm that no pressure remains.

Visualizing flow rate adjustment and control

Rotary needle valves DVL-S and DVL-N with linear flow characteristics indicate the number of dial rotations.
Anyone can adjust cylinder speed and flow rate easily and accurately with good reproducibility.



Use as a speed controller

The standard type has a built-in check valve and can be used as a speed adjustment valve or vacuum breaker valves for pneumatic cylinders.

Oil-prohibited specifications available

These specifications enable use in environments susceptible to oil, in clean rooms and in vacuum applications.

- Adjustment of ionizer purge gas flow rate
- Flow adjustment of vacuum breaker in vacuum conveyance processes
- Cylinder drive
- Air knife
- Transfer of LCD substrates (noncontact)



DVL Series

Industry's first needle valve with dial

Linear flow characteristics

Linear flow characteristics in proportion to number of dial rotations can be provided.

Example of flow characteristics

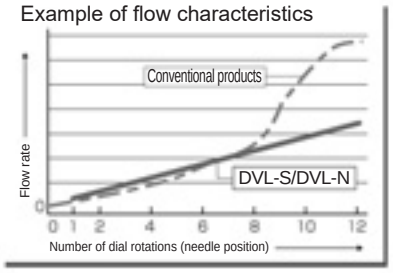

Indicator shows number of rotations

The indicator window shows the number of dial rotations.

Visible control of flow rates

Easy management of flow rate.
The manual operation can now be quantified.



Prevent misadjustment

Value adjustment is easy for anyone at any level. Accurate and reproducible adjustments can minimize errors.

Easy lock

Fixing the needle is easy with the sliding lock lever. This mechanism greatly eases adjustment work.

Reduce work hours

Adjustments can be completed in a short time and hours for setup change or other works are now a thing of the past.

Unrestricted installation

The installation area rotates by 360°, allowing you to freely select the mounting and installation methods as desired from base-mounting, side-mounting and panel-mounting. Mounting brackets are not required.



Example of manifold



Example of base mounting



Example of panel mounting



Seal materials with excellent ozone resistance (oil-prohibition) have been adopted.

RoHS-compliant.

Example of circuit

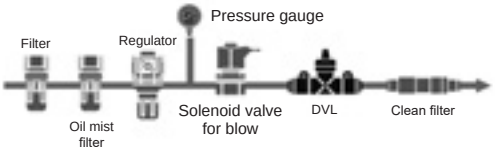

DVL Series products

Series variation	Tube outer diameter	Flow rate range	Applications
Check valve (standard) **DVL-S**	φ4, φ6, φ8, φ10, φ12	20, 80, 160, 240, 400	● Speed control of actuator ● Adjustment of vacuum burst flux of small electronic parts ● Control of pushing force and tension
Needle valve (oil-prohibition) **DVL-N**	φ4, φ6, φ8, φ10, φ12	20, 80, 160, 240, 400	Meeting clean environment and vacuum application requirements ● Flow rate adjustment of floating conveyor ● Flow rate control of ionizer purge gas ● Air blowing on workpiece

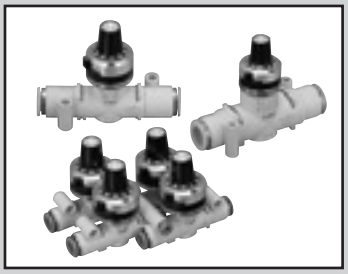

Needle valve with adjusting dial, check valve

DVL-S Series

Needle valve with adjusting dial, needle valve/oil-prohibited

DVL-N Series

● Port size: ø4, ø6, ø8, ø10, ø12

JIS symbol

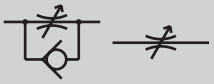

DVL-S DVL-N

RoHS CAD

Specifications

● Needle valve with adjusting dial, check valve DVL-S

Item		DVL-S-06					DVL-S-08		DVL-S-10		
		020		080		160	240		400		
Compatible tube O.D.	mm	ø4	ø6	ø4	ø6	ø6	ø6	ø8	ø8	ø10	ø12
Working fluid		Compressed air									
Max. working pressure	MPa	1.0 (≈150 psi, 10 bar)									
Min. working pressure	MPa	0.1 (≈15 psi, 1 bar) (*3)									
Proof pressure	MPa	1.5 (≈220 psi, 15 bar)									
Fluid temperature	°C	5 (41°F) to 60 (140°F) (no freezing. *2)									
Ambient temperature	°C	0 (32°F) to 60 (140°F) (no freezing)									
Weight	g	54	48	54	48	48	60	61	82	86	88
Needle control range		1 to 12 rotations					1 to 13 rotations				
Free flow	Flow rate ℓ/min(ANR)	170	300	170	300	300	400	550	900	1100	1200
	Eff. X-sectional area mm^2	2.5	4.5	2.5	4.5	4.5	6	8	13.5	16.5	18
Controlled flow	Flow rate ℓ/min(ANR)	18		80		160	240		440		
	Eff. X-sectional area mm^2	0.25		1.2		2.4	3.6		6.6		

*1: Flow rate is the atmospheric pressure conversion at 0.5 MPa.
*2: Freezing may occur due to adiabatic expansion depending on the air quality (dew point).
*3: Evacuating up to -100 kPa is possible only in the direction of free flow. (Needle control is not available)

● Needle valve with adjusting dial, needle valve/oil-prohibited DVL-N

Item	DVL-N-06					DVL-N-08		DVL-N-10		
	020		080		160	240		400		
Compatible tube O.D. mm	ø4	ø6	ø4	ø6	ø6	ø6	ø8	ø8	ø10	ø12
Working fluid	Compressed air/N_2 gas/low vacuum									
Max. working pressure MPa	0.7 (≈100 psi, 7 bar)									
Negative pressure kPa	-100 (≈-15 psi, -1 bar)									
Proof pressure MPa	1.5 (≈220 psi, 15 bar)									
Fluid temperature °C	5 (41°F) to 60 (140°F) (no freezing. *2)									
Ambient temperature °C	0 (32°F) to 60 (140°F) (no freezing)									
Weight g	54	48	54	48	48	60	61	82	86	88
Needle control range	1 to 12 rotations					1 to 13 rotations				
Flow rate ℓ/min(ANR)	18		80		160	240		440		
Effective cross-sectional area mm^2	0.25		1.2		2.4	3.6		6.6		

*1: Flow rate is the atmospheric pressure conversion at 0.5 MPa.
*2: Freezing may occur due to adiabatic expansion depending on the air quality (dew point).

How to order

DVL - S - 06 - H66 - 020

Model No.

Ⓐ Control method

Ⓑ Body size

Ⓒ Compatible tube O.D.

Refer to the table below for the body size, Compatible tube O.D. and flow rate combination.

Ⓓ Flow rate

Code	Description
Ⓐ Control method (oil removal)	
S	Check valve
N	Needle valve (oil-prohibited)
Ⓑ Body size	
06	1/8 thread equivalent
08	1/4 thread equivalent
10	3/8 thread equivalent
Ⓒ Compatible tube O.D.	
H44	ø4
H66	ø6
H88	ø8
H1010	ø10
H1212	ø12
Ⓓ Flow rate	***1**
020	18 ℓ/min(ANR)
080	80 ℓ/min(ANR)
160	160 ℓ/min(ANR)
240	240 ℓ/min(ANR)
400	440 ℓ/min(ANR)

Precautions for model No. selection

*1: The flow rate is the guide value at 0.5 MPa.
*2: DVL-S and DVL-N can be identified with the color of the push ring.
DVL-S: White
DVL-N: Blue

Combination of body size, Compatible tube O.D., and flow rate

	Ⓑ Body size						
	06		08		10		
Ⓒ Compatible tube O.D. / Ⓓ Flow rate	H44	H66	H66	H88	H88	H1010	H1212
020	●	●					
080	●	●					
160		●					
240			●	●			
400					●	●	●

Flow characteristics

*The flow characteristics graph gives reference values and does not guarantee the values.

● DVL-*-020

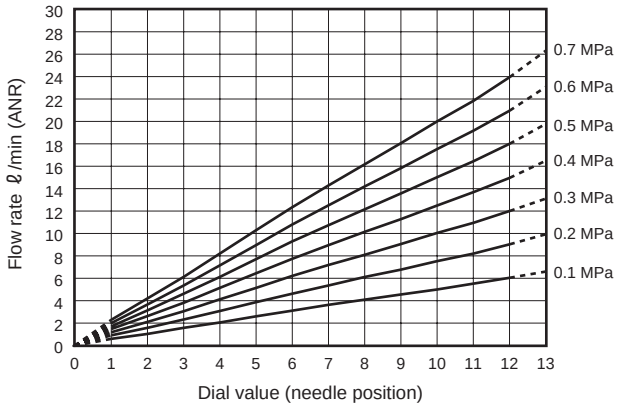

● DVL-*-080

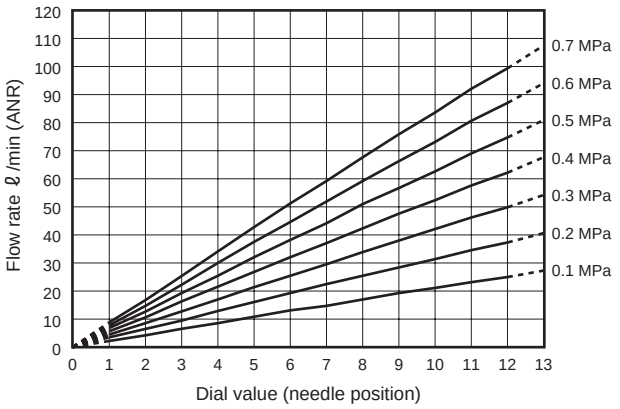

● DVL-*-160

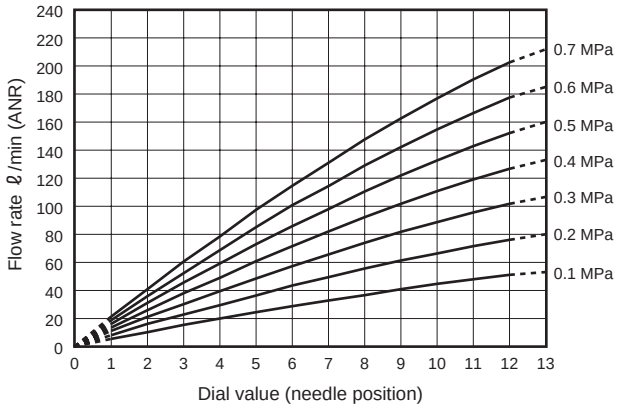

● DVL-*-240

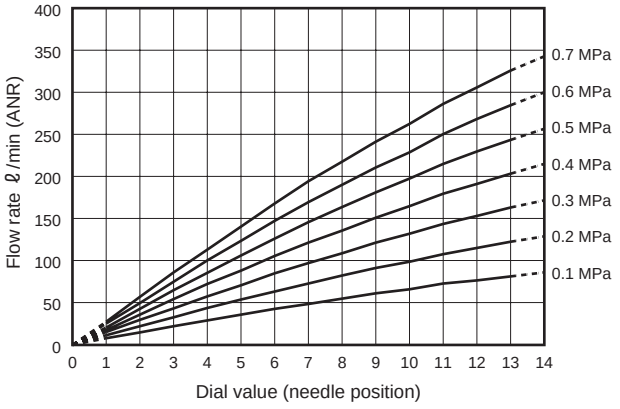

● DVL-*-400

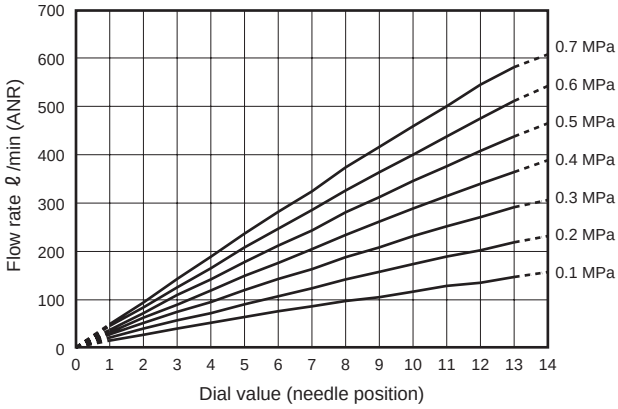

Internal structure and parts list

● DVL-S

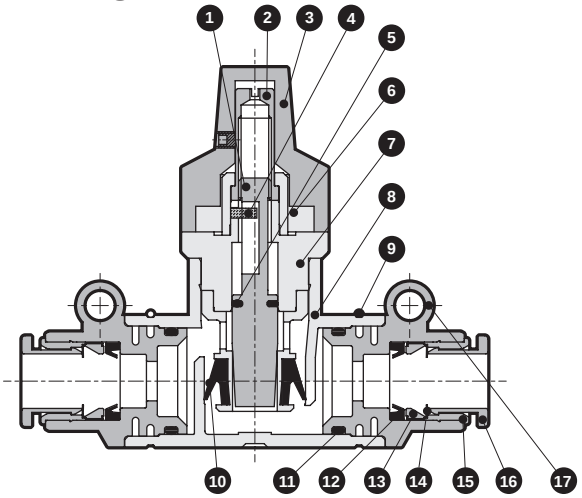

Part No.	Part name	Material
1	Needle	Brass
2	Rotary shaft	Brass
3	Dial	Aluminum alloy, polyamide, etc.
4	Parallel pin	Stainless steel
5	O-ring	Nitrile rubber
6	Guide bush	Brass
7	Check bracket	Brass
8	Body	Polybutylene terephthalate
9	Stopper ring	Stainless steel
10	Check packing	Hydrogenated nitrile rubber
11	O-ring	Nitrile rubber
12	Packing	Nitrile rubber
13	Holder	Brass or polyether sulfone
14	Chuck	Stainless steel
15	Outer ring	Brass
16	Push ring	Polybutylene terephthalate or polyacetal
17	Joint case	Polybutylene terephthalate

*1: All the brass parts have electroless nickel plating.
*2: Some structures differ depending on the type. (No material changed)

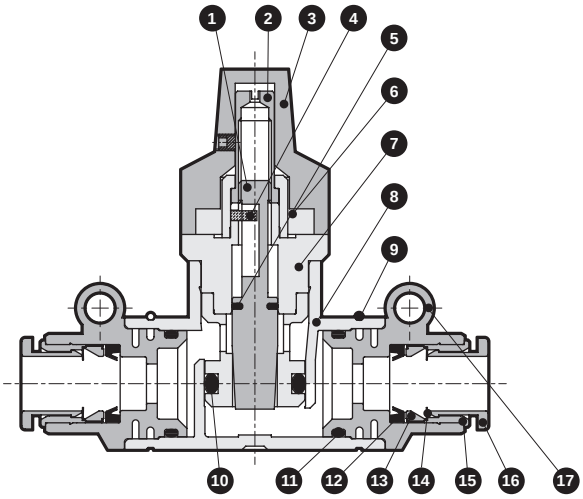

Part No.	Part name	Material
1	Needle	Brass
2	Rotary shaft	Brass
3	Dial	Aluminum alloy, polyamide, etc.
4	Parallel pin	Stainless steel
5	O-ring	Fluoro rubber
6	Guide bush	Brass
7	Check bracket	Brass
8	Body	Polybutylene terephthalate
9	Stopper ring	Stainless steel
10	O-ring	Hydrogenated nitrile rubber
11	O-ring	Hydrogenated nitrile rubber
12	Packing	Hydrogenated nitrile rubber
13	Holder	Brass or polyether sulfone
14	Chuck	Stainless steel
15	Outer ring	Brass
16	Push ring	Polybutylene terephthalate or polyacetal
17	Joint case	Polybutylene terephthalate

*1: All the brass parts have electroless nickel plating.
*2: Some structures differ depending on the type. (No material changed)

Dimensions

CAD

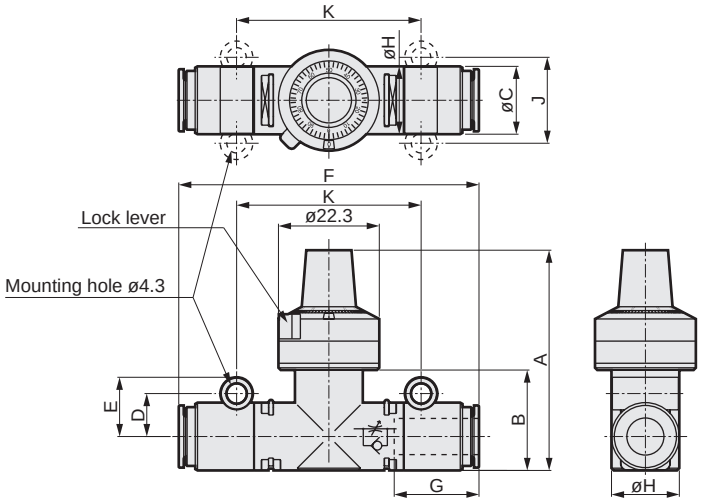

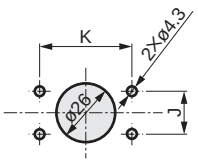

Panel mounting dimensions

Model No.	Compatible tube O.D.	A	B	C	D	E	F	H	J	K	G (tube insert length)
DVL-*-06-H44-*	ø4	45.5	17	12	8.1	11.6	55	12	16.2	30.8	12.9
DVL-*-06-H66-*	ø6						49.5				13.7
DVL-*-08-H66-*	ø6	50	22.5	13	9.5	13.1	64	15	19	41	18
DVL-*-08-H88-*	ø8			15			66.5				19
DVL-*-10-H88-*	ø8	58	29		11.5	15.1	71	20	23	47	
DVL-*-10-H1010-*	ø10			18			75				21
DVL-*-10-H1212-*	ø12			20.4			79				22

Safety Precautions

Be sure to read this section before use.
Refer to Intro Page 63 for precautions for general pneumatic components.

Product-specific cautions: Needle valve with dial

Design/selection

⚠ CAUTION

■ This valve cannot be used as a stop valve that requires no leakage.
Slight leakage is allowed for in this product's specifications.

■ Note that the flow rate may differ from the values on page 712 depending on the piping conditions around the unit and the temperature changes.

■ Dust cannot be completely kept out of the flow path.
Even when using oil-prohibited models, install a final clean filter if dust could be a problem with the circuit.

■ Oil-prohibited specifications apply for fluid passage section only.
Do not wash this product, because grease is used for the internal parts except for the wetted sections.

■ Do not use this valve in circuits where ozone is generated intentionally. Ozone resistance is sufficient for naturally occurring ambient ozone. Packing deteriorates if ozone levels are high.

■ Use the product in the range of conditions specified for the product. Consult with CKD when using the product for special applications.
- Use of the product exceeding the specifications range may result in insufficient performance, and its safety cannot be guaranteed.
- This product may not be usable in special applications and environments.
  For example, use in applications requiring safety, including nuclear energy, railways, aircraft, vehicles, medical devices, devices in contact with beverages or foodstuffs, amusement devices, emergency cutoff circuits, press machines, brake circuits, or safety devices or applications.

■ Confirm before use that the product will withstand the working environment.
- This product cannot be used in environments where functional obstacles could occur. Such environments include high temperatures, chemical atmospheres, or where chemical liquids, vibration, moisture, water dripping or gas is present. Environments where ozone is generated.
- Do not use the product in a place where it could directly contact coolant or spatter, etc.

Mounting, installation and adjustment

⚠ CAUTION

■ To adjust the flow rate, turn the dial to the right to open or the left to close.

■ After adjustment, lock the dial with the sliding lock lever.

■ The flow rate control range is from "1" to "12" or "13" on the dial rotation display. Do not set the flow rate outside this range. Turning the dial to the fully closed or fully open position forcibly may result in failure or abnormal flow characteristics.

■ Even when the needle is fully closed, the dial display is not "0".
Calibration of the dial indicator flow rate is performed when the needle is not fully closed. Note that 0 is not necessarily indicated when the needle is fully closed. After "0", either "19" or no number at all is displayed.

■ Do not remove the dial from the body.
If the dial is removed, readjustment and calibration of flow characteristics cannot be performed.

■ Install a pneumatic filter before the circuit.
Flow rate fluctuates due to clogging and foreign matter in the orifice.

Mounting, installation and adjustment

■ The dial of the DVL-N is slightly stiff.
Because of the oil-prohibited specifications, dial movement may be slightly stiffer than with the DVL-S.

■ Rotate the mounting hole section at the no pressurized state.

■ The mounting hole of the DVL-N is slightly stiff.
Because of the oil-prohibited specifications, movement of the rotary mounting hole will be stiffer than the DVL-S.

■ When mounting on a panel, the stopper ring will interfere with the panel, so insert a flat washer between the mounting hole and panel.

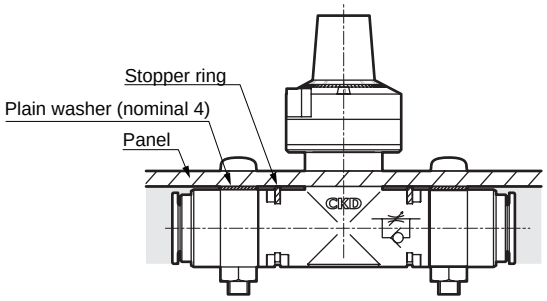

■ When piping, fix the product with a bolt or cable tie.
Movement or displacement of the product may cause disconnection of the tube.

■ Tightening torque should be 0.8 N·m when tightening the bolt to the mounting hole.

■ There is no direction for needle valve piping.

■ Stop air flow and confirm that there is no residual pressure before replacing the tube.

■ Handling push-in fittings and tubes
For handling push-in fittings and tubes, refer to the warnings and cautions for fittings and tubes in “Pneumatic/Vacuum/ Auxiliary Components (No. CB-24SA)”.

■ When supplying compressed air after connecting pipes, do not suddenly apply high pressure.
The pipe connection could dislocate causing the pipe tube to fly out and result in accidents.

■ After connecting the pipes, check pipe connections for air leaks before supplying compressed air.
Apply a leakage detection agent on pipe connections with a brush and check for air leaks.

■ Connect the piping so that connections are not dislocated by equipment movement, vibration, tension, etc.

■ Around the pneumatic components, keep space for installation, removal and piping work.

■ Avoid using the product for applications that involve continuous rotation or oscillations.
Fittings could be damaged.

■ Avoid use in areas with large vibration or impact.

Controlling the actuator’s speed

■ Adjust the final speed after each use.
Check the final speed after each use since it should be adjusted depending on individual variability of the products, actuators, use condition and ambient temperature.
Aging of the actuator may cause speed to fluctuate greatly.

■ Check the flow direction with the JIS symbol.
If installed in reverse, speed adjustment will not function and the actuator could pop out, creating a hazard.

■ Adjust speeds by first almost closing the needle and then by opening it.
If the needle is fully open, the actuator could suddenly and dangerously pop out.

■ Understand compressed air features before designing a pneumatic circuit.

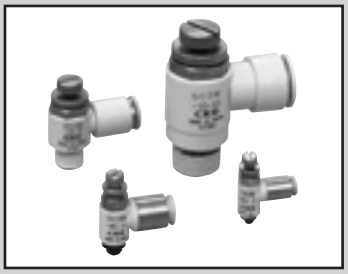

Speed controller, elbow with push-in fitting

SC3W Series

● Port size: M3, M5, R1/8 to R1/2

JIS symbol


(Meter-out)


(Meter-in)

RoHS CAD

Specifications

Item		SC3W																	
		SC3W-M3		SC3W-M5			SC3W-6			SC3W-8			SC3W-10				SC3W-15	
Compatible tube O.D. mm		ø3.2	ø4	ø3.2	ø4	ø6	ø4	ø6	ø8	ø6	ø8	ø10	ø6	ø8	ø10	ø12	ø10	ø12
Working fluid		Compressed air																
Max. working pressure MPa		1.0 (≈150 psi, 10 bar)																
Min. working pressure MPa		0.05 (≈7.3 psi, 0.5 bar)																
Proof pressure MPa		1.5 (≈220 psi, 15 bar)																
Fluid temperature °C		5 (41°F) to 60 (140°F) (no freezing. *3)																
Ambient temperature °C		0 (32°F) to 60 (140°F) (no freezing)																
Port size		M3		M5			R1/8			R1/4			R3/8				R1/2	
Weight g		4.9	5.7	7.9	8.8	9.6	25	26	27	50	51	54	63.7	75	78	81	134	138
Dial value (needle position) (times)		10 (14) or more		10 (16) or more			10 (15) or more			13 or more			13 or more				14 or more	
Free flow	Flow rate ℓ/min(ANR)	27(20)		87(80)			210(210)	270(270)	270	470	500	530	650	1000	1100		1500	1600
	Eff. X-sectional area mm²	0.4(0.3)		1.3(1.2)			3.2(3.2)	4.0(4.0)	4.0	7	7.5	8	10	15	16		22	24
Controlled flow	Flow rate ℓ/min(ANR)	20(5.9)		80(6.7)			190(13)	240(13)	240	430	470	470	650	930	1000		1500	1600
	Eff. X-sectional area mm²	0.3(0.08)		1.2(0.1)			2.8(0.2)	3.6(0.2)	3.6	6.5	7	7.0	10	14	15		22	24

*1: Flow rate is the atmospheric pressure conversion value at pressure 0.5 MPa.
*2: Values in ( ) indicate low speed.
*3: Freezing may occur due to adiabatic expansion depending on the air quality (dew point).

Flow characteristics

● Standard (port size M3, M5)

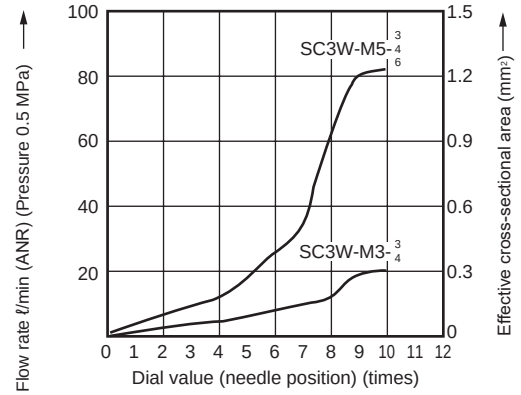

● Standard (port size 6)

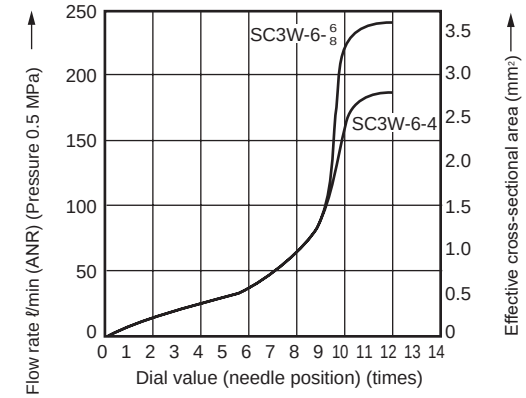

● Standard (port size 8, 10, 15)

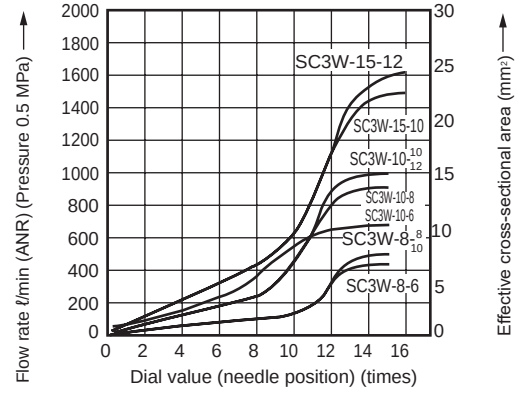

● Low speed

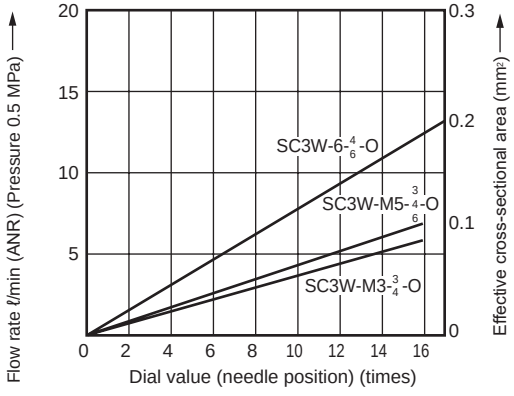

How to order

SC3W - M5 - 4 - I

Model No.

Ⓐ Port size

Ⓑ Compatible tube O.D.

Ⓒ Option *1 *2 *3

Code	Description
Ⓐ Port size	
M3	M3x0.5
M5	M5x0.8
6	R1/8
8	R1/4
10	R3/8
15	R1/2

Ⓑ Compatible tube O.D.

		Piping size					
		M3	M5	6	8	10	15
3	ø3.2	●	●				
4	ø4	●	●	●			
6	ø6		●	●	●	●	
8	ø8			●	●	●	
10	ø10				●	●	●
12	ø12					●	●

Ⓒ Option

Blank	Meter-out
I	Meter-in (Push ring color: black)
K	Hexagon lock nut
O	Low speed
P6	Copper and PTFE free specifications

Not available

⚠ Precautions for model No. selection

*1: The options are listed in alphabetical order.
*2: "K" can be selected for port sizes M3 and M5 only.
*3: "O" can be selected for Compatible tube O.D. "4" (ø4), "6" (ø6) and port size M3, M5 and "6" (R1/8) only.

[Example of model No.]

SC3W-M5-4-I

Ⓐ Port size : M5x0.8
Ⓑ Compatible tube O.D.: ø4
Ⓒ Option : meter-in

Ozone-proof specifications

(Ending Page 9)

SC3W−……−P11

Clean-room specifications

(Catalog No. CB-033SA)

● Anti-dust generation structure for use in cleanrooms

SC3W−……−P7*

Specifications for rechargeable battery

(Catalog No. CC-1226A)

● Structure compatible with rechargeable battery manufacturing process

SC3W−……−P4

Internal structure and parts list

● Port size: M3, M5

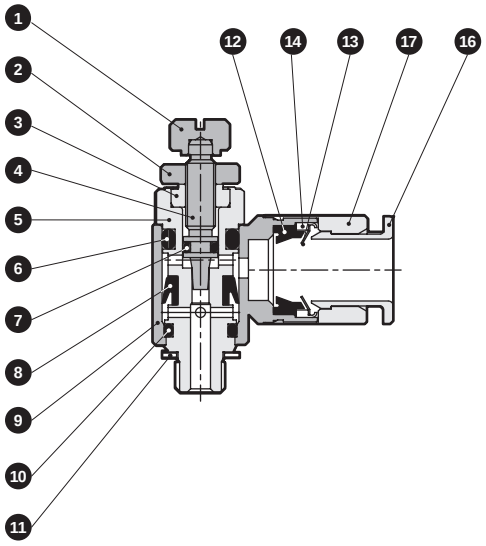

● Port size: 6, 10 (φ6 only)

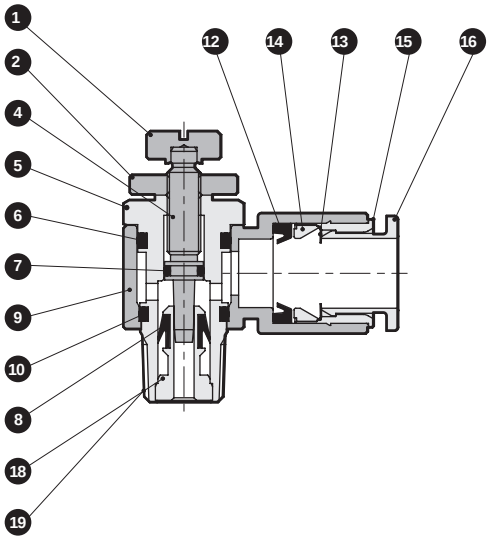

● Port size: 8, 10, 15

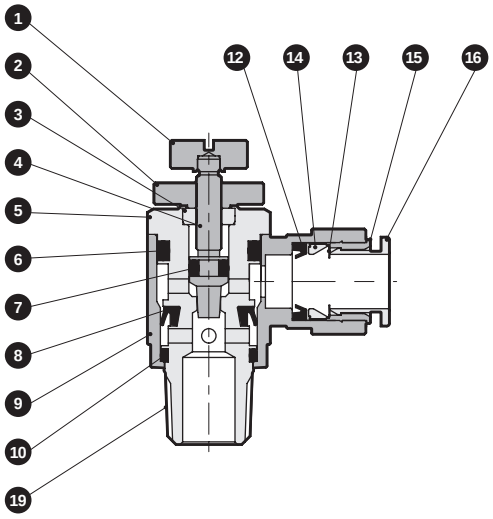

Part No.	Part name	Material	Part No.	Part name	Material
1	Knob	Brass	11	Gasket	Steel + nitrile rubber (M5 only)
2	Lock nut	Brass	12	Packing	Nitrile rubber
3	Gland nut	Brass	13	Chuck	Stainless steel
4	Needle	Stainless steel	14	Chuck holder	M3,M5: Brass
5	Rotary shaft	Brass (M3, stainless steel)			R1/8 up: polyether sulfone
6	O-ring	Nitrile rubber	15	Outer ring	Brass
7	O-ring	Nitrile rubber	16	Push ring	Polybutylene terephthalate (flame-resistant resin *2)
8	Packing	Hydrogenated nitrile rubber	17	Fitting body	Copper alloy
9	Rotor	Polybutylene terephthalate (flame-resistant resin *2)	18	Check part	Brass
10	O-ring	Nitrile rubber	19	Sealant	Fluorinated resin

*1 All the brass parts have electroless nickel plating.
*2 UL94 Standards V-0 equivalent

Dimensions

● SC3W-M -* 3 / 5

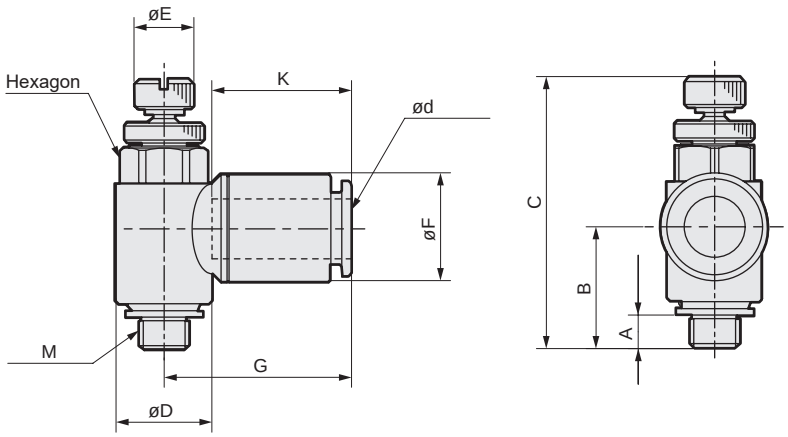

Model No.	ød (Compatible tube O.D.)	M	A	B	C		D	E	F	G	K (tube insert length)	Hexagon
					MAX	MIN						
SC3W-M3-3	ø3.2	M 3 x 0.5	2.4	11.4	27.6	25.1	7.4	5	7.5	15.5	11.7	7
SC3W-M3-4	ø4	M 3 x 0.5	2.4	11.4	27.6	25.1	7.4	5	8.8	16.6	12.9	7
SC3W-M5-3	ø3.2	M 5 x 0.8	3.4	12.4	30.6	27.2	9.6	6	7.5	16.0	11.7	8
SC3W-M5-4	ø4	M 5 x 0.8	3.4	12.4	30.6	27.2	9.6	6	8.8	17.2	12.9	8
SC3W-M5-6	ø6	M 5 x 0.8	3.4	12.4	30.6	27.2	9.6	6	10.8	18.8	14.0	8

● SC3W- 6 / 8 / 10 / 15 -* (same as low speed/standard (SC3W-6))

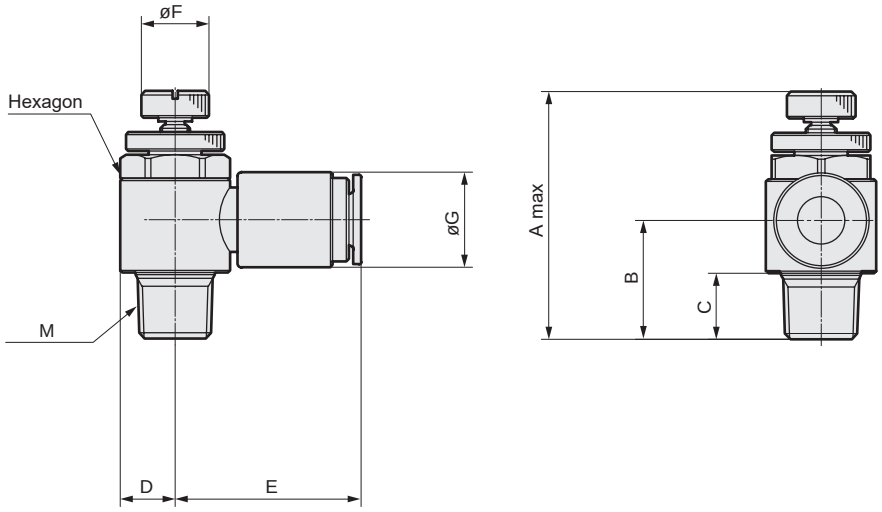

Model No.	M	Compatible tube O.D.	A	B	C	D	E	F	G	Hexagon
SC3W-6-4	R 1/8	ø4	38.4	16.2	8	7.3	23.1	9	10.0	13
SC3W-6-6		ø6	38.4	15.7	8	7.3	24.1	9	12.5	13
SC3W-6-8		ø8	38.4	15.4	8	7.3	25.3	9	14.5	13
SC3W-8-6	R 1/4	ø6	51.2	25	11	9.5	26.7	12	13.8	17
SC3W-8-8		ø8	51.2	25	11	9.5	27.7	12	16.3	17
SC3W-8-10		ø10	51.2	24	11	9.5	30.5	12	19.3	17
SC3W-10-6	R 3/8	ø6	52.4	23.1	12	11.3	28.3	14	12.5	19
SC3W-10-8		ø8	60.2	30.0	12	11.3	29.4	14	16.3	19
SC3W-10-10		ø10	60.2	30.0	12	11.3	32.2	14	19.3	19
SC3W-10-12		ø12	60.2	29.3	12	11.3	35.4	14	21.3	19
SC3W-15-10	R 1/2	ø10	66.7	33.8	15	13.5	34.5	16	19.3	24
SC3W-15-12		ø12	66.7	33.8	15	13.5	37.7	16	21.3	24



Speed controller/
universal with push-in fitting

SC3U Series

● Port size: M3, M5, R1/8 to R1/2

JIS symbol

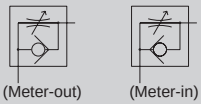

RoHS CAD

Features

● The piping direction can be set at any angle on the universal.

● Flame-resistant resin used
Flame-resistant PBT (UL94 Standards V-0 or equivalent) used as standard.

● The port threads are coated with fluorine-based resin sealant.

Specifications

Item		SC3U-M3		SC3U-M5			SC3U-6			SC3U-8			SC3U-10			SC3U-15	
Compatible tube O.D.mm		ø3.2	ø4	ø3.2	ø4	ø6	ø4	ø6	ø8	ø6	ø8	ø10	ø8	ø10	ø12	ø10	ø12
Working fluid		Compressed air															
Max. working pressure MPa		1.0 (≈150 psi, 10 bar)															
Min. working pressure MPa		0.05 (≈7.3 psi, 0.5 bar)															
Proof pressure MPa		1.5 (≈220 psi, 15 bar)															
Fluid temperature °C		5 (41°F) to 60 (140°F) (no freezing. *3)															
Ambient temperature °C		0 (32°F) to 60 (140°F) (no freezing)															
Port size		M3		M5			R1/8			R1/4			R3/8			R1/2	
Weight g		6.3	7.2	10	11	12	24	26	27	52	54	57	83	85	87	140	143
Dial value (needle position)		10 (14) or more		10 (16) or more			10 (15) or more		10 or more	13 or more			13 or more			14 or more	
Free flow	Flow rate ℓ/min(ANR)	31 (24)		95 (95)		105 (95)	215 (215)	270 (245)	270	475	510	540	985	1090		1500	1630
	Effective cross-sectional area mm²	0.45 (0.35)		1.4 (1.4)		1.6 (1.4)	3.2 (3.2)	4 (3.7)	4	7	7.5	8	14.5	16		22	24
Controlled flow	Flow rate ℓ/min(ANR)	34 (5.4)		95 (9.5)			190 (17)	260 (17)	260	440	475		950	1150	1220	1500	1630
	Effective cross-sectional area mm²	0.5 (0.08)		1.4 (0.14)			2.8 (0.25)	3.8 (0.25)	3.8	6.5	7		14	17	18	22	24

*1: Flow rate is the atmospheric pressure conversion value at pressure 0.5 MPa.
*2: Values in ( ) indicate low speed.
*3: Freezing may occur due to adiabatic expansion depending on the air quality (dew point).

How to order

SC3U - M5 - 4 - I

- SC3U: Model No.
- M5: Ⓐ Port size
- 4: Ⓑ Compatible tube O.D.
- I: Ⓒ Option *1 *2 *3

Code	Description
Ⓐ Port size	
M3	M3x0.5
M5	M5x0.8
6	R1/8
8	R1/4
10	R3/8
15	R1/2

Ⓑ Compatible tube O.D.

		Piping size					
		M3	M5	6	8	10	15
3	ø3.2	●	●				
4	ø4	●	●	●			
6	ø6		●	●	●		
8	ø8			●	●	●	
10	ø10				●	●	●
12	ø12					●	●

Ⓒ Option

Blank	Meter-out
I	Meter-in (Push ring color: black)
K	Hexagon lock nut
O	Low speed
P6	Copper and PTFE free specifications

Not available

⚠ Precautions for model No. selection

*1: The options are listed in alphabetical order.
*2: "K" can be selected for port sizes M3 and M5 only.
*3: "O" can be selected for compatible tube O.D. "4" (ø4), "6" (ø6) and port size M3, M5 and "6" (R1/8) only.

[Example of model No.]

SC3U-M5-4-I

Ⓐ Port size : M5 x 0.8
Ⓑ Compatible tube O.D.: ø4
Ⓒ Option : Meter-in

Ozone-proof specifications (made-to-order product)

SC3U – ..... – P11

Flow characteristics

● Standard (port size M3, M5)

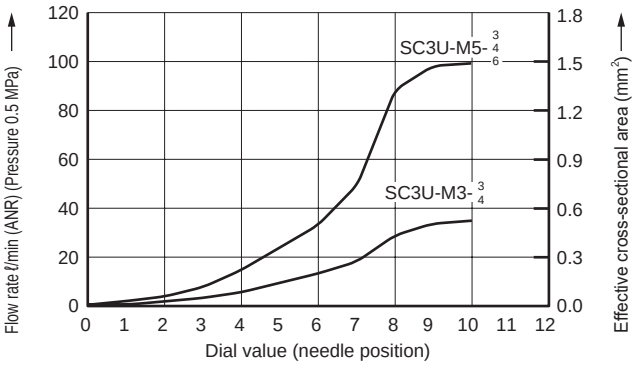

● Standard (port size 6)

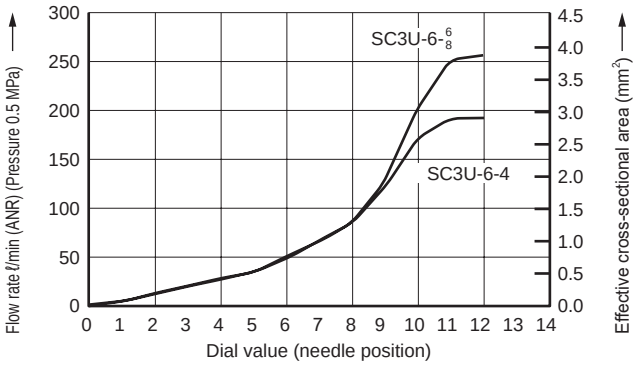

● Standard (port size 8, 10, 15)

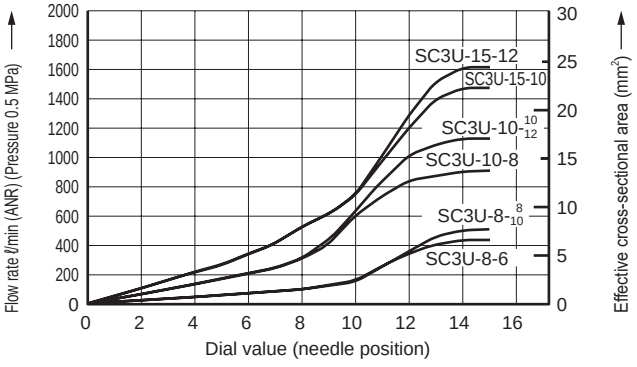

● Low speed

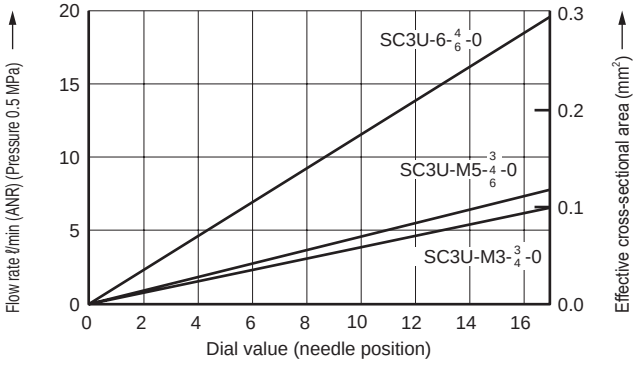

Internal structure and parts list

● SC3U- M3 / M5 -*

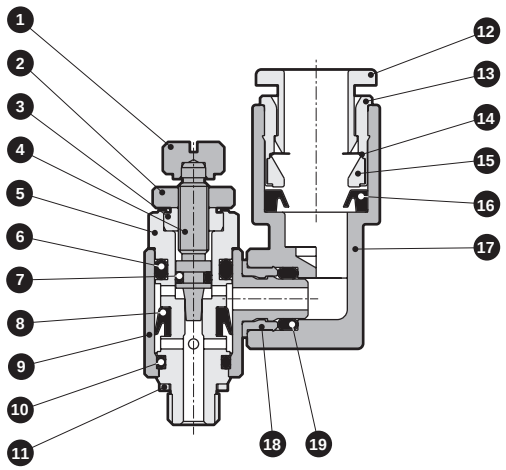

● SC3U-6-*

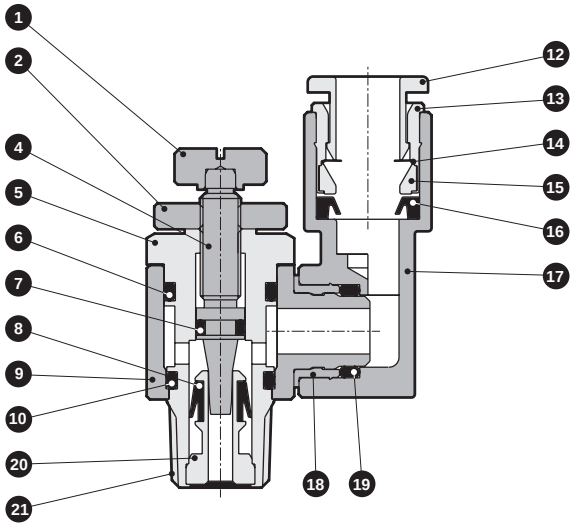

● SC3U- 8 / 10 / 15 -*

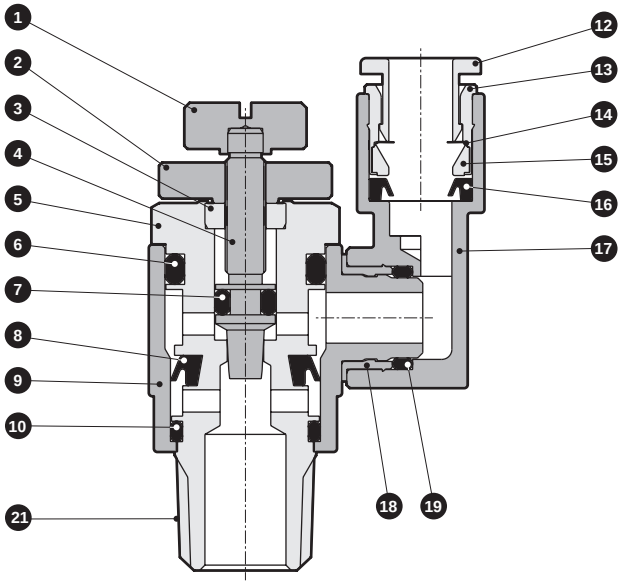

Part No.	Part name	Material
1	Knob	Brass
2	Lock nut	Brass
3	Gland nut	Brass
4	Needle	Stainless steel
5	Rotary shaft	Brass (M3, stainless steel)
6	O-ring	Nitrile rubber
7	O-ring	Nitrile rubber
8	V packing	Hydrogenated nitrile rubber
9	Rotor	Polybutylene terephthalate (flame-resistant resin *2)
10	O-ring	Nitrile rubber

Part No.	Part name	Material
11	Gasket	Stainless steel + nitrile rubber
12	Push ring	Polybutylene terephthalate (flame-resistant resin *2)
13	Outer ring	Brass
14	Chuck	Stainless steel
15	Chuck holder	Polyether sulfone (compatible tube O.D. ø3.2 is brass)
16	Packing	Nitrile rubber
17	Fitting body	Polybutylene terephthalate (flame-resistant resin *2)
18	Stopper	Brass
19	O-ring	Nitrile rubber
20	Check part	Brass
21	Sealant	Fluorinated resin

*1 All the brass parts have electroless nickel plating.
*2 UL94 Standards V-0 equivalent

Dimensions

● SC3U-*-* (the dimensions are the same for the standard and low speed)

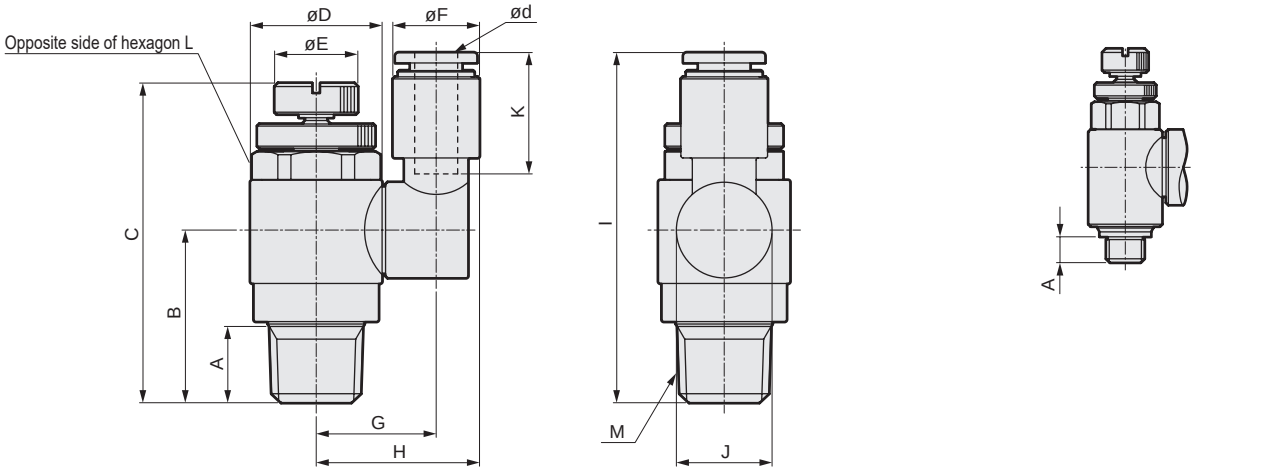

● - Dimension A of SC3U- M3 / M5

Code / Model No.	ød (Tube O.D.)	M	A	B	C MAX	C MIN	D	E	F	G	H	I	J	K (tube insert leng)	L Hexagon
SC3U-M3-3	ø3.2	M3x0.5	2.4	11.4	28.5	26	7.4	5	8.5	10	14.3	28.9	9.8	12.5	7
SC3U-M3-4	ø4								10		15	32.5		16	
SC3U-M5-3	ø3.2	M5x0.8	3.4	12.4	30.8	27.8	9.6	6	8.5	11.1	15.4	30	9.8	12.5	8
SC3U-M5-4	ø4								10		16.1	33.5		16	
SC3U-M5-6	ø6								12.5	12.1	18.4	35		17.5	
SC3U-6-4	ø4	R1/8	8	15.4	39.2	33.4	14.5	9	10	14.5	19.5	39	13	16	13
SC3U-6-6	ø6								12.5	14.6	20.8	40.5		17.5	
SC3U-6-8	ø8								14.5	15.6	22.8	42		19	
SC3U-8-6	ø6	R1/4	11	24.9	51.2	46.1	19	12	12.5	17.3	23.6	50.5	13.8	17.5	17
SC3U-8-8	ø8								14.5	17.8	25.1	52		19	
SC3U-8-10	ø10								17.5	19.3	28.1	55.5		21.5	
SC3U-10-8	ø8	R3/8	12	29.8	60.2	53.1	22.5	14	14.5	19.6	26.8	57.9	16.7	19	19
SC3U-10-10	ø10								17.5	21.1	29.8	60.9		21.5	
SC3U-10-12	ø12								20	22.3	32.3	63.2		23	
SC3U-15-10	ø10	R1/2	15	33.8	66.7	59.1	27	16	17.5	23.3	32.1	65.9	18.8	21.5	24
SC3U-15-12	ø12								20	24.5	34.5	68.2		23	

Safety precautions

⚠CAUTION

■ Safety precautions

- Always use within the product specifications.
- This product is used for compressed air. Do not use this unit for other fluids.
- Securely insert the tube to the tube end and make sure that the tube cannot be pulled out.
- Cut the tube with a dedicated cutter and always at a right angle.
- Remove all cutting chips and foreign matter generated during piping and tube insertion before starting use.
- Provide sufficient allowance in the tube so that it does not bend sharply.
- Avoid using this product in hot humid places, outdoors or where it is subject to direct sunlight.
- Do not use the product in a place where it could come in direct contact with coolant or spatter, etc.
- Avoid using this product in places with high levels of vibration or impact.
- The needle tolerates a slight leak even when fully closed, so do not use it as a stop valve.
- Consult with CKD for use in special environments.

■ Precautions for piping

- Always use within the recommended tightening torque range.
- Do not tighten while pressure is applied.
- Stop air flow and confirm that there is no residual pressure before replacing the tube.
- Mounting in an arbitrary direction is possible by rotating the unit 360°, but do not use this product in applications involving constant rotation or oscillation.
- Do not apply load other than what is required for rotating onto the rotator and fitting connection.

Port thread	Tightening torque N·m
M3	0.3 to 0.6
M5	1.0 to 1.5
Rc1/8	3 to 5
Rc1/4	6 to 8
Rc3/8	13 to 15
Rc1/2	16 to 18

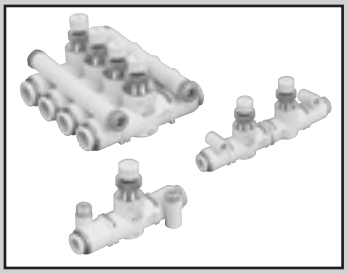

Speed controller Line type with push-in fitting

SCL2 Series

In/out speed controller Inline with push-in fitting

SCD2 Series

● Port size: ø1.8/ø4/ø6/ø8/ø10/ø12

JIS symbol

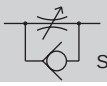

SCL2 Series

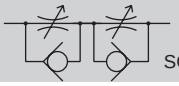

SCD2 Series

Overview

● The SCL2 Series is an inline speed controller useful for remote or centralized actuator control.
● The SCD2 Series is an integrated metering in/out speed controller that controls both air intake and exhaust flow rates. Depending on the circuit, the actuator can be prevented from popping out, speed can be stabilized and the reciprocating single acting cylinder speed can be controlled.

Features

Unrestricted mounting

The installation area rotates by 360°, enabling mounting and installation method to be from base, side, or panel. Mounting brackets are not required.

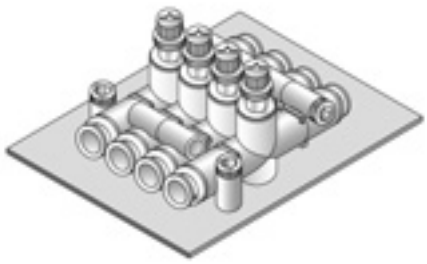

Example of base mounting

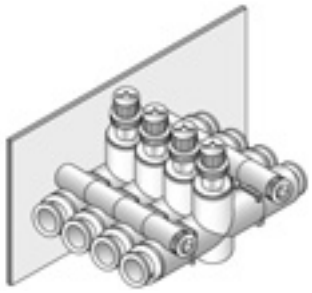

Example of wall mounting

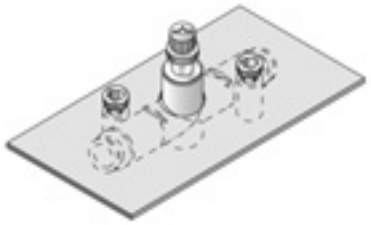

Example of panel mounting

Wide range of choices

Fiber tubing specifications and large bore have been added to the diverse lineup, expanding the size of compatible tubing to ø1.8 to ø12 diameter.

Large flow rate with compact

The max. flow rate achieved even with a compact body extends the selection range for cylinder size and speed control.

Fine speed available

Simple speed control for low and fine speed areas as well as small bore size cylinders.

Push-in connection

Push-in fittings simplify tubing connections.

Standard ozone-resistant materials

Ozone-resistant materials are used as standard for check packing to prevent deterioration of product.

Standard flame-resistant resin: UL94 Standard V-0 or equivalent

Refer to page 733 for SCL2/SCD2 Series Safety Precautions.

Specifications

● Speed controller Line type SCL2

Model No.			SCL2-04			SCL2-06	SCL2-08		SCL2-10		
Compatible tube O.D.		mm	ø1.8	ø1.8/ø4	ø4	ø6	ø6	ø8	ø8	ø10	ø12
Working fluid			Compressed air								
Max. working pressure		MPa	0.7 (≈100 psi, 7 bar)		1.0 (≈150 psi, 10 bar)						
Min. working pressure		MPa	0.1 (≈15 psi, 1 bar)								
Proof pressure		MPa	1.05 (≈150 psi, 10.5 bar)		1.5 (≈220 psi, 15 bar)						
Fluid temperature		°C	5 (41°F) to 60 (140°F) (no freezing. *3)								
Ambient temperature		°C	0 (32°F) to 60 (140°F) (no freezing)								
Weight		g	13	12	11.5	16	32	33	53	57	59
Dial value (needle position)			12 [15]								
Free flow	Flow rate	ℓ/min(ANR)	[13]		130	300	400	550	900	1100	1200
	Effective cross-sectional area	mm^2	[0.2]		1.9	4.5	6	8	13.5	16.5	18
Controlled flow	Flow rate	ℓ/min(ANR)	[10]		130 [13]	300 [13]	400	550	900	1100	1200
	Effective cross-sectional area	mm^2	[0.15]		1.9 [0.2]	4.5 [0.2]	6	8	13.5	16.5	18

● In/out speed controller Inline SCD2

Model No.		SCD2-04			SCD2-06	SCD2-08		SCD2-10		
Compatible tube O.D.	mm	ø1.8	ø1.8/ø4	ø4	ø6	ø6	ø8	ø8	ø10	ø12
Working fluid		Compressed air								
Max. working pressure	MPa	0.7 (≈100 psi, 7 bar)		1.0 (≈150 psi, 10 bar)						
Min. working pressure	MPa	0.1 (≈15 psi, 1 bar)								
Proof pressure	MPa	1.05 (≈150 psi, 10.5 bar)		1.5 (≈220 psi, 15 bar)						
Fluid temperature	°C	5 (41°F) to 60 (140°F) (no freezing. *3)								
Ambient temperature	°C	0 (32°F) to 60 (140°F) (no freezing)								
Weight	g	23	22	21.5	29	63	64	108	112	114
Dial value (needle position)		12 [15]								
Flow rate	ℓ/min(ANR)	[10]	[10]	100 [13]	250 [13]	330	400	750	850	900
Effective cross-sectional area	mm^2	[0.15]	[0.15]	1.5 [0.2]	3.7 [0.2]	5	6	11	12.5	13

*1: Flow rate is the atmospheric pressure conversion at 0.5 MPa.
*2: Values in [ ] indicate fine speed.
*3: Freezing may occur due to adiabatic expansion depending on the air quality (dew point).

Clean-room specifications

(Catalog No. CB-033SA)

● Anti-dust generation structure for use in cleanrooms

SCL2-.....**-** P7*

Specifications for rechargeable battery

(Catalog No. CC-1226A)

● Structure compatible with rechargeable battery manufacturing process

SCL2
SCD2-.....**-** P4

How to order

● Speed controller Line type

SCL2 - 04 - H44 - ○

● In/out speed controller Inline

SCD2 - 04 - H44 - ○

Model No. | Ⓐ Body size | Ⓑ Compatible tube O.D. | Ⓒ Flow characteristics

Refer to the table at right for body size, compatible tube O.D. and flow characteristic combinations.

Code	Description
Ⓐ Body size	
04	M5 thread equivalent
06	1/8 thread equivalent
08	1/4 thread equivalent
10	3/8 thread equivalent
Ⓑ Compatible tube O.D.	
H22	ø1.8
H42	Side A: ø4 Side B: ø1.8
H24 (*1)	Side A: ø1.8 Side B: ø4
H44	ø4
H66	ø6
H88	ø8
H1010	ø10
H1212	ø12
Ⓒ Flow characteristics	
Blank	Standard
F	Fine speed

⚠ Precautions for model No. selection

*1 : H24 cannot be selected for SCD2. Select H42 instead.

*2 :There is no push-in fitting compatible with Item Ⓑ Compatible tube O.D. ø1.8. Refer to page 894 for line types with ø1.8 diameter push-in fittings.

Combination of body size, compatible tube O.D. and flow characteristics

			Ⓐ Body size			
			04	06	08	10
Ⓑ Compatible tube O.D.	H22	ø1.8	○			
	H42	ø4/ø1.8	○			
	H24 (*1)	ø1.8/ø4	○			
	H44	ø4	● ○			
	H66	ø6		● ○	●	
	H88	ø8			●	●
	H1010	ø10				●
	H1212	ø12				●

● Flow characteristics “standard”
○ Flow characteristics “fine speed”
Not available

● Illustration of combination of compatible tube O.D. (H24/H42 only)

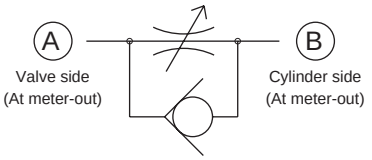

Free flow direction →
Controlled flow direction ←

Flow characteristics

● Standard
SCL2-04, SCL2-06, SCD2-04, SCD2-06

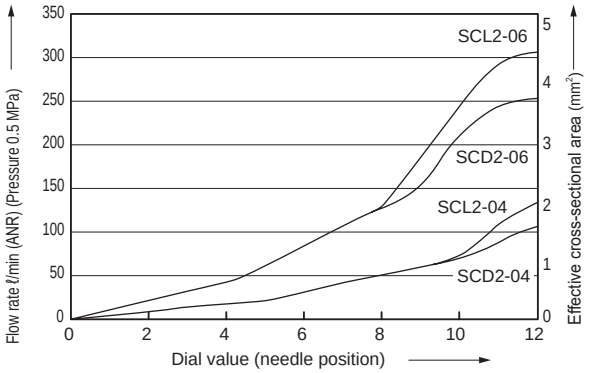

● Standard
SCL2-08, SCL2-10

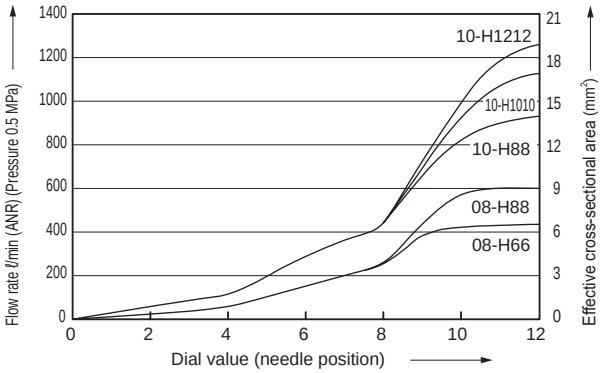

● Standard
SCD2-08, SCD2-10

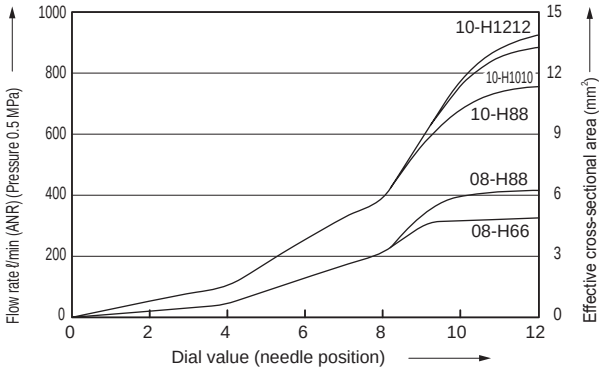

● Fine speed

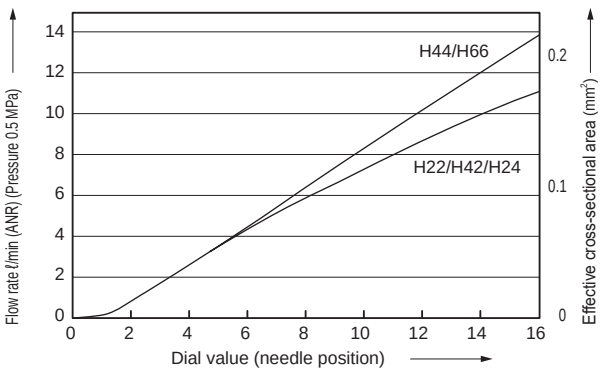

Internal structure and parts list

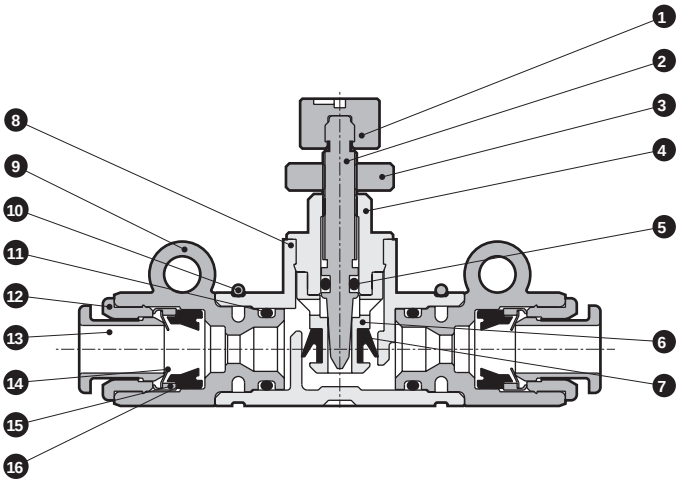

Part No.	Part name	Material
1	Knob	Polybutylene terephthalate
2	Needle	Brass
3	Lock nut	Brass
4	Guide ring	Brass
5	O-ring	Nitrile rubber
6	Check bracket	Brass
7	Check packing	Hydrogenated nitrile rubber
8	Body	Polybutylene terephthalate
9	Joint case	Polybutylene terephthalate
10	Stopper ring	Stainless steel
11	O-ring	Nitrile rubber
12	Outer ring	Brass
13	Push ring	Polybutylene terephthalate
14	Chuck	Stainless steel
15	Holder	Brass or polyether sulfone
16	Packing	Nitrile rubber

*1 All the brass parts have electroless nickel plating.
*2 All resin parts are flame-resistant. (equivalent to UL94 standards V-0)
Excluding compatible tube O.D. ø1.8.

Dimensions

● SCL2 Series

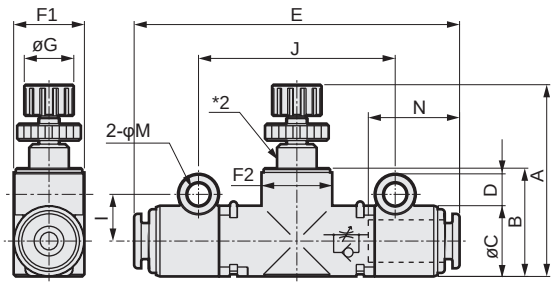

● SCD2 Series

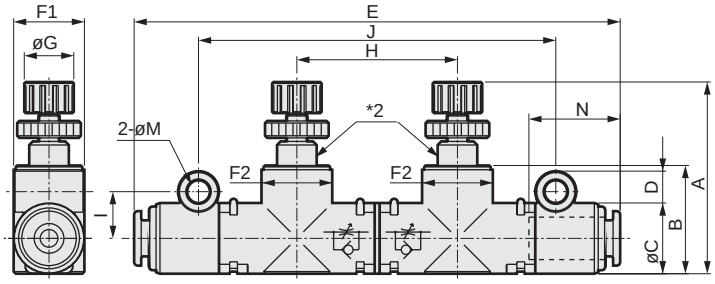

● Installation spacing dimensions for manifolds

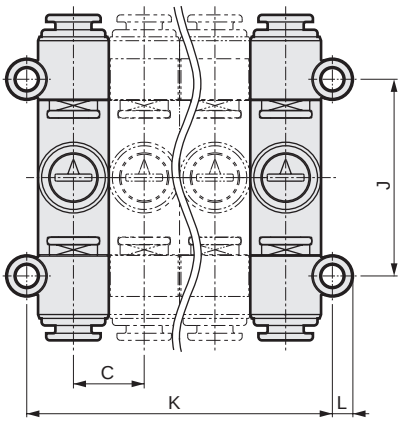

● Outline drawing of outer tubing connection diameter ø1.8 fitting

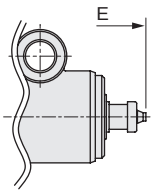

Model No.	Connection tubeO.D	A MIN	A MAX	B	C	D	E	F1	F2	G	H	I	J	K	L	M (Mounting hole diameter)	N (tube insert length)
SCL2-04-H22 *1	ø1.8	27.1	31.6	15.3	10	4.5	50.8	10	10.6	7	-	6.6	27.8	10 x n+3.2	2.9	3.3	-
SCL2-04-H42 *1	ø4/ø1.8						48.4										12.9/-
SCL2-04-H24 *1	ø1.8/ø4						48.4										–/12.9
SCL2-04-H44	ø4						46										12.9
SCL2-06-H66	ø6	28.8	33.3	17.7	12	5.6	49.4	12	12.2	7	-	8.1	30.8	12×n+4.2	3.5	4.3	13.7
SCL2-08-H66	ø6	38	44.5	22.9	15	5.6	64	15	15.5	11	-	9.5	41	15×n+4	3.6		18
SCL2-08-H88	ø8						66.5										19
SCL2-10-H88	ø8	44	50.5	29.7	20	5.1	71	20	20.5	11	-	11.5	47	20×n+3			19
SCL2-10-H1010	ø10						75										21
SCL2-10-H1212	ø12				20.4	4.9	79							20.4×n+3			22
SCD2-04-H22 *1	ø1.8	27.1	31.6	15.3	10	4.5	73.5	10	10.6	7	22.7	6.6	50.5	10 x n+3.2	2.9	3.3	-
SCD2-04-H42 *1	ø4/ø1.8						71.1										12.9/-
SCD2-04-H44	ø4						68.7										12.9
SCD2-06-H66	ø6	28.8	33.3	17.7	12	5.6	73.9	12	12.2	7	24.5	8.1	55.3	12×n+4.2	3.5	4.3	13.7
SCD2-08-H66	ø6	38	44.5	22.9	15	5.6	97.5	15	15.5	11	34	9.5	75	15×n+4	3.6		18
SCD2-08-H88	ø8						100										19
SCD2-10-H88	ø8	44	50.5	29.7	20	5.1	111	20	20.5	11	40.5	11.5	87.5	20×n+3			19
SCD2-10-H1010	ø10						115										21
SCD2-10-H1212	ø12				20.4	4.9	119							20.4×n+3			22

*1: Connection tubing is a fitting dedicated to fiber tube.
*2: There is a slit at this location on the fine speed type.
*3: F1 and F2 dimensions are oval.

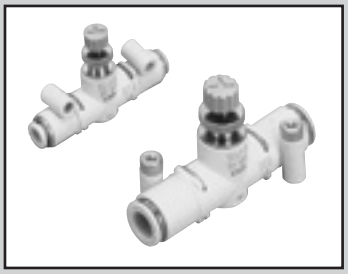

Needle valve Line type with push-in fitting

SCL2-N Series

● Port size: ø4/ø6/ø8

JIS symbol 

RoHS CAD

Features

Unrestricted mounting

The installation area rotates by 360°, enabling mounting and installation method to be from base, side, or panel.
Mounting bracket is not required.

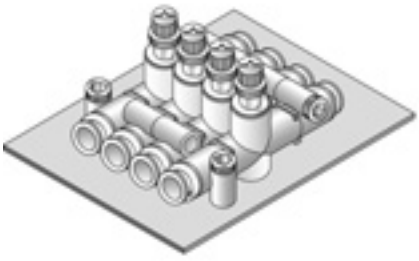

Example of base mounting

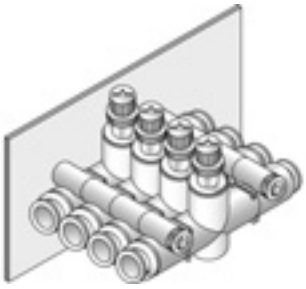

Example of wall mounting

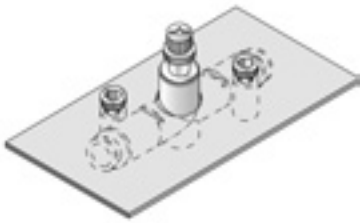

Example of panel mounting

Low-evaporation grease

This series is suitable for oil-sensitive environments and systems. This product is also compatible with oil-free clean packaging "oil-prohibited specifications."

Linear flow characteristics

A flat dedicated needle for flow adjustment is used.

Specifiable flow size

Four flow rate sizes of 13/50/150 and 300 ℓ/min. at 0.5 MPa are available to enable precise flow rate adjustment.

Push-in connection

Push-in fittings simplify tubing connection.

Standard flame-resistant resin: UL94 Standard V-0 or equivalent

■ SCL2-N Series applications

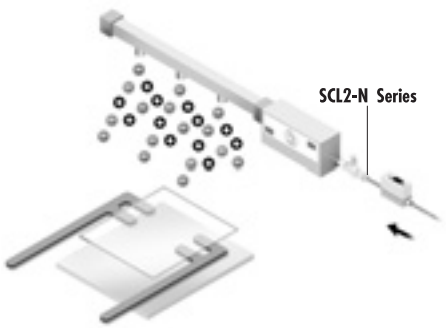

- Flow characteristics of ionizer purge gas
- Air blow in clean room
- N2 purge circuit
- Adjustment of workpiece unloading blow rate for disk former
- Flow rate control at tension control

Specifications

Model No.	SCL2-N-04	SCL2-N-06	SCL2-N-08	
Compatible tube O.D. mm	ø4	ø6	ø6	ø8
Working fluid	Compressed air/N_2 gas			
Max. working pressure MPa	1.0 (≈150 psi, 10 bar)			
Negative pressure kPa	-100 (≈-15 psi, -1 bar)			
Proof pressure MPa	1.5 (≈220 psi, 15 bar)			
Fluid temperature °C	5 (41°F) to 60 (140°F) (no freezing. Note)			
Ambient temperature °C	0 (32°F) to 60 (140°F) (no freezing)			
Weight g	11.5	16	32	33
Dial value (needle position)	12 (15 rotations for flow rate 010)			

Note: Freezing may occur due to adiabatic expansion depending on the air quality (dew point).

Flow characteristics

Flow rate code	010	050	150	300
Max. flow rate (at 0.5 MPa) ℓ/min(ANR)	13	50	150	300
Effective cross-sectional area mm^2	0.2	0.7	2.2	4.5

Note: Flow rate is the atmospheric pressure conversion at 0.5 MPa.

How to order

● Needle valve Line type

SCL2 - N - 04 - H44 - 010 - ( )

Model No.

Ⓐ Body size

Ⓑ Compatible tube O.D.

Refer to the table at right for the body size, compatible tube O.D. and flow combinations.

Ⓒ Flow rate type

Ⓓ Option

Code	Description
Ⓐ Body size	
04	M5 thread equivalent
06	1/8 thread equivalent
08	1/4 thread equivalent
Ⓑ Compatible tube O.D.	
H44	ø4
H66	ø6
H88	ø8
Ⓒ Flow rate	
010	Refer to flow
050	characteristics
150	graph and
300	specifications
Ⓓ Option	
Blank	Standard specifications
P80	Oil-prohibited specifications

Combination of body size, compatible tube O.D. and flow rate

Ⓒ Flow rate	Ⓐ Body size - Ⓑ Compatible tube O.D.			
	04-H44	06-H66	08-H66	08-H88
010	●	●		
050	●	●		
150		●		
300			●	●

Not available

Flow characteristics

● Flow rate “010”

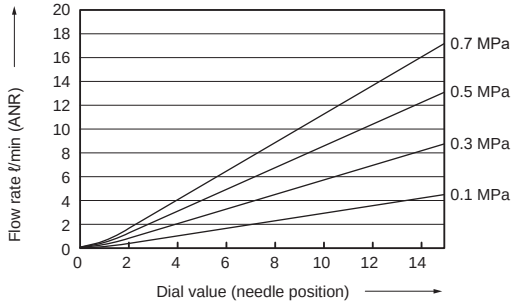

● Flow rate “150”

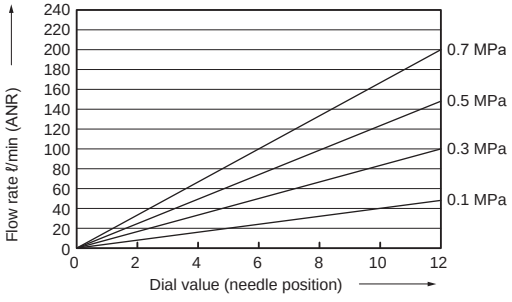

● Flow rate “050”

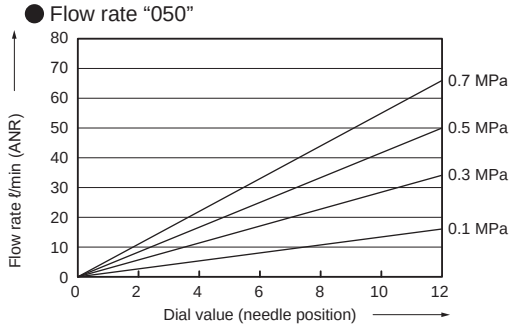

● Flow rate “300”

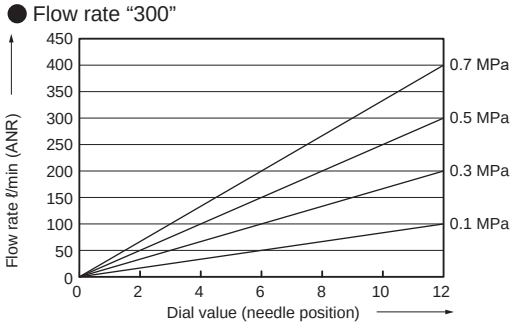

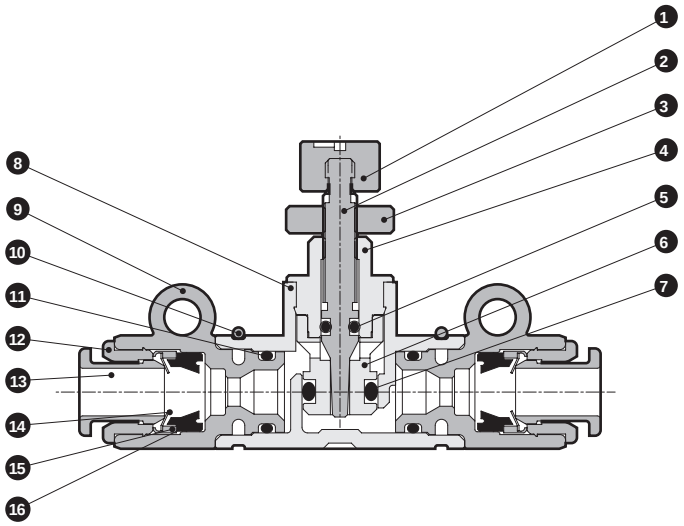

Part No.	Part name	Material
1	Knob	Polybutylene terephthalate
2	Needle	Brass
3	Lock nut	Brass
4	Guide ring	Brass
5	O-ring	Nitrile rubber
6	Check bracket	Brass
7	O-ring	Nitrile rubber
8	Body	Polybutylene terephthalate
9	Joint case	Polybutylene terephthalate
10	Stopper ring	Stainless steel
11	O-ring	Nitrile rubber
12	Outer ring	Brass
13	Push ring	Polybutylene terephthalate or polyacetal
14	Chuck	Stainless steel
15	Holder	Brass or polyether sulfone
16	Packing	Nitrile rubber (hydrogenated nitrile rubber) *2

*1 All the brass parts have electroless nickel plating.
*2 ( ): When P80 is selected

Dimensions CAD

● SCL2-N Series

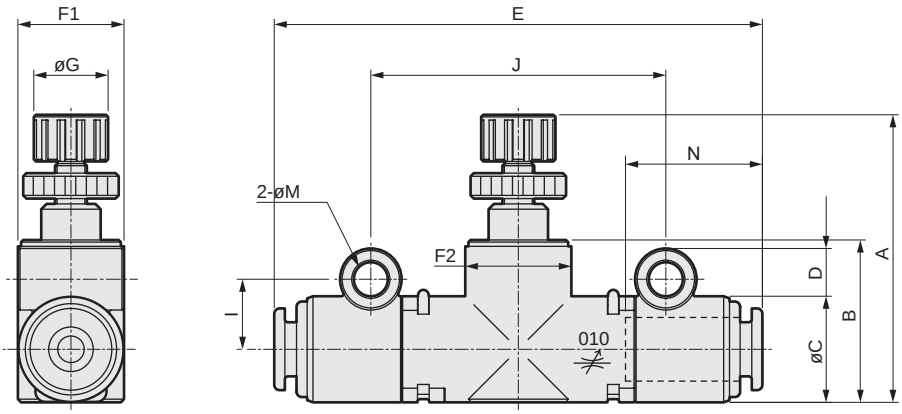

Model No.	Connection tube O.D	A		B	C	D	E	F1	F2	G	I	J	K	L	M (Mounting hole diameter)	N (tube insert length)
		MIN	MAX													
SCL2-N-04-H44	ø4	27.1	31.6	15.3	10	4.5	46	10	10.6	7	6.6	27.8	10 x n+3.2	2.9	3.3	12.9
SCL2-N-06-H66	ø6	28.8	33.3	17.7	12	5.6	49.4	12	12.2	7	8.1	30.8	12×n+4.2	3.5	4.3	13.7
SCL2-N-08-H66	ø6	38	44.5	22.9	15	5.6	64	15	15.5	11	9.5	41	15×n+4	3.8		18
SCL2-N-08-H88	ø8						66.5									19

Note: F1 and F2 dimensions are oval.

* Can be distinguished from a speed controller with the color of the knob.
Speed controller…… Knob: "White"
Needle valve…… Knob: "Gray"
* The fitting push ring is blue for option P80 (oil-prohibited specifications).

Design/selection

⚠CAUTION

■ Do not use this valve in circuits where ozone is generated intentionally. Ozone resistance is sufficient for naturally generated ambient ozone. Check packing deteriorates if ozone levels are high.

■ This valve cannot be used as a stop valve that requires no leakage. Slight leakage is allowed for in this product's specifications.

■ Note that not all of the resin parts of the needle valve are flame-resistant.

■ The flow path in the needle valve is not completely free of dust generation. A final clean filter should be used in circuits where dust generation could be a problem.

Mounting, installation and adjustment

⚠CAUTION

■ Rotate the mounting hole section in a non-pressurized state.

■ When mounting on a panel, the stopper ring will interfere with the panel, so insert a flat washer between the mounting hole and panel.

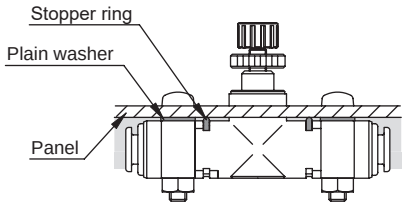

■ Tighten bolts in mounting holes using the torques (or less) shown below.

Model No.	Tightening torque
SCL(D)2-04	0.5 N·m
SCL(D)2-06/08/10	0.8 N·m

■ As tubing may be dislocated due to product oscillation or torsion, fix the product with bolts or Insulok ties, etc., when piping.

■ Do not turn the dial forcibly when fully closing or opening it (0.05 N·m or less). Do not use the lock nut to adjust the needle. Otherwise this could cause needle galling or damage.

■ Tightening the lock nut excessively can cause problems. Do not use a torque higher than what is indicated in the following table.

Model No.	Tightening torque
SCL(D)2-04/06	0.2 N·m
SCL(D)2-08/10	0.3 N·m

■ The adjustment knob of the "P80 (oil-prohibited specifications)" option may be slightly hard to turn.

■ There is no directionality for needle valve piping.

■ Connect the fiber tube (ø1.8 fitting) in the following procedure ((1) to (5)).

(1) Set the collar at the very back.

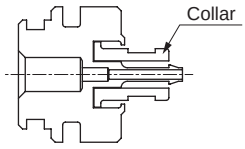

(2) Cut the end of fiber tube at a right angle.

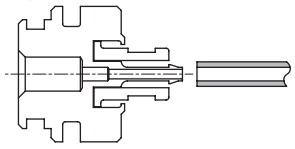

(3) Pass the collar through and confirm that the fiber tube is correctly inserted while carrying out the work.

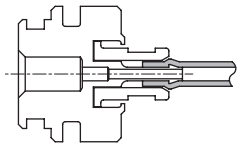

(4) Insert fiber tube to the last position.

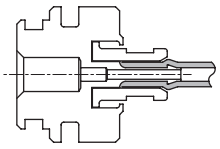

(5) Pull the collar forward to lock it.

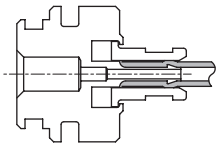

Example of in/out speed controller

1 Speed is stabilized by controlling with an in/out speed controller.

[Example 1] In low-speed control with a single rod cylinder, the cylinder pops out immediately after the PUSH side operates if a meter-out circuit is used.

[Example 2] When vertically mounted, the cylinder pops out immediately after actuation because of the load weight.

Speed is stabilized by using a meter in/out circuit.

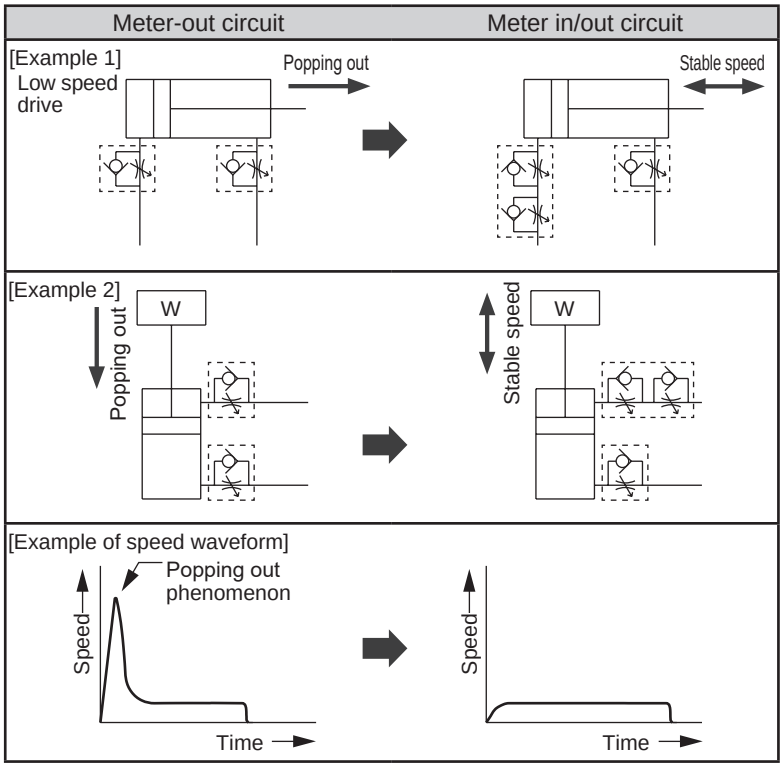

[Cause of popping out phenomenon]

When using the meter-out circuit, flow on the exhaust side is restricted, so both sides reach the same pressure immediately after the valve is switched. The thrust equivalent to the difference in the piston's pressurized area or the thrust equivalent to the load's weight causes popping out.

When the piston moves, exhaust pressure rises, speed decelerates and the set speed is reached. If popping out is caused by this phenomenon, fluctuation in sudden thrust is suppressed by restricting the flow on the supply side and popping out is resolved.

2 Danger can be prevented by suppressing popping out at the beginning of movement after residual pressure is released.

3 Reciprocating speed control is possible with a single acting cylinder.

MEMO

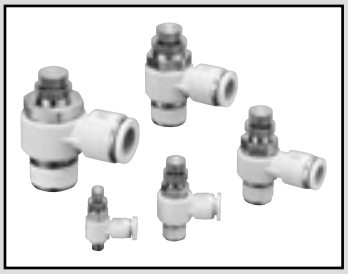

Speed controller Stainless steel corrosion-resistant

SC3P Series

● Port size: M5, R1/8 to R1/2

JIS symbol

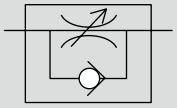

RoHS CAD

Features

● The speed control valve uses highly anti-corrosive stainless steel equivalent to SUS303 (Cr 20% and Mo 2%). As copper alloy material is not used, this product is suitable for atmospheres where copper ions should be avoided.

● Standard ozone-resistant materials
Ozone-proof materials for degradation prevention are used as standard for the check packing.

● Ecological products
As a RoHS Directive compatible product, all substances which adversely affect the global environment have been eliminated from the materials.

Specifications

Model No.		SC3P															
Item		SC3P-M5		SC3P-6			SC3P-8			SC3P-10				SC3P-15			
Compatible tube O.D.	mm	ø4	ø6	ø4	ø6	ø8	ø6	ø8	ø10	ø6	ø8	ø10	ø12	ø8	ø10	ø12	
Working fluid		Compressed air															
Max. working pressure	MPa	0.9 (≈130 psi, 9 bar)															
Min. working pressure	MPa	0.1 (≈15 psi, 1 bar)															
Proof pressure	MPa	1.35 (≈200 psi, 13.5 bar)															
Ambient temperature	°C	0 (32°F) to 60 (140°F) (no freezing)															
Port size	Rc	M5		R1/8			R1/4			R3/8				R1/2			
Weight	g	7	7.6	17	17	20	33	36	39	63	63	66	69	95	98	101	
Dial value (needle position)		7 or more		12 or more			13 or more										

*1: Freezing may occur by adiabatic expansion depending on the air quality (dew point).

How to order

SC3P - 8 - 8 - I

- SC3P: Model No.
- 8: Ⓐ Port size
- 8: Ⓑ Compatible tube O.D.
- I: Ⓒ Option

Code	Description
Ⓐ Port size	
M5	M5×0.8
6	R1/8
8	R1/4
10	R3/8
15	R1/2

Ⓑ Compatible tube O.D.		Piping size				
		M5	6	8	10	15
4	**ø4**	●	●			
6	**ø6**	●	●	●	●	
8	**ø8**		●	●	●	●
10	**ø10**			●	●	●
12	**ø12**				●	●

Ⓒ Option	
Blank	Meter-out control
I	Meter-in control

Not available

Flow rate and effective cross-sectional area

Model No.		SC3P														
Item		SC3P-M5		SC3P-6			SC3P-8			SC3P-10				SC3P-15		
Compatible tube O.D.	mm	ø4	ø6	ø4	ø6	ø8	ø6	ø8	ø10	ø6	ø8	ø10	ø12	ø8	ø10	ø12
Free flow	Flow rate ℓ/min(ANR)	55		200		230	390	400		600	800		840	1140	1380	
	Effective cross-sectional area mm²	0.9		3		3.5	5.9	6		9	12		12.5	17	21	
Controlled flow	Flow rate ℓ/min(ANR)	70		150			270			550	850	920		1100	1450	1600
	Effective cross-sectional area mm²	1.1		2.3			4			8	12.8	14		16.5	22	24

*1: Flow rate is the atmospheric pressure conversion value at pressure 0.5 MPa.
*2: The effective cross-sectional area lists the value converted from the flow rate.

Flow characteristics

[Free flow]

● SC3P-M5-*

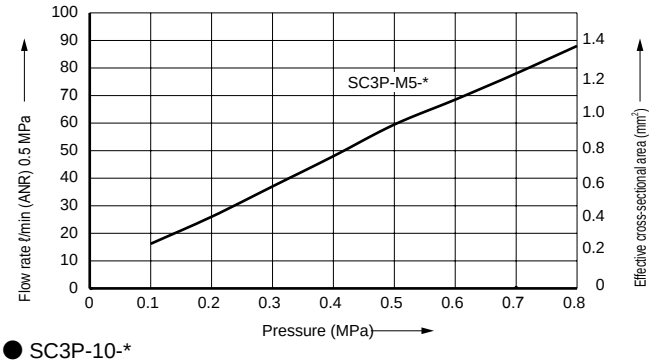

● SC3P-6-*,SC3P-8-*

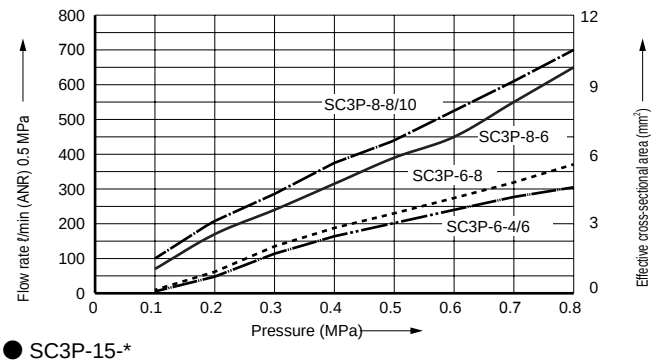

● SC3P-10-*

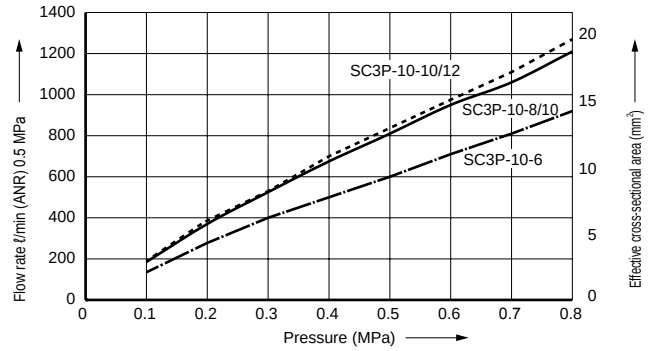

● SC3P-15-*

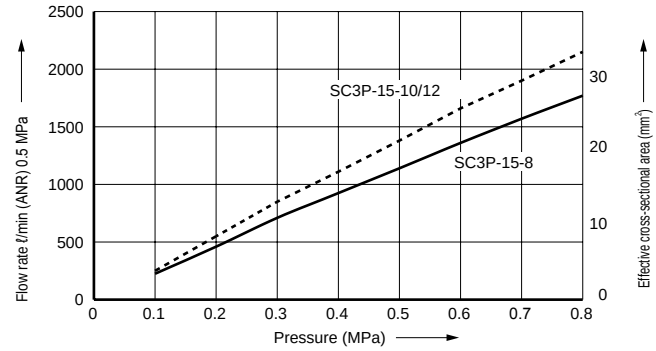

[Controlled flow]

● SC3P-M5-*

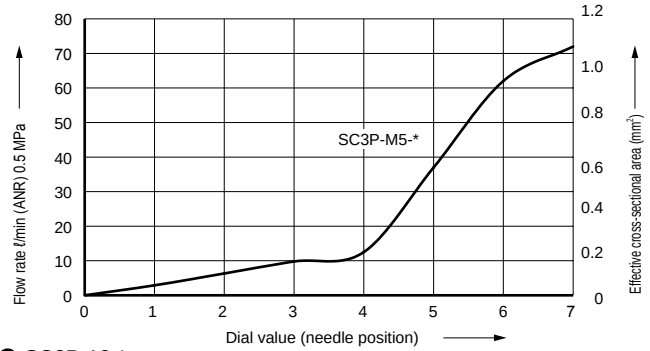

● SC3P-6-*,SC3P-8-*

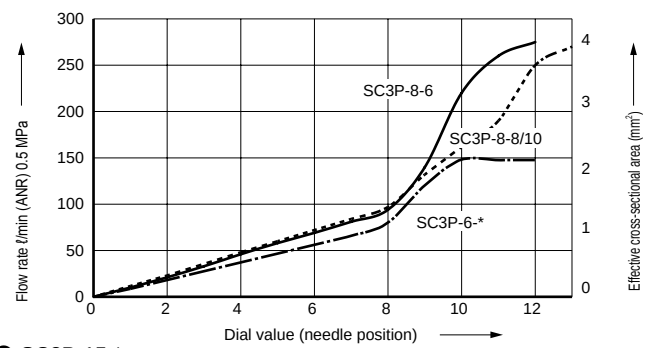

● SC3P-10-*

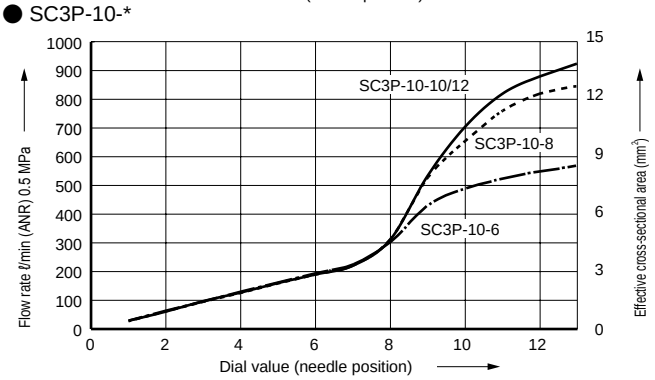

● SC3P-15-*

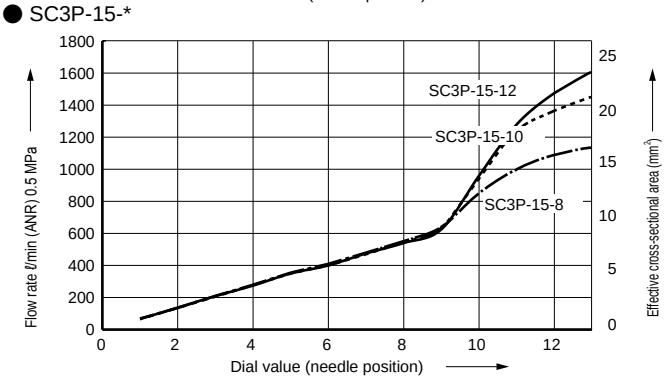

Dimensions

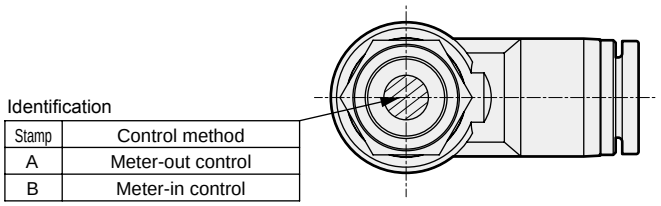

Stamp	Control method
A	Meter-out control
B	Meter-in control

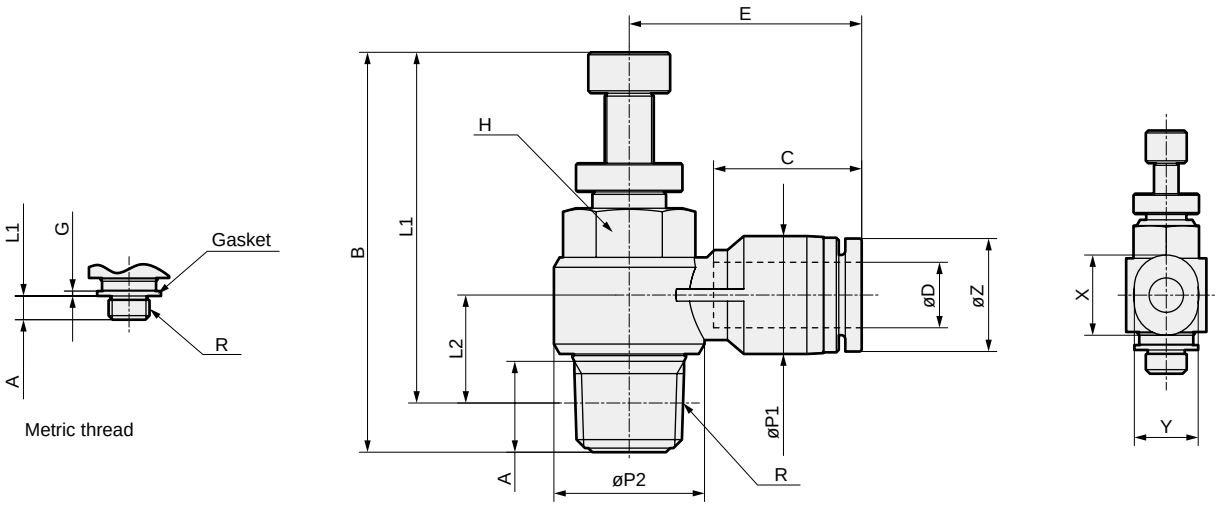

Code / Model No.	øD tube O.D.	R	A	B MAX	B MIN	L1 MAX	L1 MIN	L2	øP1	øP2	C Tube end	E	H opposite side	øZ	X	Y
SC3P-M5-4	ø4	M5× 0.8	3.2	29.7	27.0	26.5	23.8	6.4	8	9.8	11.3	15.7	8	-	9.8	7.8
SC3P-M5-6	ø6							7.2	10.5		11.8	17.7		-	11.8	9.8
SC3P-6-4	ø4	R1/8	8	41.5	34.9	37.5	30.9	10.7	8	14.4	11.3	18	10	-	9.8	7.8
SC3P-6-6	ø6							10.7	10.5		11.8	18.5		-	11.8	9.8
SC3P-6-8	ø8							11.9	14.4		18.1	26.9		13.8	-	-
SC3P-8-6	ø6	R1/4	11.1	48.9	42.2	42.8	36.1	11.9	10.5	18.4	11.8	20.4	14	-	11.8	9.8
SC3P-8-8	ø8							13.2	14.4		18.1	28.4		13.8	-	-
SC3P-8-10	ø10							14.8	17.6		20.2	30.9		16.8	-	-
SC3P-10-6	ø6	R3/8	13.2	54.4	46.9	48	40.5	15.4	14.4	22	17	29	19	11.8	-	-
SC3P-10-8	ø8							15.4	14.4		18.1	28.9		13.8	-	-
SC3P-10-10	ø10							16.7	17.6		20.2	31.2		16.8	-	-
SC3P-10-12	ø12							18.4	21		23.4	36.9		19.8	-	-
SC3P-15-8	ø8	R1/2	16	59.7	52.4	51.5	44.2	18	14.4	28	18.1	31	24	13.8	-	-
SC3P-15-10	ø10							18	17.6		20.2	33.6		16.8	-	-
SC3P-15-12	ø12							19.7	21		23.4	36.4		19.8	-	-

* The taper female thread L1 and L2 dimensions are the reference dimensions after tightening.

Internal structure and parts list

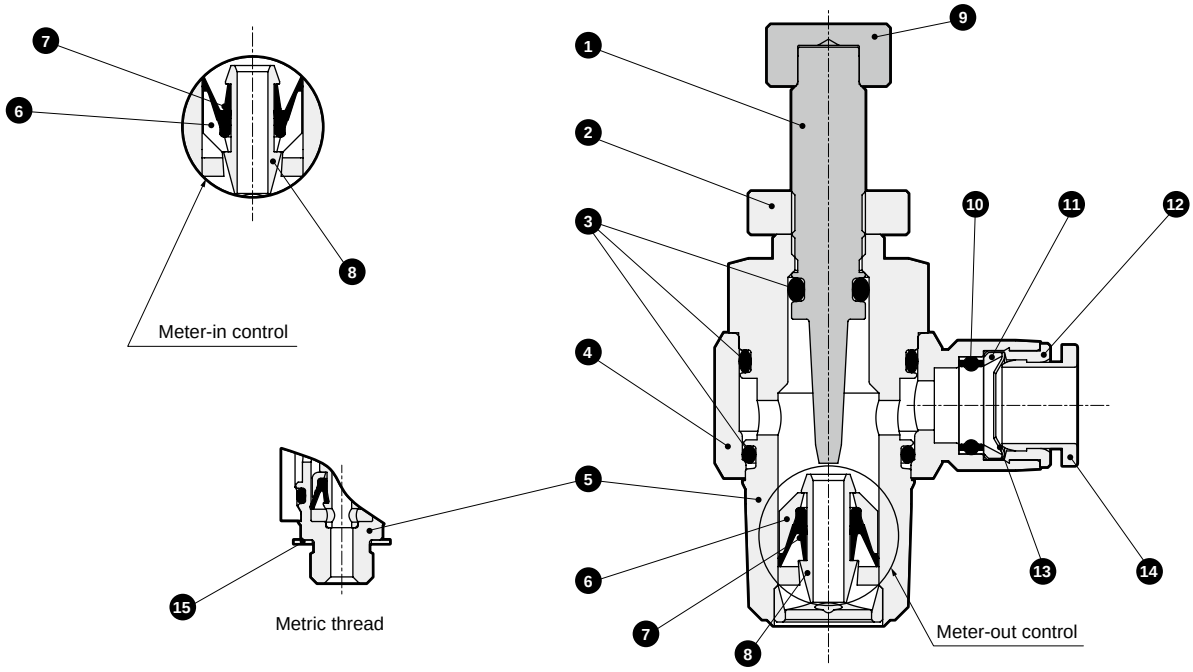

No.	Part name	Material	No.	Part name	Material
1	Needle	Stainless steel (SUS303 or equivalent)	9	Knob	Stainless steel (SUS303 or equivalent)
2	Lock nut	Stainless steel (SUS303 or equivalent)	10	Elastic sleeve	Hydrogenated nitrile rubber
3	O-ring	Hydrogenated nitrile rubber	11	Lock ring	Stainless steel (SUS303 or equivalent)
4	Resin body	Polybutylene terephthalate	12	Guide ring	Stainless steel (SUS303 or equivalent)
5	Metal body	Stainless steel (SUS303 or equivalent)	13	Lock claw	Stainless steel (SUS301)
6	Basket	Polybutylene terephthalate	14	Release ring	Polyacetal
7	Check packing	Hydrogenated nitrile rubber	15	Gasket	Polyphenylene sulfide
8	Core guide	Stainless steel (SUS303 or equivalent)			

Safety precautions

- Always use within the product specifications.
- This product is used for compressed air. Do not use this unit for other fluids.
- Securely insert the tube to the tube end and make sure that the tube cannot be pulled off.
- Cut the tube with a dedicated cutter and always at a right angle.
- Remove all cutting chips and foreign matter generated during piping and tube insertion before starting use.
- Provide sufficient allowance in the tube so that it does not bend sharply.
- Avoid using this product in a hot humid place, outdoors or where it is subject to direct sunlight.
- Avoid using this product in places with high levels of vibration or impact.
- The needle tolerates a slight leak even when fully closed, so do not use it as a stop valve.
- Stop air flow and confirm that there is no residual pressure before replacing the tube.
- The chemical resistance level is equivalent to SUS440. This product cannot be used when a higher chemical resistance is required.
- Be sure to contact CKD when using in a corrosive atmosphere. The fitting body could be damaged under some conditions.

[Recommended tightening torque]

Port thread	Tightening torque N·m
M5	1.0 to 1.5
R1/8	7 to 9
R1/4	12 to 14
R3/8	22 to 24
R1/2	28 to 30

■ Precautions for piping

- Always use within the recommended tightening torque range.
- Do not tighten while pressure is applied.
- Stop air flow and confirm that there is no residual pressure before replacing the tube.
- Mounting is possible by rotating in an arbitrary direction, but do not use this product in applications involving constant rotation or oscillation.



Speed controller direct piping/elbow

SC3R Series

● Port size: M5, Rc1/8 to Rc1/2

JIS symbol

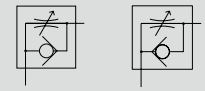

(Meter-out) (Meter-in)

RoHS CAD

Specifications

Item		SC3R-M5	SC3R-6	SC3R-8	SC3R-10	SC3R-15
Working fluid		Compressed air				
Max. working pressure MPa		1.0 (≈150 psi, 10 bar)				
Min. working pressure MPa		0.05 (≈7.3 psi, 0.5 bar)				
Proof pressure MPa		1.5 (≈220 psi, 15 bar)				
Fluid temperature °C		5 (41°F) to 60 (140°F) (no freezing) *2				
Ambient temperature °C		0 (32°F) to 60 (140°F) (no freezing)				
Port size		M5	Rc1/8	Rc1/4	Rc3/8	Rc1/2
Weight g		14	40	70	110	190
Cylinder bore size mm		ø6 to ø16	ø15 to ø32	ø20 to ø50	ø32 to ø75	ø40 to ø110
Dial value (needle position)		11	14	14	14	16
Free	Flow rate ℓ/min(ANR)	80	270	500	1100	1600
flow	Eff. X-sectional area mm^2	1.2	4.0	7.5	16	24
Controlled	Flow rate ℓ/min(ANR)	47	240	470	1100	1600
flow	Eff. X-sectional area mm^2	0.7	3.6	7.0	15	24

*1: Flow rate is the atmospheric pressure conversion at 0.5 MPa.
*2: Freezing may occur due to adiabatic expansion depending on the air quality (dew point).

SC3R – M5 – I

Ⓐ Port size

Ⓑ Option

Code	Description
Ⓐ Port size	
M5	M5×0.8
6	Rc1/8
8	Rc1/4
10	Rc3/8
15	Rc1/2
Ⓑ Option	
I	Meter-in
Blank	Meter-out

Ozone-proof specifications

(Ending Page 9)

SC3R – ..... – P11

Clean-room specifications

(Catalog No. CB-033SA)

● Anti-dust generation structure for use in cleanrooms

SC3R – ..... – P7*

Flow characteristics

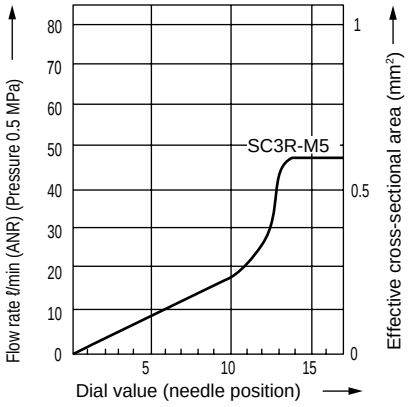

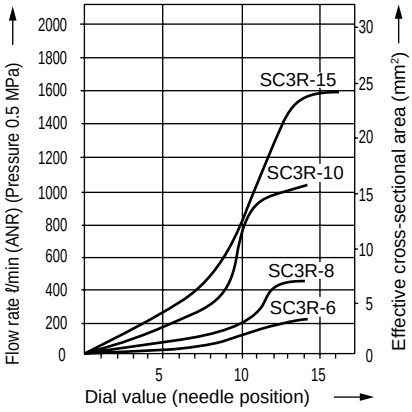

Internal structure and parts list

● SC3R-M5

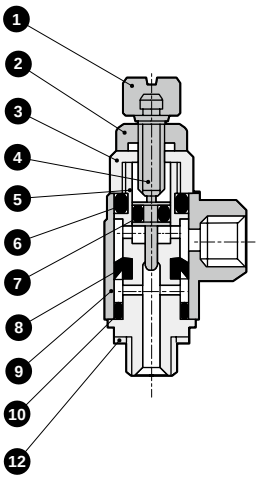

● SC3R-6 to 15

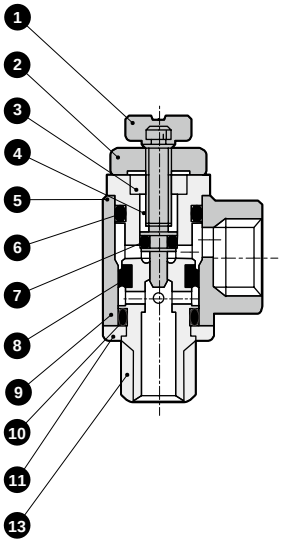

No.	Part name	Material
1	Knob	Copper alloy
2	Lock nut	Copper alloy
3	Gland nut	Copper alloy
4	Needle	Stainless steel
5	Rotary shaft	Copper alloy
6	O-ring	Nitrile rubber
7	O-ring	Nitrile rubber
8	Packing	Hydrogenated nitrile rubber
9	Rotor	Zinc die-casting (copper alloy)
10	O-ring	Nitrile rubber
11	Snap ring	Polybutylene terephthalate resin
12	M5 gasket	Nitrile rubber + steel
13	Sealant	Fluorinated resin

* ( ): SC3R-M5
* All the copper alloy parts have electroless nickel plating.

Dimensions CAD

● SC3R-M5

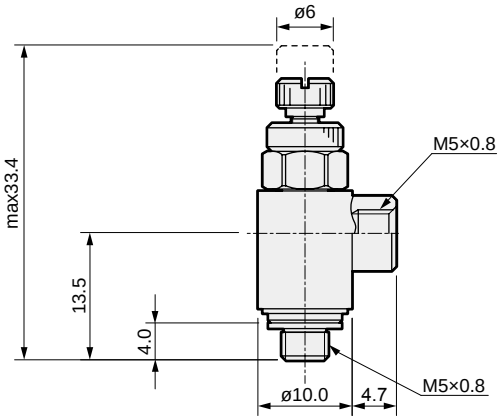

● SC3R-6 to 15

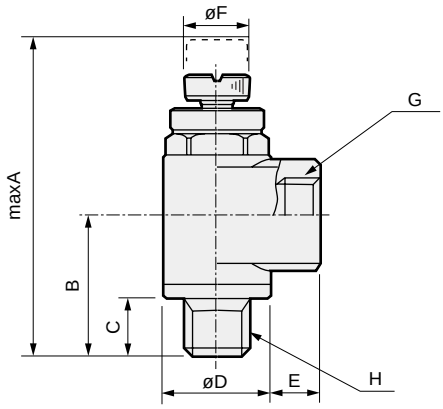

Model No.	A	B	C	D	E	F	G	H
SC3R-6	42.5	18.8	7.7	15.0	6.7	9	Rc1/8	R1/8
SC3R-8	51.2	23.2	10.7	19.0	9.4	12	Rc1/4	R1/4
SC3R-10	60.2	27.0	11.7	22.5	10.0	14	Rc3/8	R3/8
SC3R-15	66.7	30.0	14.7	27.0	13.7	16	Rc1/2	R1/2

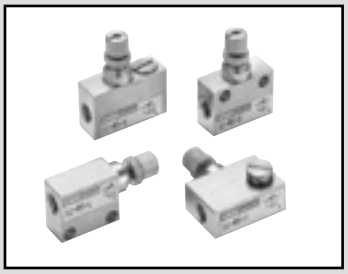

Miniature speed controller

SC-M3/M5

Compact and lightweight enabling space-saving piping. Low speed and fine speed are available.

JIS symbol

SC-M5-S
SC-M5-F



SC-M5-L
SC-M5-A



RoHS CAD

Specifications

Item		SC-M3-S	SC-M3-L	SC-M3-F	SC-M3-A	SC-M5-S	SC-M5-L	SC-M5-F	SC-M5-A
Working fluid		Compressed air							
Max. working pressure MPa		0.7 (≈100 psi, 7 bar)							
Min. working pressure MPa		0.1 (≈15 psi, 1 bar)							
Proof pressure MPa		1.05 (≈150 psi, 10.5 bar)							
Fluid temperature °C		5 (41°F) to 60 (140°F) (no freezing) *1							
Ambient temperature °C		0 (32°F) to 60 (140°F) (no freezing)							
Port size		M3				M5			
Weight g		1.7	1.5	2.4	2.4	5.6(6)	4.8(5.2)	7.9(8.3)	8.5(8.9)
Cylinder bore size mm		ø2.5 to ø10				ø6 to ø25			
Dial value (needle position)		10				10(14)			
Free flow	Flow rate ℓ/min(ANR)	20				53			
	Eff. X-sectional area mm^2	0.3				0.8			
Controlled flow	Flow rate ℓ/min(ANR)	16				47(6.7)			
	Eff. X-sectional area mm^2	0.25				0.7(0.1)			

*1: Freezing may occur due to adiabatic expansion depending on the air quality (dew point).
*2: Flow rate is the atmospheric pressure conversion at 0.5 MPa.
*3: Values in ( ) indicate fine speed.

Flow characteristics

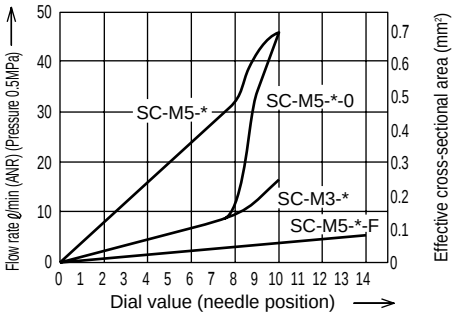

How to order

SC - M3 - A - I F

Ⓐ Port size
Ⓑ Shape
Ⓒ Control method
Ⓓ Flow characteristics

Code	Description
Ⓐ Port size	
M3	M3×0.5
M5	M5×0.8
Ⓑ Shape	
S	Straight
L	Elbow
F	Flat
A	Adjustable
Ⓒ Control method	
Blank	Meter-out
I	Meter-in
Ⓓ Flow characteristics	
Blank	Standard
O	Low speed (M5 only)
F	Fine speed (M5 only)

*1: For fine speed, the lock nut exterior is blue.
2: Not available for SC--S-I. Install SC-*-S with reverse-mounted IN and OUT.

Internal structure and parts list

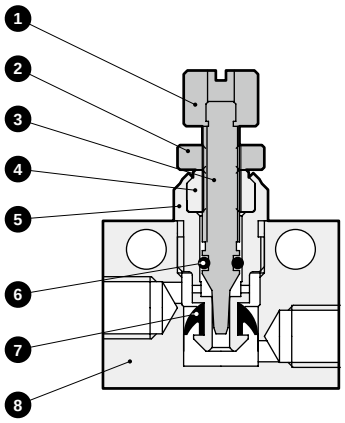

No.	Part name	Material
1	Knob	Aluminum alloy
2	Lock nut	Aluminum alloy
3	Needle	Stainless steel
4	Needle guide	Aluminum alloy
5	Check bracket	Aluminum alloy
6	O-ring	Nitrile rubber
7	Packing	Hydrogenated nitrile rubber
8	Body	Aluminum alloy

Note: For fine speed, the material of the needle guide is stainless steel.

Dimensions CAD

● SC- M3 M5 -S (straight)

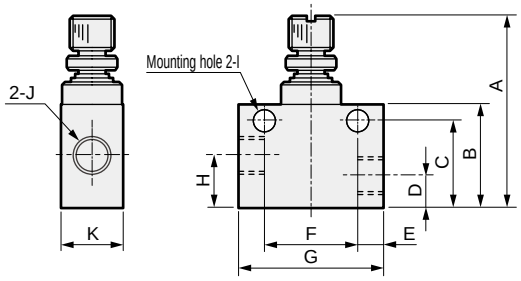

Model No.	A	B	C	D	E	F	G	H	I	J	K
SC-M3-S	18.5(max21)	9	7.3	2.5	2.5	8	13	4.2	ø2.2	M3×0.5	5
SC-M5-S	25(max28.5)	13.5	11.2	4.2	3.5	12	19	6.5	ø3.2	M5×0.8	8

● SC- M3 M5 -L (elbow)

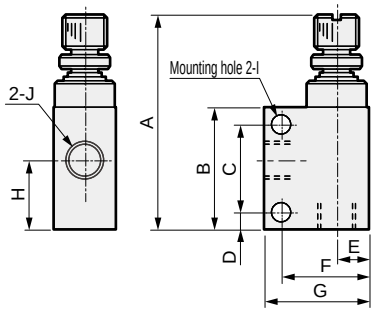

Model No.	A	B	C	D	E	F	G	H	I	J
SC-M3-L	20.3(max22.8)	10.5	7	1.9	2.5	6.5	9	5.7	ø2.2	M3×0.5
SC-M5-L	27.5(max31)	16	11.5	2.2	4.3	11.2	13.5	9	ø3.2	M5×0.8

● SC- M3 M5 -F (flat)

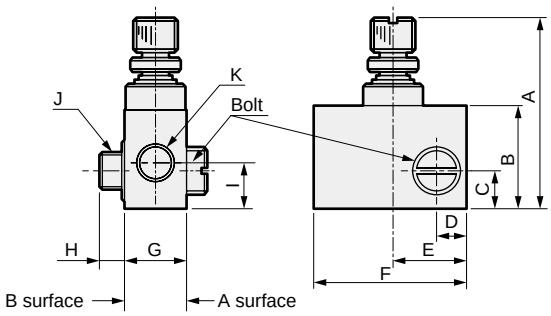

Model No.	A	B	C	D	E	F	G	H	I	J	K
SC-M3-F	18.5(max21)	9	3.4	2.7	6.5	13	5	3	4.2	M3×0.5	M3×0.5
SC-M5-F	25(max28.5)	13.5	5.1	4	10.5	20	8	3.5	6.5	M5×0.8	M5×0.8

Note: The bolt can be removed from the main body and installed from either A or B surfaces.

● SC- M3 M5 -A (adjustable)

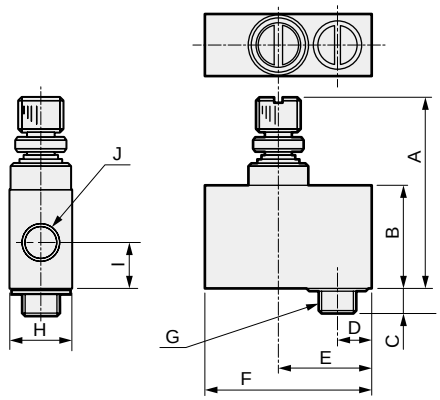

Model No.	A	B	C	D	E	F	G	H	I	J
SC-M3-A	18.5(max21)	9	3	3.2	8	14.5	M3×0.5	5	4.2	M3×0.5
SC-M5-A	25(max28.5)	13.5	3.5	4.5	12.5	22	M5×0.8	8	6.5	M5×0.8

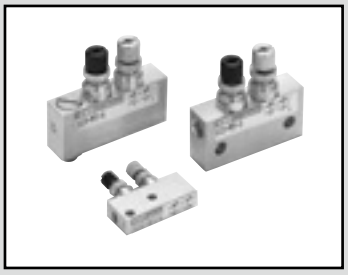

Miniature meter-in meter-out speed controller

SCD-M3/M5 Series

Compact, lightweight and thin body. Speed control valve for air supply and exhaust.

JIS symbol

● SCD-M*-S (straight)

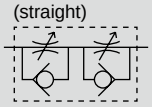

● SCD-M*-A (adjustable)

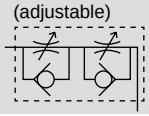

RoHS CAD

Specifications

Item	SCD-M3-S	SCD-M3-A	SCD-M5-S	SCD-M5-A	SCD-M5-S-F	SCD-M5-A-F
Working fluid	Compressed air					
Max. working pressure MPa	0.7 (≈100 psi, 7 bar)					
Min. working pressure MPa	0.1 (≈15 psi, 1 bar)					
Proof pressure MPa	1.05 (≈150 psi, 10.5 bar)					
Fluid temperature °C	5 (41°F) to 60 (140°F) (no freezing. *1)					
Ambient temperature °C	0 (32°F) to 60 (140°F) (no freezing)					
Port size	M3×0.5		M5×0.8			
Cylinder bore mm	ø4 to ø8		ø6 to ø25			
Dial value (needle position)	10				14	
Weight g	3.1	3.9	10	11.7	10.8	12.5
Control flow rate ℓ/min(ANR)	13		37		6.7	
Eff. X-sectional area mm²	0.2		0.55		0.1	

*1: Freezing may occur due to adiabatic expansion depending on the air quality (dew point).
*2: Flow rate is the atmospheric pressure conversion at 0.5 MPa.

How to order

SCD - M3 - S - F

Model No.

Ⓐ Port size

Ⓑ Shape

Ⓒ Flow characteristics

Code	Description
Ⓐ Port size	
M3	M3×0.5
M5	M5×0.8
Ⓑ Shape	
S	Straight
A	Adjustable
Ⓒ Flow characteristics	
Blank	Standard
F	Fine speed (M5 only)

*1: For fine speed, the lock nut exterior is blue.

Flow characteristics

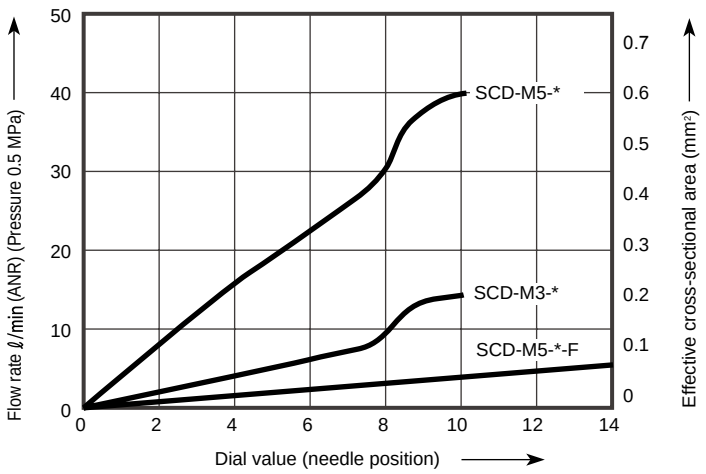

Internal structure and parts list

● Adjustable

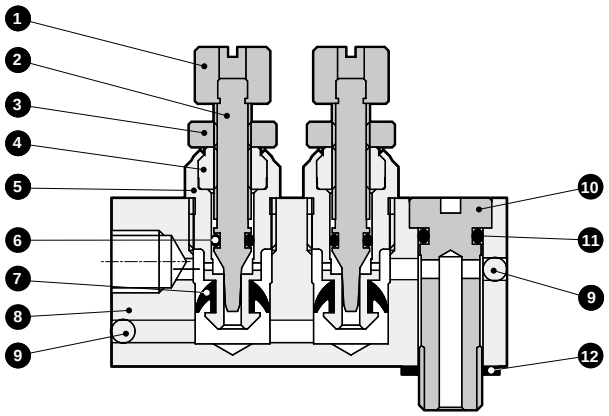

No.	Part name	Material
1	Knob	Aluminum alloy
2	Needle	Stainless steel
3	Lock nut	Aluminum alloy
4	Needle guide	Aluminum alloy (Fine speed is stainless steel)
5	Check bracket	Aluminum alloy
6	O-ring	Nitrile rubber
7	Packing	Hydrogenated nitrile rubber
8	Body	Aluminum alloy
9	Steel ball	Stainless steel
10	Bolt	Copper alloy
11	O-ring	Nitrile rubber
12	Gasket	Steel + nitrile rubber

*1: For the outside of handle, one side is painted with black.
(For adjustable, black indicates meter-in)
*2: The materials are the same for the straight (without ⑩⑪⑫).
*3: Copper alloy parts have electroless nickel plating.

Dimensions CAD

● SCD-M3-S (straight)

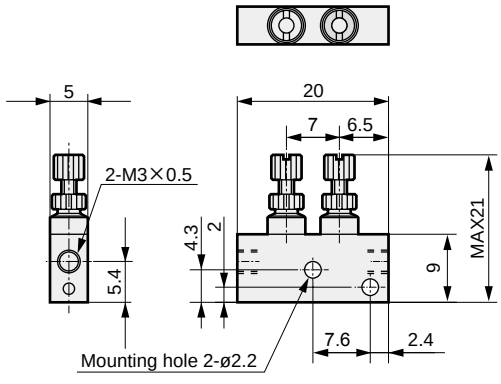

● SCD-M3-A (adjustable)

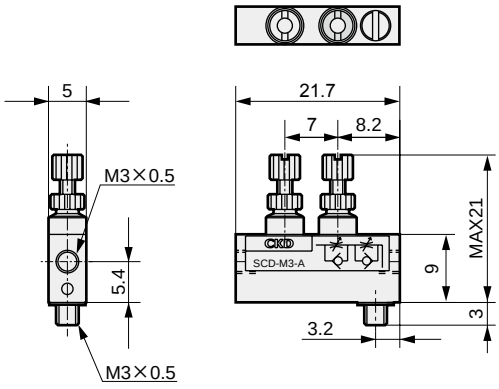

● SCD-M5-S (straight)

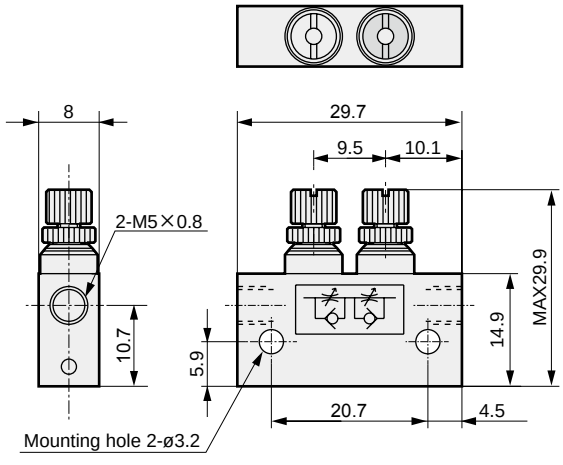

● SCD-M5-A (adjustable)

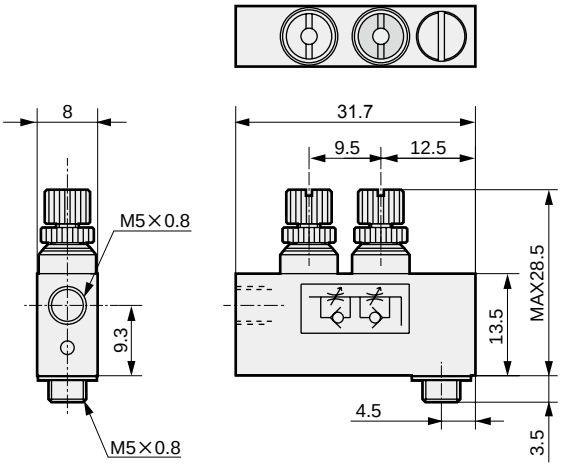

Applications

1 Speed is stabilized by controlling with an in/out speed controller.

[Example 1] In low-speed control with a single rod cylinder, the cylinder pops out immediately after the PUSH side operates if a meter-out circuit is used.

[Example 2] When vertically mounted, the cylinder pops out immediately after actuation because of the load weight. Speed is stabilized by using a meter in/out circuit.

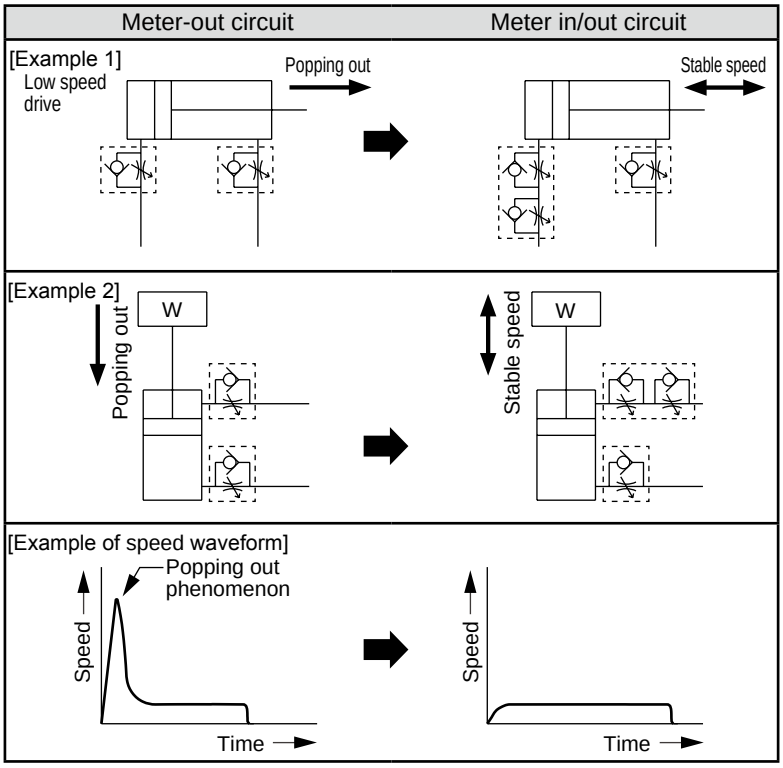

[Cause of popping out phenomenon]
When using the meter-out circuit, flow on the exhaust side is restricted, so both sides reach the same pressure immediately after the valve is switched. The thrust equivalent to the difference in the piston's pressurized area or the thrust equivalent to the load's weight causes popping out.
When the piston moves, exhaust pressure rises, speed decelerates and the set speed is reached.
If popping out is caused by this phenomenon, fluctuation in sudden thrust is suppressed by restricting the flow on the supply side and popping out is resolved.

2 Danger can be prevented by suppressing popping out at the beginning of movement after residual pressure is released.

3 Reciprocating speed control is possible with a single acting cylinder.

4 The flow rate of the air operated valve and drip prevention valve can be finely adjusted.

MEMO

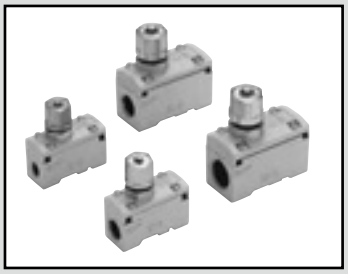

Speed controller Medium bore size

SC1 Series

● Port size: Rc1/8 to Rc1/2

JIS symbol 

RoHS CAD

Specifications

Item		SC1-6	SC1-8	SC1-10	SC1-15
Working fluid		Compressed air			
Max. working pressure MPa		1.0 (≈150 psi, 10 bar)			
Min. working pressure MPa		0.05 (≈7.3 psi, 0.5 bar)			
Proof pressure MPa		1.5 (≈220 psi, 15 bar)			
Fluid temperature °C		5 (41°F) to 60 (140°F) (no freezing *2) (5°C (41°F) to 120°C (248°F) for heat-resistant/ozone-proof specifications)			
Ambient temperature °C		0 (32°F) to 60 (140°F) (no freezing) (5°C (41°F) to 120°C (248°F) for heat-resistant/ozone-proof specifications)			
Port size Rc		1/8	1/4	3/8	1/2
Weight g		100	95	205	195
Cylinder bore size mm		ø20 to ø50	ø32 to ø75	ø50 to ø140	ø80 to ø160
Dial value (needle position)		10	10	10	10
Free flow	Flow rate ℓ/min(ANR)	730	930	2600	2900
	Eff. X-sectional area mm^2	11	14	39	43
Controlled flow	Flow rate ℓ/min(ANR)	530	870	1500	2400
	Eff. X-sectional area mm^2	8	13	22	36

*1: Flow rate is the atmospheric pressure conversion at 0.5 MPa.
*2: Freezing may occur due to adiabatic expansion depending on the air quality (dew point).

How to order

SC1 – 6 – X1

Ⓐ Port size
Ⓑ Option

Code	Description
Ⓐ Port size	
6	Rc1/8
8	Rc1/4
10	Rc3/8
15	Rc1/2
Ⓑ Option 1	
Blank	No option
X1	Heat resistance (120°C or less)/ ozone-proof specifications
P6	Copper and PTFE free specifications

Flow characteristics

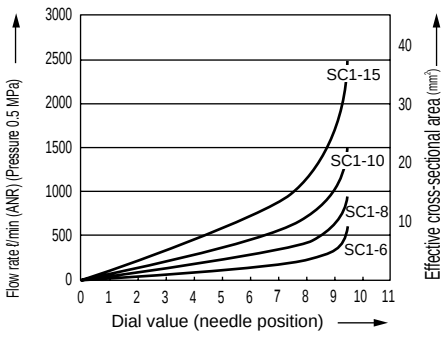

Clean-room specifications

(Catalog No. CB-033SA)

● Anti-dust generation structure for use in cleanrooms

SC1–……–P7*

Internal structure and parts list

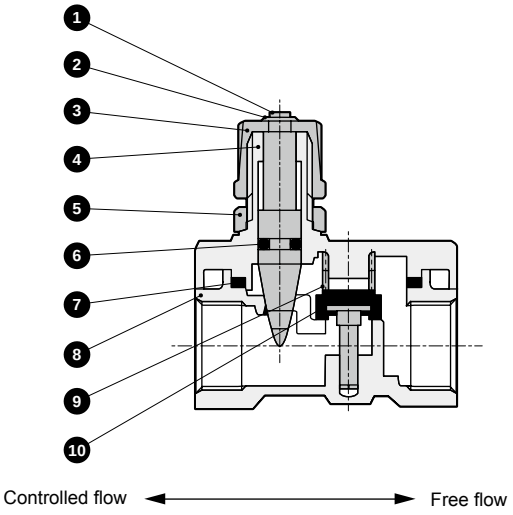

No.	Part name	Material
1	Needle	Copper alloy
2	E type snap ring	Steel
3	Knob	Zinc die-casting
4	Needle guide	Aluminum die-casting
5	Lock nut	Zinc die-casting
6	O-ring	Nitrile rubber (fluoro rubber)
7	Gasket	Nitrile rubber (fluoro rubber)
8	Body	Aluminum die-casting
9	Spring	Stainless steel
10	Valve seat	Copper alloy/nitrile rubber (copper alloy/fluoro rubber)

*1: ( ): Heat resistance/ozone-proof specifications

Dimensions CAD

● SC1

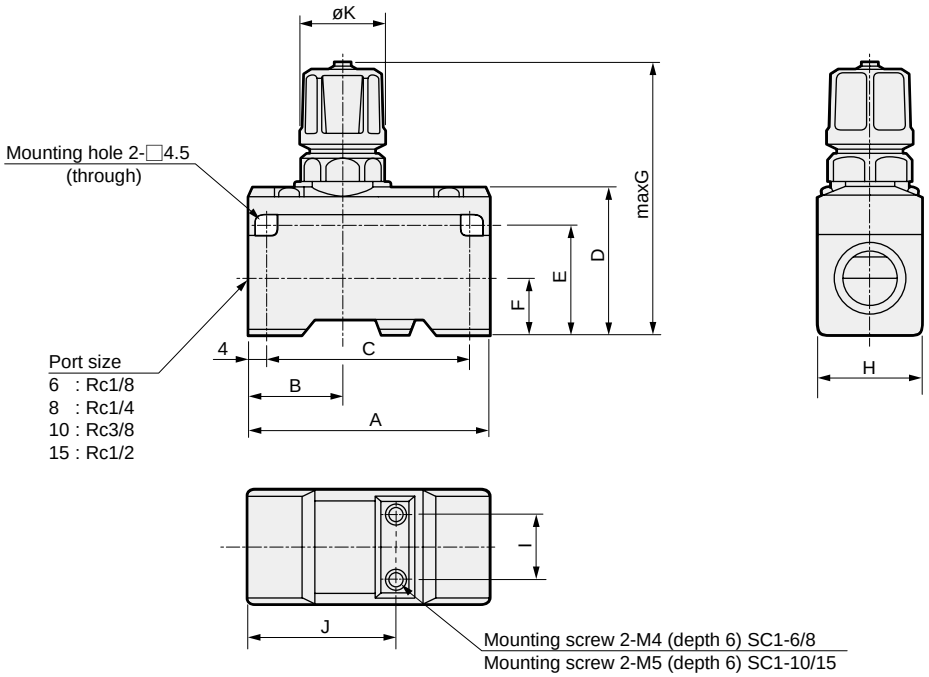

Model No.	A	B	C	D	E	F	G	H	I	J	K
SC1-6/8	50	20	42	31	23	11	67	22	12	31	19
SC1-10/15	63	21	55	40	31	15	83	30	18	37	23

⚠Safety precautions

● When operating in the low pressure range (0.05 MPa or less), or when the piping, etc., before and after the product are excessively constricted, note that vibrating sounds can be easily generated if the cylinder speed is rapid, or if the differential pressure is small.

● When tightening, do not tighten the needle or lock nut section excessively.
(Tightening torque approx. 3 N·m)



Speed controller Large bore size

SC Series

● Port size: Rc3/4 to Rc2

JIS symbol



RoHS CAD

Specifications

Item		SC-20A	SC-25A	SC-32A	SC-40A	SC-50A
Working fluid		Compressed air				
Max. working pressure MPa		1.0 (≈150 psi, 10 bar)		0.7 (≈100 psi, 7 bar)		
Min. working pressure MPa		0.05 (≈7.3 psi, 0.5 bar)		0.05 (≈7.3 psi, 0.5 bar)		
Proof pressure MPa		1.5 (≈220 psi, 15 bar)		1.05 (≈150 psi, 10.5 bar)		
Fluid temperature °C		5 (41°F) to 60 (140°F) (no freezing) *2				
Ambient temperature °C		0 (32°F) to 60 (140°F) (no freezing)				
Port size Rc		3/4	1	1 1/4	1 1/2	2
Weight kg		0.5	0.9	4.0	4.0	4.0
Cylinder bore size mm		ø100 to ø200	ø140 to ø250	ø300 to ø450	ø300 to ø450	ø450 to
Dial value (needle position)		10	10	10	10	10
Mounting orientation		The handle (nut) for flow control must be installed vertically facing upward or downward.				
Free flow	Flow rate ℓ/min(ANR)	10300	17400	68000	68000	97000
	Eff. X-sectional area mm^2	155	260	1000	1000	1500
Controlled flow	Flow rate ℓ/min(ANR)	8300	18700	68000	68000	91000
	Eff. X-sectional area mm^2	125	280	1000	1000	1400

*1: Flow rate is the atmospheric pressure conversion at 0.5 MPa.
*2: Freezing may occur due to adiabatic expansion depending on the air quality (dew point).

How to order

SC – **20A**

Ⓐ Port size

Code	Description
Ⓐ **Port size**	
20A	Rc3/4
25A	Rc1
32A	Rc1 1/4
40A	Rc1 1/2
50A	Rc2

Flow characteristics

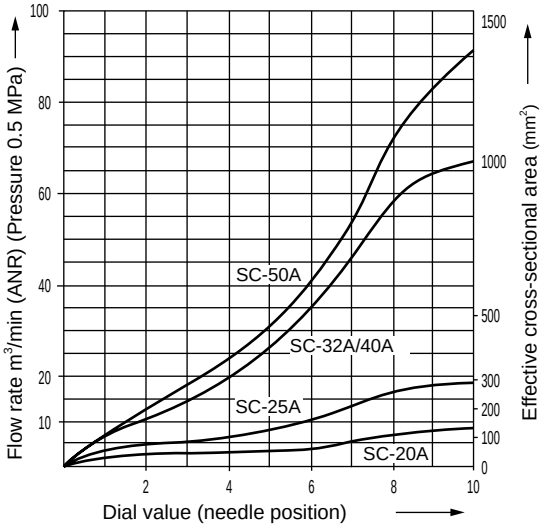

Internal structure and parts list

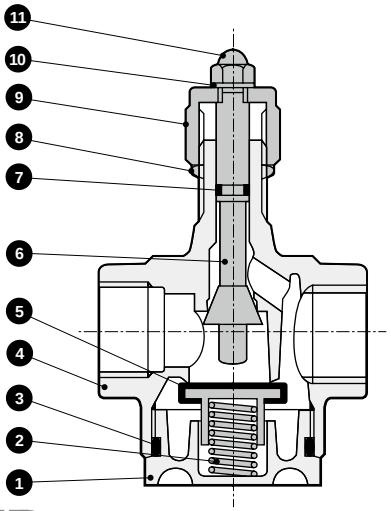

No.	Part name	Material
1	Cap	Aluminum die-casting
2	Spring	Stainless steel
3	O-ring	Nitrile rubber
4	Body	Aluminum die-casting
5	Valve seat	Copper alloy/nitrile rubber
6	Rod	Copper alloy
7	O-ring	Nitrile rubber
8	Nut	Carbon steel or copper alloy
9	Nut	Aluminum die-casting
10	Internal star washer	Stainless steel
11	Cap nut	Steel

Dimensions

● SC-20A

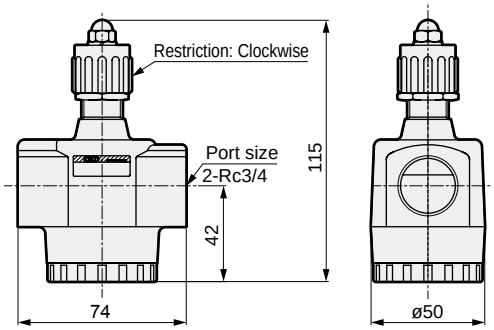

● SC-25A

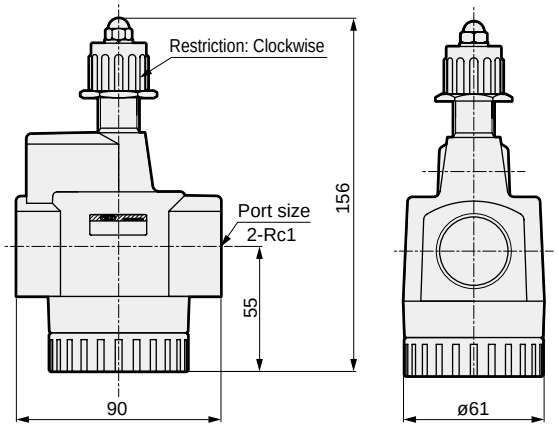

● SC-32A
● SC-40A
● SC-50A

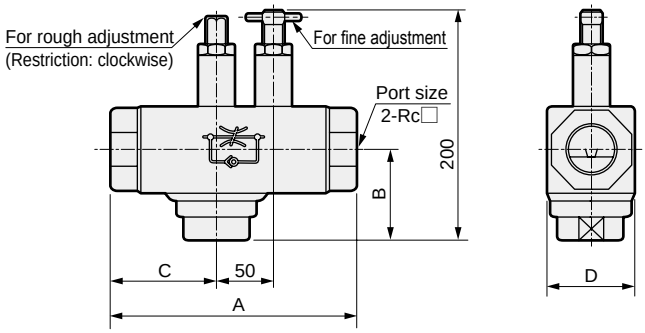

Model No.	A	B	C	D	Port size
SC-32A	210	77	92	75	Rc1 1/4
SC-40A	210	77	92	75	Rc1 1/2
SC-50A	222	79	96	84	Rc2

⚠Safety precautions

When connecting the SC Series, do not tighten the product with a torque greater than what is listed on the right.

- When operating in the low pressure range (0.05 MPa or less), or when the piping, etc., before and after the product are excessively constricted, note that vibrating sounds can be easily generated if the cylinder speed is rapid, or if the differential pressure is small.
- When tightening, do not tighten the needle or lock nut section excessively. (Tightening torque approx. 3 N·m)

Port thread	Tightening torque N·m
Rc3/4	51
Rc1	70
Rc1 1/4	80
Rc1 1/2	85
Rc2	120



Speed controller Medium bore size Outdoor Series

SC1-W Series

● Port size: Rc1/4 to Rc1/2

JIS symbol 

RoHS

Specifications

1 MPa ≈ 145.0 psi, 1 MPa = 10 bar

Item			SC1-8-W	SC1-10-W	SC1-15-W
Working fluid			Compressed air		
Max. working pressure		MPa	1.0 (≈145 psi, 10 bar)		
Min. working pressure		MPa	0.05 (≈8 psi, 1 bar)		
Proof pressure		MPa	1.5 (≈217 psi, 15 bar)		
Fluid temperature		°C	5 (41°F) to 60 (140°F)		
Ambient temperature		°C	-10 (14°F) to 60 (140°F) (no freezing)		
Port size		Rc	1/4	3/8	1/2
Weight		g	95	205	195
Cylinder bore size		mm	ø32 to ø75	ø50 to ø140	ø80 to ø160
Dial value (needle position)			10	10	10
Free flow	Flow rate	ℓ/min (ANR)	930	2600	2900
	Effective cross-sectional area	mm^2	14	39	43
Controlled flow	Flow rate	ℓ/min (ANR)	870	1500	2400
	Effective cross-sectional area	mm^2	13	22	36

*1: Flow rate is the atmospheric pressure conversion at 0.5 MPa.

How to order

SC1 - 8 - W

Ⓐ Port size

Code	Description
Ⓐ Port size	
8	Rc1/4
10	Rc3/8
15	Rc1/2

Flow characteristics

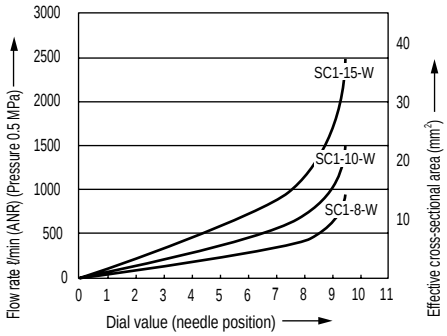

Internal structure and parts list

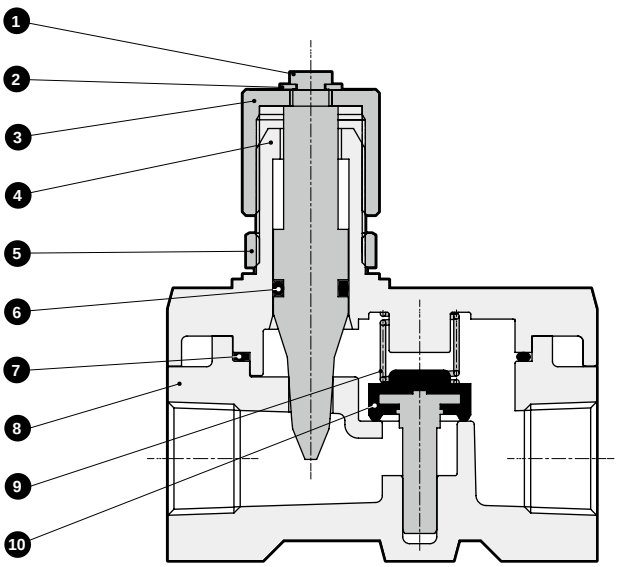

No.	Part name	Material
1	Needle	Stainless steel
2	E type snap ring	Stainless steel
3	Knob	Aluminum
4	Needle guide	Aluminum alloy die-casting
5	Lock nut	Stainless steel
6	O-ring	Fluoro rubber
7	Gasket	Fluoro rubber
8	Body	Aluminum alloy die-casting
9	Spring	Stainless steel
10	Valve seat	Copper alloy/fluoro rubber

Dimensions

● SC1-W

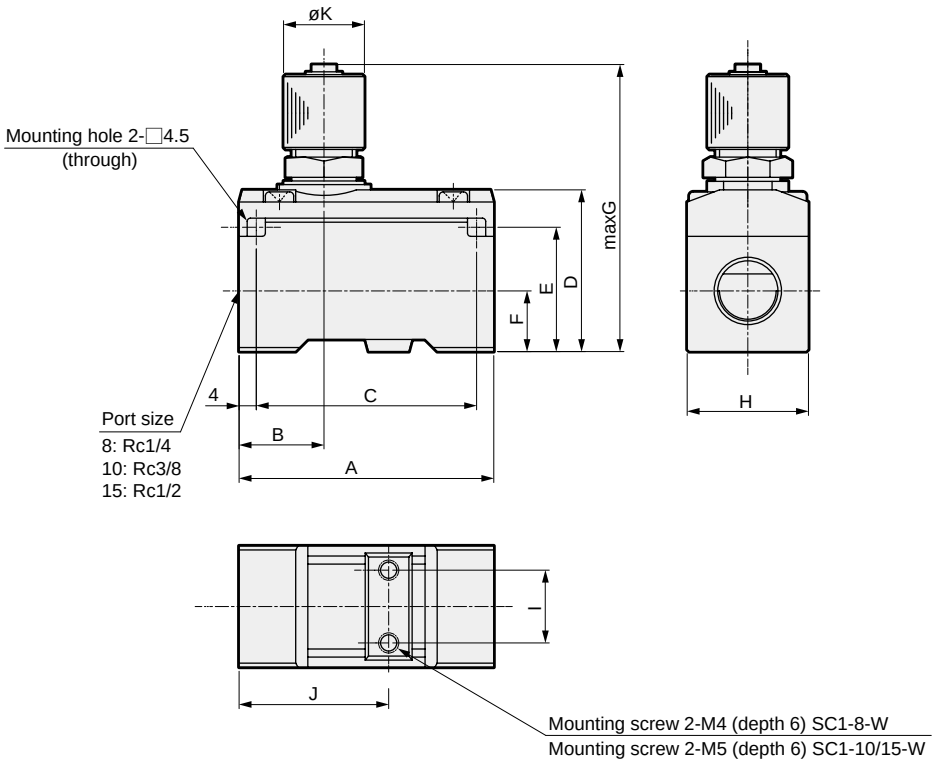

Model No.	A	B	C	D	E	F	G	H	I	J	K
SC1-8-W	50	20	42	31	23	11	67	22	12	31	19
SC1-10/15-W	63	21	55	40	31	15	83	30	18	37	23

Safety precautions

■ Design/selection

⚠WARNING

● This product is for industrial use. Do not use for medical purposes, or in any equipment or circuit that concerns human life.

■ Working environment

● This product has outdoor specifications, but should not be used in the following environments.
- · When the ambient temperature and product temperature exceed the range of -10 to 60°C.(The product temperature is at risk of exceeding the ambient temperature when exposed to direct sunlight.)
- · Where air freezes.
- · In atmospheres containing corrosive gases, liquids and chemicals.
- · Locations with vibration or impact.

⚠CAUTION

● When operating in the low pressure range (0.05 MPa or less), or when the piping, etc., before and after the product is excessively constricted, note that vibrating sounds can be easily generated at fast cylinder speeds or low differential pressure.

■ Working fluids

● Use only compressed air. Air containing corrosive gases, fluids, or chemicals could result in body damage or rubber deterioration.

■ Others

● This product is guaranteed for outdoor use, but not corrosion resistance (no rust or discoloration).

■ Mounting, installation and adjustment

⚠CAUTION

● When tightening, do not tighten the needle or lock nut section excessively.
(Tightening torque approx. 3 N·m)

■ Use/maintenance

⚠WARNING

● Do not disassemble.

⚠CAUTION

● Do not apply a load to the product outside the parameters of use. (Do not climb/step onto the product.)

Safety Precautions

Be sure to read this section before use.
Refer to Intro Page 63 for general precautions regarding pneumatic components and refer to "⚠Safety precautions" for detailed precautions for individual series.

Design/selection

⚠WARNING

■ Do not constantly push down or apply a load onto the push ring for the push-in fitting.
- The tube may lose its holding capacity.
- When transporting an assembled product, avoid positions which constantly press down on the push ring.

⚠CAUTION

■ Use the product in the range of conditions specified for the product.
Consult with CKD when using the product for special applications.
- Use of the product exceeding the specifications range may result in insufficient performance and safety cannot be guaranteed.
- This product may not be usable in special applications and environments.
For example, use for applications requiring safety, including nuclear energy, railways, aircraft, vehicles, medical devices, devices in contact with beverages or foodstuffs, amusement devices, emergency cutoff circuits, press machines, brake circuits, or safety devices or applications.

■ Confirm before use that the product will withstand the working environment.
- Cannot be used in environments where its functions will be impeded.
Such environments include high temperatures, chemical atmospheres, or where chemical liquids, vibration, moisture, water dripping or gas is present. Environments where ozone is generated.
- Do not use the product in a place where it could come in direct contact with coolant or spatter, etc.

■ Understand the characteristics of compressed air before designing a pneumatic circuit.
- The same functions as the mechanical, hydraulic and electrical methods cannot be anticipated if instantaneous stopping and holding are required during an emergency stop.
- Pop-out, air discharge, or leakage due to air compression and expansion may occur.

■ This valve cannot be used as a stop valve that requires no leakage. Slight leakage is allowed for in this product's specifications.

■ Install a "pressure switch" and "residual pressure exhaust valve" on the device's compressed air supply side.
- The pressure switch will disable operation until the set pressure is reached. The residual pressure exhaust valve releases compressed air into the pneumatic pressure circuit to prevent accidents caused by operation of pneumatic components under residual pressure.

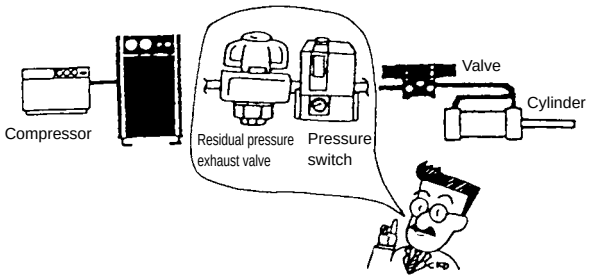

■ Confirm whether PTFE can be used.
The sealant contains PTFE (polytetrafluoroethylene resin) powder. Check that this poses no problem during use.

■ Indicate the maintenance conditions in the device's instruction manual.
- The product's performance may drop too low to maintain an appropriate safety level depending on usage conditions, working environment and maintenance status. With correct maintenance, the product functions can be used to the fullest.

■ Consult with CKD if ozone is generated in the supplied air.
(Ozone-proof products are available.)

■ Rubber parts deteriorate and service life is shortened if ultra dry air is used.

Mounting, installation and adjustment

Piping

⚠CAUTION

■ Do not remove the package or seal cap on the piping port until just before piping the product.
- Removing the piping port cap before piping work may cause foreign matter to enter the pneumatic components from the piping port, resulting in failure or malfunction.

■ When connecting pipes, wrap sealing tape in the opposite direction to the threading, from the inside position to within 2 mm from the pipe end.
- If sealing tape protrudes from the pipe threads, it could be cut when screwing the bolts in. This could cause the tape to enter the pneumatic components, causing failures.

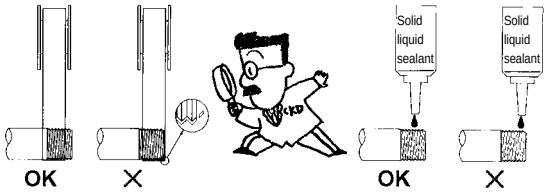

■ M3 and M5 screws are sealed with gaskets.

■ Handling push-in fittings and tubes
- Refer to fitting and tube warnings and cautions (pages 910 to 913) for handling push-in fittings and tubes.

■ Always flush just before piping pneumatic components.
- Any foreign matter that has entered during piping must not enter the pneumatic components.

■ When supplying compressed air after connecting pipes, do not suddenly apply high pressure.
- The pipe connection could dislocate, causing the pipe tube to fly out, leading to accidents.

■ After connecting piping, always check all pipe connections for air leaks before supplying compressed air.
- Apply a leakage detection agent to pipe connections with a brush and check for air leaks.

■ Apply recommended tightening torque when connecting pipes.
- The purpose is to prevent air leakage and damage to bolts.
- First tighten the bolts by hand to ensure that the threads are not damaged, then use a tool.
- Do not tighten while pressure is applied.



[Recommended tightening torque]

Port thread	Tightening torque N·m
M3	0.3 to 0.6
M5	1.0 to 1.5
Rc1/8	3 to 5
Rc1/4	6 to 8
Rc3/8	13 to 15
Rc1/2	16 to 18
Rc3/4	19 to 40
Rc1	41 to 70

■ Connect piping so that connections are not dislocated by equipment movement, vibration, tension, etc.
- Control of actuator speed will be disabled if piping on the exhaust side of the pneumatic circuit is disengaged.
- When using the chuck holding mechanism, the chuck may be released, creating a hazardous state.

■ Around the pneumatic components, keep space for installation, removal and piping work.

■ Install a pneumatic filter just before the pneumatic component in the circuit.

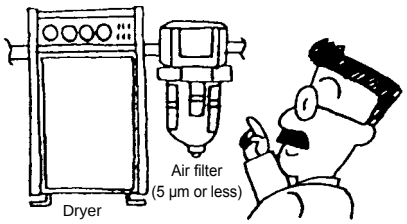

■ Check that lock nuts are not loose.
- Actuator speed cannot be controlled if the lock nut is loose.

■ Check the needle valve speed of rotation.
- The needle valve has dislocation prevention that could break if the needle is turned too far. Check the number of turns for the product used.

■ Confirm the flow direction.
- If installed in reverse, speed adjustment will not function and the actuator could pop out, creating a hazard.

■ Fully close the needle and open to adjust speed.
- If the needle is opened, the actuator could suddenly and dangerously pop out. Ensure that it is closed and then open it.
- The needle closes when turned to the right and opens when turned to the left.

■ Avoid using the product for applications that involve continuous rotation or oscillations.
● Fittings could be damaged.

■ Avoid use in areas with large vibration or impact.

Use/maintenance

⚠WARNING

■ Stop air flow and confirm that there is no residual pressure before replacing the tube.

Silencer

■ Pneumatic auxiliary components



CONTENTS

Series variation	758
● Metering valve with silencer (SMW2)	760
● Metering valve with silencer (FMS, SMW)	762
● Small bore size/resin body (SL/SLW)	764
● High noise reduction/small bore size/resin body (SLW-*A-H)	766
● Large flow rate/small bore size/resin body (SLW-*L)	767
● High noise reduction/compact (SLW-6S/8S)	768
● High noise reduction/compact (SLW-20S)	769
● Push-in (SLW-H*)	770
● Miniature (SLM)	771
● Metal body (SL)	772
● Outdoor Series Metal body (SL-W)	774
⚠ Safety precautions	776
● Exhaust cleaner (FA)	778

Silencer

● High noise reduction effect and 2 types of materials.

Model/outline	Model No.	Port size (R)														Effective cross-sectional area (mm^2)	Flow rate (ℓ/min) ANR Pressure 0.5 MPa	Cylinder bore size (mm)	Page
		M3	M5	1/8	1/4	3/8	1/2	3/4	1	1 1/4	1 1/2	2	ø6	ø8	ø10	ø12			
● Metering valve with silencer 	SMW2-6A			●													5.6	370	ø20 to ø50	760
	SMW2-8A				●												9.9	660	ø32 to ø75	
	FMS-M5		●														4	250	ø6 to ø15	762
	SMW-10A					●											25	1700	ø50 to ø100	
	SMW-15A						●										39	2600	ø50 to ø100	
● Small bore size 	SL-M5		●														5	300	ø6 to ø15	764
● Resin body 	SLW-6A/6N			●													10	650	ø20 to ø80	
	SLW-8A/8N				●												20	1300	ø32 to ø80	
	SLW-10A/10N					●											30	2000	ø50 to ø100	
	SLW-15A/15N						●										75	4850	ø50 to ø100	
● High noise reduction/ small bore size/ resin body 	SLW-8A-H				●												15	1000	ø32 to ø80	766
	SLW-10A-H					●											30	2000	ø50 to ø100	
	SLW-15A-H						●										50	3250	ø50 to ø100	
● Large flow rate/ small bore size/ resin body 	SLW-8L				●												30	2000 or more	ø32 to ø80	767
	SLW-10L					●											60	4000 or more	ø50 to ø100	
● High noise reduction/ compact 	SLW-6S			●													12	800	ø20 to ø80	768
	SLW-8S				●												30	1900	ø32 to ø80	
	SLW-20S							●									90	6000	ø100 to ø200	769

Model/outline	Model No.	Port size (Rc or R)															Effective cross-sectional area (mm^2)	Flow rate (ℓ/min) ANR At 0.5 MPa	Cylinder bore size (mm)	Page
		M3	M5	1/8	1/4	3/8	1/2	3/4	1	1 1/4	1 1/2	2	ø6	ø8	ø10	ø12				
● Push-in 	SLW-H6												●				7	455	ø20 to ø40	770
	SLW-H8													●			8.5	550		
	SLW-H10														●		17.5	1135		
	SLW-H12															●	25.5	1655		
● Miniature 	SLM-M3	●															1	60 or more	ø6 or less	771
	SLM-M5		●														5	350 or more	ø6 to ø15	
● Aluminum body 	SL-8A				●												36	2400	ø50 to ø100	772
	SL-10A					●											48	3200	ø63 to ø140	
	SL-15A						●										61	4100	ø75 to ø180	
	SL-20A							●									160	12000	ø100 to ø250	
	SL-25A								●								210	14000	ø140 to ø250	
	SL-32A									●							280	18000	ø140 to ø450	
	SL-40A										●						320	21000	ø140 to ø450	
	SL-50A											●					500	33000	ø300 to ø450	
● Outdoor Series Metal body 	SL-8A-W				●												36	2400	ø50 to ø100	774
	SL-10A-W					●											48	3200	ø63 to ø140	
	SL-15A-W						●										61	4100	ø75 to ø180	

Model/outline	Model No.	Port size (Rc)															Effective cross-sectional area (mm^2)	Max. processing flow rate m^3/min (ANR)	Page
		M3	M5	1/8	1/4	3/8	1/2	3/4	1	1 1/4	1 1/2	2	ø6	ø8	ø10	ø12			
● Exhaust cleaner 	FA331					●											16	0.3	778
	FA431						●										33	0.6	
	FA531							●									55	1	
	FA631								●								165	3	
	FA731										●						330	6	
	FA831											●					550	10	



Metering valve with silencer

SMW2 Series

● Port size: R1/8 to R1/4

JIS symbol 

RoHS CAD

Features

● Compact/lightweight/high flow rate
Volume reduced by 50% and weight reduced by 80% compared with conventional series, while max. effective cross-sectional area in the class is achieved.

● Noise reduction effect 23 dB (A) and over
P.P. sintering element with high damping effect integrated into the body to maintain low noise level.

● Uses a push lock needle
Knob with push lock mechanism enables easy and secure locking.

● Environmental friendly design
By using plastic material only, sorting at disposal is eliminated.

Specifications

Item	SMW2-6A	SMW2-8A
Working fluid	Compressed air	
Max. working pressure MPa	0.7 (≈100 psi, 7 bar)	
Min. working pressure MPa	0 (≈0 psi, 0 bar)	
Proof pressure MPa	1.05 (≈150 psi, 10.5 bar)	
Fluid temperature °C	5 (41°F) to 60 (140°F)	
Ambient temperature °C	-10 (14°F) to 60 (140°F) (no freezing)	
Ambient humidity %RH	85 or less	
Port size R	1/8	1/4
Weight g	4.5	5
Cylinder bore size mm	ø20 to ø50	ø32 to ø75
Dial value (needle position)	9	
Noise reduction effect (*2) dB [A]	23 or more	28 or more
Flow rate (*1) ℓ/min(ANR)	370	660
Effective cross-sectional area mm^2	5.6	9.9

*1: Flow rate is the atmospheric pressure conversion at 0.5 MPa.
*2: Noise reduction effect at maximum flow rate is shown.

How to order

SMW2 - 6A

Code	Description
Ⓐ **Port size**	
6A	R1/8
8A	R1/4

Flow characteristics

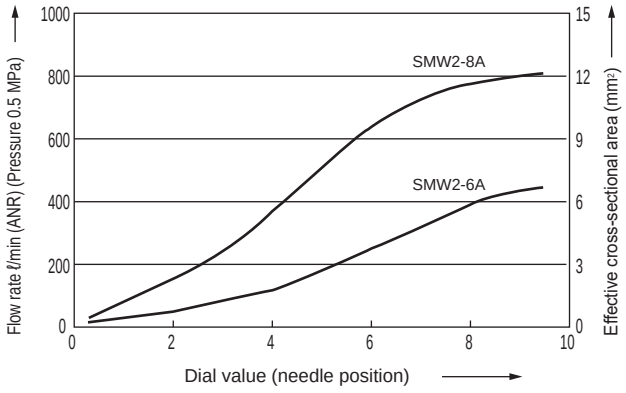

Internal structure and parts list

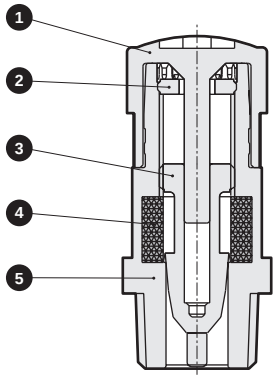

No.	Part name	Material
1	Knob	Polybutylene terephthalate
2	Guide ring	Polyamide
3	Needle	Polyamide
4	Element	PP sintered resin
5	Body	Polyamide

Dimensions CAD

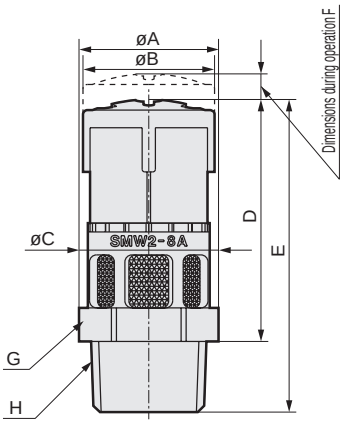

Code / Model No.	A	B	C	D	E	F	G Hexagon	H Port size
SMW2-6A	13.5	14.9	13.8	27.4	35.4	2.9	12	R1/8
SMW2-8A	15.8						14	R1/4

Usage methods

- The needle lock is released when the knob is pulled, and is locked when pressed.
- Pull the knob and release the lock before adjusting the flow rate.
  The knob opens when turned to the right and closes when turned to the left.
- Return the knob to the closed state and gradually open it to adjust speed.
- After adjusting speed, press the knob and confirm that the needle is locked.

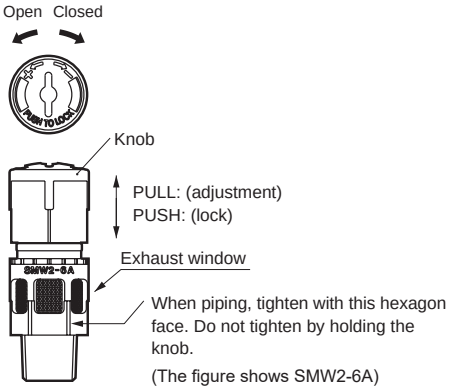

⚠Safety precautions

■ Design/selection

- This valve cannot be used as a stop valve that requires no leakage.
  Slight leakage is allowed for in this product's specifications.
- Depending on air quality (dew point), the exhaust port could freeze due to adiabatic expansion.

■ Mounting, installation and adjustment

- The needle is designed to open and close by turning lightly by hand. Turning the needle too far when fully opened or closed could damage internal parts.
- Return the knob to the closed state and gradually open it to adjust speed. If the needle is opened, the actuator could suddenly and dangerously pop out.
- The tightening torque for the port thread is shown in Table 1. Because screws loosen easily under high temperatures, mount with the upper torque limit (1.0 N·m) when the ambient temperature is 40˚C or more.

Model No.	Tightening torque (N·m)
SMW2-6A	0.5 to 1.0
SMW2-8A	0.5 to 1.0

Table 1 Recommended tightening torque

- When piping, use a tool and tighten with the hexagon face below the exhaust window.
  Do not tighten or remove pipes with the knob. Internal damage could result.
- Sealant is not applied on thread part. If used in this state, screws do not loosen, but some leakage could result. When using in low speed range, wrap sealing tape around the joint.

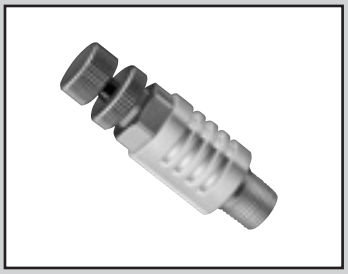

Metering valve with silencer

FMS/SMW Series

● Port size: M5 / R3/8 / R1/2

JIS symbol

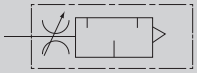

RoHS CAD

Specifications

Item	FMS-M5	SMW-10A	SMW-15A
Working fluid	Compressed air		
Max. working pressure MPa	0.7 (≈100 psi, 7 bar)		
Min. working pressure MPa	0 (≈0 psi, 0 bar)		
Proof pressure MPa	1.05 (≈150 psi, 10.5 bar)		
Fluid temperature °C	5 (41°F) to 60 (140°F) (no freezing. *3)		
Ambient temperature °C	-10 (14°F) to 60 (140°F) (no freezing)		
Port size R	M5	3/8	1/2
Weight g	6	125	170
Cylinder bore size mm	ø6 to ø15	ø50 to ø100	ø50 to ø100
Dial value (needle position)	10	19	19
Noise reduction effect *2 dB	20 or more		
Flow rate *1 ℓ/min (ANR)	250	1700	2600
Effective cross-sectional area mm^2	4	25	39

*1: Flow rate is the atmospheric pressure conversion at 0.5 MPa.
*2: Noise reduction effect at maximum flow rate is shown.
*3: Freezing may occur due to adiabatic expansion depending on the air quality (dew point).

How to order

FMS – M5

Ⓐ Port size

Code	Description
Ⓐ Port size	
M5	M5×0.8

Note: Sales unit is 2 pcs./bag.

SMW – 10A

Ⓐ Port size

Code	Description
Ⓐ Port size	
10A	R3/8
15A	R1/2

Internal structure and parts list/dimensions

● FMS-M5

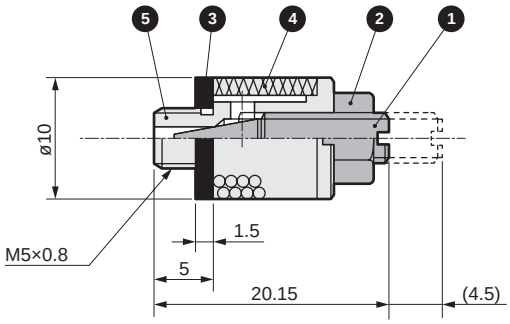

No.	Part name	Material
1	Needle	Copper alloy
2	Lock nut	Copper alloy
3	Gasket	Nitrile rubber
4	Filter	Copper alloy casting
5	Valve body	Copper alloy

● SMW-10A/15A

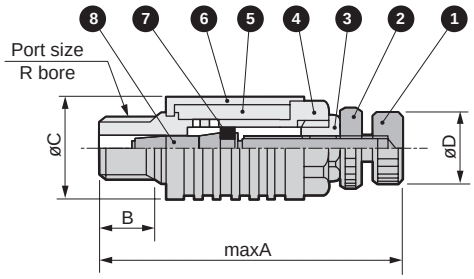

Model No.	A	B	C	D	Port size
SMW-10A	85	12	25	16	R3/8
SMW-15A	98	15	28	16	R1/2

No.	Part name	Material	No.	Part name	Material
1	Knob	Copper alloy	5	Sound absorbent material	Felt
2	Lock nut	Copper alloy	6	Cover	Polyamide resin
3	Gland nut	Copper alloy	7	O-ring	Nitrile rubber
4	Shaft body	Copper alloy	8	Spindle	Copper alloy

Flow characteristics

● FMS

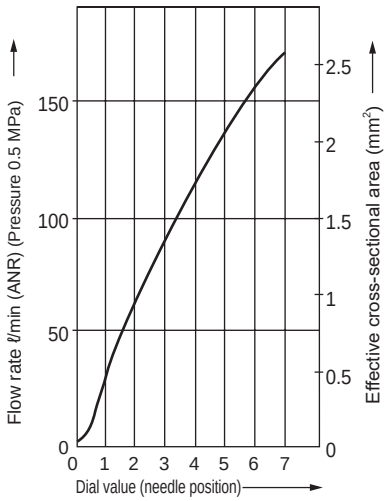

● SMW-10A/15A

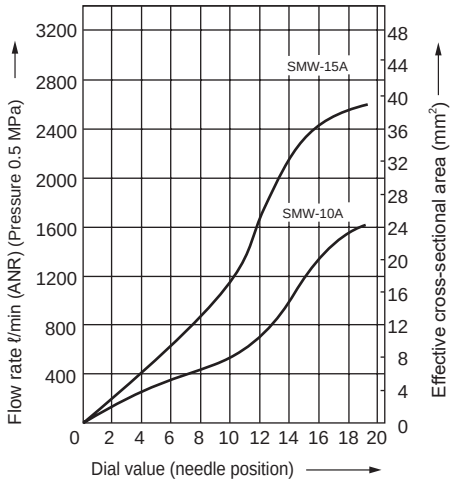

⚠ Safety precautions

● Tightening torque

Thread size	Tightening torque (N·m)
M5	1.0
R3/8	3.0
R1/2	3.0



Silencer Small bore size/resin body

SL/SLW Series

Noise reduction effect of 30 dB [A] or more.

● Port size: M5 / R1/8 to R1/2

JIS symbol

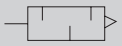

RoHS CAD

Specifications

Item	SL-M5	SLW-6□	SLW-8□	SLW-10□	SLW-15□
Working fluid	Compressed air				
Max. working pressure MPa	1.0 (≈150 psi, 10 bar)				
Min. working pressure MPa	0 (≈0 psi, 0 bar)				
Proof pressure MPa	1.5 (≈220 psi, 15 bar)				
Fluid temperature °C	5 (41°F) to 60 (140°F) (no freezing. *2)				
Ambient temperature °C	-10 (14°F) to 60 (140°F) (no freezing)				
Port size R/NPT/G	M5	1/8	1/4	3/8	1/2
Weight g	5	3.5	7.5	15	21
Cylinder bore size mm	ø6 to ø15	ø20 to ø80	ø32 to ø80	ø50 to ø100	ø50 to ø100
Noise reduction effect dB	20 or more	30 or more			
Flow rate *1 ℓ/min (ANR)	300	650	1300	2000	4850
Effective cross-sectional area mm^2	5	10	20	30	75

*1: Flow rate is the atmospheric pressure conversion at 0.5 MPa.
*2: Freezing may occur due to adiabatic expansion depending on the air quality (dew point).

How to order

SL – M5

Ⓐ Port size	
M5	M5×0.8

Note: Sales unit is 2 pcs./bag.

SLW – 6A

Ⓐ Port size	
6A	R1/8
6N	NPT1/8
6G	G1/8
8A	R1/4
8N	NPT1/4
8G	G1/4
10A	R3/8
10N	NPT3/8
10G	G3/8
15A	R1/2
15N	NPT1/2
15G	G1/2

Internal structure and parts list/dimensions

● SL-M5

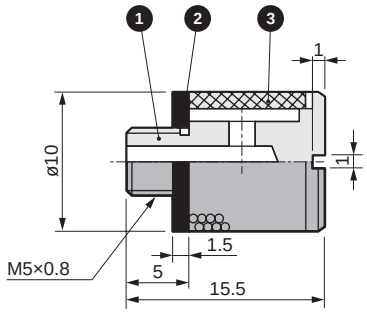

No.	Part name	Material
1	Body	Copper alloy
2	Gasket	Nitrile rubber
3	Element	Copper alloy sintering

● SLW-6A/8A/10A/15A

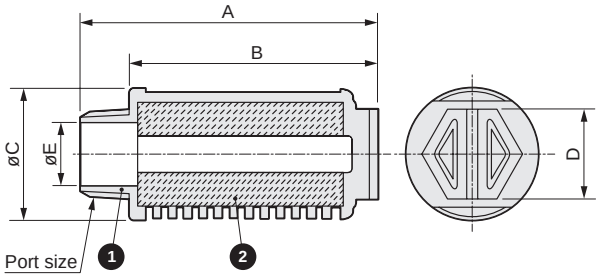

No.	Part name	Material	Color
1	Body	Polyamide resin (flame-resistant resin *)	White
2	Element	PP sintered resin	White

* UL94 Standards V-0 equivalent

Model No.	A	B	C	D	E	Port size	
						A	N
SLW-6□	34	28	16.5	10	7	R1/8	NPT1/8
SLW-8□	44.5	36	20	13	8.5	R1/4	NPT1/4
SLW-10□	58.5	48.5	25.5	17	12	R3/8	NPT3/8
SLW-15□	71.4	58.4	28	19	15	R1/2	NPT1/2

⚠ Safety precautions

● Use tightening torque equivalent to the tightening strength of a human hand. (Refer to the table below for tightening torque guidelines.)

Thread size	Tightening torque (N·m)
M5	1.0
R1/8	1.0
R1/4	2.5
R3/8	3.0
R1/2	3.0



Silencer: High noise reduction/small bore size/resin body

SLW-*A-H Series

● Port size: Rc 1/4 to Rc 1/2

JIS symbol 

RoHS CAD

Specifications

Item	SLW-8A-H	SLW-10A-H	SLW-15A-H
Working fluid	Compressed air		
Max. working pressure MPa	1.0 (≈150 psi, 10 bar)		
Min. working pressure MPa	0 (≈0 psi, 0 bar)		
Proof pressure MPa	1.5 (≈220 psi, 15 bar)		
Fluid temperature °C	5 (41°F) to 60 (140°F) (no freezing. *2)		
Ambient temperature °C	-10 (14°F) to 60 (140°F) (no freezing)		
Port size R	1/4	3/8	1/2
Weight g	7.5	15	21
Cylinder bore mm	ø32 to ø80	ø50 to ø100	ø50 to ø100
Noise reduction effect dB [A]	40 or more		
Flow rate *1 ℓ/min (ANR)	1000	2000	3250
Effective cross-sectional area mm^2	15	30	50

*1: Flow rate is the atmospheric pressure conversion at 0.5 MPa.
*2: Freezing may occur due to adiabatic expansion depending on the air quality (dew point).

How to order

SLW – 8A – H

Ⓐ Port size	
8A	R1/4
10A	R3/8
15A	R1/2

⚠ Safety precautions

● Use tightening torque equivalent to the tightening strength of a human hand and do not apply a lateral load. (Refer to the table below for tightening torque guidelines.)

Thread size	Tightening torque (N·m)
R1/4	2.5
R3/8	3.0
R1/2	3.0

Internal structure and parts list/dimensions

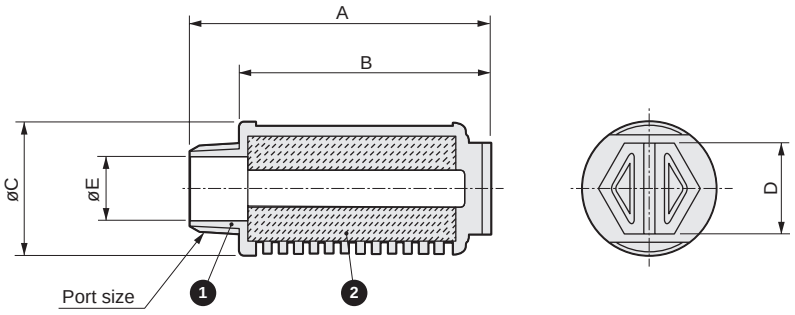

No.	Part name	Material	Color
1	Body	Polyamide resin (flame-resistant resin *)	White
2	Element	PP sintered resin	Light yellow

* UL94 Standards V-0 equivalent

Model No.	A	B	C	D	E	Port size
SLW-8A-H	44.5	36	20	13	8.5	R1/4
SLW-10A-H	58.5	48.5	25.5	17	12	R3/8
SLW-15A-H	71.4	58.4	28	19	15	R1/2



Silencer: Large flow rate/small bore size/resin body

SLW-*L Series

● Port size: R1/4 / R3/8

JIS symbol 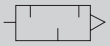

RoHS CAD

Specifications

Item		SLW-8L	SLW-10L
Working fluid		Compressed air	
Max. working pressure	MPa	1.0 (≈150 psi, 10 bar)	
Min. working pressure	MPa	0 (≈0 psi, 0 bar)	
Proof pressure	MPa	1.5 (≈220 psi, 15 bar)	
Fluid temperature	°C	5 (41°F) to 60 (140°F) (no freezing. *2)	
Ambient temperature	°C	-10 (14°F) to 60 (140°F) (no freezing)	
Port size	R	1/4	3/8
Weight	g	15	19.5
Cylinder bore	mm	ø32 to ø80	ø50 to ø100
Noise reduction effect	dB [A]	30 or more	
Flow rate *1	ℓ/min(ANR)	2000	4000
Effective cross-sectional area	mm^2	30	60

*1: Flow rate is the atmospheric pressure conversion at 0.5 MPa.
*2: Freezing may occur due to adiabatic expansion depending on the air quality (dew point).

How to order

SLW – 8L

Ⓐ Port size	
8L	R1/4
10L	R3/8

⚠ Safety precautions

● Use tightening torque equivalent to the tightening strength of a human hand. (Refer to the table below for tightening torque guidelines.)

Thread size	Tightening torque (N·m)
R1/4	2.5
R3/8	3.0

Internal structure and parts list/dimensions

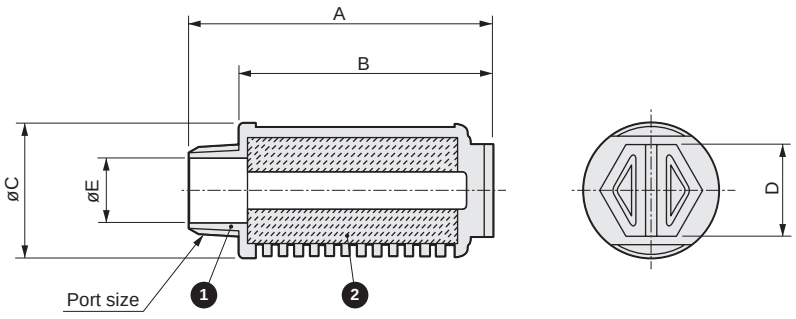

No.	Part name	Material	Color
1	Body	Polyamide resin (flame-resistant resin *)	White
2	Element	PP sintered resin	White

* UL94 Standards V-0 equivalent

Model No.	A	B	C	D	E	Port size
SLW-8L	57.4	48.5	25.5	17	8.5	R1/4
SLW-10L	68.2	58.4	28	19	12	R3/8



Silencer: High noise reduction/compact

SLW-6S/8S Series

Compact and lightweight, with a noise reduction effect of 25 dB [A] and over

JIS symbol 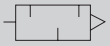

RoHS CAD

Specifications

Item	SLW-6S	SLW-8S
Working fluid	Compressed air	
Max. working pressure MPa	1.0 (≈150 psi, 10 bar)	
Min. working pressure MPa	0 (≈0 psi, 0 bar)	
Proof pressure MPa	1.5 (≈220 psi, 15 bar)	
Fluid temperature °C	5 (41°F) to 60 (140°F) (no freezing. *2)	
Ambient temperature °C	-10 (14°F) to 60 (140°F) (no freezing)	
Port size R	1/8	1/4
Weight g	1.0	2.0
Cylinder bore mm	ø20 to ø80	ø32 to ø80
Noise reduction effect dB [A]	25 or more	28 or more
Flow rate *1) ℓ/min(ANR)	800	1900
Effective cross-sectional area mm^2	12	30

*1: Flow rate is the atmospheric pressure conversion at 0.5 MPa.
*2: Freezing may occur due to adiabatic expansion depending on the air quality (dew point).

How to order

SLW – 8 S

Ⓐ Port size	
6	R1/8
8	R1/4

⚠Safety precautions

Use tightening torque equivalent to the tightening strength of a human hand.
(Refer to the table below for tightening torque guidelines.)

Thread size	Tightening torque (N·m)
R1/8	0.1 to 0.15
R1/4	0.15 to 0.25

Dimensions and internal structure CAD

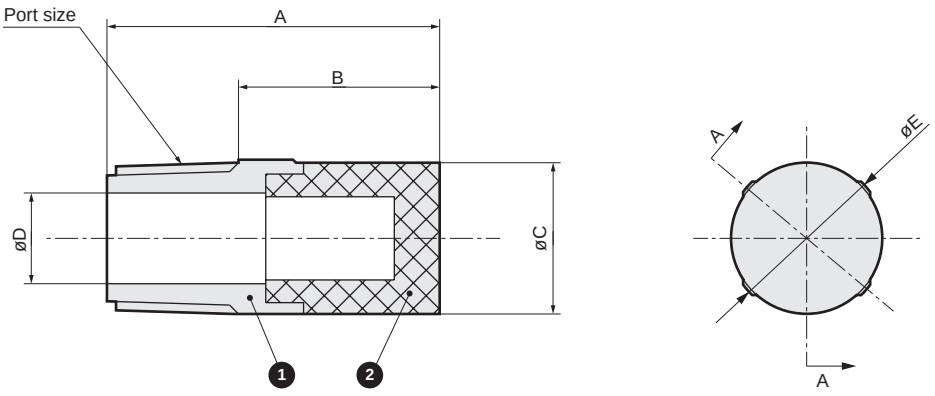

Cross-section A-A

No.	Part name	Material	Color
1	Body	PP	White
2	Element	PP sintered resin	White

Model No.	Port size	A	B	C	D	E
SLW-6S	R1/8	22	13.3	10.5	6	10.5
SLW-8S	R1/4	28	19	14.8	9	15.4



Silencer: High noise reduction/compact

SLW-20S Series

Compact with a noise reduction effect of 30 dB [A] and over

JIS symbol 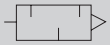

Specifications

Item	SLW-20S
Working fluid	Compressed air
Max. working pressure MPa	1.0 (≈150 psi, 10 bar)
Min. working pressure MPa	0 (≈0 psi, 0 bar)
Proof pressure MPa	1.5 (≈220 psi, 15 bar)
Fluid temperature °C	5 (41°F) to 60 (140°F) (no freezing. *2)
Ambient temperature °C	-10 (14°F) to 60 (140°F) (no freezing)
Port size R	3/4
Weight g	20
Cylinder bore mm	ø100 to ø200
Noise reduction effect dB [A]	30 or more
Flow rate *1) ℓ/min(ANR)	6000
Effective cross-sectional area mm^2	90

*1: Flow rate is the atmospheric pressure conversion at 0.5 MPa.
*2: Freezing may occur due to adiabatic expansion depending on the air quality (dew point).

How to order

SLW – 20 S

Ⓐ Port size	
20	R3/4

Safety precautions

Use tightening torque equivalent to the tightening strength of a human hand.
(Refer to the table below for tightening torque guidelines.)

Thread size	Tightening torque (N·m)
R3/4	3.0

Dimensions and internal structure

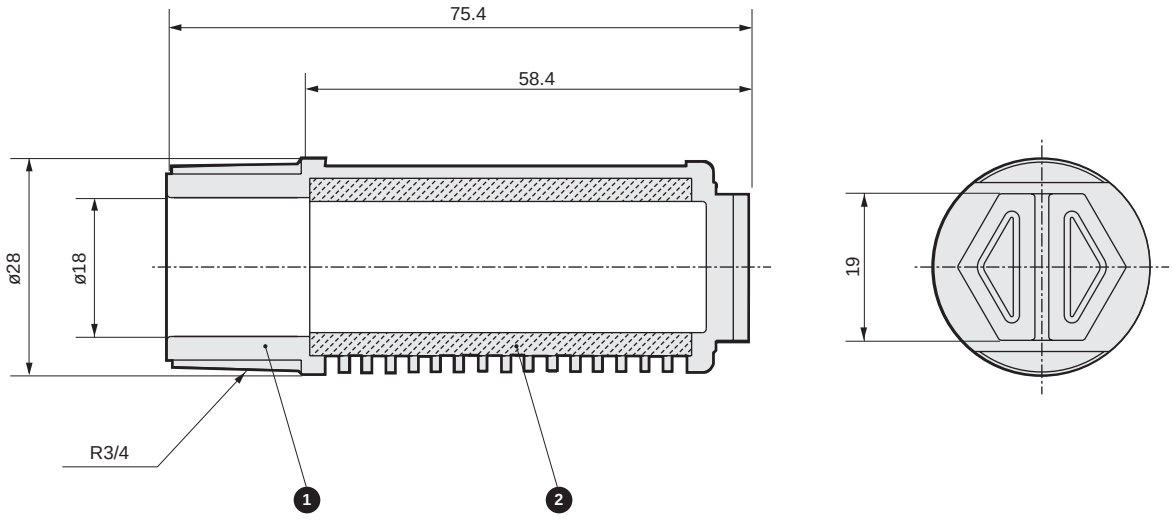

No.	Part name	Material	Color
1	Body	Polyamide resin (flame-resistant resin *)	White
2	Element	PP sintered resin	White

* UL94 Standards V-0 equivalent

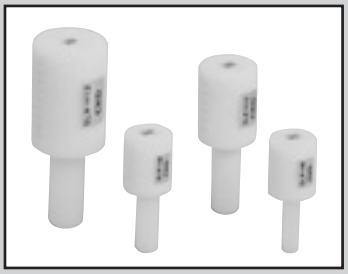

Silencer Push-in

SLW-H* Series

● Port size: ø6, ø8, ø10, ø12

JIS symbol 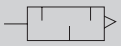

RoHS CAD

Specifications

Item	SLW-H6	SLW-H8	SLW-H10	SLW-H12
Working fluid	Compressed air			
Max. working pressure MPa	0.7 (≈100 psi, 7 bar)			
Min. working pressure MPa	0 (≈0 psi, 0 bar)			
Proof pressure MPa	1.05 (≈150 psi, 10.5 bar)			
Fluid temperature °C	5 (41°F) to 60 (140°F) (no freezing. *2)			
Ambient temperature °C	-10 (14°F) to 60 (140°F) (no freezing)			
Port size	ø6	ø8	ø10	ø12
Weight g	3.5	3.5	6.2	12.5
Noise reduction effect dB(A)	20 or more			
Flow rate *1 ℓ/min	455	550	1135	1655
Effective cross-sectional area mm^2	7	8.5	17.5	25.5

*1: Flow rate is the atmospheric pressure conversion at 0.5 MPa.
*2: Freezing may occur due to adiabatic expansion depending on the air quality (dew point).

How to order

SLW - H6

Ⓐ Port size	
H6	ø6
H8	ø8
H10	ø10
H12	ø12

Dimensions and internal structure

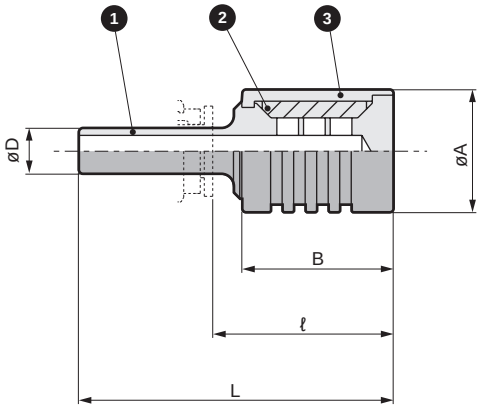

No.	Part name	Material
1	Shaft body	Polyamide resin
2	Element	Felt
3	Cover	Polyamide resin

Model No.	A	B	D	L	ℓ*
SLW-H6	16	20	ø6	41	23.5
SLW-H8	16	20	ø8	42	23
SLW-H10	20	27	ø10	53	31.5
SLW-H12	25	37	ø12	66	43

* For connection fitting, dimensions of CKD (GW Series) are shown.

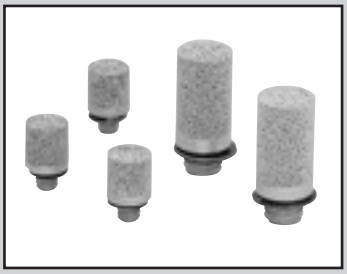

Silencer: Miniature

SLM Series

Compact with a noise reduction effect of 20 dB [A] and over

JIS symbol 

RoHS CAD

Specifications

Item	SLM-M3	SLM-M5
Working fluid	Compressed air	
Max. working pressure MPa	1.0 (≈150 psi, 10 bar)	
Min. working pressure MPa	0 (≈0 psi, 0 bar)	
Proof pressure MPa	1.5 (≈220 psi, 15 bar)	
Fluid temperature °C	5 (41°F) to 60 (140°F) (no freezing. *2)	
Ambient temperature °C	-10 (14°F) to 60 (140°F) (no freezing)	
Port size	M3	M5
Weight g	1.0	3.0
Cylinder bore mm	ø6 or less	ø6 to ø15
Noise reduction effect dB [A]	20 or more	
Flow rate *1) ℓ/min(ANR)	60	350
Effective cross-sectional area mm^2	1	5

*1: Flow rate is the atmospheric pressure conversion at 0.5 MPa.
*2: Freezing may occur due to adiabatic expansion depending on the air quality (dew point).

How to order

SLM - M3

Ⓐ Port size

Ⓐ Port size	
M3	M3
M5	M5

Note: Sales unit is 10 pcs./bag.

⚠Safety precautions

- Use tightening torque equivalent to the tightening strength of a human hand.
  (Refer to the table below for tightening torque guidelines.)

Thread size	Tightening torque (N·m)
M3	0.1 to 0.15
M5	0.2 to 0.25

- Avoid use in areas with large vibration or impact. Provide measures against loosening in such areas.

Dimensions and internal structure CAD

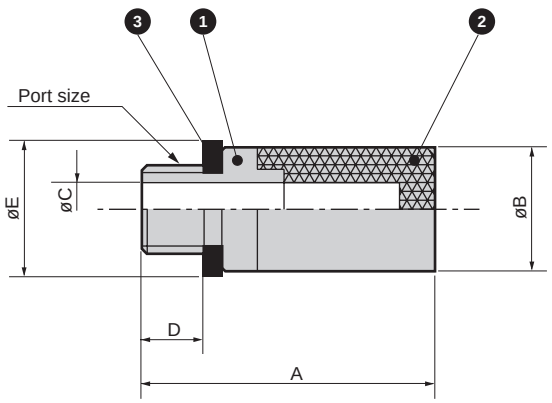

No.	Part name	Material	Color
1	Body	Copper alloy	Silver
2	Element	Copper alloy sintering	Silver
3	Gasket	Nitrile rubber + steel	—

Model No.	A	B	C	D	E	Port size
SLM-M3	9	5.5	1.4	2.6	4.9	M3×0.5
SLM-M5	16.5	7	3	3.4	7.8	M5×0.8



Silencer: Metal body

SL Series

● Port size: R1/4 to R2

JIS symbol 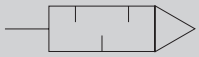

RoHS CAD

Features

● SL-8A to 25A has been upgraded, integrating the entire series in a lightweight, compact design.
- Weight ratio (SL-8A to 25A) reduced by 50% or more compared to conventional CKD model

● The replaceable element extends product life.

● The product is eco-friendly.
- Chromate treatment (hexavalent chromium) has been eliminated.
- The coating has been eliminated.
- Segregated disposal is possible.

● Noise reduction effect of 20 dB [A] or higher

Specifications

Item	SL-8A	SL-10A	SL-15A	SL-20A	SL-25A	SL-32A	SL-40A	SL-50A
Working fluid	Compressed air							
Max. working pressure MPa	0.9							
Min. working pressure MPa	0							
Proof pressure MPa	1.35							
Fluid temperature °C	5 to 60 (no freezing. *2)							
Ambient temperature °C	-10 to 60 (no freezing)							
Port size R	1/4	3/8	1/2	3/4	1	1 1/4	1 1/2	2
Weight g	75	100	105	245	250	450	450	650
Compatible cylinder Tube Diameter	ø50 to ø100	ø63 to ø140	ø75 to ø180	ø100 to ø250	ø140 to ø250	ø140 to ø450	ø140 to ø450	ø300 to ø450
Noise reduction effect dB [A]	20 or more							
Flow rate *1 ℓ/min(ANR)	2400	3200	4100	12,000	14,000	17,000	17,500	33,000
Effective cross-sectional area mm^2	36	48	61	160	210	250	260	500

*1: Flow rate is the atmospheric pressure conversion value at pressure 0.5 MPa
*2: Freezing may occur due to adiabatic expansion depending on the air quality (dew point).

How to order

SL - 8A

● Replacement element

SL - 8A - EL

Ⓐ Port size	
8A	R1/4
10A	R3/8
15A	R1/2
20A	R3/4
25A	R1
32A	R1 1/4
40A	R1 1/2
50A	R2

Dimensions/internal structure and main parts list

● SL-8A to 50A

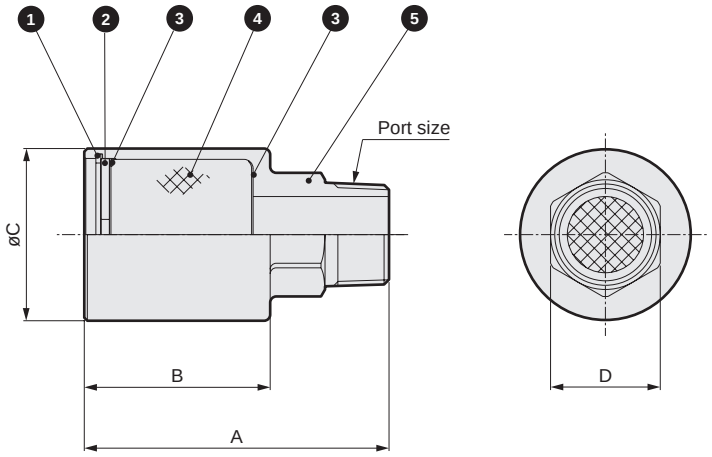

Model No.	Port size	A	B	øC	D
SL-8A	R1/4	64	41	30	17
SL-10A	R3/8	74.5	49.5	36	24
SL-15A	R1/2	77.5	49.5	36	24
SL-20A	R3/4	98	61	56	36
SL-25A	R1	100	61	56	36
SL-32A	R1 1/4	100	58	72	55
SL-40A	R1 1/2	100	58	72	55
SL-50A	R2	108	58	89	70

No.	Part name	Material
1	C-snap ring	Steel (8A to 25A)
		Stainless steel (32A to 50A)
2	Perforated metal	Steel
3	Wire mesh	Stainless steel
4	Element	Vinylidene chloride (8A to 25A)
		Urethane (32A to 50A)
5	Body	Aluminum alloy

Safety precautions

· Tighten pipes with the appropriate torque.
· Check that the C-snap ring does not pop off when removed or attached.
· Assemble the C-snap ring accurately when replacing the element.
Parts used inside could pop out and cause problems if assembly is not complete.
· Depending on work, the silencer could clog and reduce exhaust.
Service the product by replacing the element regularly.
· Silencing values are based on JIS standards. Silencing could vary with the type of circuit and pressure used.

[Recommended tightening torque]

Port thread	Tightening torque N·m
R1/4	6 to 8
R3/8	13 to 15
R1/2	16 to 18
R3/4	19 to 40
R1	41 to 70
R1 1/4	43 to 75
R1 1/2	45 to 80
R2	47 to 85



Silencer Metal body Outdoor Series

SL-W Series

● Port size: R1/4 to R1/2

JIS symbol 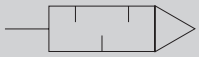

RoHS CAD

Specifications

Item	SL-8A-W	SL-10A-W	SL-15A-W
Working fluid	Compressed air		
Max. working pressure MPa	0.9		
Min. working pressure MPa	0		
Proof pressure MPa	1.35		
Fluid temperature °C	5 to 60		
Ambient temperature °C	-10 to 60 (no freezing)		
Port size R	1/4	3/8	1/2
Weight g	75	100	105
Compatible cylinder tube size	ø50 to ø100	ø63 to ø140	ø75 to ø180
Noise reduction effect dB [A]	20 or more		
Flow rate *1 ℓ/min(ANR)	2400	3200	4100
Effective cross-sectional area mm^2	36	48	61

*1: Flow rate is the atmospheric pressure conversion value at pressure 0.5 MPa.

How to order

SL - 8A - W

● Replacement element

SL - 8A - EL

Ⓐ Port size	
8A	R 1/4
10A	R 3/8
15A	R 1/2

Dimensions/Internal structure and main parts list

● SL-8A to 15A-W

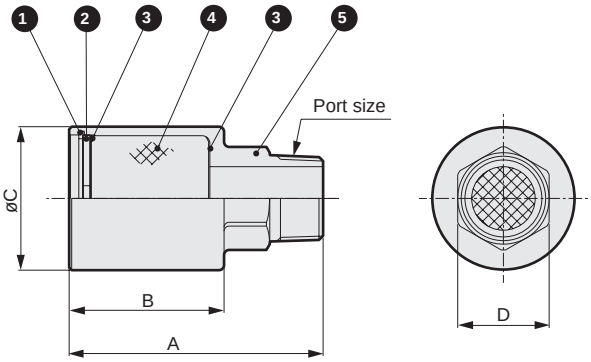

Model No.	Port size	A	B	øC	D
SL-8A-W	R 1/4	64	41	30	17
SL-10A-W	R 3/8	74.5	49.5	36	24
SL-15A-W	R 1/2	77.5	49.5	36	24

Part No.	Part name	Material
1	C-snap ring	Stainless steel
2	Perforated metal	Stainless steel
3	Wire mesh	Stainless steel
4	Element	Vinylidene chloride
5	Body	Aluminum

⚠Precautions for use

■ Design/selection

⚠ WARNING

● This product is for industrial use. Do not use for medical purposes, or in any equipment or circuit that concerns human life.

■ Working environment

● This product has outdoor specifications, but should not be used in the following environments.

- When the ambient temperature and product temperature exceed the range of -10 to 60°C.
  (The product temperature is at risk of exceeding the ambient temperature when exposed to direct sunlight.)
- When air freezes.
- In atmospheres containing corrosive gases, liquids and chemicals.
- Locations with vibration or impact.

■ Use/maintenance

⚠ WARNING

● Do not install the exhaust outlet of the silencer facing upward. Also, implement measures to prevent foreign matter, dust, and rainwater from entering the exhaust outlet.

⚠ CAUTION

● Tighten pipes with the appropriate torque.

(Recommended tightening torque)

Port thread	Tightening torque N·m
R1/4	6 to 8
R3/8	13 to 15
R1/2	16 to 18

● Silencing values are based on JIS standards. Silencing could vary with the type of circuit and pressure used.

● Use only compressed air. Air containing corrosive gases, fluids, or chemicals could result in body damage or rubber deterioration.

● This product guarantees outdoor use, but not corrosion resistance (no rust or discoloration).

⚠ CAUTION

● Do not apply a load to the product unless it is within the parameters of use. (Do not climb/step onto the product.)

● Check that the C-snap ring of the silencer does not pop off when removed or attached.

● Assemble the C-snap ring of the silencer accurately when replacing the element. Parts used inside could pop out and cause problems if assembly is not complete.

● Depending on the working status, the element could clog and reduce exhaust in the silencer. Service, clean, and replace the element of the product regularly.

MEMO

Pneumatic components (silencer)

Safety Precautions

Be sure to read this section before use.
Refer to Intro Page 63 for general precautions regarding pneumatic components and refer to "⚠ Safety precautions" for detailed precautions for individual series.

Design/selection

⚠CAUTION

■ Use the product in the range of conditions specified for the product. Consult with CKD when using the product for special applications.
- The exhaust port could become plugged if the silencer is clogged.
  Design safely to prevent the system from malfunctioning.
- Use of the product exceeding the specifications range may result in insufficient performance, and its safety cannot be guaranteed.
- This product may not be usable in special applications and environments.
  For example, use for applications requiring safety, including nuclear energy, railways, aircraft, vehicles, medical devices, devices in contact with beverages or foodstuffs, amusement devices, emergency cutoff circuits, press machines, brake circuits, or safety devices or applications.

■ Confirm before use that the product will withstand the working environment.
- Cannot be used in environments where its functions will be impeded.
  Such environments include high temperatures, chemical atmospheres, where chemical liquids, vibration, moisture, water dripping, or gas is present; or where ozone is generated.

Mounting, installation and adjustment

Piping

⚠CAUTION

■ When connecting pipes, wrap sealing tape in the opposite direction to the threading, from the inside position to within 2 mm from the pipe end.
- If sealing tape protrudes from the pipe threads, it could be cut when screwing the bolts in. This could cause the tape to enter the pneumatic components, causing failures.

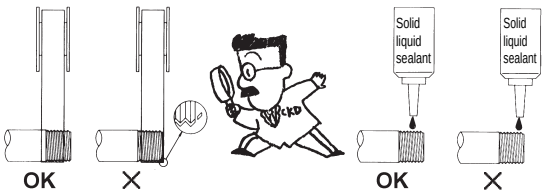

■ Use appropriate torque to tighten the pipes when connecting them.
- The purpose is to prevent air leakage and damage to bolts.
- Refer to the corresponding section for the appropriate torque for the series.

■ Install the silencer so that exhaust air does not blow directly into eyes.

■ Do not apply lateral load to the body during or after installation.

■ Secure space around the silencer for installation and removal.

■ Handling push-in fittings and tubes
- Refer to fitting and tube warnings and cautions (pages 910 to 913) for handling push-in fittings and tubes.

MEMO

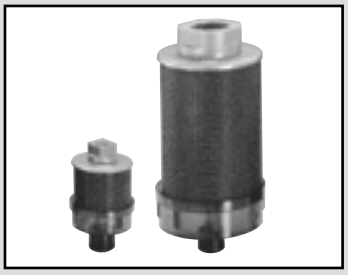

Exhaust cleaner

FA Series

Exhaust noise and oil mist have been minimized.

● Port size: Rc3/8 to Rc2

JIS symbol

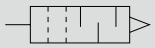

RoHS CAD

Specifications

Item	FA331-10A	FA431-15A	FA531-20A	FA631-25A	FA731-40A	FA831-50A
Port size Rc	3/8	1/2	3/4	1	1 1/2	2
Effective cross-sectional area mm²	16	33	55	165	330	550
Max. processing flow rate m³/min(ANR)	0.3	0.6	1	3	6	10
Fluid temperature	5 (41°F) to 65 (149°F)°C (no freezing)					
Ambient temperature	0 (32°F) to 65 (149°F)°C (no freezing)					
Noise reduction effect	35 dB and over (at the max. processing flow rate in oil saturated state)					
Oil mist collection efficiency	99.9% and over					
Oil storage capacity cm³	80	130	150	250	350	550
Weight kg	0.2	0.3	0.4	0.6	1.1	1.5
Bracket No. (option)	B351-10A	B451-15A	B551-20A	B651-25A	-	-

Flow characteristics

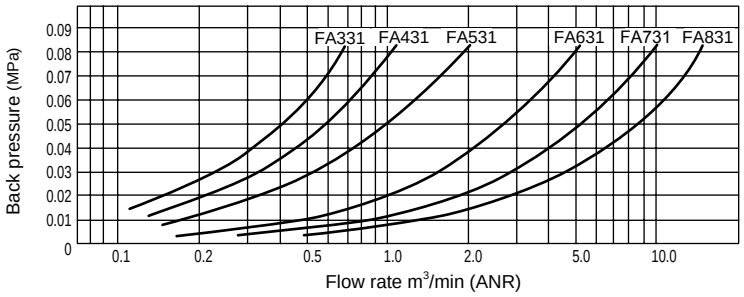

Selection guide

Select an exhaust cleaner based on the air consumption in the circuit being used.

(1) Calculate the air consumption for the actuator being used.

(2) Multiply the calculated air consumption by 1.4.

(3) Select a model that has a processing flow rate exceeding the air consumption multiplied by 1.4.

The figure below shows the air consumption when multiplied by 1.4 for each air cylinder size. Use this graph to select a model.

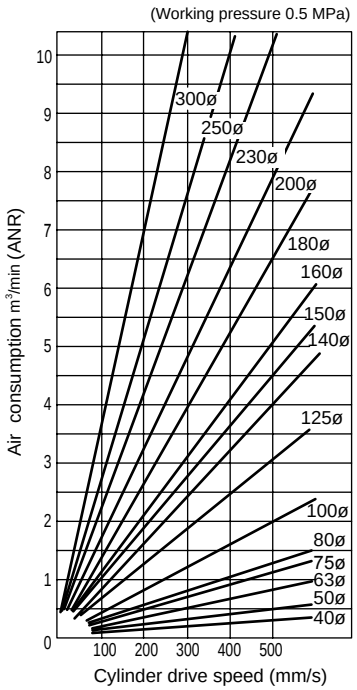

How to order

FA 3 31 - 10A - B

- FA: Exhaust cleaner
- 3: Ⓐ Series code
- 31: Ⓑ Port size *1
- 10A: Ⓑ Port size *1
- B: Ⓒ Option *2

Code	Description
Ⓐ Series code	
3	Compact
4	Standard
5	Large
6	Large
7	Large bore size
8	Large bore size

Ⓑ Port size	Series	3	4	5	6	7	8
10A	Rc3/8	●					
15A	Rc1/2		●				
20A	Rc3/4			●			
25A	Rc1				●		
40A	Rc1 1/2					●	
50A	Rc2						●

Ⓒ Option							
Blank	Not included	●	●	●	●	●	●
B	Bracket	●	●	●	●		

Precautions for model No. selection

*1: If port size NPT thread is required, do not indicate nominal size A. (Example) FA431-15

*2: Bracket option is not available for FA731 and FA831.

Internal structure and parts list

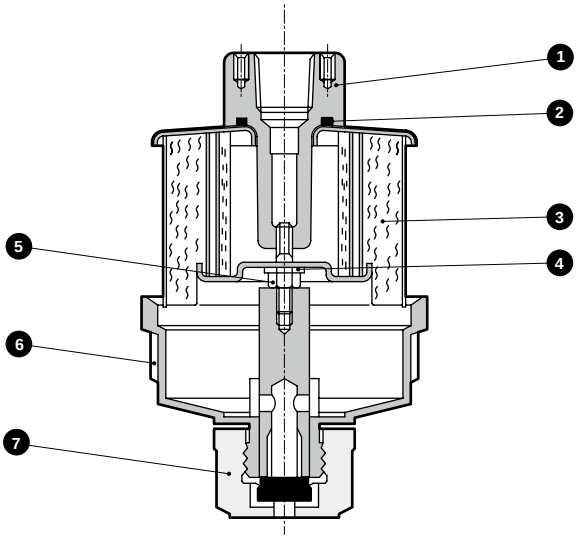

No.	Part name	Material					
		FA331	FA431	FA531	FA631	FA731	FA831
1	Adaptor assembly	Aluminum alloy die-casting, steel				Aluminum alloy casting, steel	
2	O-ring	Nitrile rubber					
3	Element assembly	Aluminum alloy, steel, glass fiber					
4	Gasket	Polyacetal resin					
5	Nut	Steel					
6	Case assembly	Polycarbonate resin, aluminum alloy					
7	Drain cock assembly	Nitrile rubber, polyamide resin					

Dimensions

CAD

● FA331 to FA631

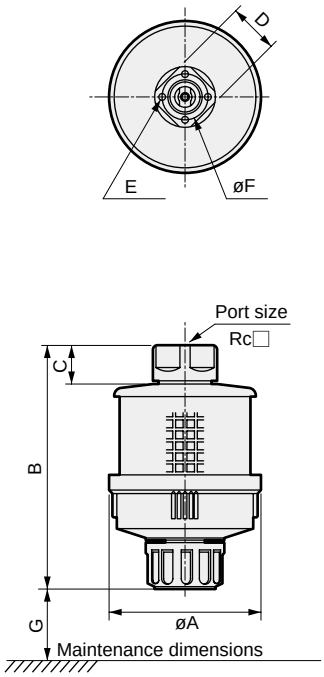

● FA731 to FA831

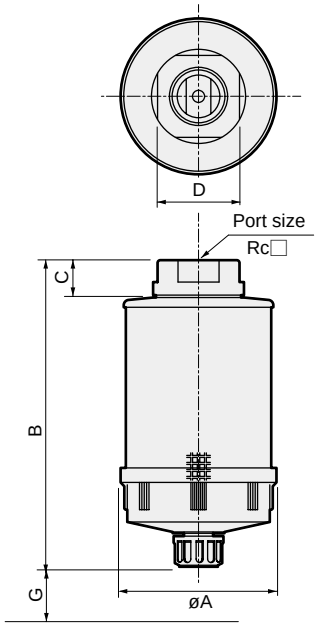

● Bracket (option)

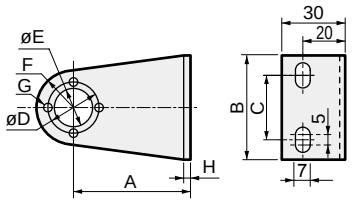

Note) Four screws for mounting the body are attached.

Model No.	A	B	C	D	E	F	G	H	Wt. kg
B351-10A	55	50	30	24	ø18	R16.5	4-ø3.5	2.3t	0.07
B451-15A	60	60	40	32	ø23	R20	4-ø4.5	2.3t	0.09
B551-20A	70	70	40	40	ø29	R25.4	4-ø4.5	3.2t	0.16
B651-25A	80	70	40	48	ø37	R27.5	4-ø4.5	3.2t	0.18

Common piping method

When many valves are used in one place, common piping method is recommended.

- Easy maintenance control
- Low cost

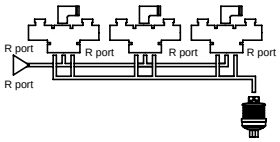

Model No.	FA331	FA431	FA531	FA631	FA731	FA831
A	80	90	100	112	132	150
B	129	147	171	201	258	311
C	20	23	25	28	32	36
D	27	32	41	46	70	80
E	4−M3 (depth 7)	4−M4 (depth 8)	4−M4 (depth 8)	4−M4 (depth 10)	-	-
F	24	32	40	48	-	-
G	80	100	100	100	200	250
Port size	Rc3/8	Rc1/2	Rc3/4	Rc1	Rc1 1/2	Rc2

Safety precautions

1. Drain the oil accumulated inside the case by opening the drain cock before the oil level reaches the element.
2. To connect a drain tube to the case, follow the following steps.
   (1) Remove the drain cock.
   (2) Screw in the R 1/8 male half union and connect the resin tube.
   (3) Hold the adaptor assembly and screw in, taking care not to apply load to the case.
   (4) If the back pressure increases to 0.1 MPa or more, replace the element assembly.

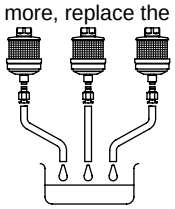

Exhaust cleaner optional parts diagram

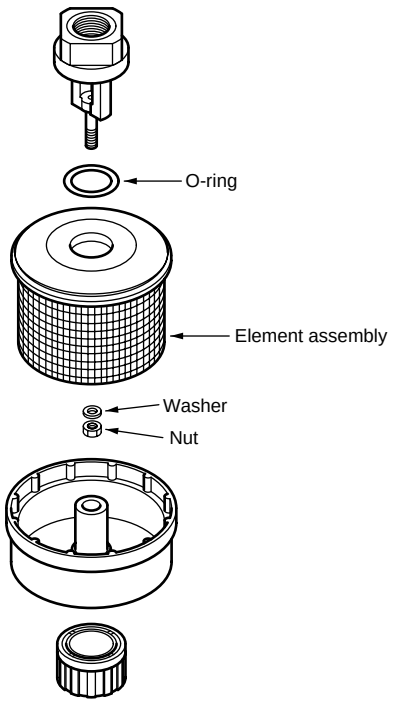

Element kit

(Element assembly, O-ring, washer and nut set)

Model	Element kit model No.
FA331-10A	FA331-ELEMENT
FA431-15A	FA431-ELEMENT
FA531-20A	FA531-ELEMENT
FA631-25A	FA631-ELEMENT
FA731-40A	FA731-ELEMENT
FA831-50A	FA831-ELEMENT

Auxiliary valve

(Check valve/others)

■ **Pneumatic auxiliary components**



CONTENTS

Series variation	782
● Quick exhaust valve with push-in fitting (QEL)	786
● Quick exhaust valve (QEV2)	790
● Shuttle valve (SHV2)	794
● Compact check valve with push-in fitting (CHL)	798
● Check valve (CHV2)	800
● Block valve (FPV)	802
● Threshold sensor (PWS)	806
⚠ Safety precautions	810

Series variation

Auxiliary valve

● Quick exhaust and circuit switching valves, etc., are available.

Model	Product appearance	Model No.	Port size (R or Rc)											Page
			M5	ø4	ø6	1/8	1/4	3/8	1/2	3/4	1	1¼	1½	
Quick exhaust valve with push-in fitting	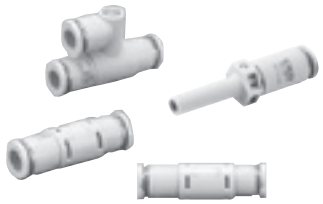	QEL-H44		●										786
		QEL-44P												
		QEL-H66			●									
		QEL-66P												
Quick exhaust valve		QEV2-6				●								790
		QEV2-8					●							
		QEV2-10						●						
		QEV2-15							●					
		QEV2-20								●				
		QEV2-25									●			
Shuttle valve		SHV2-6				●								794
		SHV2-8					●							
		SHV2-10						●						
		SHV2-15							●					
		SHV2-20								●				
		SHV2-25									●			
Compact check valve with push-in fitting		CHL-M54	●											798
		CHL-H44		●										
		CHL-H66			●									
Check valve		CHV2-6				●								800
		CHV2-8-J					●							
		CHV2-8					●							
		CHV2-10-J						●						
		CHV2-10						●						
		CHV2-15							●					
		CHV2-20								●				
		CHV2-25									●			
		CHV2-32										●		
		CHV2-40											●	
Block valve		FPV-M5	●											802
		FPV-6A				●								
		FPV-8A					●							
		FPV-10A						●						
		FPV-15A							●					
Threshold sensor		PWS-B155	●											806
		PWS-B1882				●								
		PWS-B1992					●							
		PWS-B1332						●						
		PWS-B1222							●					

MEMO

Rapidly eliminates causes of

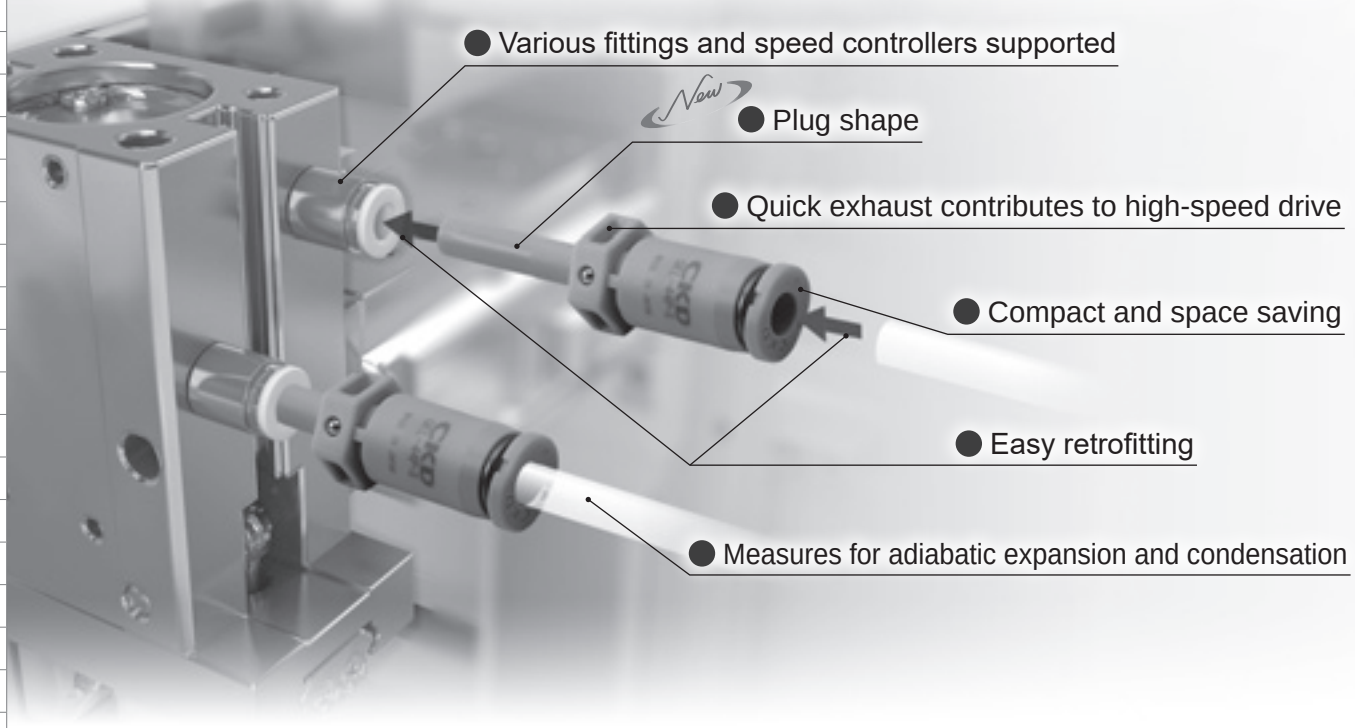

- Various fittings and speed controllers supported
- New Plug shape
- Quick exhaust contributes to high-speed drive
- Compact and space saving
- Easy retrofitting
- Measures for adiabatic expansion and condensation

Condensation generation mechanism

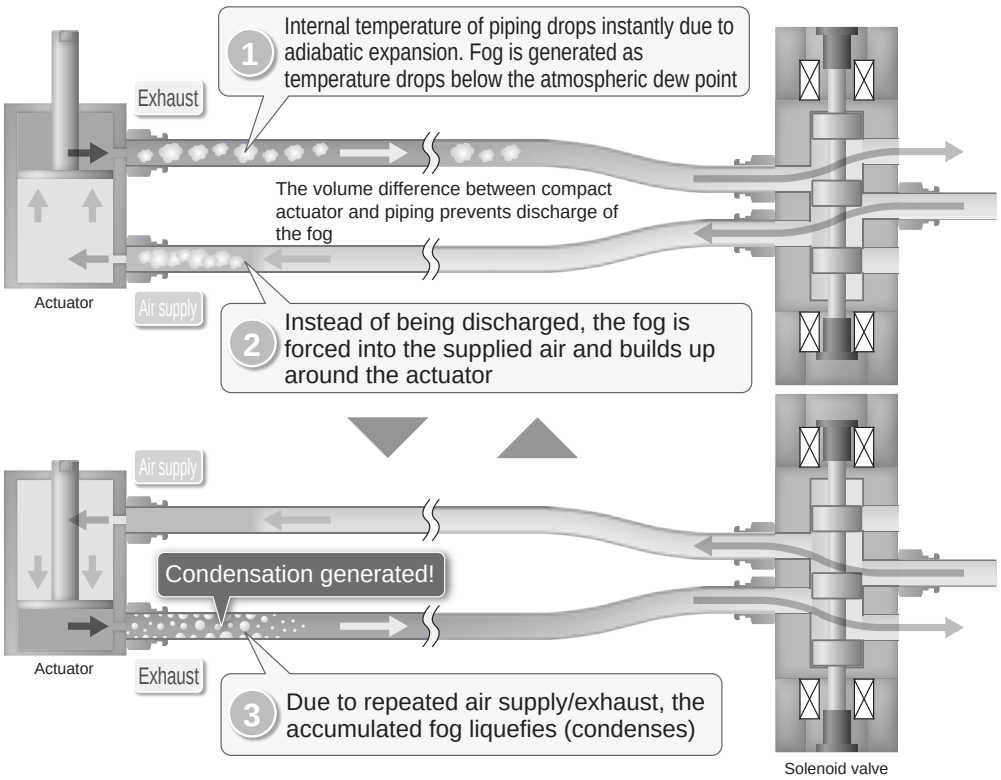

Condensation due to adiabatic expansion leads to the following issues.

Rust **Grease deterioration** **Malfunction** **Shortened service life**

condensation

Quick exhaust valve with push-in fitting

QEL SERIES

Easy retrofitting

The plug shape allows easy mounting near the actuator.
The elegant design helps save space.

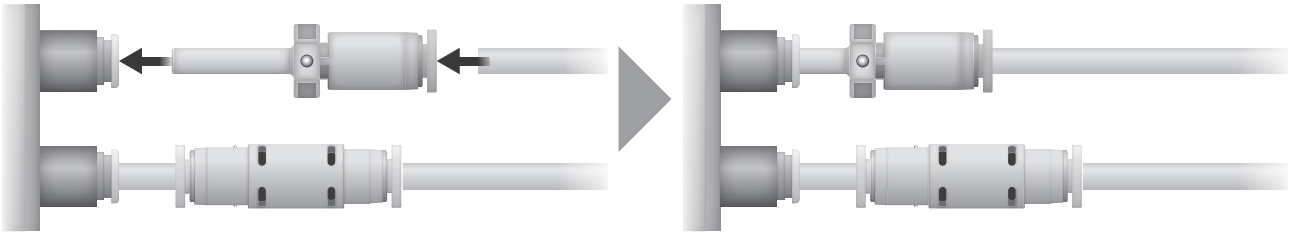

Usage examples

Condensation countermeasures

Before Condensation is generated due to repeated adiabatic expansion

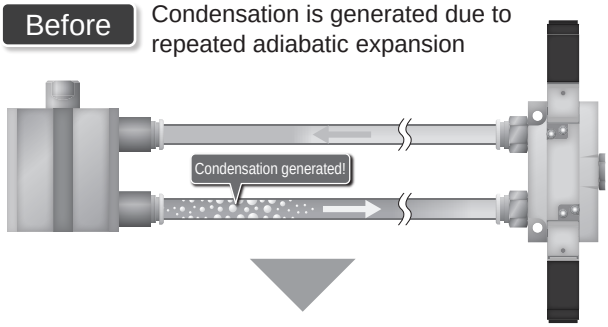

After **Installed near the cylinder, it discharges the air in the cylinder directly to atmosphere**

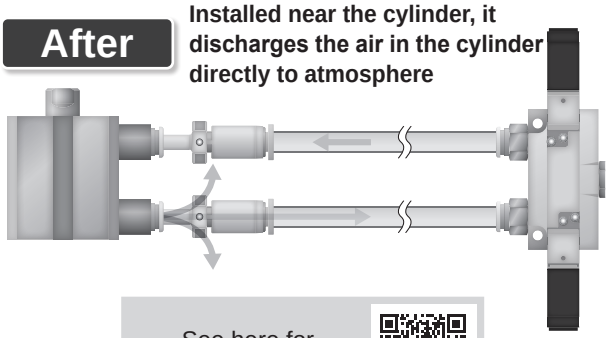

See here for details.

High-speed drive

Before With large piping volumes, air exhaust takes time

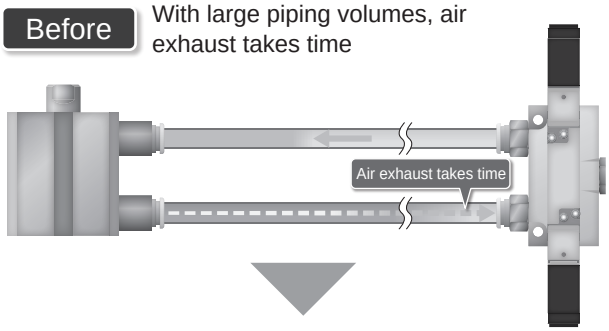

After **Quick exhaust enables high-speed cylinder drive**

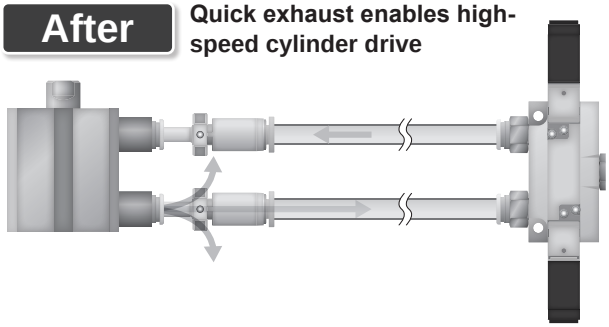

Introducing the QEL Series

Model variations		Features	Model No.	Compatible tube O.D.		Option	
				ø4	ø6	With exhaust port fitting	Atmosphere release
Plug		● Compact ● Assembly is easy even when retrofitted ● No replacement of existing piping materials	QEL-44P	●			●
			QEL-66P		●		●
Inline		● Easy assembly is possible midway through tubes ● Type with exhaust port fitting is available	QEL-H44	●		●	●
			QEL-H66		●	●	●

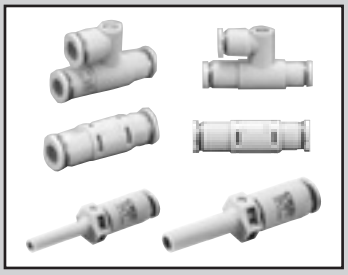

Quick exhaust valve with push-in fitting

QEL Series

● Piping bore size: ø4, ø6

JIS symbol

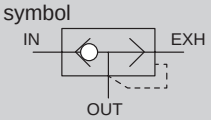

RoHS CAD

Features

● Compact, space saving
Inline has ø4/ø6 push-in fittings built in
Atmosphere release type and type with exhaust port fitting are available
Plugs can be attached directly to the actuator as an effective countermeasure for condensation due to adiabatic expansion

● Ozone resistant materials as standard
Ozone-proof materials for degradation prevention are used as standard for the valve

● Ecological products
All substances which adversely affect the global environment have been eliminated from the materials
RoHS2 Directive compliant product

Specifications

1 MPa ≈ 145.0 psi, 1 MPa = 10 bar

Model No. / Item			QEL-H44	QEL-H44-S	QEL-44P-S	QEL-H66	QEL-H66-S	QEL-66P-S
Working fluid			Compressed air					
Max. working pressure		MPa	0.7 (≈101 psi, 7 bar)					
Min. working pressure		MPa	0.1 (≈15 psi, 1 bar)					
Min. working pressure		MPa	0.05 (≈8 psi, 1 bar)					
Proof pressure (at room temperature)		MPa	1.35 (≈195 psi, 13 bar)					
Operating temperature		°C	5 (41°F) to 60 (140°F) (no freezing)					
Port size	IN		ø4	ø4	ø4	ø6	ø6	ø6
	OUT		ø4	ø4	ø4 plug	ø6	ø6	ø6 plug
	EXH		ø4	Atmospheric release	Atmospheric release	ø6	Atmospheric release	Atmospheric release
Product weight		g	5.2	3.3	2.3	7.6	4.9	3.9
Mounting orientation			Unrestricted					
Effective cross-sectional area	IN→OUT	mm^2	1.8		1.5	4		3
	OUT→EXH	mm^2	1.8		1.5	4		3

How to order

QEL - H44 - S

Model No.

Ⓐ Port size

Ⓑ Option

Code	Description
Ⓐ Port size	
H44	ø4
H66	ø6
44P	ø4 plug
66P	ø6 plug
Ⓑ Option	
Blank	With exhaust port fitting
S	Atmosphere release

*1: When A is "44P" or "66P", B "Blank" cannot be selected.

Internal structure and parts list

● Atmosphere release

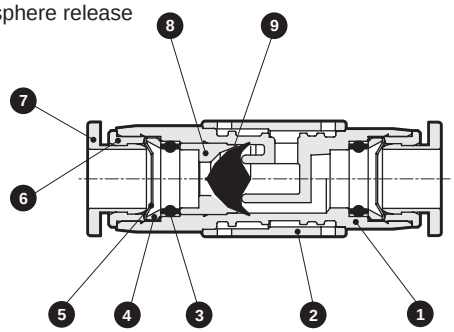

No.	Part name	Material
1	Resin body	Polybutylene terephthalate
2	Exhaust cover	Polybutylene terephthalate
3	Elastic sleeve	Nitrile rubber
4	Lock ring	Copper alloy (with electroless nickeling)
5	Lock claw	Stainless steel
6	Guide ring	Copper alloy (with electroless nickeling)
7	Release ring	Acetal resin
8	Valving element stopper	Copper alloy (with electroless nickeling)
9	Valving element	Hydrogenated nitrile rubber

● Type with exhaust port fitting

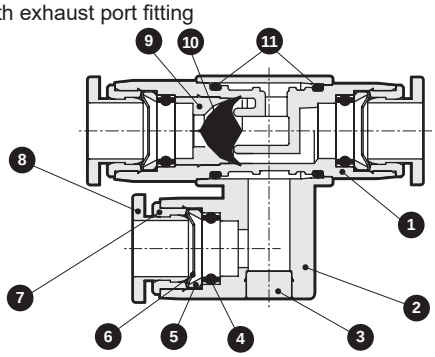

No.	Part name	Material
1	Resin body	Polybutylene terephthalate
2	Exhaust fitting body	Polybutylene terephthalate
3	Plug	Copper alloy (with electroless nickeling)
4	Elastic sleeve	Nitrile rubber
5	Lock ring	Copper alloy (with electroless nickeling)
6	Lock claw	Stainless steel
7	Guide ring	Copper alloy (with electroless nickeling)
8	Release ring	Acetal resin
9	Valving element stopper	Copper alloy (with electroless nickeling)
10	Valving element	Hydrogenated nitrile rubber
11	O-ring	Nitrile rubber

● Plug

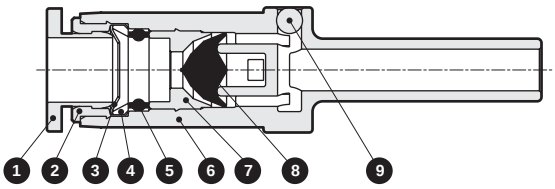

No.	Part name	Material
1	Release ring	Acetal resin
2	Guide ring	Copper alloy (with electroless nickeling)
3	Lock claw	Stainless steel
4	Lock ring	Copper alloy (with electroless nickeling)
5	Elastic sleeve	Nitrile rubber
6	Resin body	Polybutylene terephthalate
7	Valve body holder	Aluminum
8	Valving element	Hydrogenated nitrile rubber
9	Steel ball	Stainless steel

Dimensions

● Atmosphere release

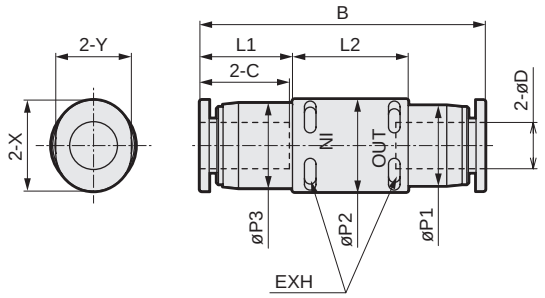

● With exhaust port fitting

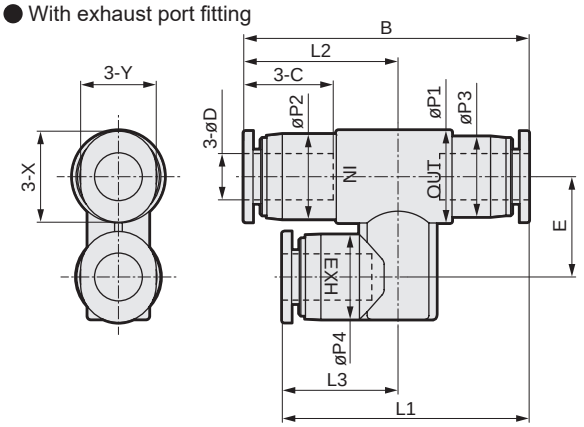

Code / Model No.	øD Compatible tube O.D.	B	L1	L2	L3	øP1	øP2	øP3	øP4	C	E	X	Y
QEL-H44	ø4	35.2	30.5	18.8	14.1	10	9	8.4	9	11.3	11	9.8	7.8
QEL-H66	ø6	37.4	32.4	20.2	15.2	12	11	10.4	11	11.8	13	11.8	9.8
QEL-H44-S	ø4	35.2	11.3	15	–	8.4	10	9	–	11.3	–	9.8	7.8
QEL-H66-S	ø6	37.4	12.2	15	–	10.4	12	11	–	11.8	–	11.8	9.8

● Plug

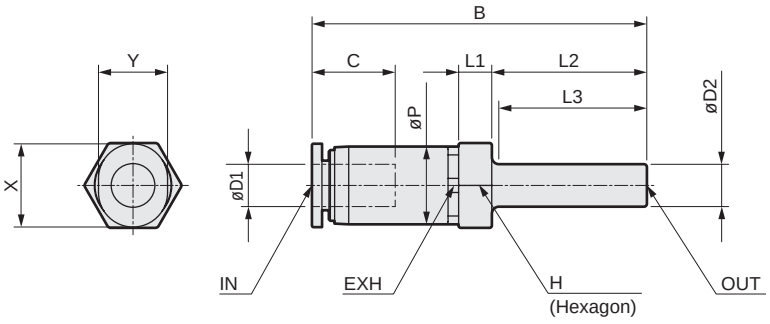

Code / Model No.	øD1 Compatible tube O.D.	øD2 Fitting port size	B	L1	L2	L3	øP	C	H (Hexagon)	X	Y
QEL-44P-S	ø4	ø4	41.3	4.1	19	18.2	9	11.3	10	9.8	7.8
QEL-66P-S	ø6	ø6	47.5	4.7	22	21	11	11.8	12	11.8	9.8

Safety precautions

- Always use within the product specifications.
- This product is used with compressed air. Do not use this unit with other fluids.
- Securely insert the tube completely to the end, and make sure that the tube cannot be pulled out.
- Always provide differential pressure when using as a shuttle valve. The product could malfunction if there is no differential pressure.
- Securely insert the plug, and check that the plug section is not dislocated. If the plug is not fully inserted, it could be dislocated or air could leak.
- Make sure that there is no torsion, tension or moment load applied to the inserted state.
- Do not apply tension to the piping tubes, etc.
- Stop air flow and confirm that there is no residual pressure before replacing the tube.

MEMO

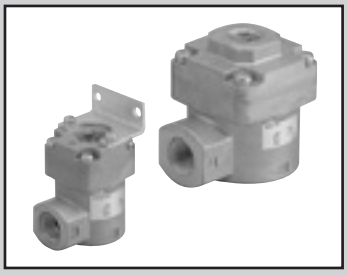

Quick exhaust valve

QEV2 Series

● Port size: Rc1/8 to Rc1

JIS symbol

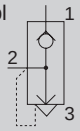

RoHS CAD

Features

● Large flow rate design realizing outstanding exhaust

● Variety of bore sizes available

Series includes piping bore sizes Rc1/8 to Rc1.

● Wide range of options

· Fluoro rubber specifications available as options
· Mounting bracket available (small bore)

● Eco-friendly product

· Eco-friendly design is free of lead and hexavalent chrome
· Paint-free
· Waste sorting is simplified

Specifications

Model No. / Item		QEV2-6	QEV2-8	QEV2-10	QEV2-15	QEV2-20	QEV2-25
Working fluid		Compressed air					
Max. working pressure MPa		1.0 (≈150 psi, 10 bar)					
Min. working pressure MPa		0.05 (≈7.3 psi, 0.5 bar)					
Proof pressure MPa		1.5 (≈220 psi, 15 bar)					
Fluid temperature °C		5 (41°F) to 60 (140°F)					
Ambient temperature °C		0 (32°F) to 60 (140°F) (no freezing)					
Port size	1, 2	1/8	1/4	3/8	1/2	3/4	1
Rc	3	1/4	1/4	1/2	1/2	1	1
Weight g		80	78	250	250	710	660
Mounting bracket weight g		15		-			
Mounting orientation		Unrestricted					
Eff. X-sectional area mm^2	1→2	25	35	90	105	205	275
	2→3	30	40	100	115	280	330

Operational explanation

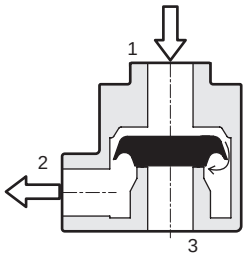

● 1→2
The valve closes port 3 with pressure from port 1. Air passes around the valve and flows to port 2.

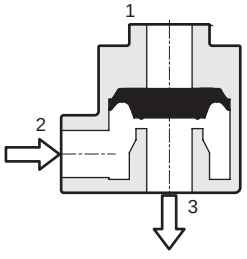

● 2→3
When port 1 pressure drops, the valve closes port 1, opens port 3 and exhausts port 2 air.

Applications

(1) Use to increase exhaust speed of air cylinder.

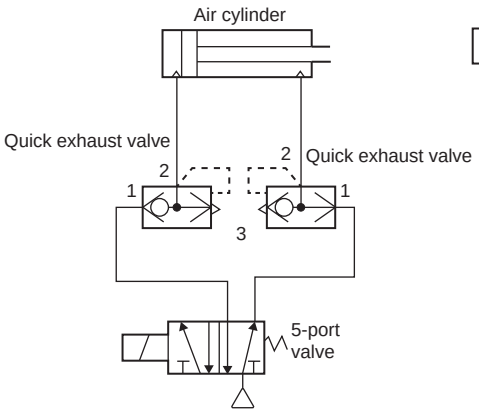

(2) Use to increase exhaust speed of clutch (or brake)

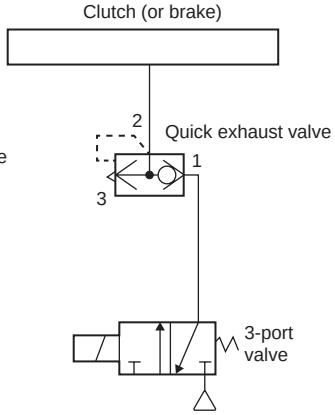

How to order

● Quick exhaust valve

QEV2 - 6 - A P

Model No.

Ⓐ Port size

Ⓑ Option

Ⓒ Accessory

Code	Description
Ⓐ Port size	
6	Rc 1/8
8	Rc 1/4
10	Rc 3/8
15	Rc 1/2
20	Rc 3/4
25	Rc 1
Ⓑ Option	
Blank	No option
A	Fluoro rubber specifications
Ⓒ Accessory	
Blank	None
P	Mounting bracket attached

*1: Mounting bracket is available for QEV2-6 and QEV2-8 only.

Internal structure and parts list

● QEV2-6/8

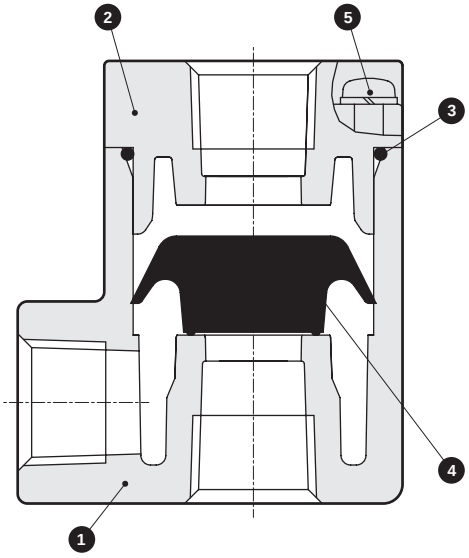

● QEV2-10/15/20/25

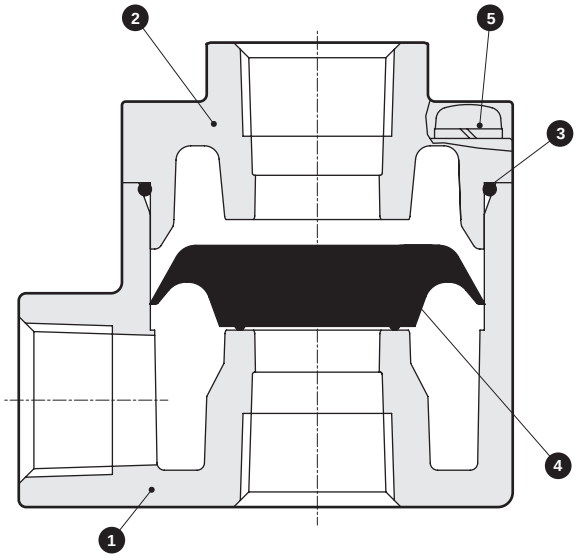

No.	Part name	Material
1	Body	Aluminum die-casting
2	Plug	Aluminum die-casting
3	O-ring	Nitrile rubber (fluoro rubber)
4	Valve	Hydrogenated nitrile rubber (fluoro rubber)
5	Cross-recessed pan head machine screw with switch	Stainless steel

* Materials shown in ( ) are for option “A” (fluoro rubber specifications).

Dimensions CAD

● QEV2-6/8

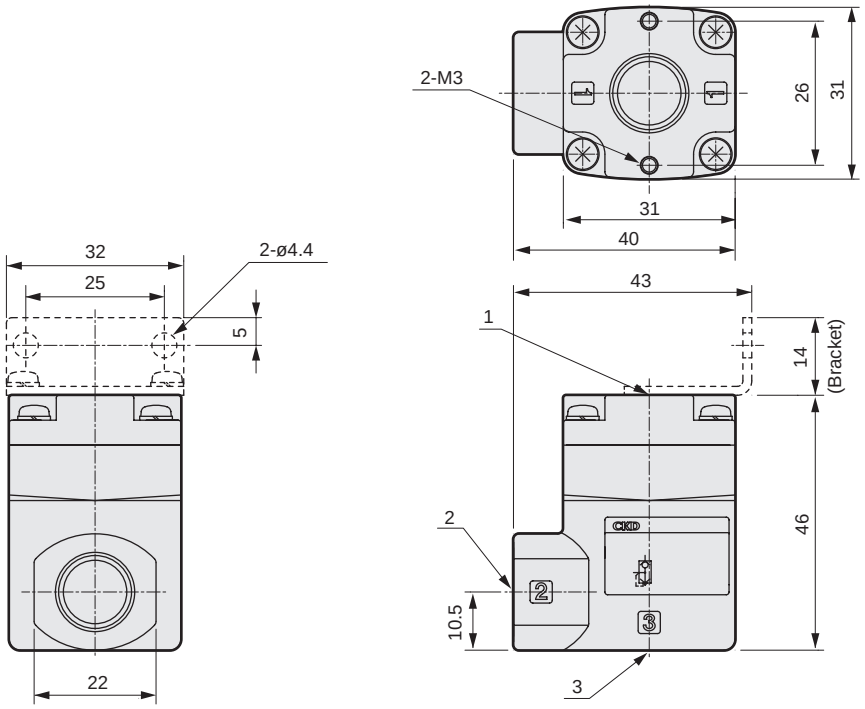

Model No.	Port position		
	1	2	3
QEV2-6	Rc 1/8		Rc 1/4
QEV2-8	Rc 1/4		

[Piping port indication]

Port code	Description
1	IN (Input)
2	OUT (Output)
3	EXH (Exhaust)

● QEV2-10/15

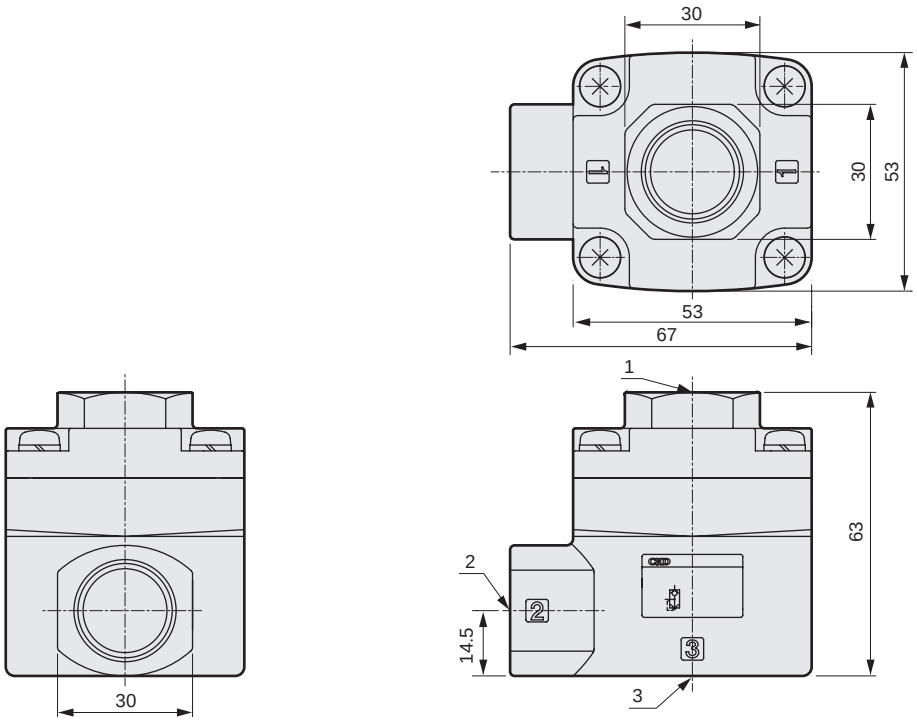

Model No.	Port position		
	1	2	3
QEV2-10	Rc 3/8		Rc 1/2
QEV2-15	Rc 1/2		

[Piping port indication]

Port code	Description
1	IN (Input)
2	OUT (Output)
3	EXH (Exhaust)

Dimensions

● QEV2-20/25

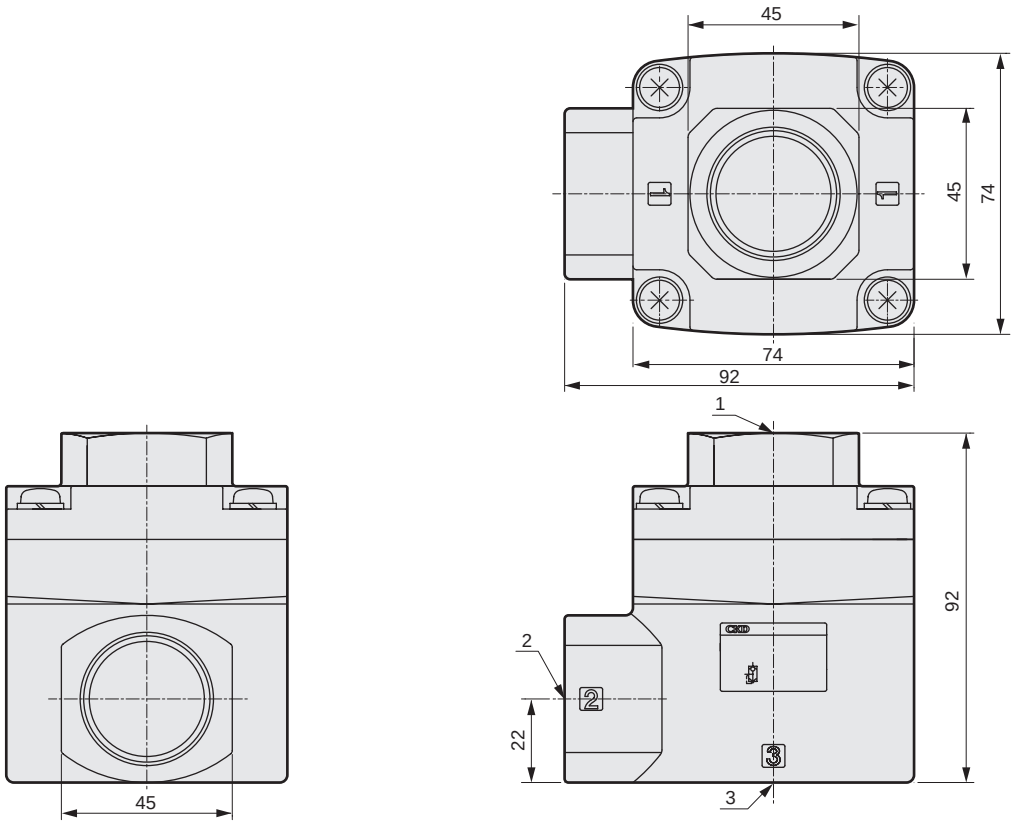

Model No.	Port position		
	1	2	3
QEV2-20	Rc 3/4		Rc 1
QEV2-25	Rc 1		

[Piping port indication]

Port code	Description
1	IN (Input)
2	OUT (Output)
3	EXH (Exhaust)

⚠Safety precautions

■ Design/selection

- This valve cannot be used as a stop valve that requires no leakage. Slight leakage is allowed for in this product's specifications.
- In the following cases, vibration may cause malfunctions or abnormal noise.
  - · When (IN) port 1 piping is extremely narrow and long or when the directional switching valve's orifice is small, generating residual or back pressure on the port 1 side.
  - · When differential pressure of (IN) port 1 and (OUT) port 2 is lower than min. working pressure (0.05 MPa).
  - · When the 2 (OUT) port side piping diameter is extremely restricted.

■ Mounting, installation and adjustment

- Apply the recommended tightening torque when connecting pipes.
  - · The purpose is to prevent air leakage and damage to bolts.
  - · First, tighten the bolts by hand to ensure that the threads are not damaged, then use a tool.
  - · Do not tighten while pressure is applied.
- Install a pneumatic filter just before the pneumatic component in the circuit.

[Recommended tightening torque]

	Tightening torque N·m
Rc 1/8	3 to 5
Rc 1/4	6 to 8
Rc 3/8	13 to 15
Rc 1/2	16 to 18
Rc 3/4	19 to 40
Rc 1	41 to 70

■ Use/maintenance

- Stop air flow and confirm that there is no residual pressure before replacing the tube.

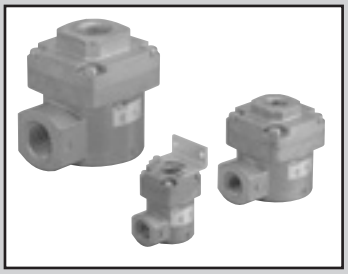

Shuttle valve

SHV2 Series

● Port size: Rc1/8 to Rc1

JIS symbol

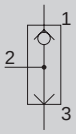

RoHS CAD

Features

● Variety of bore sizes available

Series includes piping bore sizes Rc1/8 to Rc1.

● Wide range of options

· Fluoro rubber specifications available as options
· Mounting bracket available (small bore)

● Eco-friendly product

· Eco-friendly design is free of lead and hexavalent chrome
· Paint-free
· Waste sorting is simplified

Specifications

Model No. / Item		SHV2-6	SHV2-8	SHV2-10	SHV2-15	SHV2-20	SHV2-25
Working fluid		Compressed air					
Max. working pressure	MPa	1.0 (≈150 psi, 10 bar)					
Min. working pressure	MPa	0.05 (≈7.3 psi, 0.5 bar)					
Min. working differential pressure	MPa	0.05 (≈7.3 psi, 0.5 bar)					
Proof pressure	MPa	1.5 (≈220 psi, 15 bar)					
Fluid temperature	°C	5 (41°F) to 60 (140°F)					
Ambient temperature	°C	0 (32°F) to 60 (140°F) (no freezing)					
Port size	Rc	1/8	1/4	3/8	1/2	3/4	1
Weight	g	86	82	270	270	760	700
Mounting bracket weight	g	15		-			
Mounting orientation		Unrestricted					
Eff. X-sectional area	1→2 mm²	20	28	90	105	205	245
	3→2 mm²	22	32	95	115	210	250
Min. required flow rate *1	ℓ/min	20	30	100		150	

*1: The valve may not switch completely if the flow rate is less than this value.

Operational explanation

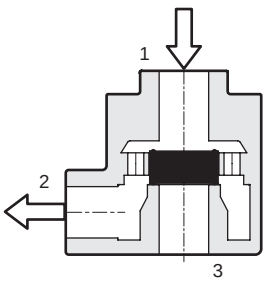

● 1→2
The valve closes port 3 with pressure from port 1. Air flows to port 2.

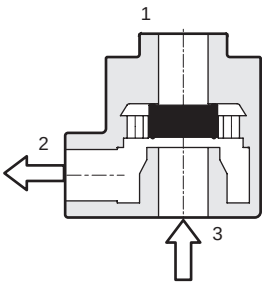

● 3→2
The valve closes port 1 with pressure from port 3. Air flows to port 2.

Applications

(1) Switching manual/auto

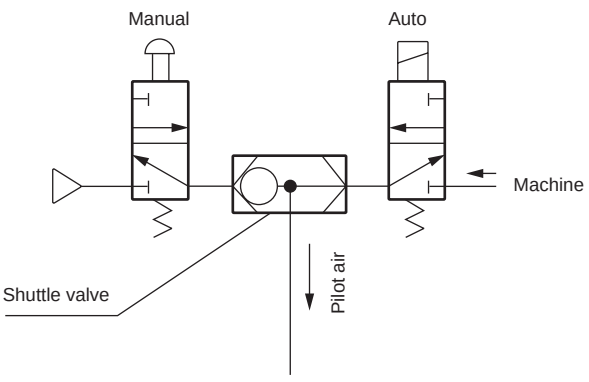

How to order

● Shuttle valve

SHV2 - 6 - A P

Model No.

Ⓐ Port size

Ⓑ Option

Ⓒ Accessory

Code	Description
Ⓐ Port size	
6	Rc 1/8
8	Rc 1/4
10	Rc 3/8
15	Rc 1/2
20	Rc 3/4
25	Rc 1
Ⓑ Option	
Blank	No option
A	Fluoro rubber specifications
Ⓒ Accessory	
Blank	None
P	Mounting bracket attached

*1: Mounting bracket is available for SHV2-6 and SHV2-8 only.

Internal structure and parts list

● SHV2-6/8

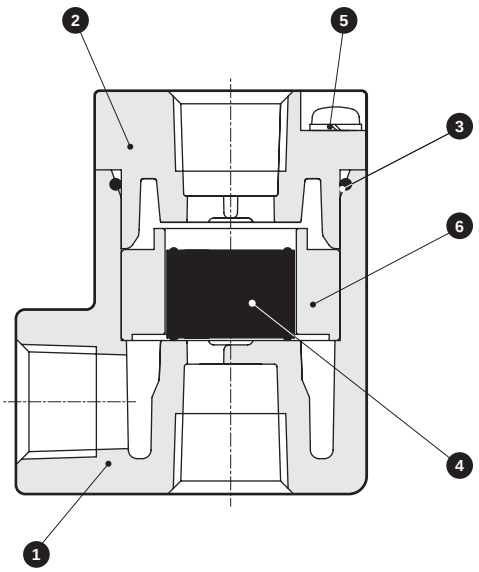

● SHV2-10/15/20/25

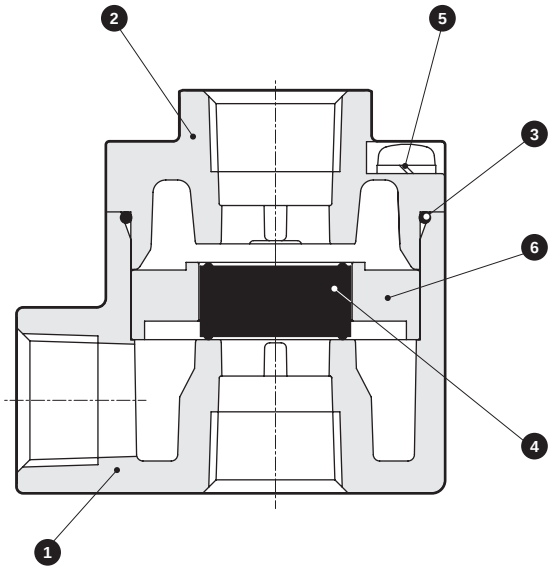

No.	Part name	Material
1	Body	Aluminum die-casting
2	Plug	Aluminum die-casting
3	O-ring	Nitrile rubber (fluoro rubber)
4	Valve	Nitrile rubber (fluoro rubber)
5	Cross-recessed pan head machine screw with switch	Stainless steel
6	Guide ring	Aluminum alloy

* Materials shown in ( ) are for option “A” (fluoro rubber specifications).

Dimensions CAD

● SHV2-6/8

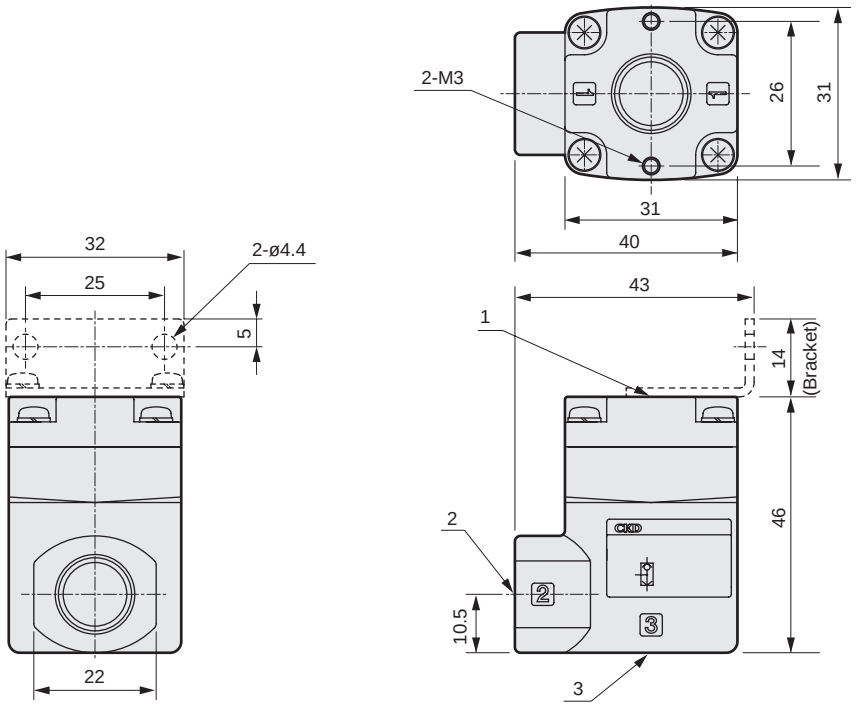

Model No.	Port position		
	1	2	3
SHV2-6	Rc 1/8		
SHV2-8	Rc 1/4		

[Piping port indication]

Port code	Description
1	A (Input)
2	OUT (Output)
3	B (Input)

● SHV2-10/15

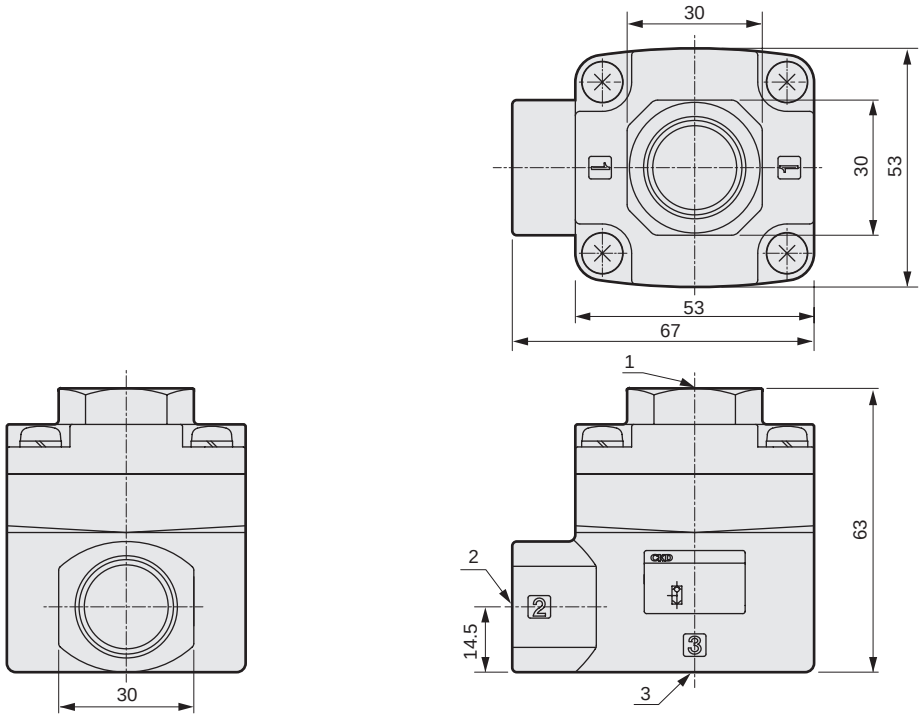

Model No.	Port position		
	1	2	3
SHV2-10	Rc 3/8		
SHV2-15	Rc 1/2		

[Piping port indication]

Port code	Description
1	A (Input)
2	OUT (Output)
3	B (Input)

Dimensions

● SHV2-20/25

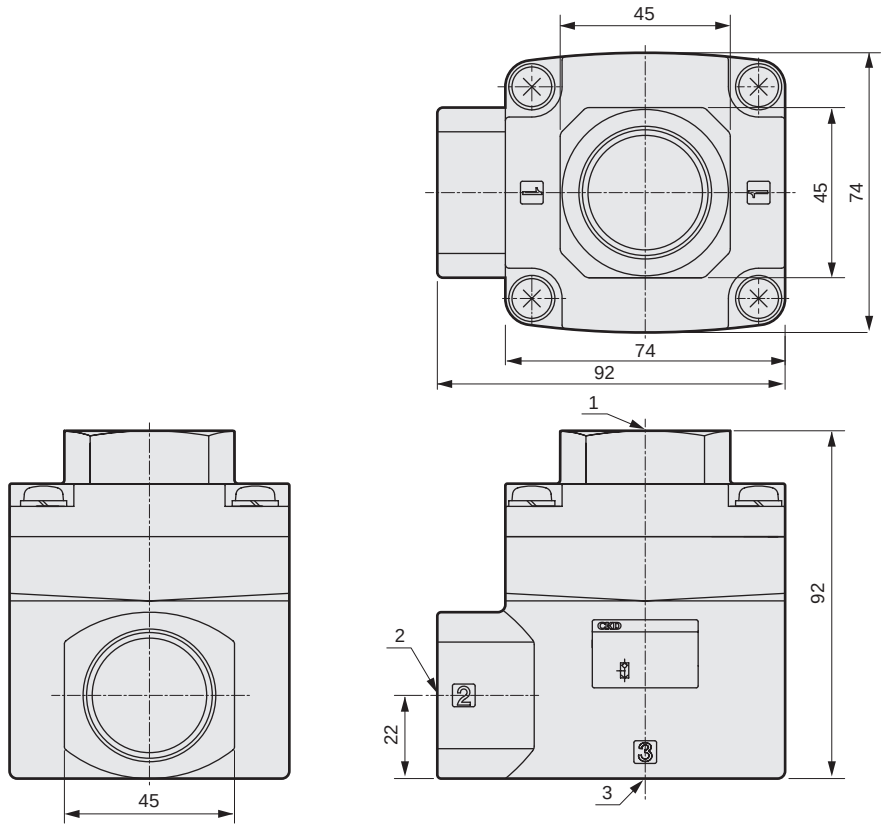

Model No.	Port position		
	1	2	3
SHV2-20	Rc 3/4		
SHV2-25	Rc 1		

[Piping port indication]

Port code	Description
1	A (Input)
2	OUT (Output)
3	B (Input)

⚠Safety precautions

■ Design/selection

- This valve cannot be used as a stop valve that requires no leakage. Slight leakage is allowed for in this product's specifications.
- While there is no orientation to the installation, if used in a range with little differential pressure (0.05 MPa or less), the movement could become sluggish.

■ Mounting, installation and adjustment

- Apply recommended tightening torque when connecting pipes.
  - · The purpose is to prevent air leakage and damage to bolts.
  - · First tighten the bolts by hand to ensure that the threads are not damaged, then use a tool.
  - · Do not tighten while pressure is applied.
- Install a pneumatic filter just before the pneumatic component in the circuit.

[Recommended tightening torque]

	Tightening torque N·m
Rc 1/8	3 to 5
Rc 1/4	6 to 8
Rc 3/8	13 to 15
Rc 1/2	16 to 18
Rc 3/4	19 to 40
Rc 1	41 to 70

■ Use/maintenance

- Stop air flow and confirm that there is no residual pressure before replacing the tube.



Compact check valve with push-in fitting

CHL Series

Compact/space saving inline. Vacuum retention and low pressure use are possible.

JIS symbol

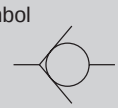

RoHS CAD

Specifications

Item	CHL-M54	CHL-H44	CHL-H66
Working fluid	Compressed air		
Max. working pressure MPa	1.0 (≈150 psi, 10 bar)		
Min. working pressure MPa	0.03 (≈4.4 psi, 0.3 bar)		
Cracking pressure MPa	0.03 (≈4.4 psi, 0.3 bar)		
Negative pressure range kPa	-30 (≈-4.3 psi, -0.3 bar) to -100 (≈-15 psi, -1 bar)		
Proof pressure MPa	1.5 (≈220 psi, 15 bar)		
Fluid temperature °C	0 (32°F) to 60 (140°F) (no freezing)		
Ambient temperature °C	0 (32°F) to 60 (140°F) (no freezing)		
Port size	M5	ø4	ø6
Weight g	8.9	10.8	16.6
Compatible tube O.D.	ø4	ø4	ø6
Flow rate ℓ/min(ANR)	170	180	440
Effective cross-sectional area mm^2	2.6	2.8	6.8

Note: Flow rate is the atmospheric pressure conversion value at pressure 0.5 MPa.

How to order

CHL – M5 4 – A

Model No. (A) (B) (C) M54 type only

Ⓐ Port size		Ⓑ Tube O.D.	
M5	M5	4	ø4
H4	ø4	4	ø4
H6	ø6	6	ø6

Ⓒ Free flow	
A	M5 screw side input
B	M5 screw side output

Note: Combinations other than those listed above are not possible.

Illustration of Ⓒ free flow (M54 type only)

Free flow A (M5 screw side input)

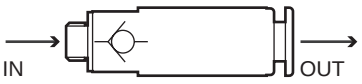

Free flow B (M5 screw side output)



Clean-room specifications (Catalog No. CB-033SA)

● Anti-dust generation structure for use in cleanrooms

CHL-.....- P7*

Internal structure and parts list

● CHL-M54

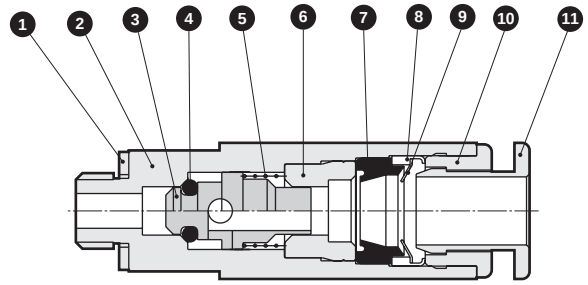

● CHL-H44,H66

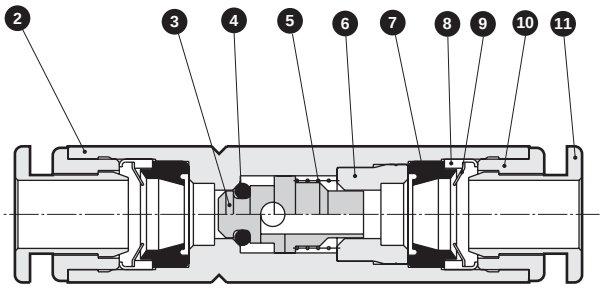

No.	Part name	Material
1	Gasket	Nitrile rubber/steel
2	Body	Copper alloy (electroless nickeling)
3	Valving element	Aluminum
4	O-ring	Nitrile rubber
5	Spring	Stainless steel

No.	Part name	Material
6	Valve seat	Aluminum
7	Packing	Nitrile rubber
8	Chuck holder	Copper alloy (electroless nickeling)
9	Chuck	Stainless steel
10	Outer ring	Copper alloy (electroless nickeling)
11	Push ring	Polybutylene terephthalate

Dimensions

● CHL-M54-*

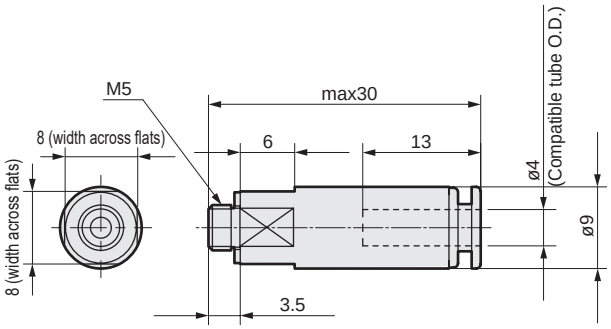

● CHL-H44

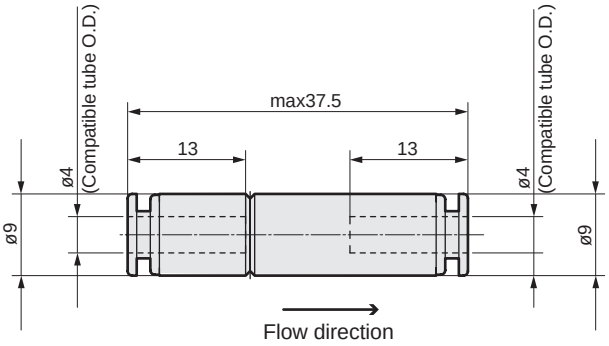

● CHL-H66

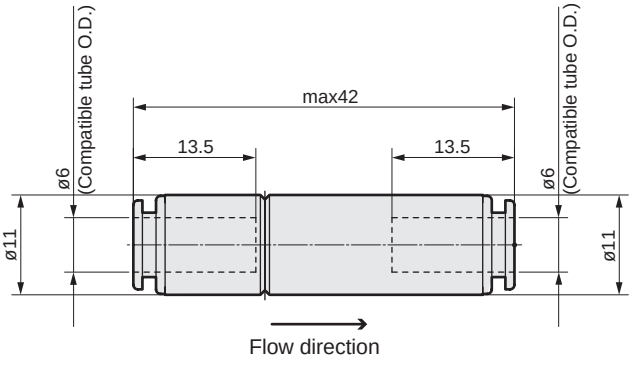



Check valve

CHV2 Series

Completely prevents reverse flow of fluid such as compressed air. Ten types of wide variations.

● Port size: Rc 1/8 to Rc1 1/2

JIS symbol



RoHS CAD

Features

● Wide range of variations
Series are available for piping bore sizes Rc1/8 to Rc1 1/2.
● Compact and lightweight
● Wide range of options
Fluoro rubber specifications and oil-prohibited specifications available as options. An installation bracket is available for small bore sizes.
● Neat shape
● Eco-friendly products, to make recycling easier

Specifications

Model No.	CHV2-6	CHV2-8-J	CHV2-8	CHV2-10-J	CHV2-10	CHV2-15	CHV2-20	CHV2-25	CHV2-32	CHV2-40
Working fluid	Compressed air									
Max. working pressure MPa	1 (≈150 psi, 10 bar)									
Min. working pressure MPa	0.03 (≈4.4 psi, 0.3 bar)									
Proof pressure MPa	1.5 (≈220 psi, 15 bar)									
Cracking pressure MPa	0.02 (≈2.9 psi, 0.2 bar)									
Fluid temperature °C	5 (41°F) to 60 (140°F)									
Ambient temperature °C	0 (32°F) to 60 (140°F) (no freezing)									
Port size Rc	1/8	1/4		3/8		1/2	3/4	1	1 1/4	1 1/2
Weight g	47		81		140		265		875	
Mounting plate weight g	10		15		-					
Effective cross-sectional area mm²	28		55	60	94	110	220	250	700	730

How to order

CHV2 - 8 - J - A P

- CHV2: Model No.
- 8: A Port size
- J: Compact small flow rate *1
- A: B Option *2
- P: C Accessory *3

Code	Description
A Port size	
6	Rc1/8
8	Rc1/4
10	Rc3/8
15	Rc1/2
20	Rc3/4
25	Rc1
32	Rc1 1/4
40	Rc1 1/2
B Option	
Blank	No option
A	Fluoro rubber specifications
P8	Oil-prohibited specifications
C Accessory	
Blank	None
P	With mounting plate

*1: Small flow compact (J) is only for port size Rc1/4 (8) and Rc3/8 (10).
*2: The options are listed in alphabetical order. (AP8)
*3: Mounting plate is available for CHV2-6, CHV2-8-J, CHV2-8 and CHV2-10-J only.

Operational principle

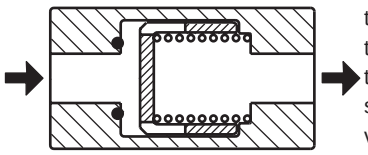

If pressurized in the direction of the arrow from left to right on the side body, the valve fully opens and the flow turns to free flow.

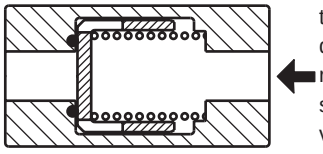

If pressurized in the reverse direction from right to left on the side body, the valve closes and flow is interrupted.

Clean-room specifications (Catalog No. CB-033SA)

● Anti-dust generation structure for use in cleanrooms

CHV2-.....-P7*

CHV2-.....-P80

Internal structure and parts list

● CHV2-6,8-J

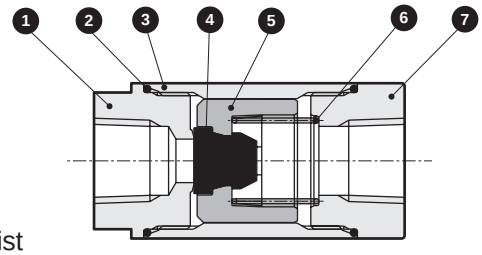

● CHV2-8 to 40

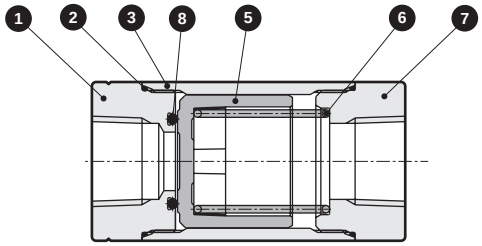

Parts list

No.	Part name	Material	No.	Part name	Material
1	Cover A	Aluminum alloy	5	Valve guide	Polyacetal
2	O-ring	Nitrile rubber (fluoro rubber)	6	Coil spring	Stainless steel
3	Tube	Aluminum alloy	7	Cover B	Aluminum alloy
4	Valving element	Nitrile rubber (fluoro rubber)	8	O-ring	Nitrile rubber (fluoro rubber)

* Materials shown in ( ) are for option “A” (fluoro rubber specifications).

Dimensions

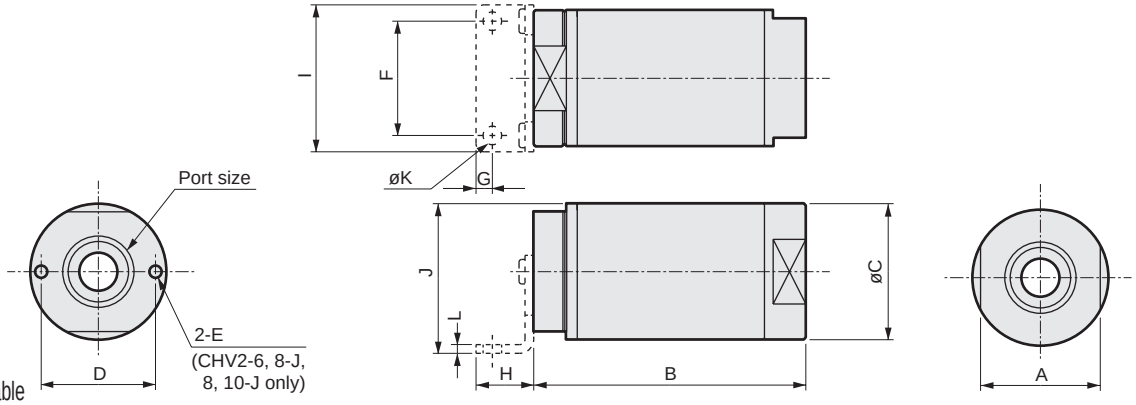

Dimensions table

Model No.	Port size	A	B	øC	D	E	F	G	H	I	J	øK	L
CHV2-6	Rc1/8	22	50	25	21	M2.5	21	3	10.5	27	27.5	3.4	1.6
CHV2-8-J	Rc1/4												
CHV2-8		27	60	31	26	M3	25	5	14	32	34	4.4	
CHV2-10-J	Rc3/8												
CHV2-10		32	75	38	-	-	-	-	-	-	-	-	-
CHV2-15	Rc1/2												
CHV2-20	Rc3/4	42	95	47	-	-	-	-	-	-	-	-	-
CHV2-25	Rc1												
CHV2-32	Rc1¼	63	140	72	-	-	-	-	-	-	-	-	-
CHV2-40	Rc1½												

⚠ Safety precautions

■ Use/maintenance

Installation of CHV2

● After temporarily tightening the mounting port by hand, tighten with a tool on the width across flats.
When connecting the pipe, tighten using the recommended tightening torque.
When removing the piping from this product, use the on the side the width across flats of piping to be removed. If the width across flats on the opposite side is used, the cover could loosen and lead to external leakage.

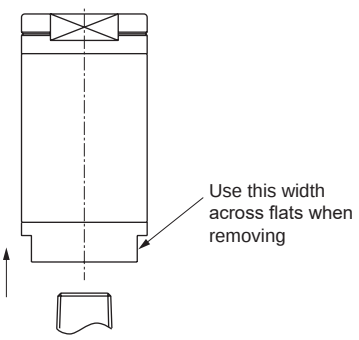

● Check JIS symbols on the product nameplate and pipe accordingly.
If pressure is applied from IN, fluid will flow freely. If pressure is applied from OUT, fluid will be blocked. The side of the cover with a groove is IN, so check the direction when piping.

● Depending on the usage and piping conditions, note that abnormal noise may occur due to chattering when the valving element is not fully closed.

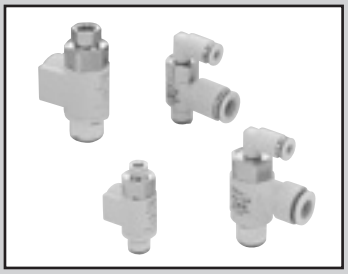

Block valve

FPV Series

● Port size: M5, R1/8 to 1/2

JIS symbol

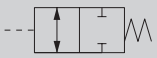

RoHS CAD

Features

- Compact valve ideal for position locking and for cylinder braking.
- Compact and lightweight
  75% smaller and 50% lighter on average compared with our conventional models.
- Variety of bore sizes available
  Series variations from M5 to R1/2 bore sizes enable direct cylinder installation.

Specifications

Item	FPV-M5	FPV-6A			FPV-8A			FPV-10A			FPV-15A		
Port size	M5	R1/8			R1/4			R3/8			R1/2		
Main side compatible tube O.D.	ø6	ø6	ø8	Rc1/8	ø6	ø8	Rc1/4	ø8	ø10	Rc3/8	ø10	ø12	Rc1/2
Pilot side compatible tube O.D.	ø4			M5	ø4		M5	ø4		Rc1/8	ø4		Rc1/8
Working fluid	Compressed air												
Max. working pressure MPa	1.0 (≈150 psi, 10 bar)												
Min. working pressure MPa	0 (≈0 psi, 0 bar)												
Proof pressure MPa	1.5 (≈220 psi, 15 bar)												
Pilot pressure MPa	* Refer to page 803.												
Fluid temperature °C	5 (41°F) to 60 (140°F)												
Ambient temperature °C	0 (32°F) to 60 (140°F) (no freezing)												
Weight g	28	26		36	50	51	68	90	93	120	143	145	192
Effective cross-sectional area mm^2	1.3	5			10			17			27		

How to order

FPV - 6A - 06

Ⓐ Port size

Ⓑ Compatible tube O.D.

Ⓐ Port size	
M5	M5
6A	R1/8
8A	R1/4
10A	R3/8
15A	R1/2

Ⓑ Compatible tube O.D.		Ⓐ Piping port size				
		M5	6A	8A	10A	15A
06	ø6	●	●	●		
08	ø8		●	●	●	
10	ø10				●	●
12	ø12					●
6A	Rc1/8		●			
8A	Rc1/4			●		
10A	Rc3/8				●	
15A	Rc1/2					●

Not available

Applications

● Used for cylinder position locking circuit

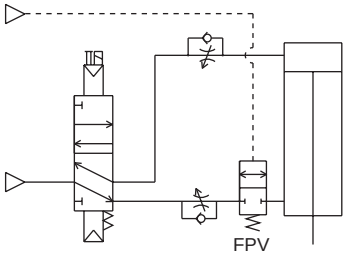

● Used for cylinder braking circuit

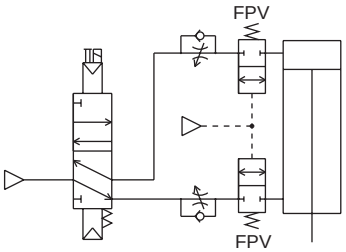

Operational principle

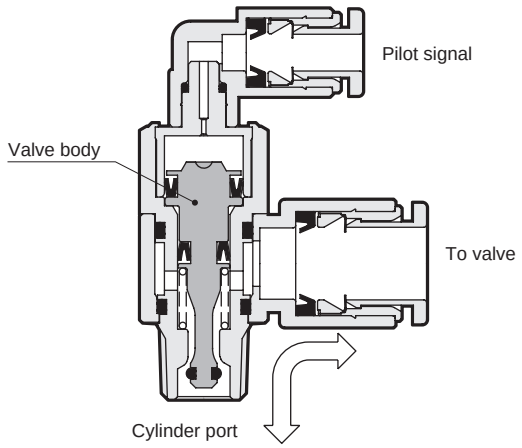

The valve opens if there is a pilot signal, but closes if the pilot signal is cut off.

Pilot pressure

Set pilot air pressure within the specified range.

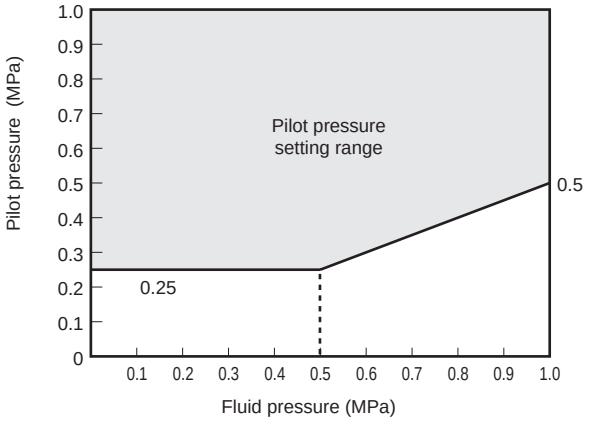

Internal structure and parts list

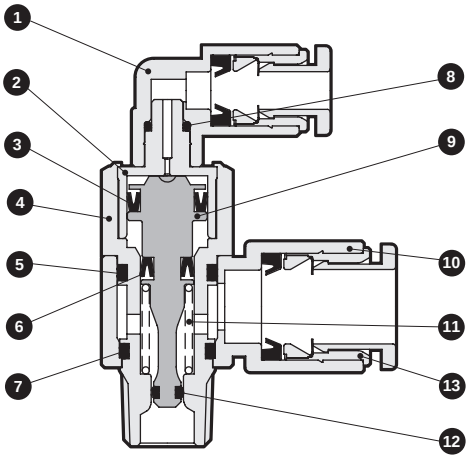

No.	Part name	Material
1	Fitting body	Polybutylene terephthalate (flame-resistant resin)
2	Rotary shaft A	Copper alloy (electroless nickeling)
3	Packing	Nitrile rubber
4	Rotary shaft B	Copper alloy (electroless nickeling)
5	O-ring	Nitrile rubber
6	Packing	Nitrile rubber
7	O-ring	Nitrile rubber
8	O-ring	Nitrile rubber
9	Valve body	Copper alloy (electroless nickeling)
10	Body	Polybutylene terephthalate (flame-resistant resin) *1
11	Spring	Stainless steel
12	O-ring	Nitrile rubber
13	Push-in fitting	

*1: Zinc alloy die-casting is applied for female thread.

Dimensions

CAD

● FPV-M5-06

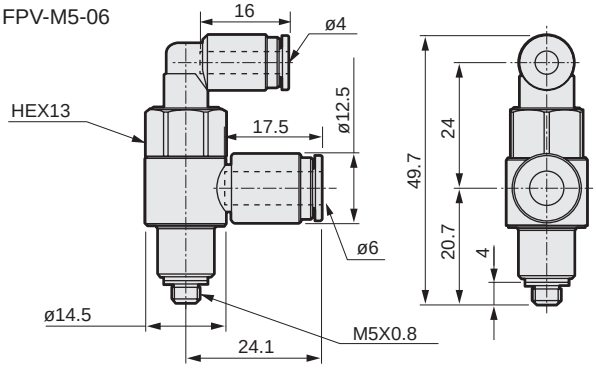

● FPV-6A-6A

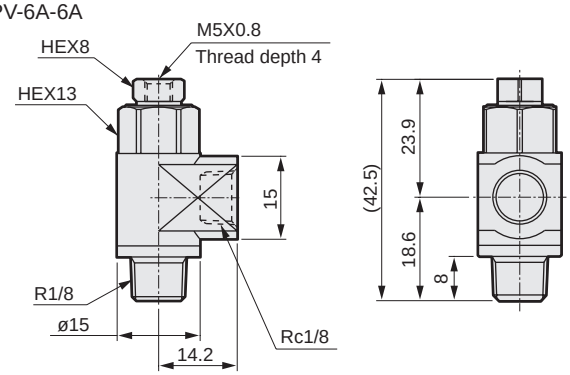

● FPV-6A-$^{06}_{08}$

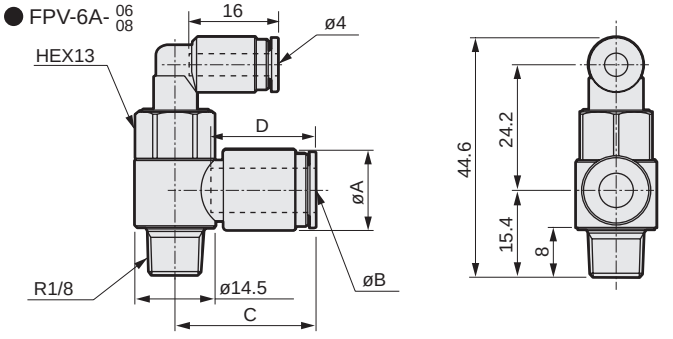

Model No.	A	B	C	D
FPV-6A-06	ø12.5	ø6	24.1	17.5
FPV-6A-08	ø14.5	ø8	25.3	19.0

Dimensions

● FPV-8A-$^{06}_{08}$

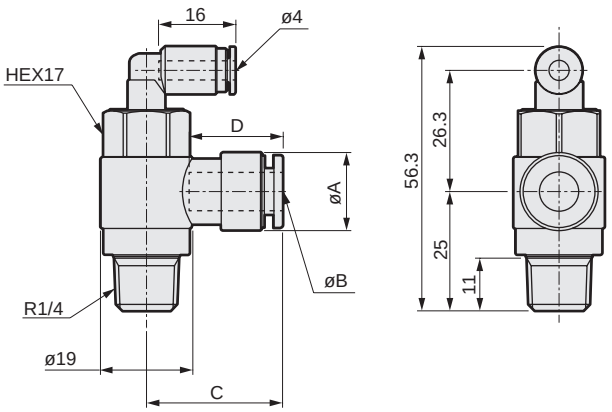

● FPV-8A-8A

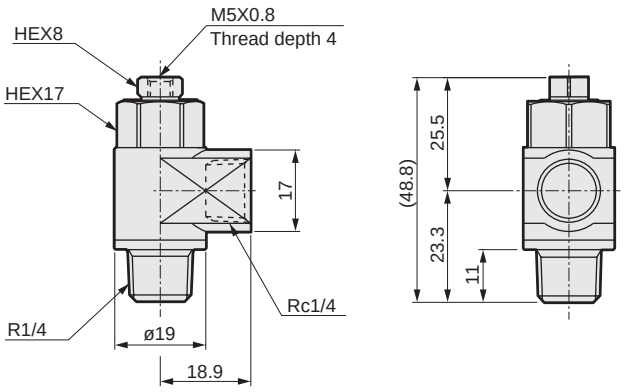

● FPV-10A-$^{08}_{10}$

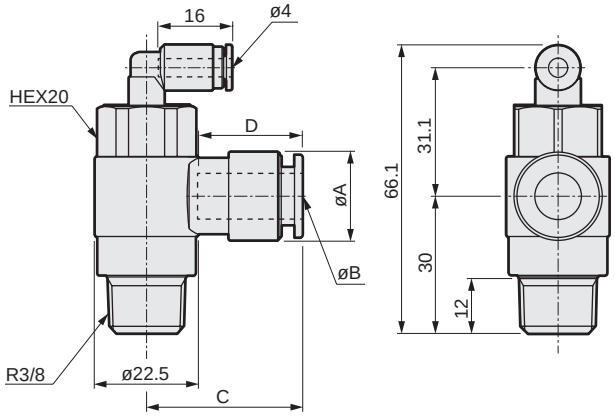

● FPV-10A-10A

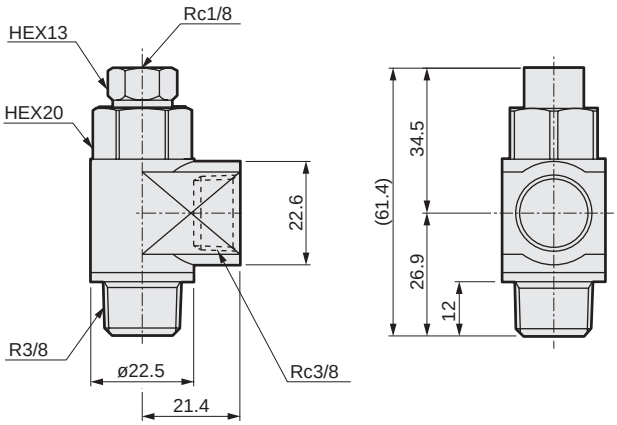

● FPV-15A-$^{10}_{12}$

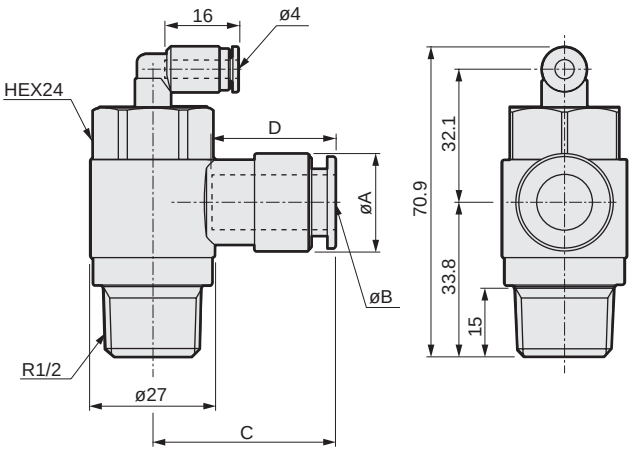

● FPV-15A-15A

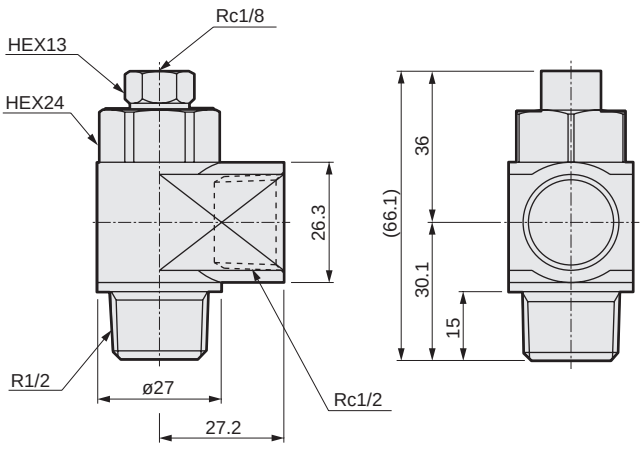

Model No.	A	B	C	D
FPV-8A-06	ø13.8	ø6	26.7	17.5
FPV-8A-08	ø16.3	ø8	27.7	19
FPV-10A-08	ø16.3	ø8	29.4	19
FPV-10A-10	ø19.3	ø10	32.2	21.5
FPV-15A-10	ø19.3	ø10	34.5	21.5
FPV-15A-12	ø21.3	ø12	37.7	23

⚠ Safety precautions

■ Design/selection

● Confirm whether PTFE can be used.

· The sealant contains PTFE (polytetrafluoroethylene resin) powder. Check that this poses no problem during use.

■ Mounting, installation and adjustment

[Piping]

● When supplying compressed air after connecting pipes, check for air leaks at all piping connections and actuator sections.

· Position locking and braking may not work correctly.

● Set pilot and main pressure within the specified pressure.

· If actuator load factor is high, main pressure increases and cannot be maintained.

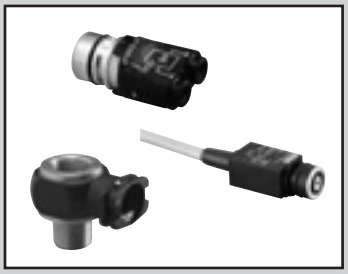

Threshold sensor

PWS Series

Detects exhaust pressure near the stroke end accurately.

● Port size: M5 (Rc or R) 1/8 to 1/2

JIS symbol 

Manufacturer Telepneumatic

CAD

Specifications

Universal fitting connector

Item	PWS-B155	PWS-B1882	PWS-B1992
Working fluid	Compressed air		
Max. working pressure MPa	0.8		
Min. working pressure MPa	0		
Proof pressure MPa	1.5		
Fluid temperature °C	5 to 60		
Ambient temperature °C	-10 to 60 (no freezing)		
Port size	M5	R(c)1/8	R(c)1/4
Effective cross-sectional area mm^2	3	20	50
Flow rate ℓ/min (ANR) *1	190	1300	3200
Weight kg	0.01	0.04	0.05

Built-in sensor module

Item	PWS-P111	PWS-M1012
Output method	Compressed air	Electric
Switching pressure MPa *2	0.04	0.06
Fluid temperature °C	5 to 60	
Ambient temperature °C	-10 to 60 (no freezing)	
Effective cross-sectional area mm^2	1.2	—
Flow rate ℓ/min (ANR) *1	80	—
Output connection	ø4 push-in fitting	0.5 mm^2× 3-wire
Max. voltage	—	250 VAC 5 A or 48 VDC 5 W
Contact type	—	C contact
Insulation class	—	Class B
Compatible tube	O.D. ø4.0, I.D. ø2.5 hard nylon tube	—

*1: The flow is a value at pressure 0.5 MPa.
*2: Switching pressure for PWS-P111 is that output by the air pressure signal to port S.
Select pressure for PWS-M1012 is the pressure changed by the electrical contact.

Operational principle

The threshold sensor is attached like a fitting to the cylinder port. This sensor detects pressure change generated at both ends of the piston or a drop in exhaust pressure (P2) near the stroke end and issues an air pressure signal (S) when P_2 is less than the switching pressure. (Refer to Fig. 1, 2)

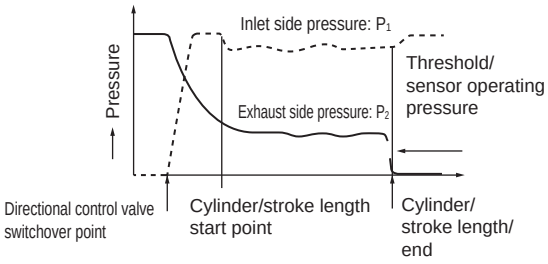

Fig. 1

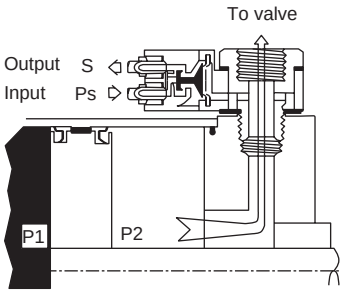

Fig. 2

Usage methods

A limit switch is used to confirm cylinder operation. If it is difficult or time consuming to install a limit switch, this fitting threshold sensor can be used. (Refer to Fig. 3)

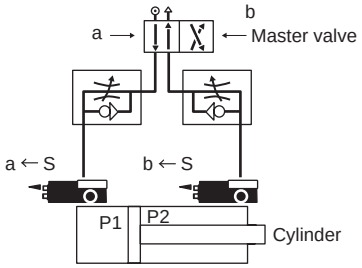

Fig. 3

Connection and installation

- The modular threshold sensor consists of two parts, a built-in sensor module and free fitting connector.
- Connector (free fitting)
  The sensor (detector) to be installed directly on the cylinder port is attached to the connector with a clip. A speed controller, cylinder stop valve, etc., can be mounted on the connector. The connector can be tightened to the port with the hex socket head cap screw inside the connector. (Refer to Fig. 5)
- Built-in sensor module
  Either pneumatic or electric signal outputs can be selected. (Refer to Fig. 4)

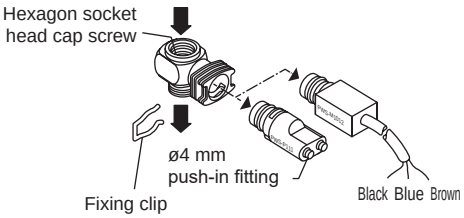

Fig. 4

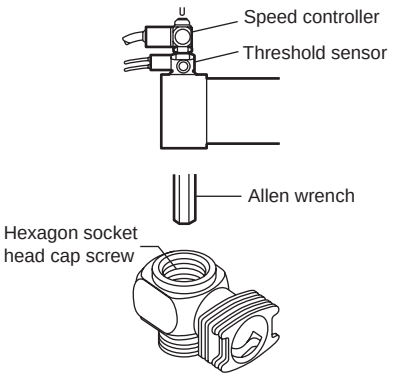

Fig. 5

Connection

- Air pressure outlet module
  ø4 mm tube connection
- Electric output module
  (C contact)

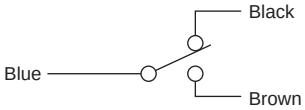

Dimensions

● PWS-B1**2

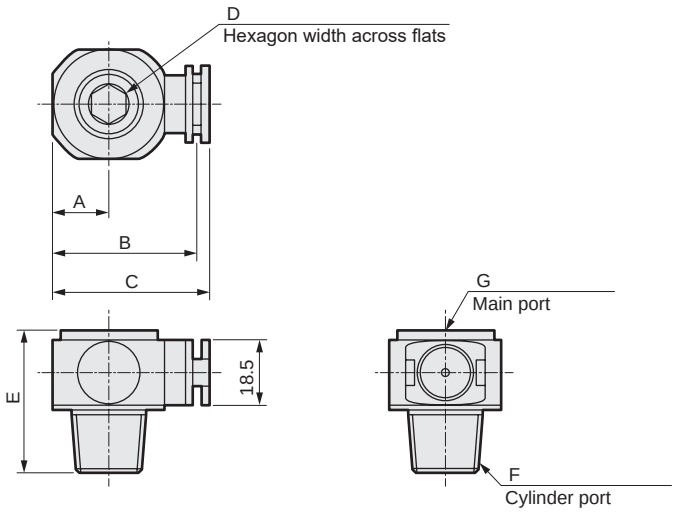

● PWS-B155

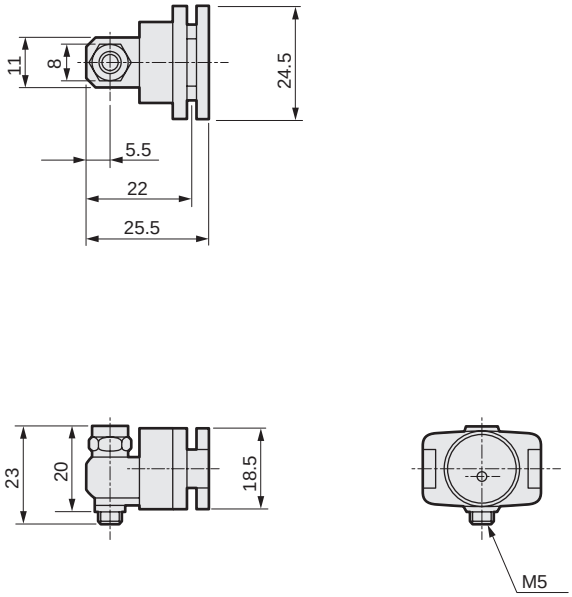

Model No.	A	B	C	D	E	F	G
PWS-B1882	8	28	31.5	5	28	R 1/8	Rc1/8
PWS-B1992	10.5	32.5	36	8	32.5	R 1/4	Rc1/4

● PWS-P111

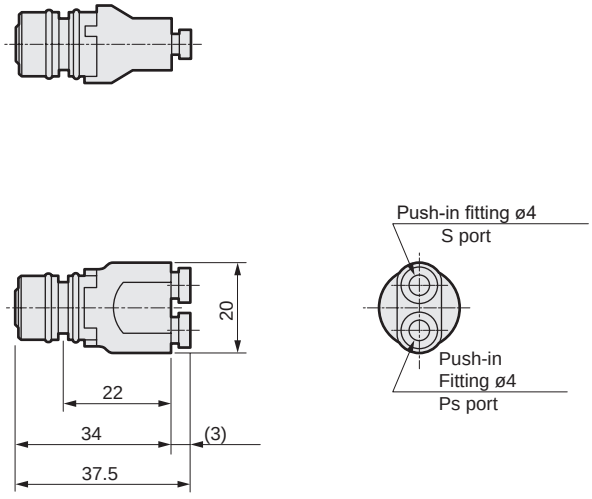

● PWS-M1012

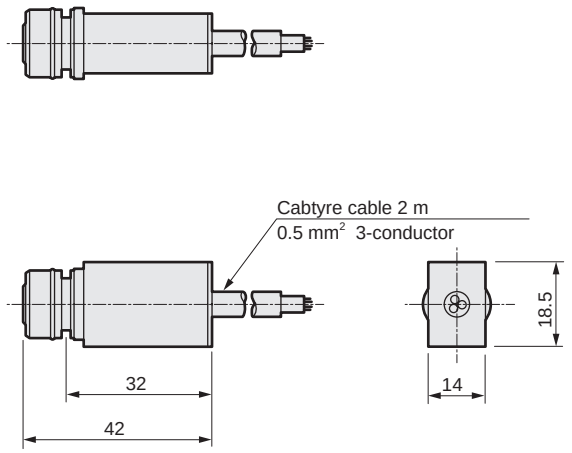

MEMO

Safety Precautions

Be sure to read this section before use.
Refer to Intro Page 63 for general precautions regarding pneumatic components and refer to "⚠Safety precautions" for detailed precautions for individual series.

Design/selection

⚠CAUTION

■Use the product in the range of conditions specified for the product. Consult with CKD when using the product for special applications.

- Use of the product exceeding the specifications range may result in insufficient performance and its safety cannot be guaranteed.
- This product may not be usable in special applications and environments.
  For example, use for applications requiring safety, including nuclear energy, railways, aircraft, vehicles, medical devices, devices in contact with beverages or foodstuffs, amusement devices, emergency cutoff circuits, press machines, brake circuits, or safety devices or applications.

■Confirm before use that the product will withstand the working environment.

- Cannot be used in environments where its functions will be impeded.
  Such environments include high temperatures, chemical atmospheres, or where chemical liquids, vibration, moisture, water dripping or gas is present. Environments where ozone is generated.
- Do not use the product in a place where it could come in direct contact with coolant or spatter, etc.

■Understand the characteristics of compressed air before designing a pneumatic circuit.

- The same functions as the mechanical, hydraulic and electrical methods cannot be anticipated if instantaneous stopping and holding are required during an emergency stop.
- Pop-out, air discharge, or leakage due to air compression and expansion may occur.

■This valve cannot be used as a stop valve that requires no leakage. Slight leakage is allowed for in this product's specifications.

■Install a "pressure switch" and "residual pressure exhaust valve" on the device's compressed air supply side.

- The pressure switch will disable operation until the set pressure is reached. The residual pressure exhaust valve releases compressed air into the pneumatic pressure circuit to prevent accidents caused by operation of pneumatic components under residual pressure.

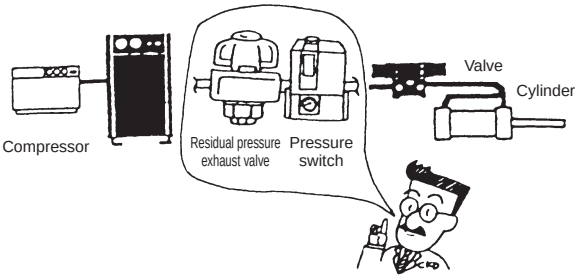

■Indicate the maintenance conditions in the device's instruction manual.

- The product's performance may drop too low to maintain an appropriate safety level depending on usage conditions, working environment and maintenance status. With correct maintenance, the product functions can be used to the fullest.

■Rubber parts deteriorate and service life is shortened if ultra dry air is used.

Mounting, installation and adjustment

Piping

⚠CAUTION

■ Do not remove the package or seal cap on the piping port until just before piping the product.
- Removing the piping port cap before piping work may cause foreign matter to enter the pneumatic components from the piping port, resulting in failure or malfunction.

■ When connecting pipes, wrap sealing tape in the opposite direction to the threading, from the inside position to within 2 mm from the pipe end.
- If sealing tape protrudes from the pipe threads, it could be cut when screwing the bolts in. This could cause the tape to enter the pneumatic components, causing failures.

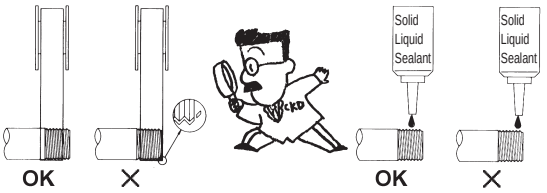

■ Handling push-in fittings and tubes
- Refer to fitting and tube warnings and cautions (pages 910 to 913) for handling push-in fittings and tubes.

■ Always flush just before piping pneumatic components.
- Any foreign matter that has entered during piping must not enter the pneumatic components.

■ When supplying compressed air after connecting pipes, do not suddenly apply high pressure.
- The pipe connection could dislocate, causing the pipe tube to fly out, leading to accidents.

■ After connecting the pipes, always check all pipe connections for air leaks before supplying compressed air.
- Apply a leakage detection agent to pipe connections with a brush and check for air leaks.

■ Apply the recommended tightening torque when connecting pipes.
- The purpose is to prevent air leakage and damage to bolts.
- First tighten the bolts by hand to ensure that the threads are not damaged, then use a tool.
- Do not tighten while pressure is applied.



[Recommended tightening torque]

Port thread	Tightening torque N·m
M5	1.0 to 1.5
Rc1/8	3 to 5
Rc1/4	6 to 8
Rc3/8	13 to 15
Rc1/2	16 to 18
Rc3/4	19 to 40
Rc1	41 to 70
Rc1 1/4	43 to 75
Rc1 1/2	45 to 80

■ Connect piping so that connections are not dislocated by equipment movement, vibration, tension, etc.
- Control of actuator speed will be disabled if piping on the exhaust side of the pneumatic circuit is disengaged.
- When using the chuck holding mechanism, the chuck may be released, creating a hazardous state.

■ Around the pneumatic components, keep space for installation, removal and piping work.

■ Install a pneumatic filter just before the pneumatic component in the circuit.

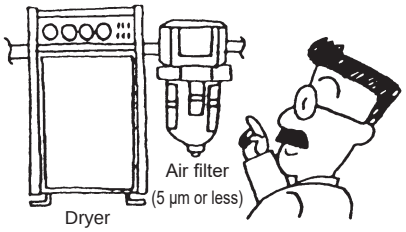

- Observe the following precautions when using nylon or urethane tubes as the piping material.
  - ·Use the designated tube and CKD plastic plug (GWP Series). Do not use a metal plug as it may cause problems.
  - Tube outer diameter accuracy
    - · Polyamide tube.....Within ±0.1 mm
    - · Polyurethane tube (up to ø6) .....Within ±0.1 mm
      (up to ø8) .....Within $^{+0.1}_{-0.15}$ mm
  - Use a tube with hardness of 92˚ or more. If a tube that does not satisfy the diameter accuracy or hardness is used, the chucking force may decrease, the tube may come off or be difficult to insert. Contact CKD when using a non-designated tube or plug.
  - ·Cut the tube with a dedicated cutter and always at a right angle.
  - ·Use the tubing so that it does not become worn or damaged. Tubing could collapse or rupture.
  - ·A used tube could be deteriorated or deformed and so always use a new tube.
  - · Do not let the tube directly contact other surfaces, as there is a risk of wear or damage.
- Do not use this product for applications involving constant rotation or oscillations, or in which tubes move violently.
- Use the tubing so that it is within the min. bending radius and long enough to avoid sharp bends.
  - ·Consider changes in tubing length caused by pressure when tubing is connected and provide sufficient length within the min. tube bending radius.
- Make sure that there is no torsion, tension or moment load applied to the fitting or the tube.
- Do not tighten while pressure is applied.

Use/maintenance

⚠WARNING

■Stop air flow and confirm that there is no residual pressure before replacing the tube.

Fittings/tubes

■ Pneumatic auxiliary components

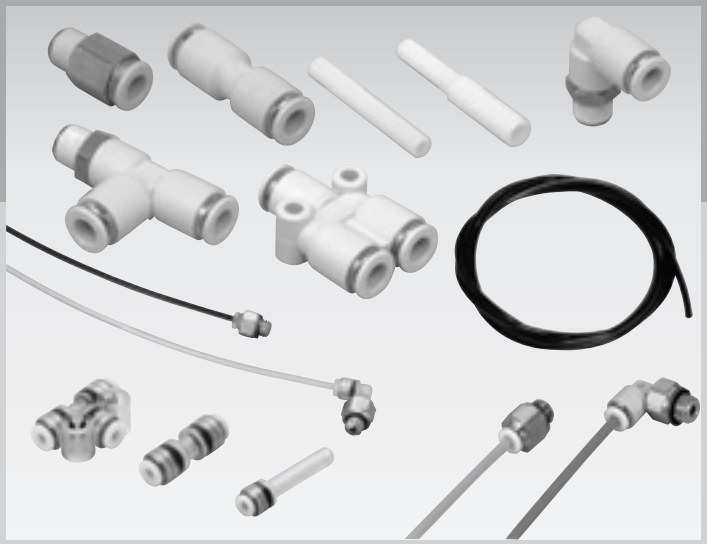

CONTENTS

Series variation 814

Fitting

- Miniature fitting (F) 816
- Fitting (GW) 824
- Fitting/Mini fitting (GWJ) 838
- Fitting stainless steel (ZW) 844
- Fitting stainless steel (ZSP) 848
- Tightening fitting stainless steel (ZJ) 857
- Tightening fitting (MJ)/fitting (JL) 863
- Rotary fitting (RJF) 870

Fiber tube 875

- Antistatic, dedicated fitting 877
- Antistatic and clean-room fiber tube for push-in fitting 883

Push-in fitting for fiber tube (standard/clean-room) 883

- Flame-resistant for push-in fitting 897
- Push-in fitting for fiber tube (flame-resistant) 897

Tube

- Tube cutter (AZ) 902
- Antistatic tube (UP-**-F1) 903
- Soft nylon tube (FH/F) 906
- New urethane tube (NU) 907
- Urethane tube (U) 908
- Coiling tube (KX) 908
- Flame-resistant tube (SR2) 909

⚠ Safety precautions 910

Fitting

Model/appearance	Features	Compatible tube diameter	Port size						Page
			M3	M5	1/8	1/4	3/8	1/2	
● Miniature fitting F Series 	Miniature barbed, clamp fitting	ø3.2	●	●	●				816
		ø4	●	●	●				
		ø6		●	●				
● Fitting GW Series 	Push-in fitting Standard sealant is applied to round screws Flame-resistant resin has been adopted as a standard material	ø3.2	●	●					824
		ø4	●	●	●	●			
		ø6		●	●	●	●		
		ø8			●	●	●		
		ø10			●	●	●	●	
		ø12				●	●	●	
		ø16					●	●	
● Fitting Mini fitting GWJ Series 	Push-in fitting Compact Standard sealant is applied to round screws	ø3.2	●	●	●				838
		ø4		●	●				
		ø6		●	●				
● Fitting stainless steel ZW Series 	Push-in fitting Flame-resistant resin has been adopted as a standard material SUS304 is used for body metal Standard sealant is applied to round screws	ø4		●	●	●			844
		ø6		●	●	●	●		
		ø8			●	●	●		
		ø10				●	●	●	
		ø12					●	●	
● Fitting stainless steel ZSP Series 	Push-in fitting SUS303 or equivalent is used for body metal Standard sealant is applied to round screws	ø4		●	●	●			848
		ø6		●	●	●	●		
		ø8			●	●	●		
		ø10			●	●	●	●	
		ø12				●	●	●	
● Tightening fitting stainless steel ZJ Series 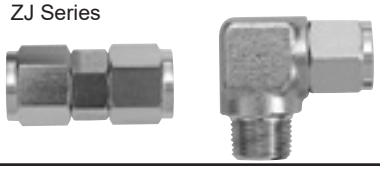	Easy-to-fit mechanism, tightening fitting SUS316 is used for body metal	ø4			●	●			857
		ø6			●	●	●		
		ø8			●	●	●		
		ø10				●	●	●	
		ø12				●	●	●	
● Tightening fitting MJ/JL Series 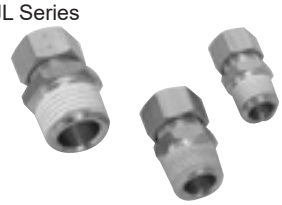	Tightening fitting Can be used for copper tube	ø4			●	●	●		863
		ø6			●	●	●		
		ø8			●	●	●		
		ø10				●	●	●	
		ø12				●	●	●	
		ø15					●	●	
● Rotary fitting RJF Series 	Built-in bearing for high rigidity/low sliding resistance Ample lineup includes 4/6/8/12/16 circuits	——		●	●				870

Model/appearance	Features	Compatible tube diameter	Port size						Page
			M3	M5	1/8	1/4	3/8	1/2	
● Push-in fitting for fiber tube, standard PG Series 	Push-in fitting PP resin incorporated as standard to increase corrosion resistance Standard sealant is applied to round screws	ø1.8	●	●	●				883
● Push-in fitting for fiber tube clean-room CG Series 	Push-in fitting PP resin incorporated as standard to increase corrosion resistance SUS304 is used for body metal	ø1.8	●	●	●				883
● Push-in fitting for fiber tube Flame-resistant RG Series 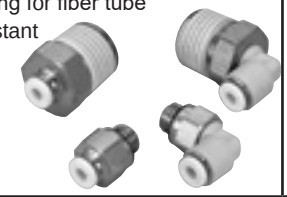	Push-in fitting Flame-resistant resin has been adopted Standard sealant is applied to round screws	ø1.8		●	●				897
● Dedicated fitting for fiber tube PTN* Series 	With retainer collar Standard sealant is applied to round screws	ø1.8	●	●	●				877

Tube

Model	Features	Tube O.D.								Page
		ø1.8	ø3.2	ø4	ø6	ø8	ø10	ø12	ø15	ø16	
Antistatic fiber tube (for push-in fitting)	Extremely fine air tube as fine and flexible as lead wire. Increased flow rate with large tube size and enhanced usability with push-in fitting	●									883
Fiber tube for clean-room (for push-in fitting)	High corrosion resistant materials (special polyolefin) incorporated for use in cleanrooms. Ideal for fields requiring a clean environment, including semiconductor manufacturing, medicine and foodstuff manufacturers.	●									883
Flame-resistant fiber tube (for push-in fitting)	Push-in fitting tubing using flame-resistant materials. Ideal for piping in narrow space while maintaining flexibility.	●									897
Antistatic fiber tube	Extremely fine air tube as fine and flexible as lead wire. Ideal for difficult piping in narrow spaces or for short distance piping.	●									877
Antistatic tube	This tubing prevents electrostatic discharge and dust from accumulating. Features flexibility that makes it ideal for difficult piping in narrow spaces.		●	●	●	●	●	●			903
Soft nylon tube	Very flexible compared to the conventional nylon tubes and optimal for piping in small or complicated spaces.		●	●	●	●	●	●	●	●	906
New urethane tube	Thanks to a new manufacturing process, the same outer diameter is realized while a larger inner diameter. This piping tube is also used for larger flow rates.			●	●	●	●	●			907
Urethane tube	Durable and flexible thanks to its high mechanical strength.		●	●	●	●	●	●			908
Coiling tube	This is a coiling extensible tube.				●	●	●	●			908
Flame-resistant tube	Revolutionary tube made using flame-resistant materials. Even if welding sparks, etc., come into contact, the tube will not continue to burn.			●	●	●	●	●			909

F Miniature fitting

Port size M3 to 1/8 (Rc or R)

RoHS CAD

- 44 miniature fittings are available with port size M3, M5, bore size ø3.2, ø4, ø6

■ Barbed fitting

Straight/FTS	Elbow/FTL	Tee/FTT	Barbed nipple/FTS-0
			
· Compatible tube O.D.: ø3.2 to ø6 · Refer to page: 818	· Compatible tube O.D.: ø3.2 to ø6 · Refer to page: 818	· Compatible tube O.D.: ø3.2 to ø6 · Refer to page: 818	· Compatible tube O.D.: ø3.2 to ø6 · Refer to page: 818

■ Clamp fitting

Straight/FCS

· Compatible tube O.D.: ø3.2 to ø6 · Refer to page: 819

■ Double screw nipple

Straight/FNS

· Refer to page: 819

■ Socket

Elbow/FCL	Straight/FSS	Elbow/FSL	Tee/FST
			
· Compatible tube O.D.: ø3.2 to ø6 · Refer to page: 819	· Refer to page: 819	· Refer to page: 820	· Refer to page: 820

■ Adjustable socket

Elbow/FAL	Tee/FAT	Cross/FAX	Modified tee/FAY
			
· Refer to page: 820	· Refer to page: 820	· Refer to page: 821	· Refer to page: 821

■ Bush

FBS

· Refer to page: 821

■ Bulkhead

FWS Sales unit: 5

· Refer to page: 821

■ Plug

FPL

· Refer to page: 822

■ Extension

FLS

· Refer to page: 822

■ Manifold

FMB Sales unit: 1	FMH Sales unit: 1
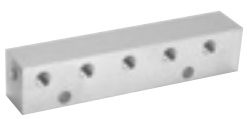	
· Refer to page: 822	· Refer to page: 822

■ Gasket

FGS Sales unit: 100

· Refer to page: 822

- If the quantity of units is not specified in the chart, the product is packed as 10 pcs/bag.

Specifications

Item	F
Working fluid	Compressed air
Max. working pressure MPa	0.7 (≈100 psi, 7 bar) or less
Ambient/fluid temperature °C	-5 (23°F) to 60 (140°F) (no freezing)
Tube used	Soft nylon tube (model No. FH-3224, F-1504, F-1506) Urethane tube (model No. U-9504, U-9506) Note

Note: Use urethane tube within 0 to 60°C.
(Refer to page 902 for tube dimensions and working pressure.)

How to order

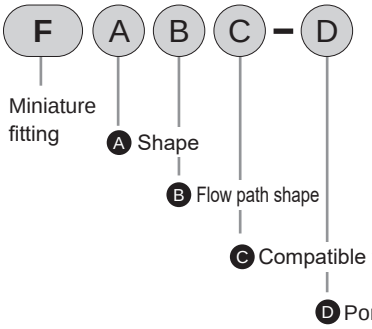

*1: Refer to the model No. on the dimensions page (pages 818 to 822) for details on model combinations.
*2: Sales unit is 10 pcs./bag.
For the sales unit of each model, refer to the series variation on page 816.

Ozone-proof specifications (Ending Page 9)

F ……- **P11**

Clean-room specifications (Catalog No. CB-033SA)

F ……- **P80**

Internal structure and parts list

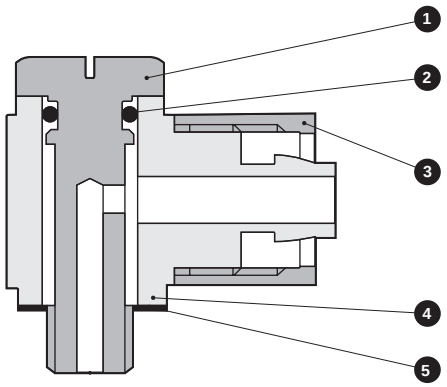

The figure shows FCL type.

No.	Part name	Material	Treatment
1	Bolt	Copper alloy	Electroless nickel plating
2	O-ring	Nitrile rubber	——
3	Clamp ring	Copper alloy	Electroless nickel plating
4	Body	Copper alloy	Electroless nickel plating
5	Gasket	Nitrile rubber/steel	——

⚠Safety precautions

(1) If urethane tube is used with 40°C or more, use a clamp fitting.
(2) For compatible tube O.D. tolerance, use an item within ±0.1 for nylon, or $^{+0.1}_{-0.15}$ for urethane.
(3) Type with slit on clamp ring of clamp fitting is for tube O.D. 3.2 mm.
(4) If elbows, tees, crosses, irregular tees or barbed fittings are used at frequently moving tube sections, trouble may occur. Avoid this kind of usage.
(5) Bending radius of tube is to be the right value or more near a fitting.

Min. bending radius mm		Barbed fitting	Clamp fitting
ø3.2	Soft nylon	20	10
ø4	Soft nylon	20	10
	Urethane	20	10
ø6	Soft nylon	40	20
	Urethane	40	20

Dimensions: Barbed fitting (straight, elbow, tee, barbed nipple) CAD

Barbed fitting

[Sales unit is 10 pcs./bag]

● Straight/FTS

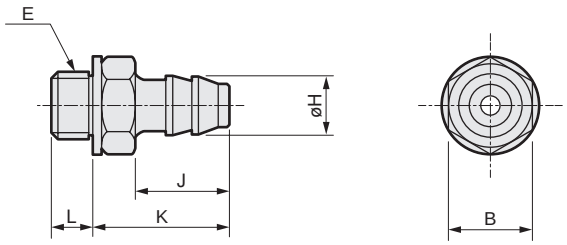

Model No.	Compatible tube O.D. ø	B	E	Min. bore size	H	J	K	L	Eff. X-sectional area (mm²)	Weight g
FTS4-M3	ø3.2,ø4	4.5	M3x0.5	0.8	2.9	5.5	7.9	2.6	0.4	0.8
FTS4-M5	ø3.2,ø4	7	M5x0.8	1.8	2.9	5.5	8.6	2.9	2.1	1.5
FTS4-6	ø3.2,ø4	10	R1/8	1.8	2.9	5.5	9.5	8	2.1	5.9
FTS6-M5	ø6	7	M5x0.8	2.5	4.7	7	10.1	2.9	4.1	1.8
FTS6-6	ø6	10	R1/8	2.5	4.7	7	11	8	4.1	6.2

● Elbow/FTL

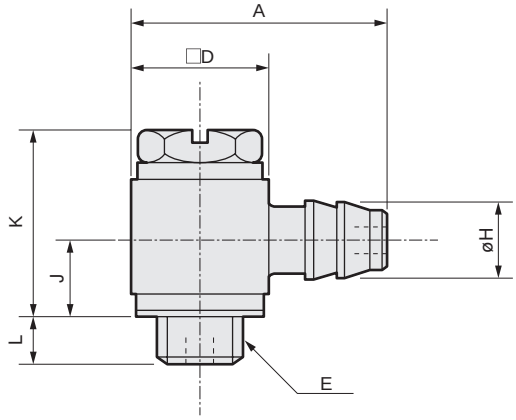

Model No.	Compatible tube O.D. ø	A	D	E	Min. bore size	H	J	K	L	Eff. X-sectional area (mm²)	Weight g
FTL4-M3	ø3.2,ø4	10.5	5	M3x0.5	1	2.9	2.9	6.8	2.6	0.4	1.5
FTL4-M5	ø3.2,ø4	13.5	8	M5x0.8	1.8	2.9	5.1	11.6	2.9	1.3	5.3
FTL6-M5	ø6	15	8	M5x0.8	1.8	4.7	5.1	11.6	2.9	1.5	5.6

● Tee/FTT

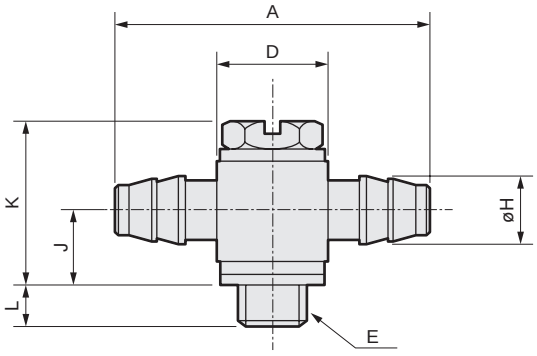

Model No.	Compatible tube O.D. ø	A	D	E	Min. bore size	H	J	K	L	Eff. X-sectional area (mm²)	Weight g
FTT4-M3	ø3.2,ø4	16	5	M3x0.5	1	2.9	2.9	6.8	2.6	0.4	1.6
FTT4-M5	ø3.2,ø4	19	8	M5x0.8	1.8	2.9	5.1	11.6	2.9	1.3	5.3
FTT6-M5	ø6	22	8	M5x0.8	1.8	4.7	5.1	11.6	2.9	1.5	6.0

● Barbed nipple/FTS*-0

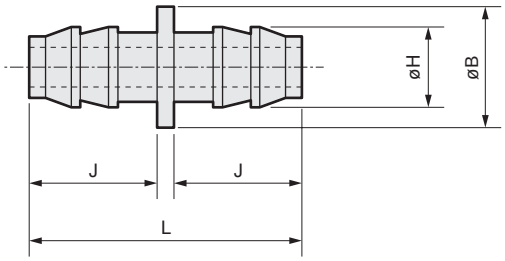

Model No.	Compatible tube O.D. ø	B	Min.Hole diameter	H	J	L	Eff. X-sectional area (mm²)	Weight g
FTS4-0	ø3.2,ø4	5	1.8	2.9	5.5	12	2.1	0.5
FTS6-0	ø6	7	2.5	4.7	7	15	4.1	1.5

Dimensions: Clamp fitting (straight, elbow)/double screw nipple (straight)/socket (straight)

CAD

[Sales unit is 10 pcs./bag]

Clamp fitting

● Straight/FCS

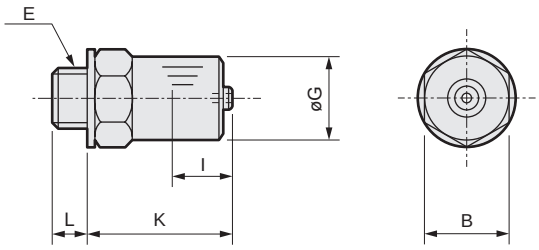

Model No.	Tube O.D. ø	B	E	Min. bore size	G	I	K	L	Eff. X-sectional area (mm²)	Weight g
FCS3-M5	ø3.2	7	M5x0.8	1.8	7	4.3	11.7	2.9	2.1	3.2
FCS3-6	ø3.2	10	R1/8	1.8	7	4.3	12.1	8	2.1	7.2
FCS4-M5	ø4	7	M5x0.8	1.8	7	4.3	11.7	2.9	2.1	3.1
FCS4-6	ø4	10	R1/8	1.8	7	4.3	12.1	8	2.1	7.2
FCS6-M5	ø6	8	M5x0.8	2.5	9	5	12.4	2.9	4.1	4.4
FCS6-6	ø6	10	R1/8	2.5	9	5	12.8	8	4.1	8.3

● Elbow/FCL

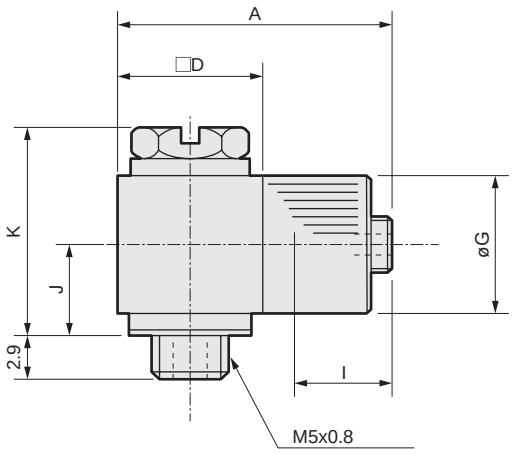

Model No.	Compatible tube O.D. ø	A	D	Min. bore size	G	I	J	K	Eff. X-sectional area (mm²)	Weight g
FCL3-M5	ø3.2	16.1	8	1.8	7	4.3	5.1	11.6	1.3	6.7
FCL4-M5	ø4	16.1	8	1.8	7	4.3	5.1	11.6	1.3	6.7
FCL6-M5	ø6	17.8	9	1.8	9	5	6.1	13.6	1.5	10

Double screw nipple

● Straight/FNS

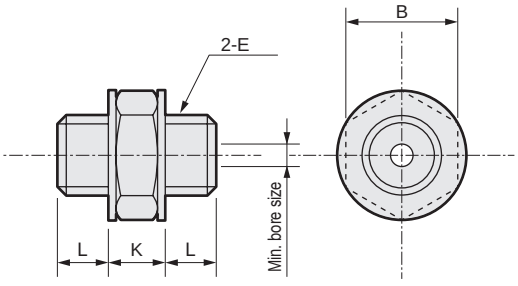

Model No.	B	E	Min. bore size	K	L	Eff. X-sectional area (mm²)	Weight g
FNS-M3	4.5	M3x0.5	0.8	2.8	2.6	0.4	0.6
FNS-M5	7	M5x0.8	1.8	3.7	2.9	2.1	1.9

Socket

● Straight/FSS

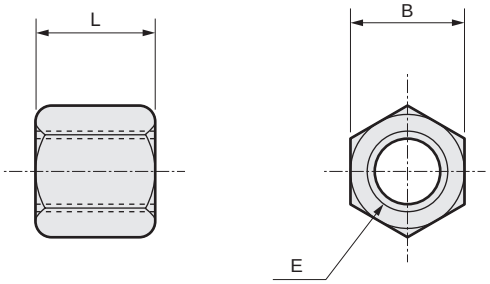

Model No.	B	E	L	Effective cross-sectional area (mm²)	Weight g
FSS-M3	4.5	M3x0.5	7	4	0.7
FSS-M5	7	M5x0.8	8	9	1.8

Dimensions: Socket (elbow, tee)/adjustable socket (elbow, tee)

CAD

[Sales unit is 10 pcs./bag]

Socket

● Elbow/FSL-M5

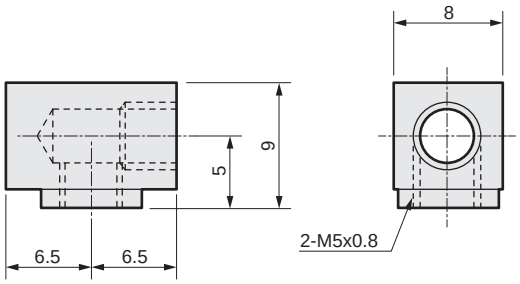

Effective cross-sectional area 8 mm^2
Weight: 5.9g

● Tee/FST-M5

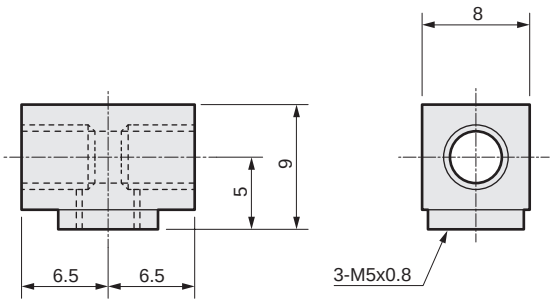

Effective cross-sectional area 8 mm^2
Weight: 5.1g

Adjustable socket

● Elbow/FAL

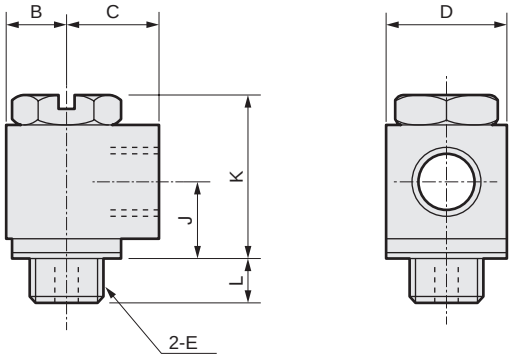

● Tee/FAT

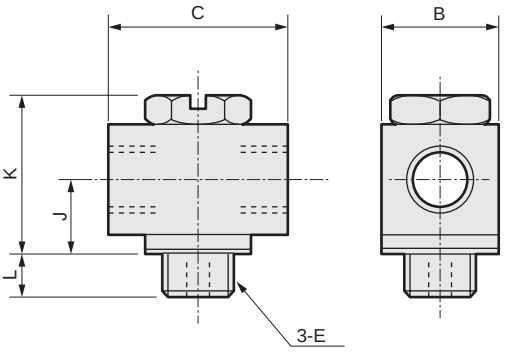

Model No.	B	C	D	E	Min. bore size	J	K	L	Eff. X-sectional area (mm^2)	Weight g
FAL-M3	2.5	4.5	5	M3x0.5	1	2.9	6.8	2.6	0.5	1.7
FAL-M5	4	6.5	8	M5x0.8	1.8	5.6	11.6	2.9	1.7	6.0

Model No.	B	C	E	Min. bore size	J	K	L	Eff. X-sectional area (mm^2)	Weight g
FAT-M3	5	9	M3x0.5	1	2.9	6.8	2.6	0.5	1.9
FAT-M5	8	12	M5x0.8	1.8	5.6	11.6	2.9	1.7	6.4

Dimensions: Adjustable socket (cross, modified tee)/bush/bulkhead

Adjustable socket

● Crossover/FAX-M5 • Sales unit is 10 pcs./bag

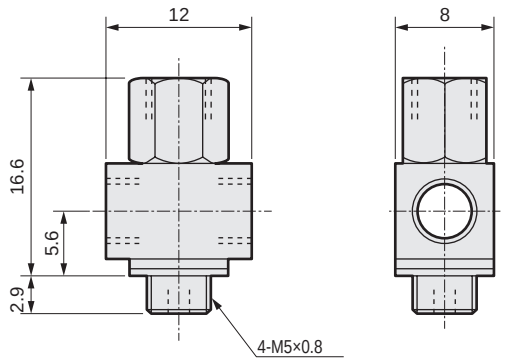

Min. bore size 1.8 mm
Effective cross-sectional area 1.7 mm^2
Weight: 7.4 g

● Modified tee/FAY-M5 • Sales unit is 10 pcs./bag

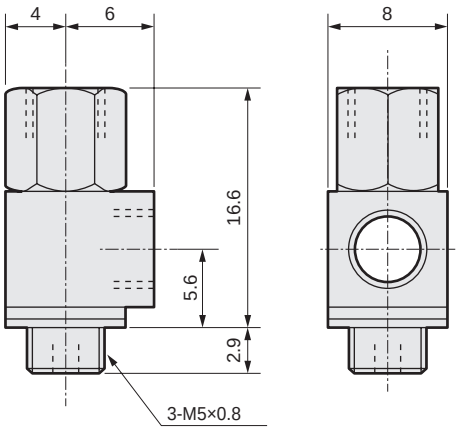

Min. bore size 1.8 mm
Effective cross-sectional area 1.7 mm^2
Weight: 7.0 g

Bush

● FBS • Sales unit is 10 pcs./bag

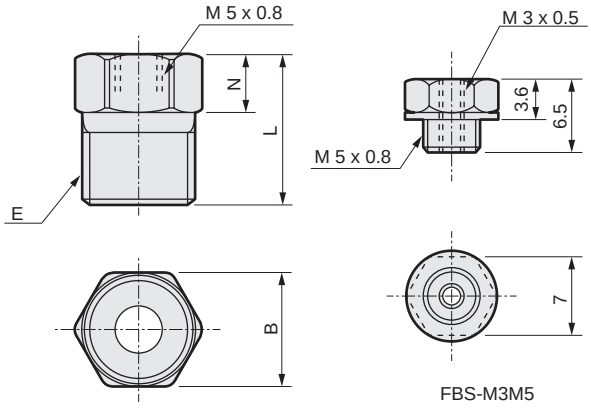

FBS-M56/M58

FBS-M3M5
Weight: 1.3 g
Effective cross-sectional area 4 mm^2

Bulkhead

● FWS • Sales unit is 5 pcs./bag

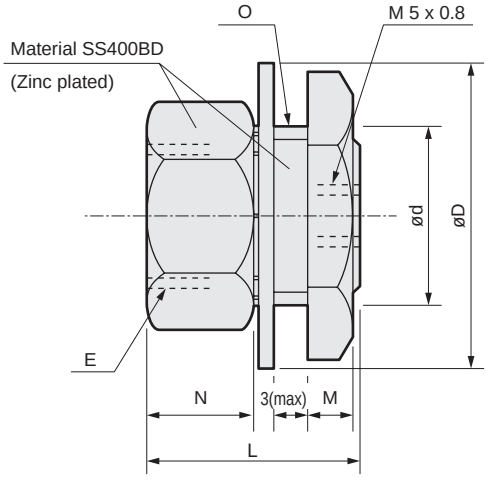

Model No.	B	E	L	N	Effective cross-sectional area (mm^2)	Weight g
FBS-M56	10	R1/8	12	4	9	6.0
FBS-M58	14	R 1/4	16	5	9	16

Model No.	D	d	E	L	M	N	O	Eff. X-sectional area (mm^2)	Weight g
FWS-M5	15	8	M 5 x 0.8	11	3	4	M 8 x 1	9	5.5
FWS-M56	15.2	12	Rc1/8	14	5	7	M 12 x 1	9	15

Dimensions: Plug/extension/manifold/gasket

Plug

● FPL · Sales unit is 10 pcs./bag

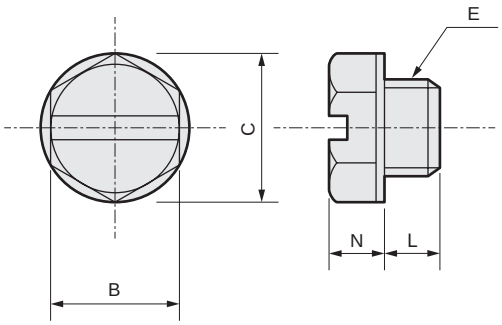

Model No.	B	C	E	N	L	Weight g
FPL-M3	4.5	4.9	M3x0.5	2.4	2.6	0.5
FPL-M5	7	7.8	M5x0.8	3.1	2.9	1.5

Extension

● FLS-M5 · Sales unit is 10 pcs./bag

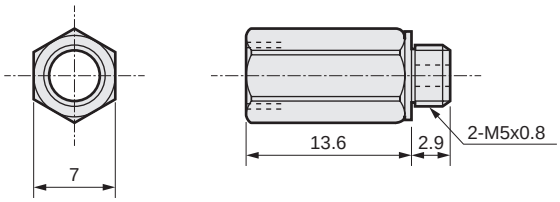

Effective cross-sectional area 2.1mm^2

Weight: 3.7g

Manifold

● FMB-M56 · Sales unit is 1 pcs./bag

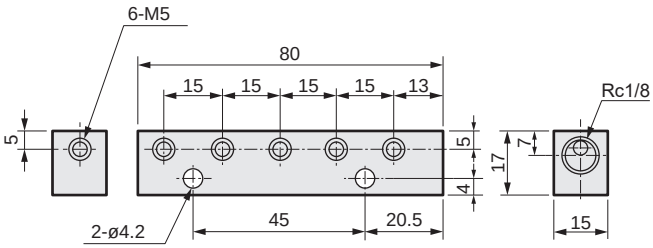

Weight: 50g

● FMH-M56 · Sales unit is 1 pcs./bag

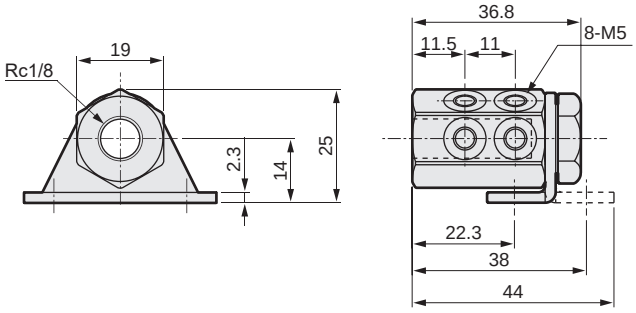

Weight: 82g

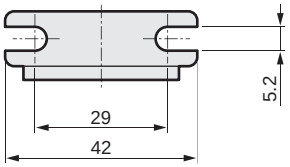

Gasket

● FGS · Sales unit is 100 pcs./bag

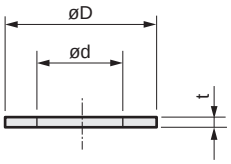

Model No.	D	d	t	Weight g
FGS-M3	4.8	2.8	0.4	0.02
FGS-M5	7.8	4.8	0.6	0.1

MEMO

GW Fitting

Port size M3 to 1/2 (Rc or R)

● Wide connection fittings and models.

CAD

■ Straight

Single straight/ GWS□-□



Compatible tube O.D. ø
4
6
8
10
12
16

·Refer to page: 828

Single straight/ GWS□-□-S



Compatible tube O.D. ø
3.2
4
6
8
10
12

·Refer to page: 828

Female straight/ GWS□-□-M



Compatible tube O.D. ø
4
6
8
10
12

·Refer to page: 828

Bulkhead female/ GWS□-□-E



Compatible tube O.D. ø
4
6
8
10
12

·Refer to page: 828

Bulkhead/ GWS□-□-X



Compatible tube O.D. ø
4
6
8
10
12

·Refer to page: 829

Bulkhead female connector/ GWM□-□-X



Compatible tube O.D. ø
4
6
8
10
12

·Refer to page: 829

Straight/ GWS□-0



Compatible tube O.D. ø
4
6
8
10
12
16

·Refer to page: 829

Different diameter straight/ GWS□-0



Compatible tube O.D. ø
4/6
6/8
8/10
10/12

·Refer to page: 829

Plug reducer/ GWS□-□P



Compatible tube O.D. ø
4
6
8
10

·Refer to page: 830

Plug/ GWP□-0



Fitting port size ø
4
6
8
10
12

·Refer to page: 830

Plug reducer/ GWP□-0



Fitting port size ø
4/6
6/8
8/10
10/12

·Refer to page: 830

■ Elbow

Single elbow/ GWL□-□



Compatible tube O.D. ø
4
6
8
10
12
16

·Refer to page: 830

Long elbow/ GWL□-□-L



Compatible tube O.D. ø
4
6
8
10
12

·Refer to page: 831

Single 45° elbow/ GWL□-□-45



Compatible tube O.D. ø
4
6
8
10
12

·Refer to page: 831

Turn elbow/ GWL□-□-T



Compatible tube O.D. ø
4
6
8
10
12

·Refer to page: 831

■ Tee

Elbow/ GWL□-0



Compatible tube O.D. ø
4
6
8
10
12
16

·Refer to page: 831

Double tee/ GWT□-□



Compatible tube O.D. ø
4
6
8
10
12

·Refer to page: 832

D tee/ GWT□-□-D



Compatible tube O.D. ø
4
6
8
10
12

·Refer to page: 832

Tee/ GWT-0



Compatible tube O.D. ø
4
6
8
10
12

·Refer to page: 832

Y tee/ GWY□-0



Compatible tube O.D. ø
4/4
6/6
8/8
10/10
12/12
6/4
8/6
10/8
12/10

·Refer to page: 832

● Sales unit is 10 pcs./bag.

Product introduction: Page 826
Specifications/model No./internal structure: Page 827

Double Y tee/ GWY□-□



Compatible tube O.D. ø
4
6
8
10
12

·Refer to page: 833

Cross/ GWCR□-0



Compatible tube O.D. ø
8
10
12

·Refer to page: 833

2-port turn elbow/ GWL□-□-2T



Compatible tube O.D. ø
4
6
8
10
12

·Refer to page: 833

Tetrapod (with R)/ GWTR□-□



Compatible tube O.D. ø
4
6
8
10
12

·Refer to page: 833

FY (with R)/ GWFY□-□



Compatible tube O.D. ø
4
6
8
10
12

·Refer to page: 834

Double Y (with R)/ GWWY□-□



Compatible tube O.D. ø
4
6

·Refer to page: 834

Tetrapod/ GWTR□-0



Compatible tube O.D. ø
4
6
8
10
12

·Refer to page: 834

FY/ GWFY□-0



Compatible tube O.D. ø
4
6
8
10
12

·Refer to page: 834

Double Y/ GWWY□-0



Compatible tube O.D. ø
6/4
8/6

·Refer to page: 835

Blanking plug/ GWP□-B



Fitting port size ø
4
6
8
10
12
16

·Refer to page: 835

L-plug/ GWP□-L



Compatible tube O.D. ø
4
6
8
10
12

·Refer to page: 835

C-plug/ GWP□-C



Compatible tube O.D. ø
4
6
8
10
12

·Refer to page: 835

Y type plug/ GWP□-Y



Compatible tube O.D. ø
4
6
8
10
12

·Refer to page: 836

Cap/ GWC□



Compatible tube O.D. ø
4
6
8
10
12

·Refer to page: 836

Manifold (single/with R)/ GWMF□-□



Compatible tube O.D. ø
4/6
4/8
6/8
6/10
8/10

·Refer to page: 836

Manifold (single)/ GWMF□-0



Compatible tube O.D. ø
4/6
4/8
6/8
6/10
8/10

·Refer to page: 836

Manifold (double/with R)/ GWMF□-□-W



Compatible tube O.D. ø
4/8
6/10
8/12

·Refer to page: 837

Manifold (double)/ GWMF□-0-W



Compatible tube O.D. ø
4/8
6/10
8/12

·Refer to page: 837

Insert ring
Made-to-order product



Compatible tube O.D. ø
4
6
8
10
12

·Refer to page: 837

● Sales unit is 10 pcs./bag.

GW Fitting

Port size M3 to 1/2 (Rc or R)

Work environment and device-friendly flame-resistant white body

Fitting series for greatly reducing piping space

1. Push-in fitting for pneumatic piping.
2. Compact size for space saving.
3. V-shaped packing seal to realize smooth insertion and accurate sealing.
   Smooth insertion and secure sealing.
4. Freely rotating elbow union to make piping and removal work easier.
5. White body blends into the working environment. Electroless nickeling used for copper alloy sections.
6. Flame-resistant resin (equivalent to UL94 Standards V-0) used for GW Series body and push ring.

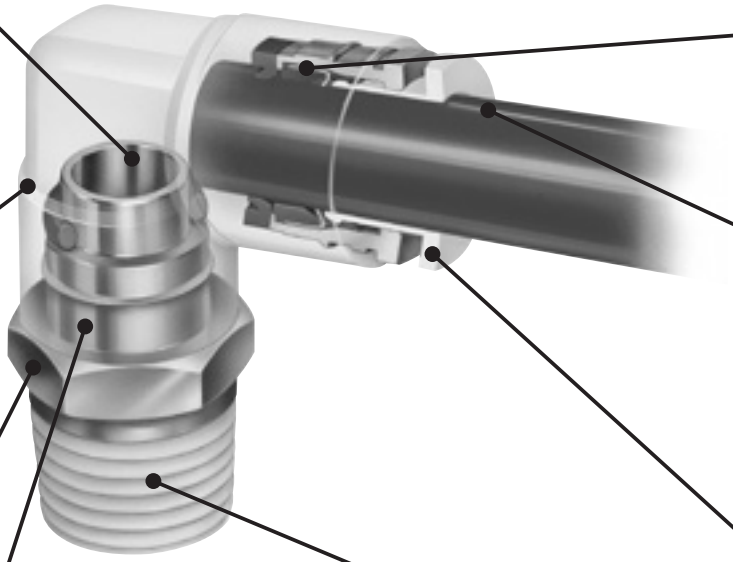

Full flow up to the bore size

· There are no sections narrower than the bore size.
· A flow equivalent to the bore size can be run.

White flame-resistant resin (GW Series) used

· White body blends into the work environment.
· Flame-resistant PBT (equivalent to UL94 standards V-0) is provided as standard.

Electroless nickeling used for copper alloy sections

· Electroless nickeling is used as standard for all copper alloy parts to improve corrosion resistance and appearance.

Easy piping work

· The section of the pipe connected with the body rotates freely, so the piping removal direction can be set freely.

Accurate tube holding

· The chuck bracket acts in the direction in which the tube is dislocated. Ensuring highly reliable retention.

Push-in installation

· The tube can be connected to the pipe fitting by pushing the tube in.
· V-shaped packing is used for the seal between the tube and fitting. The tube can be inserted with lamp force while obtaining a sure seal.

Easy tube removal

· The push ring evenly pushes and opens the chuck, enabling the tube to be completely released from the chuck and removed smoothly.

Sealant applied on thread part as standard

· Teflon resin is coated on the thread part.
· Sealing tape is not needed, reducing work hours.
· An even seal is created and there is no need to worry about leakage, etc.

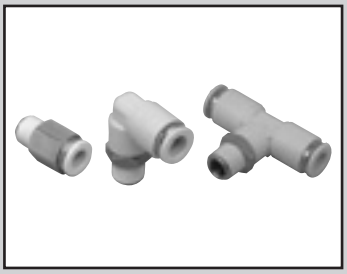

Fitting

GW Series

- Port size: M 3 to R1/2, ø4 to ø12
- Compatible tube O.D.: ø3.2 to ø12

RoHS

Specifications

Descriptions	GW
Working fluid	Compressed air
Max. working pressure MPa	1.0
Negative pressure KPa	−100 *2
Ambient temperature °C	−10 to 60(no freezing)
Tube used	Soft nylon tube (F-15*)
	Urethane tube (U-95*,NU-*) *1

*1: Refer to page 902 for tube dimensions, ambient temperature and working pressure.
*2: Use a urethane tube (U-95**/NU-**) together with an insert ring at vacuum pressure.

Ozone-proof specifications (Ending Page 9)

GW .....- P11

Clean-room specifications (Catalog No.CB-033S)

GW .....- P7*

GW .....- P80

How to order

* Refer to the model No. on the dimensions page (pages 828 to 837) for the model No. combination.

GW L 6 - 8 - 45 - ( )
A B C D E

A Shape	
S	Straight
L	Elbow
T	Tee
TR	Tetrapod
Y	Y tee
FY	FY
WY	Double Y
CR	Cross
P	Plug
C	Cap
M	For tightening fitting
MF	Manifold

B Compatible tube O.D.	
3	ø3.2
4	ø4
6	ø6
8	ø8
10	ø10
12	ø12
16	ø16
44	ø4/ø4
46	ø4/ø6
48	ø4/ø8
64	ø6/ø4
66	ø6/ø6
68	ø6/ø8
610	ø6/ø10
86	ø8/ø6
88	ø8/ø8
810	ø8/ø10
812	ø8/ø12
108	ø10/ø8
1010	ø10/ø10
1012	ø10/ø12
1210	ø12/ø10
1212	ø12/ø12

C Port size	
M3	M 3 x 0.5
M5	M 5 x 0.8
6	R 1/8
8	R 1/4
10	R 3/8
15	R 1/2
0	No thread
4P	Plug for ø4
6P	Plug for ø6
8P	Plug for ø8
10P	Plug for ø10
12P	Plug for ø12
B	Blanking plug
C	C-plug
L	L-plug
Y	Y-plug

D Other combinations	
L	Long
T	Turn
D	D type
X	Bulkhead
S	Round
M	Female
E	Bulkhead female
W	Double
2T	2-port turn
45	Single 45°

Note: Sales unit is 10 pcs./bag.

E Option	
Blank	No
P6	Copper and PTFE free specifications

Internal structure and parts list

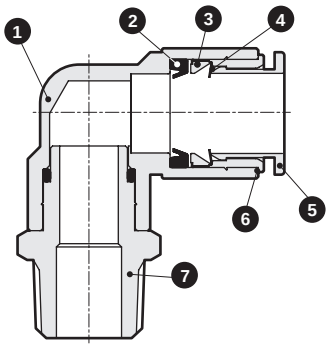

Part No.	Part name	Material
1	Body *1	Brass (electroless nickeling treatment)
		Polybutylene terephthalate (Flame-resistant resin *2)
2	Packing	Nitrile rubber
3	Chuck holder	polyether sulfone
4	Chuck	Stainless steel
5	Push ring *3	Polybutylene terephthalate (flame-resistant resin *2)
6	Outer ring	Brass(electroless nickeling treatment)
7	Drive-in nipple	Brass(electroless nickeling treatment)

*1: Body is copper alloy (electroless nickel plated) for single straight, single straight (round), female straight, female bulkhead, bulkhead and bulkhead female connector.
*2: UL94 standard V0 equivalent
*3: The push ring color is standard: white, ozone-proof specifications P11: blue, clean-room specifications P70: pink, P74: orange, P80: blue. (When flame retardant is added, the hue will be lighter.)

Dimensions: Single straight/single straight (round)/female straight/bulkhead female

CAD

[Sales unit is 10 pcs./bag]

Single straight

● GWS□-□

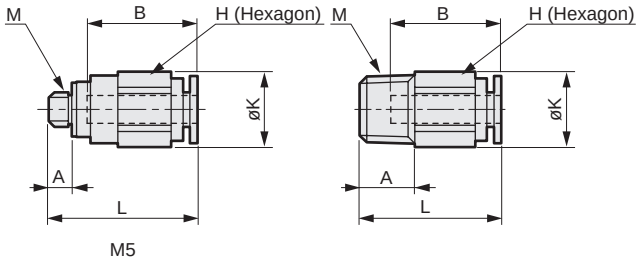

M5

Model No.	Tube O.D. ø	M	H	K	L	A	B	Min. bore size	Eff. X-sectional area mm²	Wt. g
GWS 4-M5	4	M5x0.8	10	11	21.5	3.4	16	2.5	4	6
GWS 4- 6		R1/8	10	11	20.5	8	16	2.5	4	8
GWS 4- 8		R1/4	14	15.8	19.5	11	16	2.5	4	15
GWS 6-M5	6	M5x0.8	12	13.5	23	3.4	17.5	2.5	4.4	9
GWS 6- 6		R1/8	12	13.5	23	8	17.5	4	10.3	11
GWS 6- 8		R1/4	14	15.8	23.5	11	17.5	4	10.3	18
GWS 6-10		R3/8	17	19.1	21.5	12	17.5	4	10.3	26
GWS 8- 6	8	R1/8	14	15.8	28	8	19	5	17.5	18
GWS 8- 8		R1/4	14	15.8	27	11	19	6	22.4	17
GWS 8-10		R3/8	17	19.1	22.5	12	19	6	22.4	24
GWS10- 6	10	R1/8	17	19.1	31	8	21.5	5	17.5	26
GWS10- 8		R1/4	17	19.1	32.5	11	21.5	8	30.5	22
GWS10-10		R3/8	17	19.1	28.5	12	21.5	8	30.5	26
GWS10-15		R1/2	22	24	26.5	15	21.5	8	30.5	49
GWS12- 8	12	R1/4	19	21.4	35.5	11	23	8	35.5	37
GWS12-10		R3/8	19	21.4	30.5	12	23	10	40	32
GWS12-15		R1/2	22	24	29.5	15	23	10	40	51
GWS16-10	16	R3/8	24	26.5	42	12	28	12	90	60
GWS16-15		R1/2	24	26.5	37.5	15	28	13	90	66

Single straight (round)

● GWS□-□-S

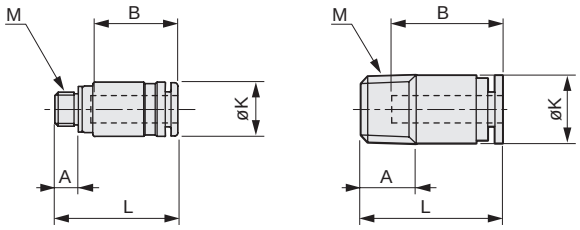

M3, M5

Model No.	Tube O.D. ø	M	K	L	A	B	Hex head hole diameter	Eff. X-sectional area mm²	Wt. g
GWS 3-M3-S	3.2	M3x0.5	6.9	15.7	2.4	11.7	1.5	1.4	1.5
GWS 3-M5-S		M5x0.8	6.9	16.7	3.4	11.7	2	2.7	2.5
GWS 4-M3-S	4	M3x0.5	7.9	16.9	2.4	12.9	1.5	1.6	2.5
GWS 4-M5-S		M5x0.8	7.9	17.9	3.4	12.9	2	2.7	3
GWS 4- 6-S		R1/8	9.8	20.5	8	16	2.5	4.1	8
GWS 6-M5-S	6	M5x0.8	9.9	19.2	3.4	14.2	2.5	4.4	4
GWS 6- 6-S		R1/8	11.8	23	8	17.5	4	10.6	9
GWS 6- 8-S		R1/4	13.8	23	11	17.5	4	10.6	15
GWS 8- 6-S	8	R1/8	14	28	8	19	5	20.4	15
GWS 8- 8-S		R1/4	14	27	11	19	6	22	15
GWS 8-10-S		R3/8	17	22.5	12	19	6	22	21
GWS10- 6-S	10	R1/8	17.5	30.5	8	21.5	5	20.1	26
GWS10- 8-S		R1/4	17.5	28.5	11	21.5	6	26.3	21
GWS10-10-S		R3/8	17.5	28.5	12	21.5	8	30.1	27
GWS10-15-S		R1/2	22	26.5	15	21.5	8	30.1	46
GWS12- 8-S	12	R1/4	19.5	34	11	23	6	26.3	33
GWS12-10-S		R3/8	19.5	29.5	12	23	8	37.9	28
GWS12-15-S		R1/2	22	28.5	15	23	8	37.9	47

Female straight

● GWS□-□-M

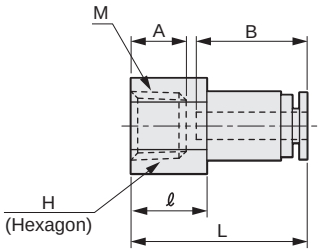

Model No.	Tube O.D. ø	M	H	L	ℓ	A	B	Min. bore size	Eff. X-sectional area mm²	Wt. g
GWS 4- 6-M	4	Rc1/8	12	25.5	11	8	16	2.5	4	9
GWS 4- 8-M		Rc1/4	17	28.5	14	11	16	2.5	4	23
GWS 6- 6-M	6	Rc1/8	14	27	11	8	17.5	4	10.3	16
GWS 6- 8-M		Rc1/4	17	30	14	11	17.5	4	10.3	24
GWS 6-10-M		Rc3/8	19	31	15	12	17.5	4	10.3	25
GWS 8- 6-M	8	Rc1/8	17	28.5	11	8	19	6	22.4	26
GWS 8- 8-M		Rc1/4	17	31.5	14	11	19	6	22.4	27
GWS 8-10-M		Rc3/8	19	32.5	15	12	19	6	22.4	29
GWS10- 8-M	10	Rc1/4	19	34.5	14	11	21.5	8	30.5	42
GWS10-10-M		Rc3/8	19	35.5	15	12	21.5	8	30.5	35
GWS12- 8-M	12	Rc1/4	22	36	14	11	23	10	35.5	57
GWS12-10-M		Rc3/8	22	37	15	12	23	10	35.5	53
GWS12-15-M		Rc1/2	24	40	18	15	23	10	35.5	56

Bulkhead female

● GWS□-□-E

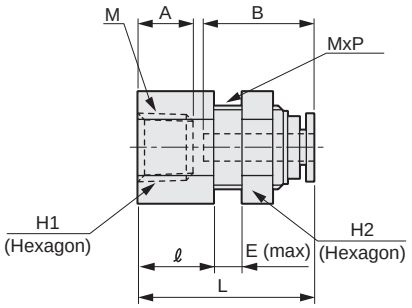

Model No.	Tube O.D. ø	M	H_1	H_2	L	ℓ	A	B	E	MxP	Mounting hole⌀	Min. bore size	Eff. X-sectional area mm²	Wt. g
GWS 4- 6-E	4	Rc1/8	14	14	25.5	11	8	16	5	M12x1	13	2.5	4	21
GWS 4- 8-E		Rc1/4	17	14	28.5	14	11	16	5	M12x1	13	2.5	4	28
GWS 6- 6-E	6	Rc1/8	17	17	27	11	8	17.5	5	M14x1	15	4	10.3	33
GWS 6- 8-E		Rc1/4	17	17	30	14	11	17.5	5	M14x1	15	4	10.3	33
GWS 6-10-E		Rc3/8	19	17	31.5	15	12	17.5	5	M14x1	15	4	10.3	35
GWS 8- 6-E	8	Rc1/8	19	19	28.5	11	8	19	6	M16x1	17	6	22.4	42
GWS 8- 8-E		Rc1/4	19	19	31.5	14	11	19	6	M16x1	17	6	22.4	56
GWS 8-10-E		Rc3/8	19	19	32.5	15	12	19	6	M16x1	17	6	22.4	38
GWS10- 8-E	10	Rc1/4	22	23	34.5	14	11	21.5	9	M20x1	21	8	30.5	73
GWS10-10-E		Rc3/8	22	23	35.5	15	12	21.5	9	M20x1	21	8	30.5	68
GWS12-10-E	12	Rc3/8	24	26	37.5	15	12	23	10	M22x1	23	9	35.5	88
GWS12-15-E		Rc1/2	24	26	40.5	18	15	23	10	M22x1	23	9	35.5	82

Dimensions: Bulkhead/bulkhead female connector/straight/different diameter straight

[Sales unit is 10 pcs./bag]

Bulkhead
● GWS□-□-X

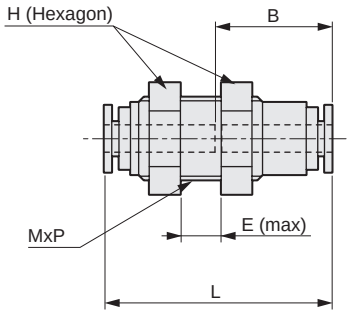

Model No.	Tube O.D. ø	H	L	B	E	MxP	Mounting holeø	Min. bore size	Eff. X-sectional area mm²	Wt. g
GWS 4-0-X	4	14	33	16	7.5	M12x1	13	2.5	4	20
GWS 6-0-X	6	17	36	17.5	9.5	M14x1	15	4	10	33
GWS 8-0-X	8	19	39	19	12.5	M16x1	17	6	22	42
GWS10-0-X	10	23	44.5	21.5	18	M20x1	21	8	30	75
GWS12-0-X	12	26	47	23	20.5	M22x1	23	9	35	92

Straight
● GWS□-0

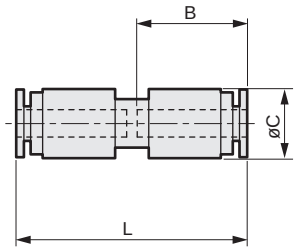

Model No.	Tube O.D. ø	L	B	C	Min. bore size	Eff. X-sectional area mm²	Wt. g
GWS 4-0	4	33.5	16	10	2.5	4	4
GWS 6-0	6	36.5	17.5	12.5	4	10	6
GWS 8-0	8	39.5	19	14.5	6	22	8
GWS10-0	10	45	21.5	17.5	8	30	13
GWS12-0	12	47.5	23	20	10	35	17
GWS16-0	16	58	28	26.5	13.2	90	38

Bulkhead female connector
● GWM□-□-X

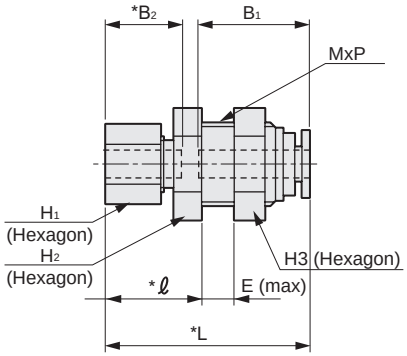

Note: An insert ring (MJU) is required for urethane tube on tightening fitting side.
* dimensions show rough dimensions before fixing nut.

Model No.	Tube O.D. ø	H1	H2	H3	L	ℓ	B1	B2	E	MxP	Mounting holeø	Min. bore size	Eff. X-sectional area mm²	Wt. g
GWM 4-0-X	4	10	14	14	29.5	15	16	11	5	M12x1	13	2.5	4	21
GWM 6-0-X	6	12	17	17	33	16	17.5	11.5	5	M14x1	15	4	10	31
GWM 8-0-X	8	14	19	19	35	17.5	19	13	6	M16x1	17	6	22	41
GWM10-0-X	10	17	22	23	40	19.5	21.5	14.5	9	M20x1	21	8	30	68
GWM12-0-X	12	19	24	26	43.5	21	23	16	10	M22x1	23	9	35	85

Different diameter straight
● GWS□-0

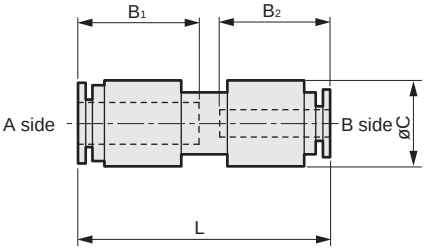

Model No.	Tube O.D. ø		L	B1	B2	C	Min. bore size	Eff. X-sectional area mm²	Wt. g
	A side	B side							
GWS 46-0	6	4	36.5	17.5	16	12.5	2.5	4	6
GWS 68-0	8	6	39.5	19	17.5	14.5	4	10	8
GWS 810-0	10	8	45	21.5	19	17.5	6	22	12
GWS1012-0	12	10	47.5	23	21.5	20	8	30	17

Dimensions: Plug reducer/plug/plug reducer/single elbow

[Sales unit is 10 pcs./bag]

Plug reducer

● GWS□-□P

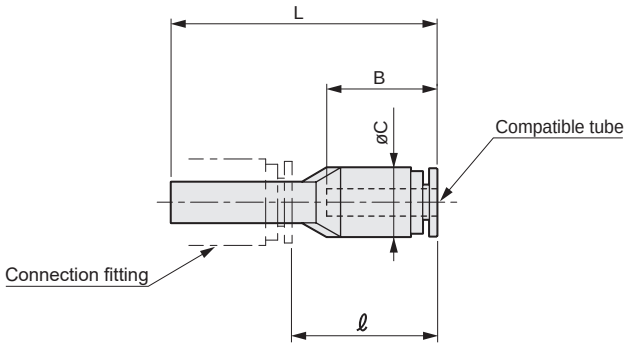

Model No.	Tube O.D. ø	Fitting port size ø	L	ℓ*	B	C	Min. bore size	Eff. X-sectional area mm²	Wt. g
GWS 4- 6P	4	6	38.5	21	16	10	2.3	3.5	3
GWS 6- 4P	6	4	42	26	17.5	12.5	2.3	3.5	4
GWS 6- 8P		8	41	22	17.5	12.5	4	10	4
GWS 6-10P		10	42	20	17.5	12.5	4	10	5
GWS 8-10P	8	10	44.5	22.5	19	14.5	6	22	6
GWS 8-12P		12	44	21	19	14.5	6	22	7
GWS10-12P	10	12	48	25	21.5	17.5	8	30	9

* For connection fitting, dimensions of CKD (GW Series) are shown.

Plug

● GWP□-0

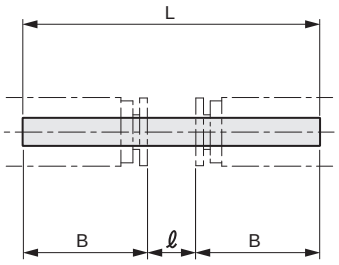

Material: Polyamide resin

Model No.	Fitting port size ø	L	B*	ℓ*	Min. bore size	Eff. X-sectional area mm²	Wt. g
GWP 4-0	4	43	16	11	2.5	4	0.5
GWP 6-0	6	43	17.5	8	4	10.3	1
GWP 8-0	8	47	19	9	6	22.4	1.5
GWP10-0	10	56	21.5	13	7.5	30	2.5
GWP12-0	12	61	23	15	9.2	35.5	3.5

* For connection fitting, dimensions of CKD (GW Series) are shown.

Plug reducer

● GWP□-0

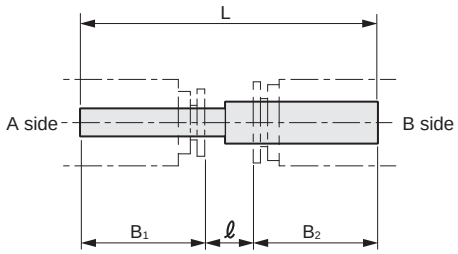

Material: Polyamide resin

Model No.	Fitting port size ø		L	ℓ*	B1*	B2*	Min. bore size	Eff. X-sectional area mm²	Wt. g
	A side	B side							
GWP 46-0	4	6	43	9.5	16	17.5	2.3	4	0.8
GWP 68-0	6	8	45	8.5	17.5	19	4	10.3	1
GWP 810-0	8	10	50.5	10	19	21.5	6	22.4	2
GWP1012-0	10	12	58	13.5	21.5	23	7.5	30	3

* For connection fitting, dimensions of CKD (GW Series) are shown.

Single elbow

● GWL□-□

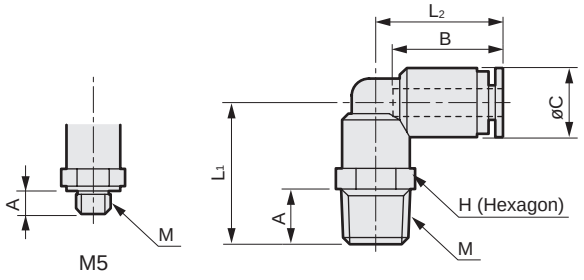

Model No.	Tube O.D. ø	M	H	L1	L2	A	B	C	Min. bore size	Eff. X-sectional area mm²	Wt. g
GWL 4-M5	4	M5x0.8	8	15	18	3.4	16	10	2.5	3.2	5
GWL 4- 6		R1/8	10	20.5	18.5	8	16	10	2.5	3.2	8
GWL 4- 8		R1/4	14	24	18.5	11	16	10	2.5	3.2	15
GWL 6-M5	6	M5x0.8	10	15	20	3.4	17.5	12.5	2.5	4.2	7
GWL 6- 6		R1/8	12	24	21	8	17.5	12.5	4	8	13
GWL 6- 8		R1/4	14	27.5	21	11	17.5	12.5	4	8	18
GWL 6-10		R3/8	17	29	21	12	17.5	12.5	4	8	26
GWL 8- 6	8	R1/8	14	25.5	23.5	8	19	14.5	6	18	17
GWL 8- 8		R1/4	14	28.5	23.5	11	19	14.5	6	18	20
GWL 8-10		R3/8	17	30	23.5	12	19	14.5	6	18	28
GWL10- 6	10	R1/8	17	28	27	8	21.5	17.5	6.5	24.3	26
GWL10- 8		R1/4	17	31	27	11	21.5	17.5	8	27	28
GWL10-10		R3/8	17	32.5	27	12	21.5	17.5	8	27	33
GWL10-15		R1/2	22	35.5	27	15	21.5	17.5	8	27	49
GWL12- 8	12	R1/4	19	33	29.5	11	23	20	8.5	33	37
GWL12-10		R3/8	19	34.5	29.5	12	23	20	9	35	43
GWL12-15		R1/2	22	37.5	29.5	15	23	20	9	35.5	56
GWL16-10	16	R3/8	22	41	35.5	12	28	26.5	12	80	63
GWL16-15		R1/2	22	44	35.5	15	28	26.5	12	80	76

Dimensions: Long elbow/single 45° elbow/turn elbow/elbow

[Sales unit is 10 pcs./bag]

Long elbow
● GWL□-□-L

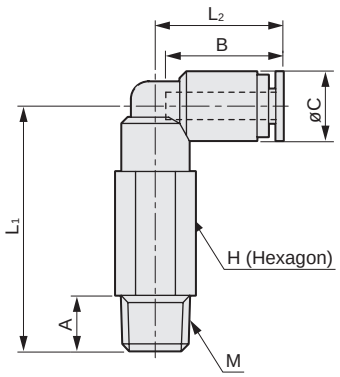

Model No.	Tube O.D. ø	M	H	L_1	L_2	A	B	C	Min. bore size	Eff. X-sectional area mm²	Wt. g
GWL 4- 6-L	4	R1/8	10	35.5	18.5	8	16	10	2.5	3.2	15
GWL 4- 8-L		R1/4	14	39	18.5	11	16	10	2.5	3.2	24
GWL 6- 6-L	6	R1/8	12	40	21	8	17.5	12.5	4	8	26
GWL 6- 8-L		R1/4	14	43.5	21	11	17.5	12.5	4	8	34
GWL 8- 6-L	8	R1/8	14	44.5	23.5	8	19	14.5	6	18	39
GWL 8- 8-L		R1/4	14	47.5	23.5	11	19	14.5	6	18	39
GWL 8-10-L		R3/8	17	49	23.5	12	19	14.5	6	18	56
GWL10- 8-L	10	R1/4	17	56	27	11	21.5	17.5	8	27	69
GWL10-10-L		R3/8	17	57.5	27	12	21.5	17.5	8	27	70
GWL10-15-L		R1/2	22	60.5	27	15	21.5	17.5	8	27	109
GWL12- 8-L	12	R1/4	19	60	29.5	11	23	20	8.5	33	94
GWL12-10-L		R3/8	19	61.5	29.5	12	23	20	9	34.5	95
GWL12-15-L		R1/2	22	64.5	29.5	15	23	20	9	34.5	122

Single 45° elbow
● GWL□-□-45

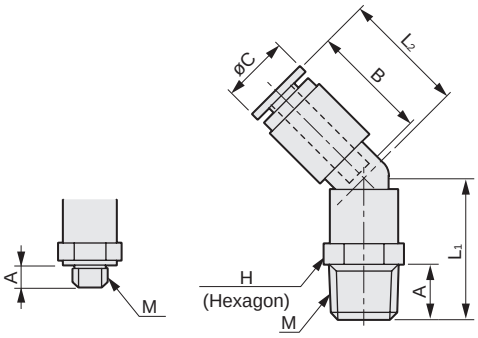

Model No.	Tube O.D. ø	M	H	L_1	L_2	A	B	C	Min. bore size	Eff. X-sectional area mm²	Wt. g
GWL 4-M5-45	4	M5x0.8	8	14.5	18	3.4	16	10	2.5	3.6	5
GWL 4- 6-45		R1/8	10	20.5	18	8	16	10	2.5	3.6	8
GWL 4- 8-45		R1/4	14	24	18	11	16	10	2.5	3.6	15
GWL 6-M5-45	6	M5x0.8	10	15	18.5	3.4	17.5	12.5	2.5	4.3	6
GWL 6- 6-45		R1/8	12	23.5	20	8	17.5	12.5	4	9.2	12
GWL 6- 8-45		R1/4	14	27	20	11	17.5	12.5	4	9.2	17
GWL 6-10-45		R3/8	17	28.5	20	12	17.5	12.5	4	9.2	26
GWL 8- 6-45	8	R1/8	14	25	22	8	19	14.5	6	20	16
GWL 8- 8-45		R1/4	14	28	22	11	19	14.5	6	20	19
GWL 8-10-45		R3/8	17	29.5	22	12	19	14.5	6	20	28
GWL10- 6-45	10	R1/8	17	26	25	8	21.5	17.5	6.5	25.5	25
GWL10- 8-45		R1/4	17	29	25	11	21.5	17.5	8	29	26
GWL10-10-45		R3/8	17	30.5	25	12	21.5	17.5	8	29	31
GWL10-15-45		R1/2	22	33.5	25	15	21.5	17.5	8	29	47
GWL12- 8-45	12	R1/4	19	30.5	27	11	23	20	8.5	35.5	35
GWL12-10-45		R3/8	19	32	27	12	23	20	9	39	41
GWL12-15-45		R1/2	22	35	27	15	23	20	9	39	55

Turn elbow
● GWL□-□-T

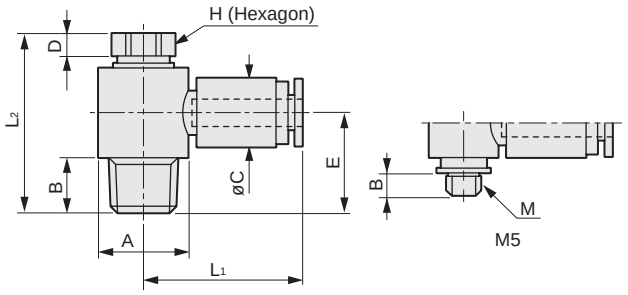

Model No.	Tube O.D. ø	M	H	L_1	L_2	A	B	C	D	E	Eff. X-sectional area mm²	Wt. g
GWL 4-M5-T	4	M5x0.8	8	21.5	18.5	10	3.4	10	3	10.5	2.8	6
GWL 4- 6-T		R1/8	8	23	26	13	8	10	3	15	3.7	13
GWL 4- 8-T		R1/4	10	24	30	15	11	10	3.5	18	3.7	24
GWL 6-M5-T	6	M5x0.8	8	22.5	18.5	10	3.4	12.5	3	10.5	3.4	8
GWL 6- 6-T		R1/8	8	24	26	13	8	12.5	3	15	7.5	14
GWL 6- 8-T		R1/4	10	25	30	15	11	12.5	3.5	18	8	25
GWL 6-10-T		R3/8	14	27.5	36.5	20	12	12.5	4	21.5	9	45
GWL 8- 6-T	8	R1/8	10	26.5	29	15	8	14.5	4	16	16.5	20
GWL 8- 8-T		R1/4	12	28	32	17.6	11	14.5	4	19	17	31
GWL 8-10-T		R3/8	14	29	36.5	20	12	14.5	4	21.5	19	46
GWL10- 8-T	10	R1/4	14	31.5	35.5	20	11	17.5	4	20.5	24	42
GWL10-10-T		R3/8	14	31.5	36.5	20	12	17.5	4	21.5	24	49
GWL10-15-T		R1/2	17	34	42.5	25	15	17.5	4	25.7	27	82
GWL12- 8-T	12	R1/4	17	35.5	38.5	25	11	20	4	21.7	32	66
GWL12-10-T		R3/8	17	35.5	39.5	25	12	20	4	22.7	32	68
GWL12-15-T		R1/2	17	35.5	42.5	25	15	20	4	25.7	32	84

Elbow
● GWL□-0

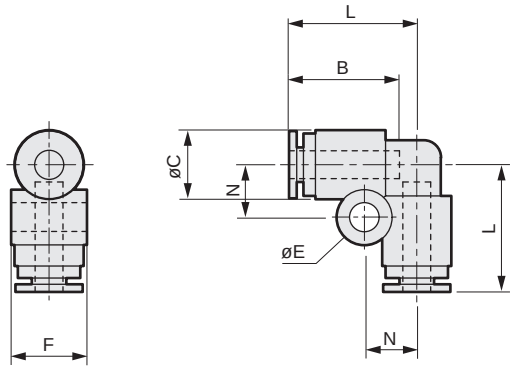

Model No.	Tube O.D. ø	L	B	C	N	E	F	Min. bore size	Eff. X-sectional area mm²	Wt. g
GWL 4-0	4	18.5	16	10	7.5	4.2	11	2.5	3	5
GWL 6-0	6	21	17.5	12.5	8.5	4.2	13.5	4	7.5	7
GWL 8-0	8	23.5	19	14.5	9.5	4.2	15.5	6	17	9
GWL10-0	10	27	21.5	17.5	11	4.2	18.5	8	25.5	15
GWL12-0	12	29.5	23	20	12	4.2	21	10	34	18
GWL16-0	16	37	28	26.5	12.5	4.2	28	13.2	80	42

Dimensions: Double tee/D tee/tee/Y tee

CAD

[Sales unit is 10 pcs./bag]

Double tee

● GWT□-□

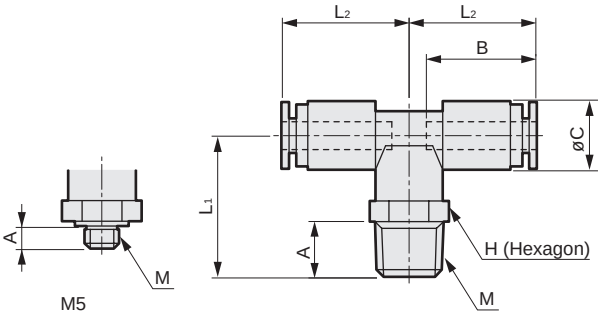

Model No.	Tube O.D. ø	M	H	L_1	L_2	A	B	C	Min. bore size	Eff. X-sectional area mm²	Wt. g
GWT 4-M5	4	M5x0.8	10	16.5	18.5	3.4	16	10	2.5	4.3	8
GWT 4- 6		R1/8	10	20.5	18.5	8	16	10	2.5	4.3	10
GWT 4- 8		R1/4	14	24	18.5	11	16	10	2.5	4.3	17
GWT 6-M5	6	M5x0.8	12	20	21	3.4	17.5	12.5	2.5	4.3	13
GWT 6- 6		R1/8	12	24	21	8	17.5	12.5	4	10.5	16
GWT 6- 8		R1/4	14	27.5	21	11	17.5	12.5	4	10.5	21
GWT 6-10		R3/8	17	29	21	12	17.5	12.5	4	10.5	29
GWT 8- 6	8	R1/8	14	25.5	23.5	8	19	14.5	6	23.5	20
GWT 8- 8		R1/4	14	28.5	23.5	11	19	14.5	6	23.5	24
GWT 8-10		R3/8	17	30	23.5	12	19	14.5	6	23.5	32
GWT10- 8	10	R1/4	17	31	27	11	21.5	17.5	8	33.5	34
GWT10-10		R3/8	17	32.5	27	12	21.5	17.5	8	33.5	39
GWT10-15		R1/2	22	35.5	27	15	21.5	17.5	8	33.5	55
GWT12- 8	12	R1/4	19	33	29.5	11	23	20	8.5	37	45
GWT12-10		R3/8	19	34.5	29.5	12	23	20	9	41	51
GWT12-15		R1/2	22	37.5	29.5	15	23	20	9	41	64

D tee

● GWT□-□-D

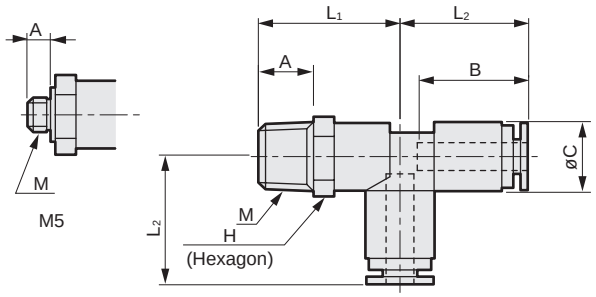

Model No.	Tube O.D. ø	M	H	L_1	L_2	A	B	C	Min. bore size	Eff. X-sectional area mm²	Wt. g
GWT 4-M5-D	4	M5x0.8	10	16.5	18.5	3.4	16	10	2.5	4.3	8
GWT 4- 6-D		R1/8	10	20.5	18.5	8	16	10	2.5	4.3	10
GWT 4- 8-D		R1/4	14	24	18.5	11	16	10	2.5	4.3	17
GWT 6-M5-D	6	M5x0.8	12	19.5	21	3.4	17.5	12.5	2.5	4.3	13
GWT 6- 6-D		R1/8	12	24	21	8	17.5	12.5	4	10.5	16
GWT 6- 8-D		R1/4	14	27.5	21	11	17.5	12.5	4	10.5	21
GWT 6-10-D		R3/8	17	29	21	12	17.5	12.5	4	10.5	29
GWT 8- 6-D	8	R1/8	14	25.5	23.5	8	19	14.5	6	23.5	20
GWT 8- 8-D		R1/4	14	28.5	23.5	11	19	14.5	6	23.5	24
GWT 8-10-D		R3/8	17	30	23.5	12	19	14.5	6	23.5	32
GWT10- 8-D	10	R1/4	17	31	27	11	21.5	17.5	8	33.5	34
GWT10-10-D		R3/8	17	32.5	27	12	21.5	17.5	8	33.5	39
GWT10-15-D		R1/2	22	35.5	27	15	21.5	17.5	8	33.5	55
GWT12- 8-D	12	R1/4	19	33	29.5	11	23	20	8.5	37	45
GWT12-10-D		R3/8	19	34.5	29.5	12	23	20	9	41	51
GWT12-15-D		R1/2	22	37.5	29.5	15	23	20	9	41	64

Tee

● GWT□-0

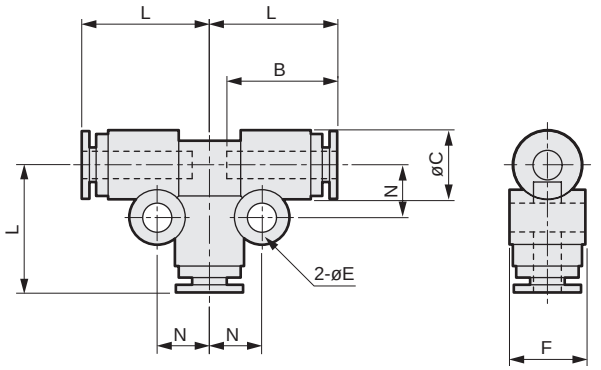

Model No.	Tube O.D. ø	L	B	C	E	F	N	Min. bore size	Eff. X-sectional area mm²	Wt. g
GWT 4-0	4	18.5	16	10	4.2	11	7.5	2.5	3.6	8
GWT 6-0	6	21	17.5	12.5	4.2	13.5	8.5	4	9.7	11
GWT 8-0	8	23.5	19	14.5	4.2	15.5	9.5	6	22	14
GWT10-0	10	27	21.5	17.5	4.2	18.5	11	8	30	23
GWT12-0	12	29.5	23	20	4.2	21	12	10	35.5	30

Y tee

● GWY□-0

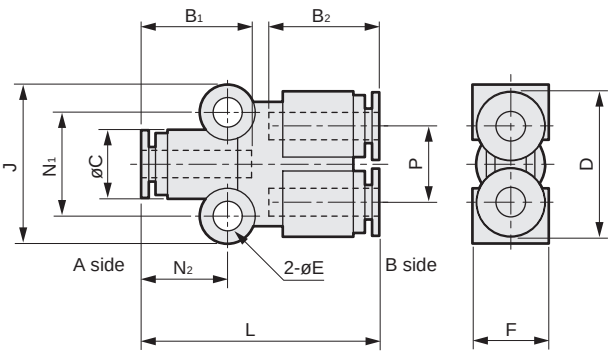

Model No.	Tube O.D. ø A side	Tube O.D. ø B side	L	B_1	B_2	C	D	E	F	J	N_1	N_2	P	Eff. X-sectional area mm²	Wt. g
GWY 44-0	4	4	34.5	16	16	10	21	4.2	11	23	15	12.5	11	3.6	8
GWY 66-0	6	6	37.5	17.5	17.5	12.5	26	4.2	13.5	25.5	17.5	14	13.5	10.5	11
GWY 88-0	8	8	40.5	19	19	14.5	30	4.2	15.5	27	19	15	15.5	23	14
GWY1010-0	10	10	48	21.5	21.5	17.5	36	4.2	18.5	30	22	18	18.5	38	23
GWY1212-0	12	12	53	23	23	20	41	4.2	21	32	24	19.5	21	50	30
GWY 64-0	6	4	37.5	17.5	16	12.5	26	4.2	13.5	25.5	17.5	14	13.5	5.4	11
GWY 86-0	8	6	40.5	19	17.5	14.5	30	4.2	15.5	27	19	15	15.5	14.3	16
GWY 108-0	10	8	48	21.5	19	17.5	36	4.2	18.5	30	22	18	18.5	21.1	20
GWY1210-0	12	10	53	23	21.5	20	41	4.2	21	32	24	19.5	21	35.5	30

Dimensions: Double Y tee/cross/2-port turn elbow/tetrapod (with R)

CAD

[Sales unit is 10 pcs./bag]

Double Y tee

● GWY□-□

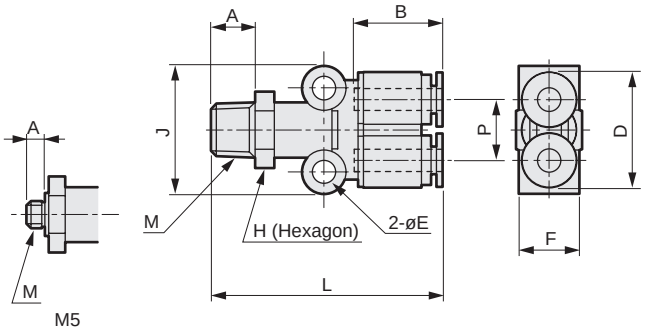

Model No.	Tube O.D. ø	M	H	L	A	B	D	E	F	J	P	Eff. X-sectional area mm²	Wt. g
GWY 4-M5	4	M5x0.8	12	38	3.4	16	21	4.2	11	23	11	4.5	12
GWY 4- 6		R1/8	12	42	8	16	21	4.2	11	23	11	5.5	14
GWY 4- 8		R1/4	14	45.5	11	16	21	4.2	11	23	11	5.5	19
GWY 6-M5	6	M5x0.8	12	41	3.4	17.5	26	4.2	13.5	25.5	13.5	4.5	17
GWY 6- 6		R1/8	14	46	8	17.5	26	4.2	13.5	25.5	13.5	17.5	19
GWY 6- 8		R1/4	14	49	11	17.5	26	4.2	13.5	25.5	13.5	17.5	22
GWY 6-10		R3/8	17	50.5	12	17.5	26	4.2	13.5	25.5	13.5	17.5	31
GWY 8- 6	8	R1/8	17	49	8	19	30	4.2	15.5	27	15.5	25.5	27
GWY 8- 8		R1/4	17	52	11	19	30	4.2	15.5	27	15.5	25.5	29
GWY 8-10		R3/8	17	53.5	12	19	30	4.2	15.5	27	15.5	25.5	34
GWY10- 8	10	R1/4	19	59.5	11	21.5	36	4.2	18.5	30	18.5	35	42
GWY10-10		R3/8	19	61	12	21.5	36	4.2	18.5	30	18.5	38.5	48
GWY10-15		R1/2	22	64	15	21.5	36	4.2	18.5	30	18.5	38	61
GWY12- 8	12	R1/4	22	64.5	11	23	41	4.2	21	32	21	37	51
GWY12-10		R3/8	22	66	12	23	41	4.2	21	32	21	37	57
GWY12-15		R1/2	22	69	15	23	41	4.2	21	32	21	40.5	67

Cross

● GWCR□-0

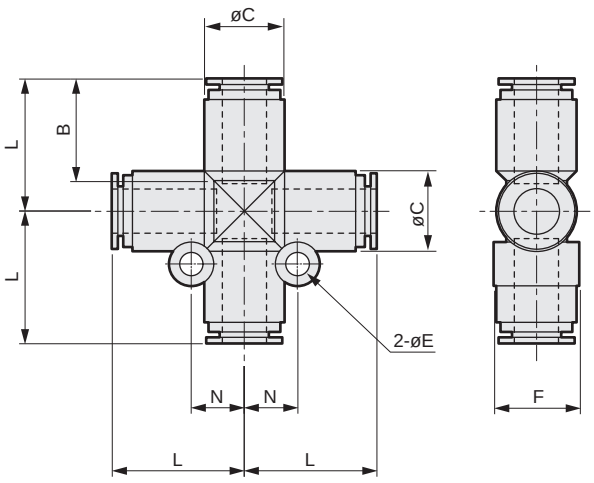

Model No.	Tube O.D. ø	L	B	C	E	F	N	Min. bore size	Eff. X-sectional area mm²	Wt. g
GWCR 8-0	8	24	19	14.5	4.2	15.5	9.5	6	22	19
GWCR10-0	10	27.5	21.5	17.5	4.2	18.5	11	8	30.5	30
GWCR12-0	12	30	23	20	4.2	21	12	10	35.9	39

2-port turn elbow

● GWL□-□-2T

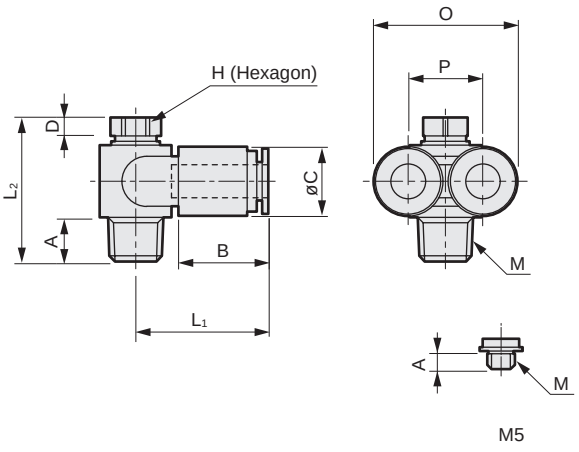

Model No.	Tube O.D. ø	M	H	L₁	L₂	A	B	C	D	O	P	Eff. X-sectional area mm²	Wt. g
GWL 4-M5-2T	4	M5x0.8	8	21.5	18.5	3.4	16	10	3	21	11	3.6	9
GWL 6- 6-2T	6	R1/8	8	24	26	8	17.5	12.5	3	26	13.5	8.5	18
GWL 8- 8-2T	8	R1/4	12	28	32	11	19	14.5	4	30	15.5	19	36
GWL10-10-2T	10	R3/8	14	31.5	36.5	12	21.5	17.5	4	36	18.5	26	54
GWL12-15-2T	12	R1/2	17	35.5	42.5	15	23	20	4	41	21	34	90

Tetrapod (with R)

● GWTR□-□

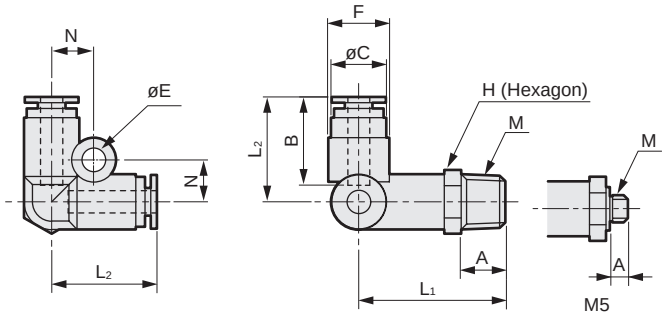

Model No.	Tube O.D. ø	M	H	L₁	L₂	A	B	C	E	F	N	Min. bore size	Eff. X-sectional area mm²	Wt. g
GWTR 4-M5	4	M5x0.8	10	22.5	19	3.4	16	10	4.2	11	7.5	2.5	4.3	11
GWTR 4- 6		R1/8	10	26.5	19	8	16	10	4.2	11	7.5	2.5	4.5	13
GWTR 4- 8		R1/4	14	30	19	11	16	10	4.2	11	7.5	2.5	4.5	20
GWTR 6-M5	6	M5x0.8	14	25	21.5	3.4	17.5	12.5	4.2	13.5	8.5	2.5	4.3	19
GWTR 6- 6		R1/8	14	30	21.5	8	17.5	12.5	4.2	13.5	8.5	4	10.5	22
GWTR 6- 8		R1/4	14	33	21.5	11	17.5	12.5	4.2	13.5	8.5	4	10.5	25
GWTR 6-10		R3/8	17	34.5	21.5	12	17.5	12.5	4.2	13.5	8.5	4	10.5	33
GWTR 8- 6	8	R1/8	17	32.5	24	8	19	14.5	4.2	15.5	9.5	6	23.5	28
GWTR 8- 8		R1/4	17	35.5	24	11	19	14.5	4.2	15.5	9.5	6	23.5	33
GWTR 8-10		R3/8	17	37	24	12	19	14.5	4.2	15.5	9.5	6	23.5	38
GWTR10- 8	10	R1/4	19	39.5	27.5	11	21.5	17.5	4.2	18.5	13	8	35.5	45
GWTR10-10		R3/8	19	41	27.5	12	21.5	17.5	4.2	18.5	13	8	35.5	52
GWTR10-15		R1/2	22	44	27.5	15	21.5	17.5	4.2	18.5	13	8	35.5	65
GWTR12- 8	12	R1/4	22	41.5	30	11	23	20	4.2	21	14	8.5	37.5	60
GWTR12-10		R3/8	22	43	30	12	23	20	4.2	21	14	8.5	37.5	68
GWTR12-15		R1/2	22	46	30	15	23	20	4.2	21	14	8.5	37.5	77

Dimensions: FY (with R)/double Y (with R)/tetrapod/FY

CAD

[Sales unit is 10 pcs./bag]

FY (with R)

● GWFY□-□

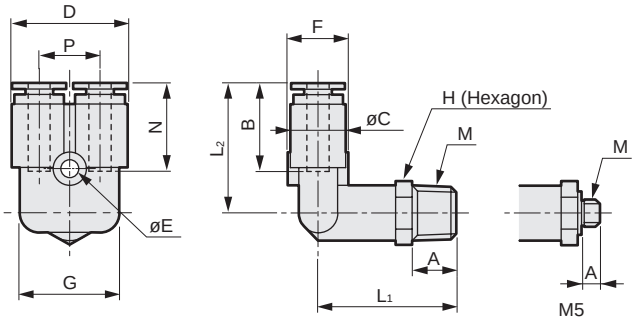

Model No.	Tube O.D. ø	M	H	L1	L2	A	B	C	D	E	F	G	N	P	Min. bore size	Eff. X-sectional area mm²	Wt. g
GWFY 4-M5	4	M5x0.8	10	21	23.5	3.4	16	10	21	3.2	11	18	15.5	11	2.5	4.5	12
GWFY 4- 6		R1/8	10	25	23.5	8	16	10	21	3.2	11	18	15.5	11	2.5	4.6	14
GWFY 4- 8		R1/4	14	28.5	23.5	11	16	10	21	3.2	11	18	15.5	11	2.5	4.6	20
GWFY 6-M5	6	M5x0.8	14	23	27	3.4	17.5	12.5	26	4.2	13.5	22.5	17	13.5	2.5	4.5	21
GWFY 6- 6		R1/8	14	28	27	8	17.5	12.5	26	4.2	13.5	22.5	17	13.5	4	10.5	23
GWFY 6- 8		R1/4	14	31	27	11	17.5	12.5	26	4.2	13.5	22.5	17	13.5	4	10.5	26
GWFY 6-10		R3/8	17	32.5	27	12	17.5	12.5	26	4.2	13.5	22.5	17	13.5	4	10.5	35
GWFY 8- 6	8	R1/8	17	30.5	29	8	19	14.5	30	4.2	15.5	26.5	18	15.5	6	23	30
GWFY 8- 8		R1/4	17	33.5	29	11	19	14.5	30	4.2	15.5	26.5	18	15.5	6	23	34
GWFY 8-10		R3/8	17	35	29	12	19	14.5	30	4.2	15.5	26.5	18	15.5	6	23	39
GWFY10- 8	10	R1/4	19	37.5	33	11	21.5	17.5	36	4.2	18.5	31.5	20	18.5	8	34.4	47
GWFY10-10		R3/8	19	39	33	12	21.5	17.5	36	4.2	18.5	31.5	20	18.5	8	34.4	53
GWFY10-15		R1/2	22	42	33	15	21.5	17.5	36	4.2	18.5	32.5	20	18.5	8	34.4	66
GWFY12- 8	12	R1/4	22	39.5	35.5	11	23	20	41	4.2	21	37	21.5	21	8.5	37.5	63
GWFY12-10		R3/8	22	41	35.5	12	23	20	41	4.2	21	37	21.5	21	8.5	37.5	71
GWFY12-15		R1/2	22	44	35.5	15	23	20	41	4.2	21	37	21.5	21	8.5	37.5	80

Double Y (with R)

● GWWY□-□

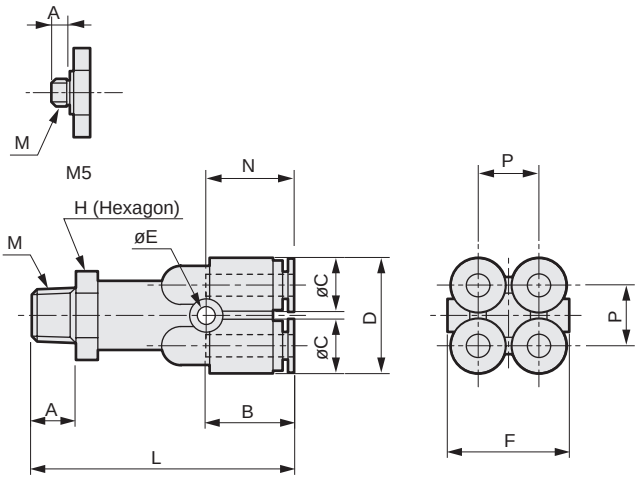

Model No.	Tube O.D. ø	M	H	L	A	B	C	D	E	F	N	P	Eff. X-sectional area mm²	Wt. g
GWWY4-M5	4	M5x0.8	14	42.5	3.4	16	10	21	3.2	22	15.5	11	4.3	23
GWWY4- 6		R1/8	14	47.5	8	16	10	21	3.2	22	15.5	11	9.7	25
GWWY4- 8		R1/4	14	50.5	11	16	10	21	3.2	22	15.5	11	9.7	28
GWWY6-M5	6	M5x0.8	17	46.5	3.4	17.5	12.5	26	3.2	27	17	13.5	4.3	36
GWWY6- 6		R1/8	17	51.5	8	17.5	12.5	26	3.2	27	17	13.5	23	34
GWWY6- 8		R1/4	17	54.5	11	17.5	12.5	26	3.2	27	17	13.5	23	39
GWWY6-10		R3/8	17	56	12	17.5	12.5	26	3.2	27	17	13.5	23	44

Tetrapod

● GWTR□-0

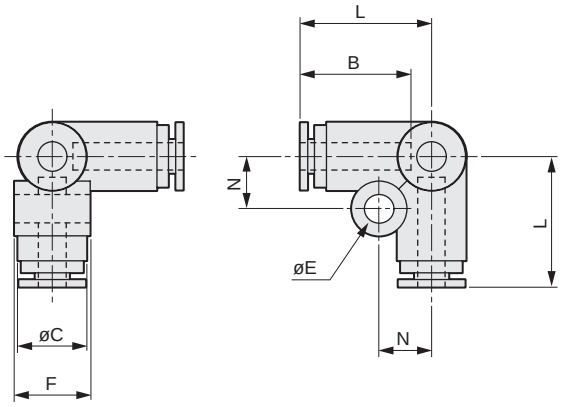

Model No.	Compatible tube O.D. ø	L	B	C	E	F	N	Min. bore size	Eff. X-sectional area mm²	Wt. g
GWTR 4-0	4	19	16	10	4.2	11	7.5	2.5	4	7
GWTR 6-0	6	21.5	17.5	12.5	4.2	13.5	8.5	4	9.5	11
GWTR 8-0	8	24	19	14.5	4.2	15.5	9.5	6	12.5	14
GWTR10-0	10	27.5	21.5	17.5	4.2	18.5	13	8	29.5	24
GWTR12-0	12	30	23	20	4.2	21	14	10	35.5	31

FY

● GWFY□-0

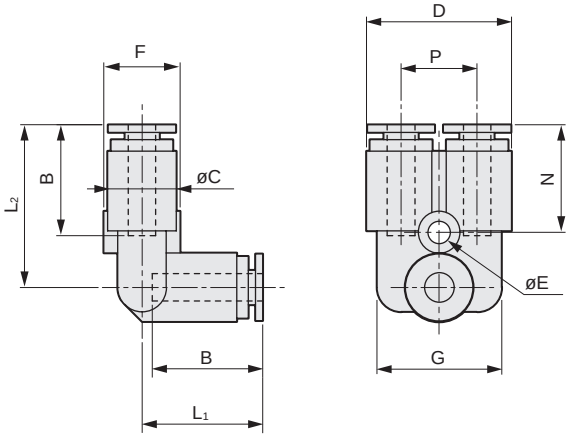

Model No.	Tube O.D. ø	L1	L2	B	C	D	E	F	G	N	P	Min. bore size	Eff. X-sectional area mm²	Wt. g
GWFY 4-0	4	17.5	23.5	16	10	21	3.2	11	18	15.5	11	2.5	4	8
GWFY 6-0	6	19.5	27	17.5	12.5	26	4.2	13.5	22.5	17	13.5	4	10	12
GWFY 8-0	8	22	29	19	14.5	30	4.2	15.5	26.5	18	15.5	6	21	16
GWFY10-0	10	25.5	33	21.5	17.5	36	4.2	18.5	31.5	20	18.5	8	29	25
GWFY12-0	12	28	35.5	23	20	41	4.2	21	37	21.5	21	10	35.5	34

Dimensions: Double Y/blanking plug/L-plug/C-plug

CAD

[Sales unit is 10 pcs./bag]

Double Y

● GWWY□-0

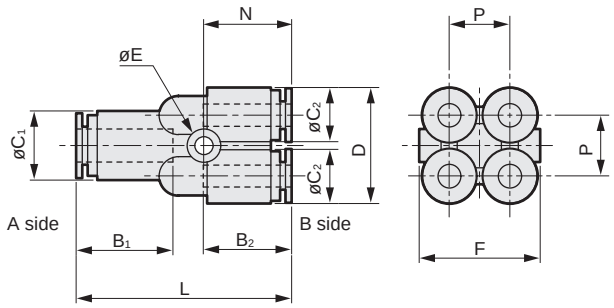

Model No.	Tube O.D. ø		L	B_1	B_2	C_1	C_2	D	E	F	N	P	Eff. X-sectional area mm²	Wt. g
	A side	B side												
GWWY64-0	6	4	39	17.5	16	12.5	10	21	3.2	22	15.5	11	9	14
GWWY86-0	8	6	43	19	17.5	14.5	12.5	26	3.2	27	17	13.5	22	20

Blanking plug

● GWP□-B

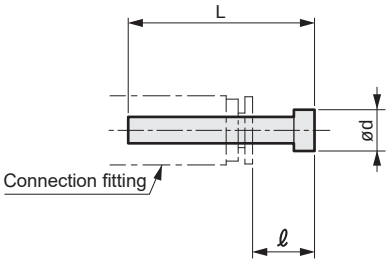

Material: Polyamide resin

Model No.	Fitting port size ø	L	ℓ*	d	Wt. g
GWJP 3-B	3.2	23.5	11.8	5	0.2
GWP 4-B	4	27	11	6	0.5
GWP 6-B	6	29	11.5	8	1
GWP 8-B	8	33	14	10	2
GWP10-B	10	40	18.5	12	3
GWP12-B	12	43	20	14	4
GWP16-B	16	51	23	21	5.5

* For connection fitting, dimensions of CKD (GW Series) are shown.

L-plug

● GWP□-L

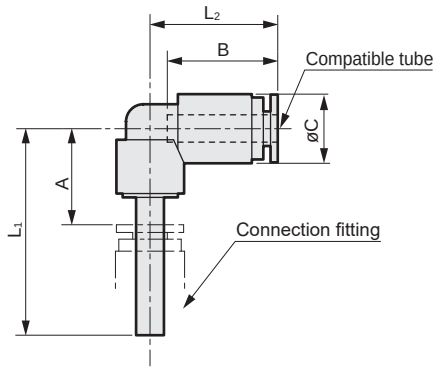

Model No.	Applicable tube O.D. ø	Port size ø	L_1	L_2	A*	B	C	Min. bore size	Eff. X-sectional area mm²	Wt. g
GWP 44-L	4	4	30	18.5	14	16	10	1.7	2.1	4
GWP 46-L		6	31	18.5	13.5	16	10	1.7	2.1	4
GWP 48-L		8	32.5	18.5	13.5	16	10	1.7	2.1	5
GWP 66-L	6	6	34	21	16.5	17.5	12.5	3.4	6.7	6
GWP 68-L		8	35.5	21	16.5	17.5	12.5	3.4	6.7	7
GWP 610-L		10	38	21	16.5	17.5	12.5	3.4	6.7	8
GWP 88-L	8	8	36.5	23.5	17.5	19	14.5	5.4	16.6	9
GWP 810-L		10	39	23.5	17.5	19	14.5	5.4	16.6	10
GWP 812-L		12	40	23.5	17	19	14.5	5.4	16.6	11
GWP1010-L	10	10	41.5	27	20	21.5	17.5	6.8	24.7	14
GWP1012-L		12	42.5	27	19.5	21.5	17.5	6.8	24.7	15
GWP1212-L	12	12	44.5	29.5	21.5	23	20	8.8	34	18

* For connection fitting, dimensions of CKD (GW Series) are shown.

C-plug

● GWP□-C

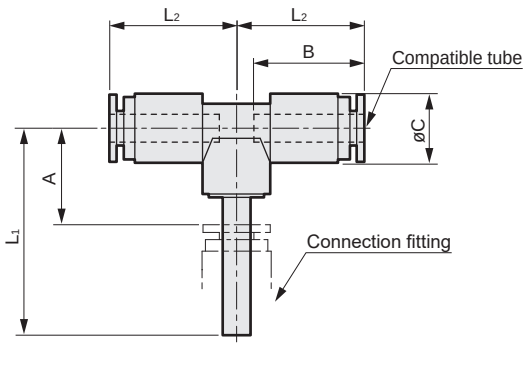

Model No.	Applicable tube O.D. ø	Port size ø	L_1	L_2	A*	B	C	Min. bore size	Eff. X-sectional area mm²	Wt. g
GWP 44-C	4	4	30	18.5	14	16	10	1.7	2.4	6
GWP 46-C		6	31	18.5	13.5	16	10	1.7	2.4	6
GWP 48-C		8	32.5	18.5	13.5	16	10	1.7	2.4	7
GWP 66-C	6	6	34	21	16.5	17.5	12.5	3.4	7.3	9
GWP 68-C		8	35.5	21	16.5	17.5	12.5	3.4	7.3	10
GWP 610-C		10	38	21	16.5	17.5	12.5	3.4	7.3	11
GWP 88-C	8	8	36.5	23.5	17.5	19	14.5	5.4	19.3	13
GWP 810-C		10	39	23.5	17.5	19	14.5	5.4	19.3	14
GWP 812-C		12	40	23.5	17	19	14.5	5.4	19.3	15
GWP1010-C	10	10	41.5	27	20	21.5	17.5	6.8	28.6	20
GWP1012-C		12	42.5	27	19.5	21.5	17.5	6.8	28.6	21
GWP1212-C	12	12	44.5	29.5	21.5	23	20	8.8	35.5	26

* For connection fitting, dimensions of CKD (GW Series) are shown.

Dimensions: Y type plug/cap/manifold (single/with R)/manifold (single)

[Sales unit is 10 pcs./bag]

Y type plug

● GWP□-Y

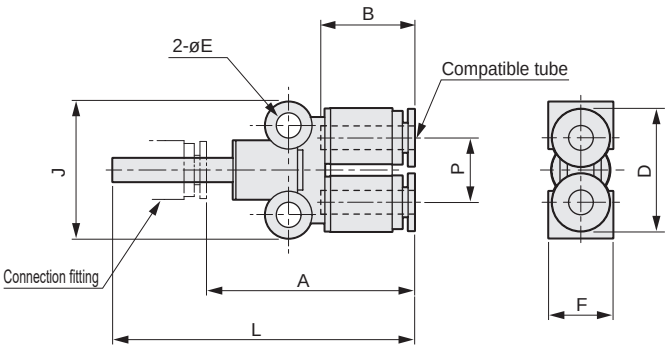

Model No.	Compatible tube O.D. ø	Port size ø	L	A*	B	D	E	F	J	P	Min. bore size	Eff. X-sectional area mm²	Wt. g
GWP 44-Y	4	4	51.5	35.5	16	21	4.2	11	23	11	1.7	2.1	8
GWP 46-Y		6	52.5	35	16	21	4.2	11	23	11	2.5	5.8	8
GWP 48-Y		8	54	35	16	21	4.2	11	23	11	2.5	5.8	8
GWP 66-Y	6	6	55.5	38	17.5	26	4.2	13.5	25.5	13.5	3.9	9.1	11
GWP 68-Y		8	57	38	17.5	26	4.2	13.5	25.5	13.5	4	15.9	11
GWP 610-Y		10	59.5	38	17.5	26	4.2	13.5	25.5	13.5	4	15.9	12
GWP 88-Y	8	8	60	41	19	30	4.2	15.5	27	15.5	5.9	22.2	14
GWP 810-Y		10	62.5	41	19	30	4.2	15.5	27	15.5	6	24.9	15
GWP 812-Y		12	63.5	40.5	19	30	4.2	15.5	27	15.5	6	24.9	16
GWP1010-Y	10	10	70	48.5	21.5	36	4.2	18.5	30	18.5	6.8	28.2	23
GWP1012-Y		12	71	48	21.5	36	4.2	18.5	30	18.5	8	35.5	23
GWP1212-Y	12	12	76	53	23	41	4.2	21	32	21	8.8	36.3	29

* For connection fitting, dimensions of CKD (GW Series) are shown.

Cap

● GWC□

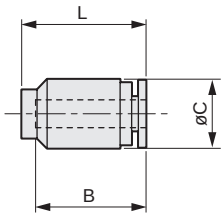

Model No.	Compatible tube O.D. ø	B	øC	L	Wt. g
GWC 4	4	16	10	18	2
GWC 6	6	17.5	12.5	19.5	3
GWC 8	8	19	14.5	21	4
GWC10	10	21.5	17.5	24	7
GWC12	12	23	20	26	9

Manifold (single/with R)

● GWMF□-□

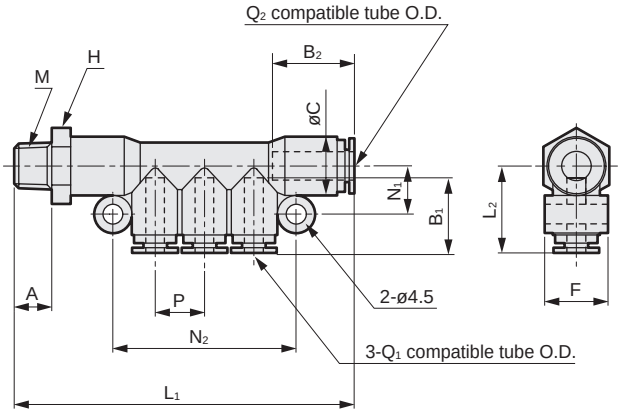

Manifold (single)

● GWMF□-0

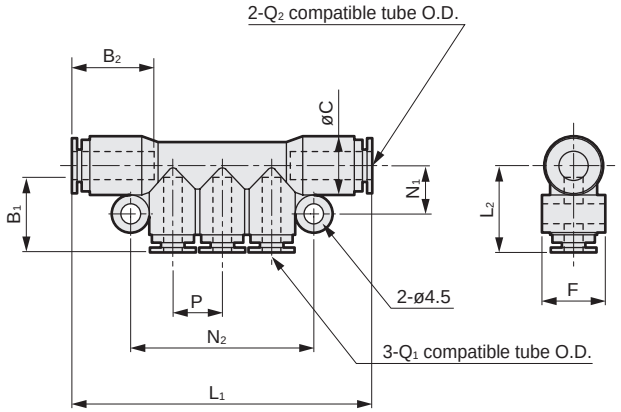

Model No.	Tube O.D. ø Q1	Tube O.D. ø Q2	M	H	L₁	L₂	A	B₁	B₂	C	F	N₁	N₂	P	Eff. X-sectional area mm²	Wt. g
GWMF 46- 6	4	6	R1/8	14	72.5	18.5	8	16	17.5	12.5	13.5	10.5	39	10.5	8.3	27
GWMF 48- 8	4	8	R1/4	17	77.5	19.5	11	16	19	14.5	15.5	11.5	39	10.5	24.2	37
GWMF 68- 8	6	8	R1/4	17	84.5	21	11	17.5	19	14.5	15.5	11.5	46.5	13	24.2	41
GWMF610-10	6	10	R3/8	19	91.5	22	12	17.5	21.5	17.5	18.5	13	46.5	13	35.5	56
GWMF810-10	8	10	R3/8	19	97.5	23.5	12	19	21.5	17.5	18.5	13	52.5	15	35.5	61

Model No.	Tube O.D. ø Q1	Tube O.D. ø Q2	L₁	L₂	B₁	B₂	C	F	N₁	N₂	P	Eff. X-sectional area mm²	Wt. g
GWMF 46-0	4	6	64	18.5	16	17.5	12.5	13.5	10.5	39	10.5	7.9	16
GWMF 48-0	4	8	66	19.5	16	19	14.5	15.5	11.5	39	10.5	22	18
GWMF 68-0	6	8	73	21	17.5	19	14.5	15.5	11.5	46.5	13	22	23
GWMF610-0	6	10	78.5	22	17.5	21.5	17.5	18.5	13	46.5	13	30	28
GWMF810-0	8	10	84.5	23.5	19	21.5	17.5	18.5	13	52.5	15	30	33

Dimensions: Manifold (double/with R)/manifold (double)/insert ring

[Sales unit is 10 pcs./bag]

Manifold (double/with R)

● GWMF□-□-W

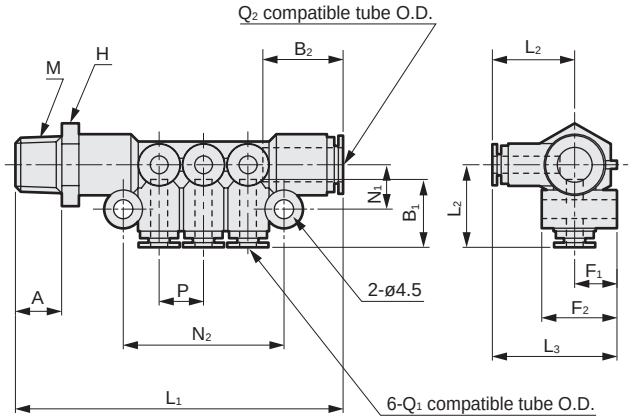

Model No.	Tube O.D. ø Q1	Q2	M	H	L1	L2	L3	A	B1	B2	F1	F2	N1	N2	P	Eff. X-sectional area mm²	Wt. g
GWMF 48- 8-W	4	8	R1/4	17	77.5	19.5	29.5	11	16	19	10	17.5	10.5	38	10.5	24.3	43
GWMF 48-10-W	4	8	R3/8	17	79	19.5	29.5	12	16	19	10	17.5	10.5	38	10.5	23.5	48
GWMF610-10-W	6	10	R3/8	19	91.5	22	32	12	17.5	21.5	10	19.5	12	45	13	35.8	65
GWMF610-15-W	6	10	R1/2	19	94.5	22	32	15	17.5	21.5	10	19.5	12	45	13	35.8	78
GWMF812-10-W	8	12	R3/8	22	100	24.5	36	12	19	23	11.5	22	13	51	15	38.2	86
GWMF812-15-W	8	12	R1/2	22	103	24.5	36	15	19	23	11.5	22	13	51	15	38.2	95

Manifold (double)

● GWMF□-0-W

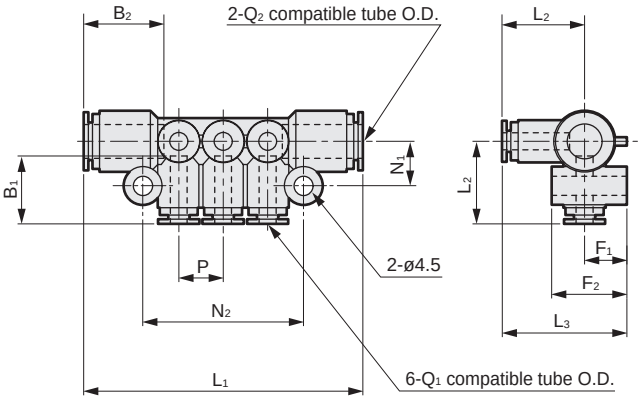

Model No.	Tube O.D. ø Q1	Q2	L1	L2	L3	B1	B2	F1	F2	N1	N2	P	Eff. X-sectional area mm²	Wt. g
GWMF48-0-W	4	8	66	19.5	29.5	16	19	10	17.5	10.5	38	10.5	22	24
GWMF610-0-W	6	10	78.5	22	32	17.5	21.5	10	19.5	12	45	13	30.4	37
GWMF812-0-W	8	12	87	24.5	36	19	23	11.5	22	13	51	15	36	47

Insert ring (tube for U-92□ / for U-95□) [Made-to-order product]

● INS-U□-1

Material: Copper alloy + electroless nickeling

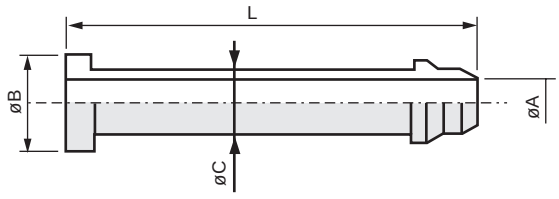

● Tube for U-92** / for U-95**

Model No.	øA	øB	øC	L	Wt. g
INS-U32-1	1.1	2.2	1.7	12.7	0.2
INS-U04-1	1.1	3	1.8	17	0.3
INS-U06-1	3	5	3.8	18	1
INS-U08-1	4	7	4.8	21	1.2
INS-U10-1	5.5	9	6.3	23.5	1.7
INS-U12-1	7	11	7.8	25	2.5

* Tube for NU is available made to order.
* Use an insert ring if tubes U-92, U-95□ or NU are used at vacuum pressure.

GWJ

Fitting (small size)

Port size M3 to 1/8 (Rc or R)

RoHS CAD

● Small push-in fittings suitable for various applications

Space saving with smaller body. Dead space of pipe can be decreased dramatically.

■ Straight

Single straight/ GWJS□-□



Compatible Tube O.D. ø
3.2
4
6

·Refer to page: 840

Female straight/ GWJS3-□-M



Compatible Tube O.D. ø
3.2

·Refer to page: 840

Bulkhead/ GWJS3-0-X



Compatible Tube O.D. ø
3.2

·Refer to page: 840

Straight/ GWJS3-0



Compatible Tube O.D. ø
3.2

·Refer to page: 840

■ Elbow

Different diameter straight/ GWJS□-0



Compatible Tube O.D. ø
3.2, 4
3.2, 6

·Refer to page: 840

Single elbow/ GWJL□-□



Compatible Tube O.D. ø
3.2
4
6

·Refer to page: 840

Long elbow/ GWJL□-□-L

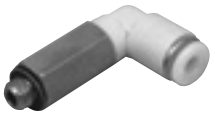

Compatible Tube O.D. ø
3.2
4
6

·Refer to page: 841

Elbow/ GWJL3-0



Compatible Tube O.D. ø
3.2

·Refer to page: 841

■ Tee

Double tee/ GWJT3-□



Compatible Tube O.D. ø
3.2

·Refer to page: 841

D tee/ GWJT3-□-D



Compatible Tube O.D. ø
3.2

·Refer to page: 841

Tee/ GWJT3-0



Compatible Tube O.D. ø
3.2

·Refer to page: 841

Y tee/ GWJY□-0



Compatible Tube O.D. ø
3.2, 3.2
3.2, 4

·Refer to page: 841

■ Plug

Blanking plug/ GWJP3-B



Compatible Tube O.D. ø
3.2

·Refer to page: 842

● Sales unit is 10 pcs./bag.

Specifications

Item		GWJ
Working fluid		Compressed air
Max. working pressure	MPa	1.0 (≈150 psi, 10 bar)
Ambient temperature	°C	-10 (14°F) to 60 (140°F) (no freezing)
Tube used		Soft nylon tube (model No. F-1532, F-1504, F-1506) Urethane tube (model No. U-9532, U-9504, U-9506, NU-04, NU-06) Note

Note: Refer to page 902 for tube dimensions, ambient temperature and working pressure.

How to order

* Refer to the model No. on the dimensions page (pages 840 to 842) for the model No. combination.

GWJ S 3 - 6 - M
(A) (B) (C) (D)

(A) Shape	
S	Straight
L	Elbow
Y	Y tee
T	Tee
P	Plug

(B) Compatible tube O.D.	
3	ø3.2
4	ø4
6	ø6

(C) Port size	
M3	M3x0.5
M5	M5x0.8
6	R1/8
0	No thread
B	Blanking plug

(D) Other combinations	
L	Long
D	D type
X	Bulkhead
M	Female

Note: Sales unit is 10 pcs./bag.

Clean-room specifications

(Catalog No. CB-033SA)

GWJ.....**-P7***

GWJ.....**-P80**

Internal structure and main parts list

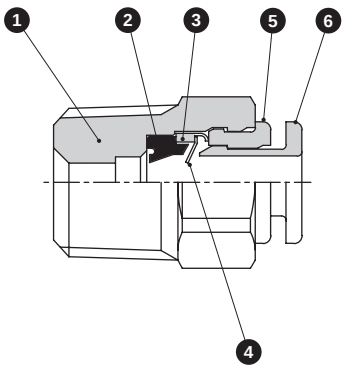

No.	Name	Material	
1	Body *1	Copper alloy (electroless nickeling treatment)	
		Polybutylene terephthalate	
2	Packing	Nitrile rubber	
3	Holder	Copper alloy (electroless nickeling treatment)	
4	Chuck	Stainless steel	
5	Outer ring	Metal	Polyacetal
		Resin	CU alloy (electroless Ni treatment)
6	Push ring *2	Polyacetal	

*1: The body of the single straight, female straight and bulkhead is copper alloy (electroless nickeling).
*2: Standard push ring color: white, clean-room specifications P70: pink, P74: orange, P80: light blue.

Dimensions: Single straight/female straight/bulkhead/straight/different diameter straight/single elbow

CAD

[Sales unit is 10 pcs./bag]

Single straight

● GWJS□-□

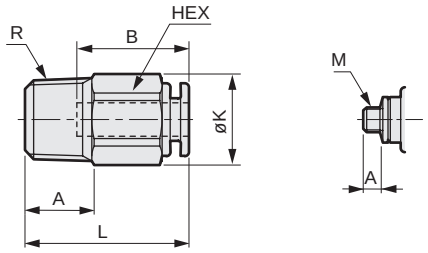

Dimensions with * are for model with punched hexagon hole.

Model No.	Tube O.D. ø	R M	HEX	K	L	A	B	Min. bore size	Eff. X-sectional area mm²	Wt. g
GWJS3-M3	3.2	M3x0.5	8	8.8	17	2.4	12.5	1.2	0.9	2.4
GWJS3-M5		M5x0.8	8	8.8	18	3.4	12.5	2.5	2.5	3
GWJS3- 6		1/8	10	11	16.5	8	12.5	2.5*	2.5	5.9
GWJS4-M3	4	M3x0.5	10	11	18	2.4	13.5	1.2	0.9	7.1
GWJS4-M5		M5x0.8	10	11	19	3.4	13.5	2.5	4	5.2
GWJS4- 6		1/8	10	11	20	8	13.5	2.5*	4	7.1
GWJS6-M5	6	M5x0.8	11	12.1	20	3.4	14.5	2.5	4	4.9
GWJS6- 6		1/8	11	12.1	21.5	8	14.5	4*	11	6.8

Female straight

● GWJS3-□-M

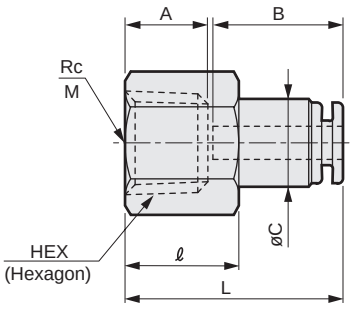

Model No.	Tube O.D. ø	Rc M	HEX	L	A	B	C	ℓ	Min. bore size	Eff. X-sectional area mm²	Wt. g
GWJS3-M3-M	3.2	M3x0.5	8	17.5	4	12.5	7.8	7.0	2.5	2.5	4
GWJS3-M5-M		M5x0.8	8	18.5	5	12.5	7.8	8.0	2.5	2.5	4
GWJS3- 6-M		1/8	12	21.5	8	12.5	8.5	11.0	2.5	2.5	4

Bulkhead

● GWJS3-0-X

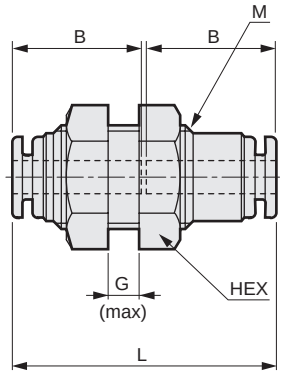

Model No.	Tube O.D. ø	L	B	HEX	Min. bore size	M	Panel thickness/ G	Panel bore size	Eff. X-sectional area mm²	Wt. g
GWJS3-0-X	3.2	26.5	12.5	12	2.5	M10x1.0	5	10.5	2.5	9.8

Straight

● GWJS3-0

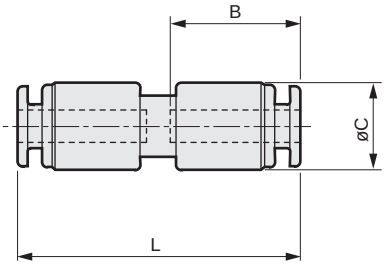

Model No.	Tube O.D. ø	L	B	C	Min. bore size	Eff. X-sectional area mm²	Wt. g
GWJS3-0	3.2	27.5	12.5	8.5	2.2	2.5	2.4

Different diameter straight

● GWJS□-0

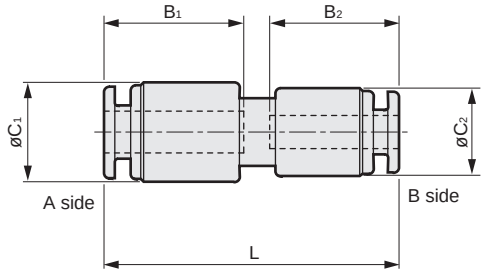

Model No.	Tube O.D. ø		L	B1	B2	C1	C2	Min. bore size	Eff. X-sectional area mm²	Wt. g
	A side	B side								
GWJS34-0	4	3.2	28.5	13.5	12.5	9.6	8.5	2.2	2.5	3.1
GWJS36-0	6	3.2	28.5	14.5	12.5	11.8	8.8	2.2	2.5	4.1

Single elbow

● GWJL□-□

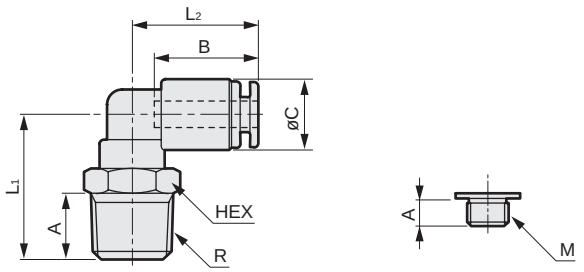

Model No.	Tube O.D. ø	R M	HEX	L1	L2	A	B	C	Min. bore size	Eff. X-sectional area mm²	Wt. g
GWJL3-M3	3.2	M3x0.5	8	13	15.5	2.4	12.5	8.5	1.2	0.8	3.3
GWJL3-M5		M5x0.8	8	13	15.5	3.4	12.5	8.5	2.2	2.5	3.6
GWJL3- 6		1/8	10	17.5	15.5	8	12.5	8.5	2.2	2.3	6
GWJL4-M3	4	M3x0.5	8	13	16.5	2.4	13.5	9.6	1.2	0.8	4
GWJL4-M5		M5x0.8	8	13	16.5	3.4	13.5	9.6	2.5	3	4.4
GWJL4- 6		1/8	10	17.5	16.5	8	13.5	9.6	2.5	3	6.8
GWJL6-M5	6	M5x0.8	10	15.5	18.5	3.4	14.5	11.8	2.5	3.5	7
GWJL6- 6		1/8	10	18.5	18.5	8	14.5	11.8	4	9.5	8.4

Dimensions: Long elbow/elbow/double tee/D tee/tee/Y tee

[Sales unit is 10 pcs./bag]

Long elbow
● GWJL□-□-L

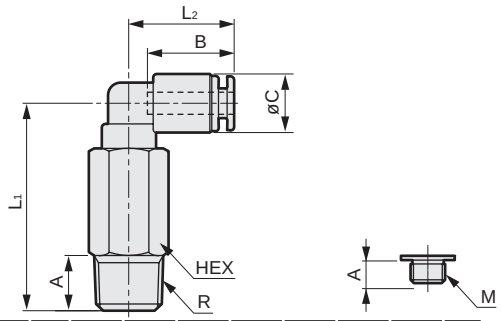

Model No.	Tube O.D. ø	R M	HEX	L1	L2	A	B	C	Min. bore size	Eff. X-sectional area mm²	Wt. g
GWJL3-M3-L	3.2	M3x0.5	8	25.5	15.5	2.4	12.5	8.5	1.2	0.8	8.2
GWJL3-M5-L		M5x0.8	8	25.5	15.5	3.4	12.5	8.5	2.2	2.3	8.6
GWJL3- 6-L		1/8	10	30	15.5	8	12.5	8.5	2.2	2.3	13
GWJL4-M5-L	4	M5x0.8	8	25.5	16.5	3.4	13.5	9.6	2.5	3	9.4
GWJL4- 6-L		1/8	10	30	16.5	8	13.5	9.6	2.5	3	14
GWJL6-M5-L	6	M5x0.8	10	30.5	18.5	3.4	14.5	11.8	2.5	3.5	16
GWJL6- 6-L		1/8	10	33.5	18.5	8	14.5	11.8	4	8.5	16

Elbow
● GWJL3-0

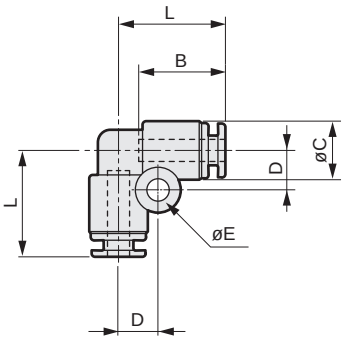

Model No.	Tube O.D. ø	L	B	C	D	E	Min. bore size	Eff. X-sectional area mm²	Wt. g
GWJL3-0	3.2	15.5	12.5	8.5	5.7	3.2	2.2	2.3	2.8

Double tee
● GWJT3-□

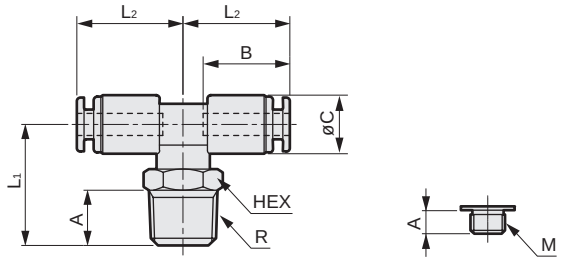

Model No.	Tube O.D. ø	R M	HEX	L1	L2	A	B	C	Min. bore size	Eff. X-sectional area mm²	Wt. g
GWJT3-M3	3.2	M3x0.5	8	13	15.5	2.4	12.5	8.5	1.2	0.9	4.4
GWJT3-M5		M5x0.8	8	13	15.5	3.4	12.5	8.5	2.2	2.7	4.7
GWJT3-6		1/8	10	17.5	15.5	8	12.5	8.5	2.2	2.7	7.1

D tee
● GWJT3-□-D

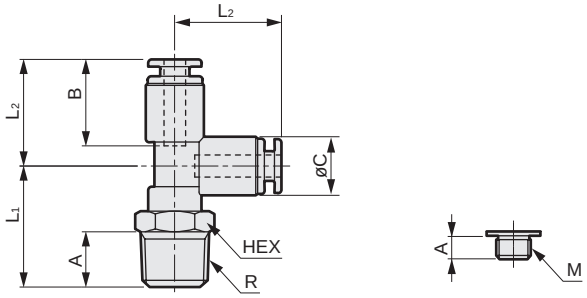

Model No.	Tube O.D. ø	R M	HEX	L1	L2	A	B	C	Min. bore size	Eff. X-sectional area mm²	Wt. g
GWJT3-M3-D	3.2	M3x0.5	8	13	15.5	2.4	12.5	8.5	1.2	0.9	4.4
GWJT3-M5-D		M5x0.8	8	13	15.5	3.4	12.5	8.5	2.2	2.7	4.8
GWJT3-6-D		1/8	10	17.5	15.5	8	12.5	8.5	2.2	2.7	7.2

Tee
● GWJT3-0

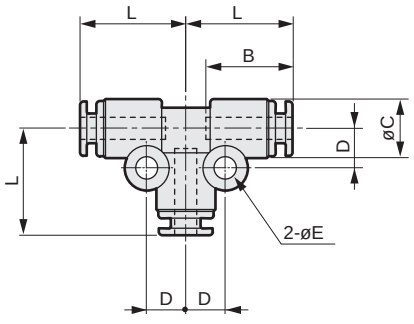

Model No.	Tube O.D. ø	L	B	C	D	E	Min. bore size	Eff. X-sectional area mm²	Wt. g
GWJT3-0	3.2	15.5	12.5	8.5	5.7	3.2	2.2	2.7	2.4

Y tee
● GWJY□-0

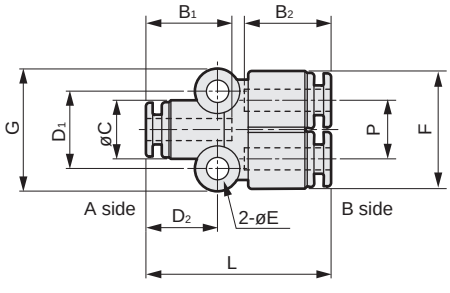

Model No.	Tube O.D. ø		L	B1	B2	C	D1	D2	E	F	P	G	Eff. X-sectional area mm²	Wt. g
	A side	B side												
GWJY33-0	3.2	3.2	27	12.5	12.5	8.5	11.2	10.5	3.2	17	8.5	17.7	2.7	4
GWJY43-0	4	3.2	28.5	13.5	12.5	9.6	12.2	12	3.2	17	8.5	18.7	2.7	4.9

Dimensions: Blanking plug

[Sales unit is 10 pcs./bag]

Blanking plug

- GWJP3-B
- GWP□-B

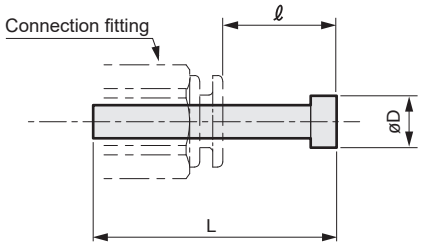

Material: Polyamide

Model No.	Fitting port size ø	L	L*	D	Weight g
GWJP3-B	3.2	23.5	11	5	0.2
GWP 4-B	4	27	13.5	6	0.5
GWP 6-B	6	29	14.5	8	1

* For connection fitting, dimensions of CKD (GWJ Series) are shown.

MEMO

ZW Fitting, stainless steel series

Port size M5 to R1/2

Single straight
ZW-S □-□



Compatible tube O.D. ø
4
6
8
10
12

·Refer to page: 847

Single elbow
ZW-L □-□



Compatible tube O.D. ø
4
6
8
10
12

·Refer to page: 847

Elbow
ZW-L □-0



Compatible tube O.D. ø
4
6
8
10
12

·Refer to page: 847

Tee
ZW-T □-0



Compatible tube O.D. ø
4
6
8
10
12

·Refer to page: 847

Straight
ZW-S□-0



Compatible tube O.D. ø
4
6
8
10
12

·Refer to page: 847

· Sales unit is 1 pc.

Flame-resistant resin and stainless steel materials have been adopted. —— ZW Series fittings.

Highly efficient, clean-feeling white body.

Port size: M5 to R1/2

Compatible tube O.D.: ø4 to ø12

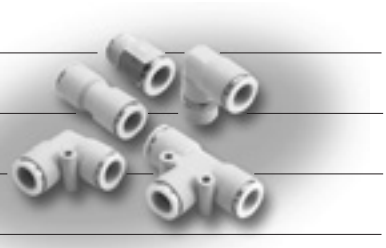

- Compact size saves space.
- Smooth insertion and accurate sealing.
- Flame-resistant resin incorporated in white body and push ring. (Equivalent to UL94 standards V-0)
- Stainless steel incorporated for all metal parts.

White flame-resistant resin body

Flame-resistant PBT (UL94 Standards V-0 or equivalent) used as standard for a white body blending in with any work environment.

Full flow rate

By eliminating sections narrower than the tubing's bore, a flow equivalent to the tubing's bore can be passed.

Easy piping work

The section of the pipe connected with the body rotates freely, so piping removal can be set freely.

Standard stainless steel

As standard, all metal parts are made of stainless steel to improve corrosion resistance and appearance.

Sealant applied on threads

Teflon resin is coated on the thread part, eliminating the need to wind sealing tape.
The even seal prevents leakage, etc.

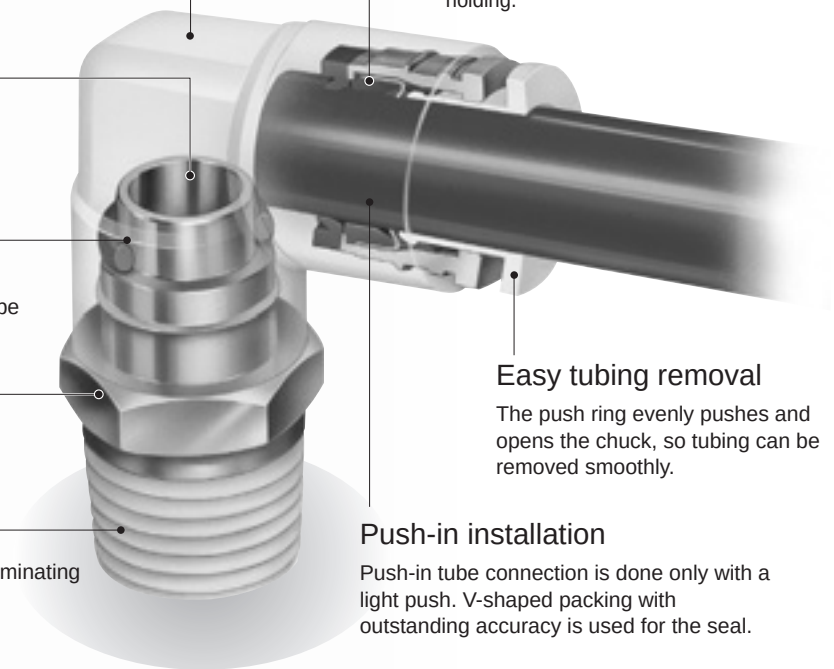

Secure tubing holding

Chuck fitting acts in the direction in which the tubing dislocates, ensuring highly reliable holding.

Easy tubing removal

The push ring evenly pushes and opens the chuck, so tubing can be removed smoothly.

Push-in installation

Push-in tube connection is done only with a light push. V-shaped packing with outstanding accuracy is used for the seal.

ZW Series

Flame-resistant resin and stainless steel materials have been adopted.

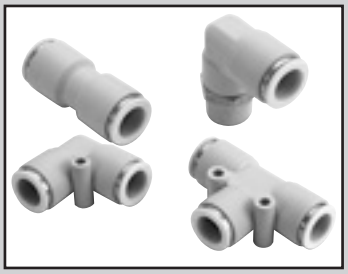

Fitting, stainless steel series

ZW Series

- Port size: M5 to R1/2
- Compatible tube: ø4 to ø12

RoHS

Specifications

Descriptions	ZW
Working fluid	Compressed air
Max. working pressure MPa	1.0
Negative pressure KPa	−100 *2
Ambient temperature °C	-10 to 60 (no freezing)
Tube used	Soft nylon tube (F-15*)
	Urethane tube (U-92*, U-95*, NU-*) *1

*1: Refer to page 902 for tube dimensions, ambient temperature and working pressure.
*2: Use an insert ring when using urethane tube (U-92**, U-95**, NU-**) under vacuum pressure.
(This is a made-to-order product. Contact CKD for details.)

How to order

* Refer to the model No. on the dimensions page (page 847) for the model No. combination.

ZW - L 6 - 8 - ( )
A B C D

A Shape	
S	Straight
L	Elbow
T	Tee

B Compatible tube O.D.	
4	ø4
6	ø6
8	ø8
10	ø10
12	ø12

C Port size	
M5	M 5 x 0.8
6	R 1/8
8	R 1/4
10	R 3/8
15	R 1/2
0	No thread

D Option	
Blank	No
P11	Ozone-proof product

Note: Sales unit is 1 pc.

Clean-room specifications (Catalog No. CB-033SA)

ZW-.....-P80

Specifications for rechargeable battery (Catalog No. CC-1226A)

- Design compatible with rechargeable battery manufacturing process

ZW-.....-P4

Internal structure and main parts list

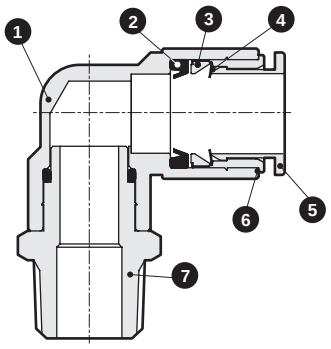

Part No.	Part name	Material
1	Body *1	Stainless steel (SUS304)
		Polybutylene terephthalate (flame-resistant resin *2)
2	Packing	Nitrile rubber
3	Chuck holder	polyether sulfone
4	Chuck	Stainless steel (SUS301)
5	Push ring *3	Polybutylene terephthalate (flame-resistant resin *2)
6	Outer ring	Stainless steel (SUS304)
7	Drive-in nipple	Stainless steel (SUS304)

*1: The single straight body is stainless steel (SUS304).
*2: Equivalent to UL94 standards V-0
*3: Standard push ring color: pure white, P80: light blue, P4: pure white.
*4: For the stainless steel series, the ❺ push ring color is identified with pure white.
*5: P4 and FP materials differ from the above.
Mainly, stainless steel of ❶ ❻ ❼ is SUS303.
Refer to Catalog No. CC-1012A for other details.

Dimensions

Single straight

● ZW-S□-□

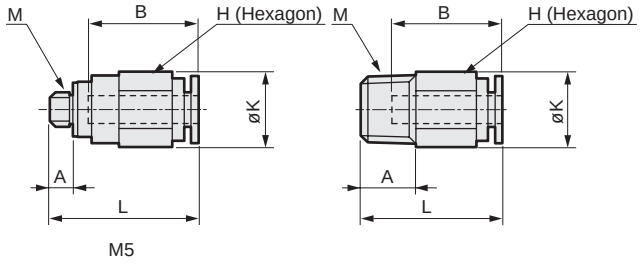

Model No.	Tube O.D. ø	M	H	K	L	A	B	Min. bore size	Eff. X-sectional area mm²	Wt. g
ZW-S 4-M5	4	M5x0.8	10	11	21.5	4	16	2.5	4	6.7
ZW-S 4- 6		R1/8	10	11	20.5	8	16	2.5	4	7.8
ZW-S 4- 8		R1/4	14	15	19.5	11	16	2.5	4	15
ZW-S 6-M5	6	M5x0.8	12	13	23	4	17.5	2.5	4.4	8.6
ZW-S 6- 6		R1/8	12	13	23	8	17.5	4	10.3	9.5
ZW-S 6- 8		R1/4	14	15	23.5	11	17.5	4	10.3	17
ZW-S 6-10		R3/8	17	19.6	21.5	12	17.5	4	10.3	26
ZW-S 8- 6	8	R1/8	14	15.8	28	8	19	5	17.5	16
ZW-S 8- 8		R1/4	14	15.8	27	11	19	6	22.4	17
ZW-S 8-10		R3/8	17	19.6	22.5	12	19	6	22.4	23
ZW-S10- 8	10	R1/4	17	19.6	32.5	11	21.5	8	30.5	26
ZW-S10-10		R3/8	17	19.6	28.5	12	21.5	8	30.5	26
ZW-S10-15		R1/2	22	24	26.5	15	21.5	8	30.5	46
ZW-S12-10	12	R3/8	19	21	30.5	12	23	10	40	29
ZW-S12-15		R1/2	22	24	29.5	15	23	10	40	47

Single elbow

● ZW-L □-□

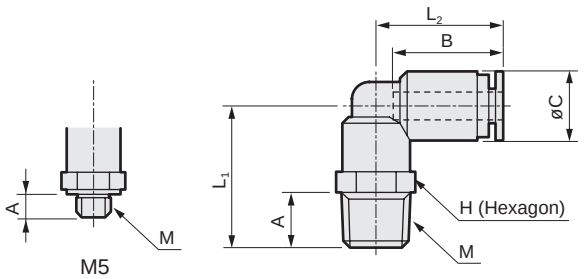

Model No.	Tube O.D. ø	M	H	L₁	L₂	A	B	C	Min. bore size	Eff. X-sectional area mm²	Wt. g
ZW-L 4-M5	4	M5x0.8	8	15	18	4	16	10	2.5	3.2	4.9
ZW-L 4- 6		R1/8	10	20.5	18.5	8	16	10	2.5	3.2	8
ZW-L 4- 8		R1/4	14	24	18.5	11	16	10	2.5	3.2	15
ZW-L 6-M5	6	M5x0.8	10	15	20	4	17.5	12.5	2.5	4.2	6.8
ZW-L 6- 6		R1/8	12	24	21	8	17.5	12.5	4	8	13
ZW-L 6- 8		R1/4	14	27.5	21	11	17.5	12.5	4	8	17
ZW-L 6-10		R3/8	17	29	21	12	17.5	12.5	4	8	25
ZW-L 8- 6	8	R1/8	14	25.5	23.5	8	19	14.5	6	18	16
ZW-L 8- 8		R1/4	14	28.5	23.5	11	19	14.5	6	18	19
ZW-L 8-10		R3/8	17	30	23.5	12	19	14.5	6	18	27
ZW-L10- 8	10	R1/4	17	31	27	11	21.5	17.5	8	27	27
ZW-L10-10		R3/8	17	32.5	27	12	21.5	17.5	8	27	32
ZW-L10-15		R1/2	22	35.5	27	15	21.5	17.5	8	27	46
ZW-L12-10	12	R3/8	19	34.5	29.5	12	23	20	9	35	40
ZW-L12-15		R1/2	22	37.5	29.5	15	23	20	9	35.5	52

Elbow

[Sales unit is 1 pc./bag]

● ZW-L □-□-0

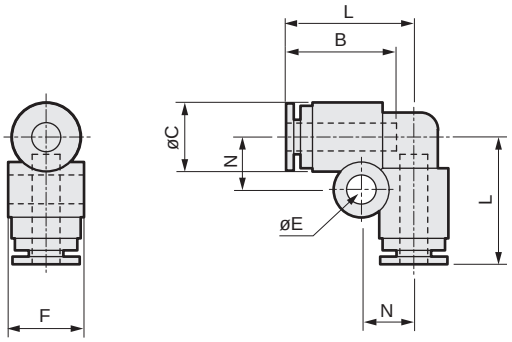

Model No.	Tube O.D. ø	L	B	C	N	E	F	Min. bore size	Eff. X-sectional area mm²	Wt. g
ZW-L 4-0	4	18.5	16	10	7.5	4.2	11	2.5	3	5.2
ZW-L 6-0	6	21	17.5	12.5	8.5	4.2	13.5	4	7.5	7.7
ZW-L 8-0	8	23.5	19	14.5	9.5	4.2	15.5	6	17	9.5
ZW-L10-0	10	27	21.5	17.5	11	4.2	18.5	8	25.5	16
ZW-L12-0	12	29.5	23	20	12	4.2	21	10	34	20

Tee

● ZW-T □-0

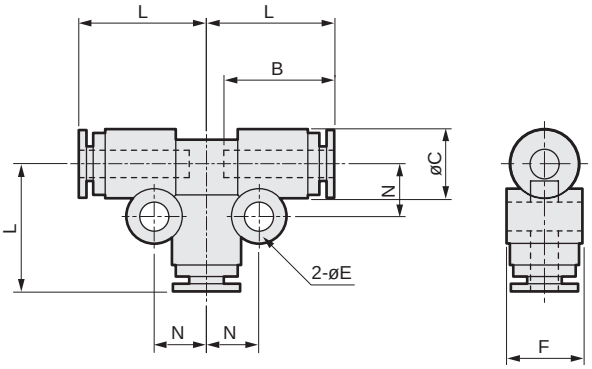

Model No.	Tube O.D. ø	L	B	C	E	F	N	Min. bore size	Eff. X-sectional area mm²	Wt. g
ZW-T 4-0	4	18.5	16	10	4.2	11	7.5	2.5	3.6	8.2
ZW-T 6-0	6	21	17.5	12.5	4.2	13.5	8.5	4	9.7	12
ZW-T 8-0	8	23.5	19	14.5	4.2	15.5	9.5	6	22	15
ZW-T10-0	10	27	21.5	17.5	4.2	18.5	11	8	30	23
ZW-T12-0	12	29.5	23	20	4.2	21	12	10	35.5	29

Straight

● ZW-S□-0

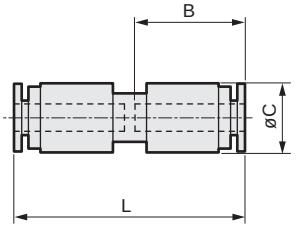

Model No.	Tube O.D. ø	L	B	C	Min. bore size	Eff. X-sectional area mm²	Wt. g
ZW-S 4-0	4	33.5	16	10	2.5	4	4.5
ZW-S 6-0	6	36.5	17.5	12.5	4	10	6.9
ZW-S 8-0	8	39.5	19	14.5	6	22	8
ZW-S10-0	10	45	21.5	17.5	8	30	14
ZW-S12-0	12	47.5	23	20	10	35	17

ZSP

Fitting stainless steel

Port size: M5, R1/8 to R1/2

CAD

Straight
ZSP-C□-□

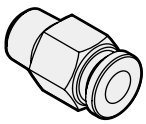

Compatible tube O.D. ø
4
6
8
10
12

·Refer to page: 851

Union straight
ZSP-U□

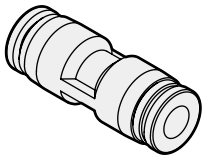

Compatible tube O.D. ø
4
6
8
10
12

·Refer to page: 851

Elbow
ZSP-L□-□

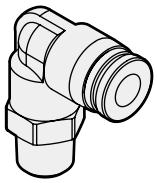

Compatible tube O.D. ø
4
6
8
10
12

·Refer to page: 851

Union elbow
ZSP-V□

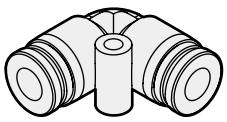

Compatible tube O.D. ø
4
6
8
10
12

·Refer to page: 851

Tee
ZSP-B□-□

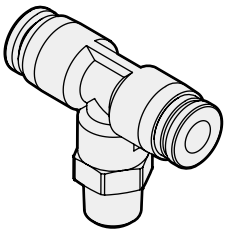

Compatible tube O.D. ø
4
6
8
10
12

·Refer to page: 852

Union tee
ZSP-E□

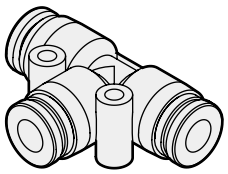

Compatible tube O.D. ø
4
6
8
10
12

·Refer to page: 852

Different diameter union straight
ZSP-G□-□

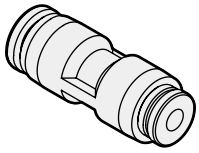

Compatible tube O.D. ø
6/4
8/6
10/8
12/10

·Refer to page: 852

Branch tee
ZSP-D□-□

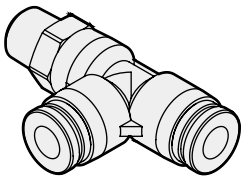

Compatible tube O.D. ø
4
6
8
10
12

·Refer to page: 852

Tripod elbow
ZSP-VX□-□

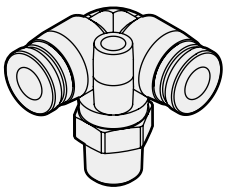

Compatible tube O.D. ø
4
6
8
10
12

·Refer to page: 853

Union Y
ZSP-Y□

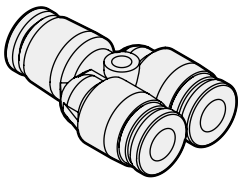

Compatible tube O.D. ø
4
6
8
10
12

·Refer to page: 853

Different diameter union tee
ZSP-EG□-□

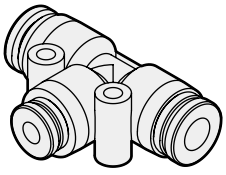

Compatible tube O.D. ø
6/4
8/6
10/8
12/10

·Refer to page: 853

Branch Y
ZSP-X□-□

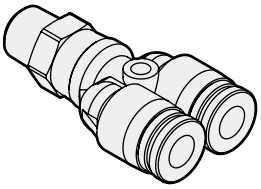

Compatible tube O.D. ø
4
6
8
10
12

·Refer to page: 853

· Sales unit is 10 pcs./bag.

Branch double Y
ZSP-RX□-□

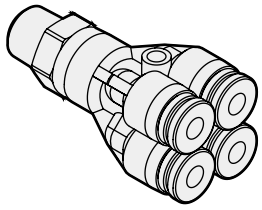

Compatible tube O.D. ø
4
6

·Refer to page: 854

Different diameter double Y
ZSP-RG□-□

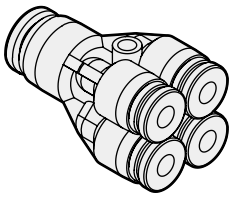

Compatible tube O.D. ø
6/4
8/6

·Refer to page: 854

Tripod union
ZSP-VU□

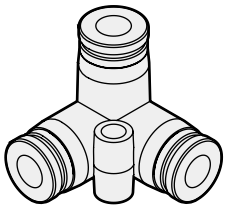

Compatible tube O.D. ø
4
6
8
10
12

·Refer to page: 854

Different diameter union Y
ZSP-W□-□

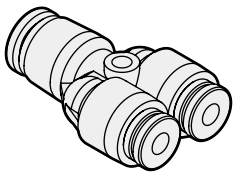

Compatible tube O.D. ø
6/4
8/6
10/8
12/10

·Refer to page: 854

Union A
ZSP-AU□

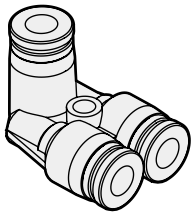

Compatible tube O.D. ø
4
6
8
10
12

·Refer to page: 855

Branch elbow
ZSP-AX□-□

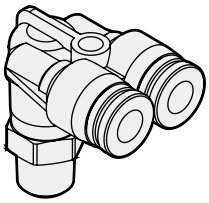

Compatible tube O.D. ø
4
6
8
10
12

·Refer to page: 855

Branch triple
ZSP-KD□-□-□

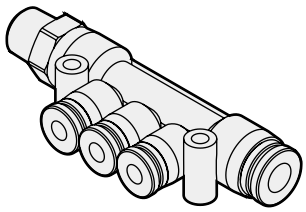

Compatible tube O.D. ø
6/4
8/4
8/6
10/8

·Refer to page: 855

Different diameter triple
ZSP-KG□-□

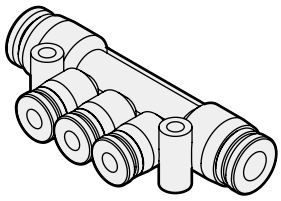

Compatible tube O.D. ø
6/4
8/4
8/6
10/6
10/8

·Refer to page: 855

Cap
ZSP-PF□

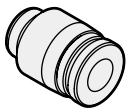

Compatible tube O.D. ø
4
6
8
10
12

·Refer to page: 856

Bulkhead union
ZSP-M□

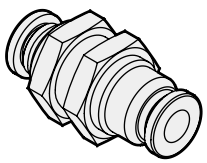

Compatible tube O.D. ø
4
6
8
10
12

·Refer to page: 856

Reducer
ZSP-J□-□

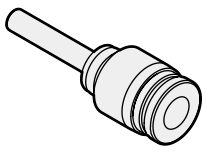

Compatible tube O.D. ø
6/4
4/6
4/8
6/8
4/10
6/10
8/10
6/12
8/12
10/12

·Refer to page: 856

· Sales unit is 10 pcs./bag.

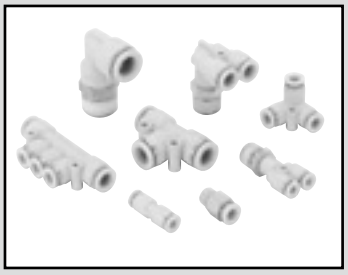

Fitting stainless steel

ZSP Series

- Port size: M5, R1/8 to 1/2
- Compatible tube O.D.: ø4 to ø12

RoHS CAD

Features

- Stainless steel (SUS303 or equivalent) metal body
  Perfect for use in corrosive atmospheres, or atmospheres susceptible to copper ions.
- Diverse range of model variations
  A wide range of variations for various pneumatic piping.
- Environment-friendly products
  As a RoHS Directive compatible product, all substances which adversely affect the global environment have been eliminated from the materials.

Specifications

Item		ZSP
Working fluid		Air
Max. working pressure	MPa	1.0 (≈150 psi, 10 bar)
Negative pressure	kPa	-100 (≈-15 psi, -1 bar)
Ambient temperature	°C	0 (32°F) to 60 (140°F) (no freezing. *1)

*1: Freezing may occur due to adiabatic expansion depending on the air quality (dew point).

How to order

* Refer to the model No. on the dimensions page (pages 851 to 856) for the model No. combination.

ZSP - C 4 - 6
(A) (B) (C)

Ⓐ Shape			
C	Straight	RX	Branch double Y
U	Union straight	RG	Different diameter double Y
L	Elbow	VU	Tripod union
V	Union elbow	W	Different diameter union Y
B	Tee	AU	Union A
E	Union tee	AX	Branch elbow
G	Different diameter union straight	KD	Branch triple
D	Branch tee	KG	Different diameter triple
VX	Tripod elbow	PF	Cap
Y	Union Y	M	Bulkhead union
EG	Different diameter union tee	J	Reducer
X	Branch Y		

Ⓑ Compatible tube O.D.	
4	ø4
6	ø6
8	ø8
10	ø10
12	ø12

Ⓒ Port size *1	
M5	M5×0.8
M5S	M5 x 0.8 (Slim type)
6	R1/8
8	R1/4
10	R3/8
15	R1/2

*1: In the case of Ⓒ compatible tube O.D., select from the Ⓑ table.
*2: Sales unit is 10 pcs./bag.

Internal structure and parts list

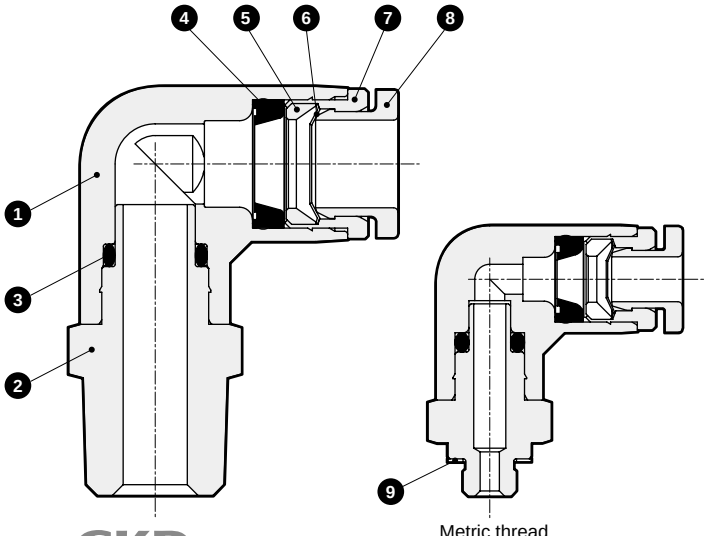

No.	Part name	Material
1	Resin body	Polybutylene terephthalate
2	Metal body	Stainless steel (SUS303 or equivalent)
3	O-ring	Hydrogenated nitrile rubber
4	Elastic sleeve	Hydrogenated nitrile rubber
5	Lock ring	Stainless steel (SUS303 or equivalent)
6	Lock claw	Stainless steel (SUS301)
7	Guide ring	Stainless steel (SUS303 or equivalent)
8	Release ring	Polyacetal
9	Gasket	Polyphenylene sulfide

Dimensions

Straight

● ZSP-C□-□

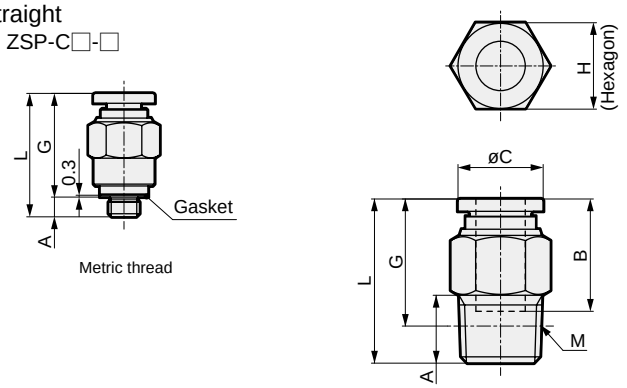

Model No.	Tube O.D. ø	M	A	L	G	B	C	H	Eff. X-sectional area mm²	Wt. g
ZSP-C4-M5	4	M5×0.8	3.2	20	16.8	14.9	9.9	10	1.9	5.6
ZSP-C4-M5S		M5×0.8	3.2	22.9	19.7	14.9	9.9	8	1.9	5.9
ZSP-C4-6		R1/8	8	21	17	14.9	9.9	10	5.3	7.5
ZSP-C4-8		R1/4	11	21	15	14.9	9.9	14	5.3	15
ZSP-C6-M5	6	M5×0.8	3.2	22.1	18.9	17	11.8	12	1.9	8.1
ZSP-C6-6		R1/8	8	22.6	18.6	17	11.8	12	12.5	8.3
ZSP-C6-8		R1/4	11	24.6	18.5	17	11.8	14	12.5	16
ZSP-C6-10		R3/8	12	23.6	17.2	17	11.8	17	12.5	25
ZSP-C8-6	8	R1/8	8	27.9	23.9	18.2	13.8	14	20	14
ZSP-C8-8		R1/4	11	26.6	20.6	18.2	13.8	14	20	14
ZSP-C8-10		R3/8	12	23.9	17.6	18.2	13.8	17	20	21
ZSP-C10-6	10	R1/8	8	30.3	26.3	20.7	16.8	17	22.9	21
ZSP-C10-8		R1/4	11	29.8	23.8	20.7	16.8	17	35	19
ZSP-C10-10		R3/8	12	29.3	23	20.7	16.8	17	35	24
ZSP-C10-15		R1/2	15	30.3	22.1	20.7	16.8	21	35	46
ZSP-C12-8	12	R1/4	11	35.9	29.9	23.3	19.8	21	35	40
ZSP-C12-10		R3/8	12	31.9	25.6	23.3	19.8	21	59	32
ZSP-C12-15		R1/2	15	33.9	25.7	23.3	19.8	21	59	45

Note) The G dimensions for the taper screw type are reference dimensions after tightening.

Union Straight

[Sales unit is 10 pcs./bag]

● ZSP-U□-□

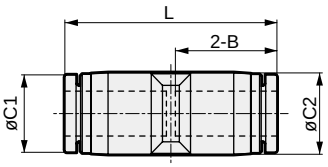

Model No.	Tube O.D. ø	L	C1	C2	B	Eff. X-sectional area mm²	Wt. g
ZSP-U4	4	30.8	9.9	10	14.9	5.3	4.4
ZSP-U6	6	34.9	11.8	12.5	17	12.5	6.2
ZSP-U8	8	37.8	13.8	14.5	18.1	20	8.8
ZSP-U10	10	41.4	16.8	17.5	20.2	35	15
ZSP-U12	12	47.8	19.8	21	23.4	59	21

Elbow

● ZSP-L□-□

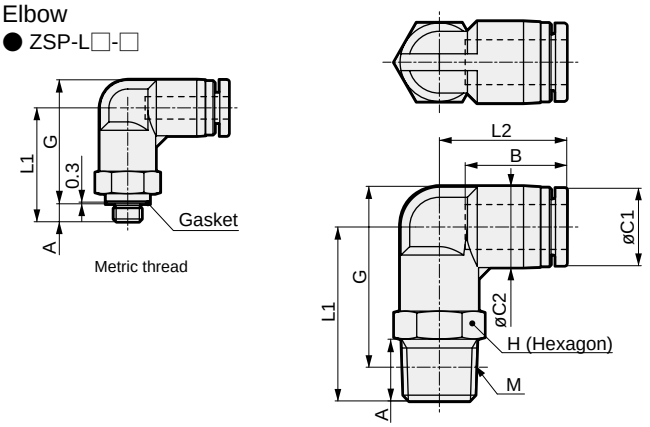

Model No.	Tube O.D. ø	M	A	L1	G	C1	C2	B	L2	H	Eff. X-sectional area mm²	Wt. g
ZSP-L4-M5	4	M5×0.8	3.2	20.3	22.1	9.9	10	14.9	18	10	1.5	7.3
ZSP-L4-6		R1/8	8	23.3	24.3	9.9	10	14.9	18	10	4.2	10
ZSP-L4-8		R1/4	11	26.3	25.3	9.9	10	14.9	18	14	4.2	19
ZSP-L6-M5	6	M5×0.8	3.2	22	25.1	11.8	12.5	16.8	19.8	12	1.5	11
ZSP-L6-6		R1/8	8	25	27.3	11.8	12.5	16.8	19.8	12	10	13
ZSP-L6-8		R1/4	11	28	28.2	11.8	12.5	16.8	19.8	14	10	20
ZSP-L6-10		R3/8	12	29.8	29.7	11.8	12.5	16.8	19.8	17	10	32
ZSP-L8-6	8	R1/8	8	28	31.3	13.8	14.5	18.1	22.7	14	16.5	17
ZSP-L8-8		R1/4	11	31	32.2	13.8	14.5	18.1	22.7	14	16.5	22
ZSP-L8-10		R3/8	12	32.8	33.7	13.8	14.5	18.1	22.7	17	16.5	34
ZSP-L10-6	10	R1/8	8	33	37.8	16.8	17.5	20.2	26.2	17	22.4	29
ZSP-L10-8		R1/4	11	36	38.7	16.8	17.5	20.2	26.2	17	30	31
ZSP-L10-10		R3/8	12	37	39.4	16.8	17.5	20.2	26.2	17	30	39
ZSP-L10-15		R1/2	15	40	40.6	16.8	17.5	20.2	26.2	21	30	59
ZSP-L12-8	12	R1/4	11	38	42.5	19.8	21	23.4	29.4	21	30	47
ZSP-L12-10		R3/8	12	39	43.2	19.8	21	23.4	29.4	21	47	48
ZSP-L12-15		R1/2	15	42	44.3	19.8	21	23.4	29.4	21	47	63

Note) The G dimensions for the taper screw type are reference dimensions after tightening.

Union Elbow

● ZSP-V□

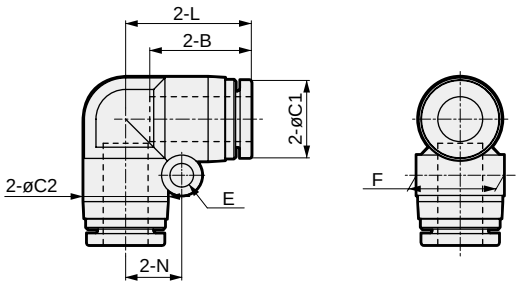

Model No.	Tube O.D. ø	C1	C2	B	L	E	N	F	Eff. X-sectional area mm²	Wt. g
ZSP-V4	4	9.9	10	14.9	16.9	3.2	6.5	10.4	4.2	4.7
ZSP-V6	6	11.8	12.5	17	20.1	3.2	8	13.5	10	6.9
ZSP-V8	8	13.8	15	18.1	22.4	4.2	10	15.6	16.5	11
ZSP-V10	10	16.8	17.5	20.2	26.2	4.2	12	18.2	30	16
ZSP-V12	12	19.8	21	23.4	29.4	4.2	14	21.7	47	24

Dimensions

Tee

● ZSP-B□-□

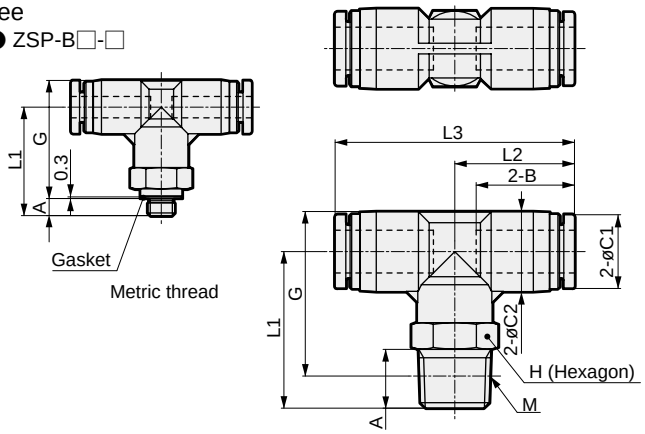

Model No.	Tube O.D. ø	M	A	L1	G	C1	C2	B	L2	L3	H	Eff. X-sectional area mm²	Wt. g
ZSP-B4-M5	4	M5×0.8	3.2	20.2	22	9.9	10	14.9	16.9	33.8	10	1.5	9.4
ZSP-B4-6		R1/8	8	23.2	24.2	9.9	10	14.9	16.9	33.8	10	4.1	13
ZSP-B4-8		R1/4	11	26.2	25.2	9.9	10	14.9	16.9	33.8	14	4.1	21
ZSP-B6-M5	6	M5×0.8	3.2	23	26.3	11.8	13	17	20.15	40.3	12	1.5	15
ZSP-B6-6		R1/8	8	26	28.5	11.8	13	17	20.15	40.3	12	10	17
ZSP-B6-8		R1/4	11	29	29.5	11.8	13	17	20.15	40.3	14	10	24
ZSP-B6-10		R3/8	12	30.8	31	11.8	13	17	20.15	40.3	17	10	36
ZSP-B8-6	8	R1/8	8	26.3	29.8	13.8	15	18.1	22.4	44.8	14	16.5	21
ZSP-B8-8		R1/4	11	29.3	30.8	13.8	15	18.1	22.4	44.8	14	16.5	26
ZSP-B8-10		R3/8	12	31.1	32.3	13.8	15	18.1	22.4	44.8	17	16.5	38
ZSP-B10-6	10	R1/8	8	33	37.8	16.8	17.5	20.2	25.2	50.4	17	30	36
ZSP-B10-8		R1/4	11	36	38.7	16.8	17.5	20.2	25.2	50.4	17	30	38
ZSP-B10-10		R3/8	12	37	39.4	16.8	17.5	20.2	25.2	50.4	17	30	46
ZSP-B10-15		R1/2	15	40	40.6	16.8	17.5	20.2	25.2	50.4	21	30	65
ZSP-B12-8	12	R1/4	11	38	42.5	19.8	21	22.9	28.4	56.8	21	30	56
ZSP-B12-10		R3/8	12	39	43.2	19.8	21	22.9	28.4	56.8	21	47	58
ZSP-B12-15		R1/2	15	42	44.3	19.8	21	22.9	28.4	56.8	21	47	73

Note) The G dimensions for the taper screw type are reference dimensions after tightening.

Union tee

[Sales unit is 10 pcs./bag]

● ZSP-E□

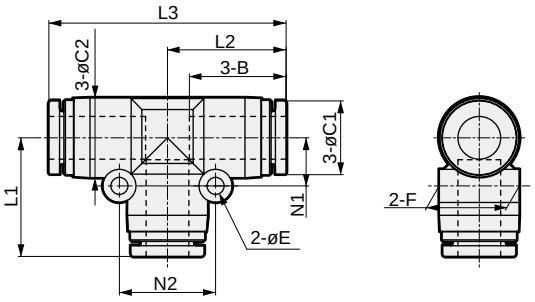

Model No.	Tube O.D. ø	C1	C2	B	L2	L3	E	N1	N2	L1	F	Eff. X-sectional area mm²	Wt. g
ZSP-E4	4	9.9	10.4	14.9	17.2	34.4	3.2	6.5	13	17.2	10	5.3	7.1
ZSP-E6	6	11.8	13	17	20.05	40.1	3.2	8	16	20.1	13.5	12.5	11
ZSP-E8	8	13.8	15	18.1	22.2	44.4	3.2	9	18	22.2	15.6	20	15
ZSP-E10	10	16.8	17.5	20.2	25.2	50.4	4.2	12	24	25.2	18.2	35	24
ZSP-E12	12	19.8	21	22.9	28.4	56.8	4.2	14	28	28.2	21.7	59	34

Different diameter union straight

● ZSP-G□-□

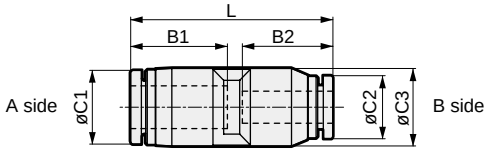

Model No.	Tube O.D. ø		L	C1	C2	C3	B1	B2	Eff. X-sectional area mm²	Wt. g
	A side	B side								
ZSP-G6-4	6	4	34.4	11.8	9.9	12.5	17	14.9	5.3	6
ZSP-G8-6	8	6	37.9	13.8	11.8	14.5	18.1	17	12.5	8.3
ZSP-G10-8	10	8	41.1	16.8	13.8	17.5	20.2	18.1	20	14
ZSP-G12-10	12	10	47.6	19.8	16.8	21	23.4	20.2	35	20

Branch tee

● ZSP-D□-□

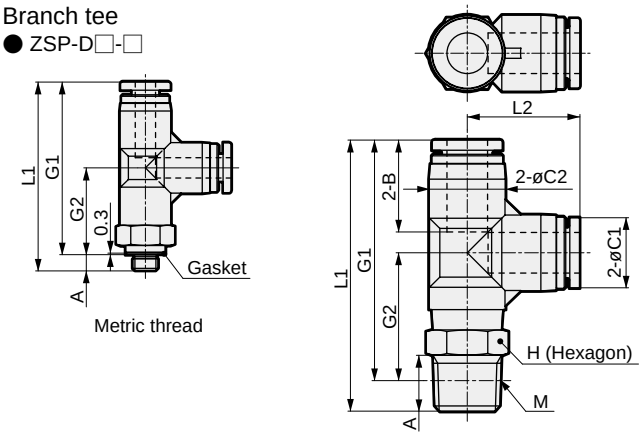

Model No.	Tube O.D. ø	M	A	L1	G1	G2	C1	C2	B	L2	H	Eff. X-sectional area mm²	Wt. g
ZSP-D4-M5	4	M5×0.8	3.2	37.1	33.9	17	9.9	10	14.9	16.9	10	1.9	9.4
ZSP-D4-6		R1/8	8	40.1	36.1	19.2	9.9	10	14.9	16.9	10	5.3	13
ZSP-D4-8		R1/4	11	43.1	37.1	20.2	9.9	10	14.9	16.9	14	5.3	21
ZSP-D6-M5	6	M5×0.8	3.2	43.2	40	19.8	11.8	13	17	20.1	12	1.9	15
ZSP-D6-6		R1/8	8	46.2	42.2	22	11.8	13	17	20.1	12	12.5	17
ZSP-D6-8		R1/4	11	49.2	43.1	23	11.8	13	17	20.1	14	12.5	24
ZSP-D6-10		R3/8	12	51	44.6	24.5	11.8	13	17	20.1	17	12.5	35
ZSP-D8-6	8	R1/8	8	50.4	46.4	24.2	13.8	15	18.1	22.2	14	20	21
ZSP-D8-8		R1/4	11	53.4	47.4	25.2	13.8	15	18.1	22.2	14	20	27
ZSP-D8-10		R3/8	12	55.2	48.9	26.7	13.8	15	18.1	22.2	17	20	38
ZSP-D10-6	10	R1/8	8	58.2	54.2	29	16.8	17.5	20.2	25.2	17	35	36
ZSP-D10-8		R1/4	11	61.2	55.2	30	16.8	17.5	20.2	25.2	17	35	38
ZSP-D10-10		R3/8	12	62.2	55.9	30.7	16.8	17.5	20.2	25.2	17	35	46
ZSP-D10-15		R1/2	15	65.2	57	31.8	16.8	17.5	20.2	25.2	21	35	65
ZSP-D12-8	12	R1/4	11	66.6	60.6	32.2	19.8	21	22.9	28.2	21	35	57
ZSP-D12-10		R3/8	12	67.6	61.3	32.9	19.8	21	22.9	28.2	21	59	58
ZSP-D12-15		R1/2	15	70.6	62.4	34	19.8	21	22.9	28.2	21	59	72

Note) The G1 and G2 dimensions for the taper screw type are reference dimensions after tightening.

Dimensions

Tripod elbow

● ZSP-VX□-□

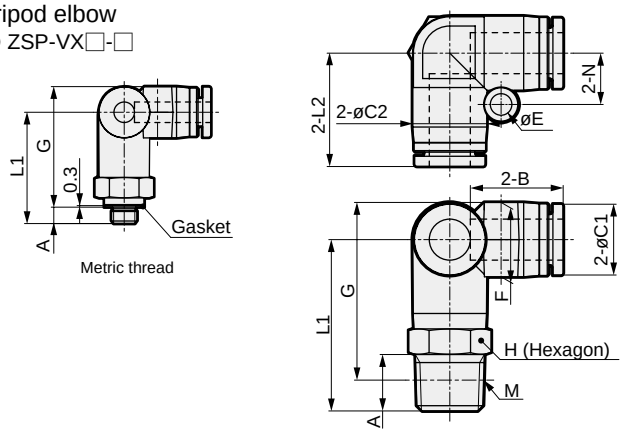

Model No.	Tube O.D. ø	M	A	L1	G	C1	C2	B	L2	H	E	N	F	Eff. X-sectional area mm²	Wt. g
ZSP-VX4-M5	4	M5×0.8	3.2	21.7	23.5	9.9	10	14.9	16.9	10	3.2	6.5	10	2.3	11
ZSP-VX4-6		R1/8	8	24.7	25.7	9.9	10	14.9	16.9	10	3.2	6.5	10	4	14
ZSP-VX4-8		R1/4	11	27.7	26.7	9.9	10	14.9	16.9	14	3.2	6.5	10	3.5	23
ZSP-VX6-M5	6	M5×0.8	3.2	25.3	28.4	11.8	12.5	17	20.1	12	4.2	8	12.5	2.3	17
ZSP-VX6-6		R1/8	8	28.3	30.6	11.8	12.5	17	20.1	12	4.2	8	12.5	8.5	18
ZSP-VX6-8		R1/4	11	31.3	31.5	11.8	12.5	17	20.1	14	4.2	8	12.5	8	26
ZSP-VX6-10		R3/8	12	33.1	33	11.8	12.5	17	20.1	17	4.2	8	12.5	8.4	39
ZSP-VX8-6	8	R1/8	8	30.4	33.7	13.8	14.5	18.1	22.1	14	4.2	10	14.5	17.1	24
ZSP-VX8-8		R1/4	11	33.4	34.6	13.8	14.5	18.1	22.1	14	4.2	10	14.5	17.5	30
ZSP-VX8-10		R3/8	12	35.2	36.1	13.8	14.5	18.1	22.1	17	4.2	10	14.5	17.4	42
ZSP-VX10-6	10	R1/8	8	35.2	40	16.8	17.5	20.2	26.2	17	4.2	12	17.5	17.4	38
ZSP-VX10-8		R1/4	11	38.2	40.9	16.8	17.5	20.2	26.2	17	4.2	12	17.5	31.5	44
ZSP-VX10-10		R3/8	12	39.2	41.6	16.8	17.5	20.2	26.2	17	4.2	12	17.5	28.1	52
ZSP-VX10-15		R1/2	15	42.2	42.8	16.8	17.5	20.2	26.2	21	4.2	12	17.5	24.3	74
ZSP-VX12-8	12	R1/4	11	41.2	45.7	19.8	21	23.4	29.4	21	4.2	14	21	40.9	64
ZSP-VX12-10		R3/8	12	42.2	46.4	19.8	21	23.4	29.4	21	4.2	14	21	45	65
ZSP-VX12-15		R1/2	15	45.2	47.5	19.8	21	23.4	29.4	21	4.2	14	21	44.8	81

Note) The G dimensions for the taper screw type are reference dimensions after tightening.

Union Y

[Sales unit is 10 pcs./bag]

● ZSP-Y□

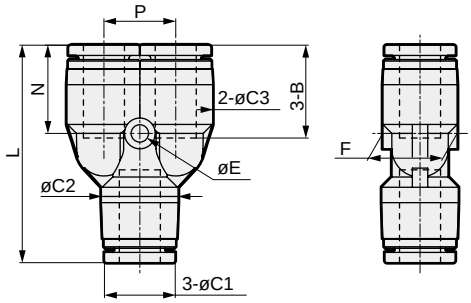

Model No.	Tube O.D. ø	L	C1	C2	C3	B	P	E	N	F	Eff. X-sectional area mm²	Wt. g
ZSP-Y4	4	32.8	9.9	10	10	14.9	11	3.2	14.1	10.4	4.2	7.6
ZSP-Y6	6	37.7	11.8	13	12.5	17	12	3.4	15.8	13.5	10	10
ZSP-Y8	8	42.4	13.8	15	14.5	18.1	14	3.4	17.2	15.1	16.5	15
ZSP-Y10	10	48.4	16.8	17.5	17.5	20.7	18	4.2	19.5	18.2	27	25
ZSP-Y12	12	54.8	19.8	21	21	23.4	20	4.2	22.2	21.7	38	35

Different diameter Union tee

● ZSP-EG□-□

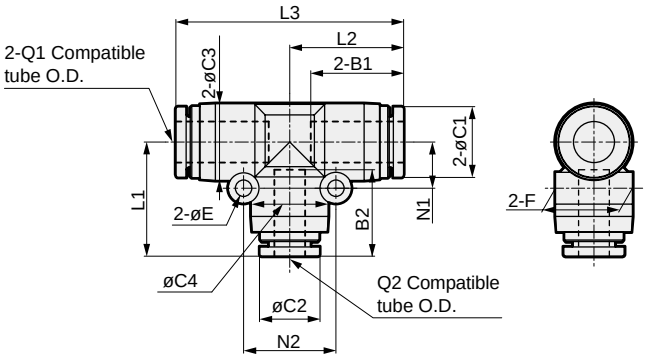

Model No.	Tube O.D. ø		C1	C2	C3	C4	B1	B2	L2	L3	E	N1	N2	L1	F	Eff. X-sectional area mm²	Wt. g
	Q1	Q2															
ZSP-EG6-4	6	4	11.8	9.9	13	13	17	14.9	20.05	40.1	3.2	8	16	19.5	13.5	4.1	11
ZSP-EG8-6	8	6	13.8	11.8	14.5	12.5	18.1	17	22.2	44.4	3.2	9	18	22.3	15.1	9.5	14
ZSP-EG10-8	10	8	16.8	13.8	17.5	14.5	20.2	18.1	25.2	50.4	4.2	12	24	24.9	18.2	18.5	23
ZSP-EG12-10	12	10	19.8	16.8	21	17.5	23.4	20.2	28.4	56.8	4.2	14	28	28	21.7	29.5	34

Branch Y

● ZSP-X□-□

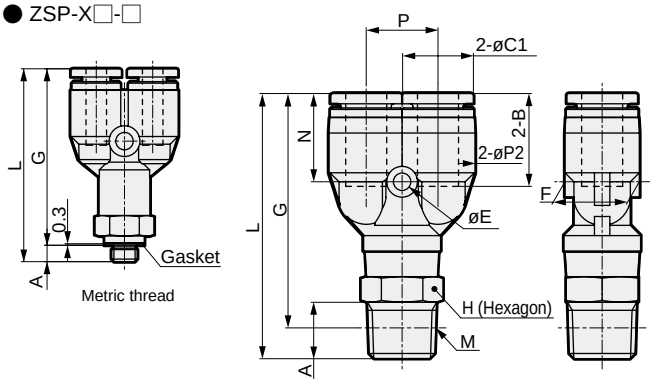

Model No.	Tube O.D. ø	M	A	L	G	C1	C2	B	P	E	N	H	F	Eff. X-sectional area mm²	Wt. g
ZSP-X4-M5	4	M5×0.8	3.2	37.6	34.4	9.9	10	14.9	11	3.2	14.1	10	10.4	1.5	9.9
ZSP-X4-6		R1/8	8	40.6	36.6	9.9	10	14.9	11	3.2	14.1	10	10.4	4.2	13
ZSP-X4-8		R1/4	11	43.6	37.6	9.9	10	14.9	11	3.2	14.1	14	10.4	4.2	21
ZSP-X6-M5	6	M5×0.8	3.2	41.4	38.2	11.8	12.5	17	12	3.4	15.8	12	13.5	1.5	15
ZSP-X6-6		R1/8	8	44.4	40.4	11.8	12.5	17	12	3.4	15.8	12	13.5	10	17
ZSP-X6-8		R1/4	11	47.4	41.3	11.8	12.5	17	12	3.4	15.8	14	13.5	10	24
ZSP-X6-10		R3/8	12	49.2	42.8	11.8	12.5	17	12	3.4	15.8	17	13.5	10	36
ZSP-X8-6	8	R1/8	8	48.7	44.7	13.8	14.5	18.1	14	3.4	17.2	14	15.1	16.5	22
ZSP-X8-8		R1/4	11	51.7	45.7	13.8	14.5	18.1	14	3.4	17.2	14	15.1	16.5	27
ZSP-X8-10		R3/8	12	53.5	47.2	13.8	14.5	18.1	14	3.4	17.2	17	15.1	16.5	39
ZSP-X10-6	10	R1/8	8	55.3	51.3	16.8	18	20.7	18	4.5	19.5	17	18	30	38
ZSP-X10-8		R1/4	11	58.3	52.3	16.8	18	20.7	18	4.5	19.5	17	18	30	40
ZSP-X10-10		R3/8	12	59.3	53	16.8	18	20.7	18	4.5	19.5	17	18	30	48
ZSP-X10-15		R1/2	15	62.3	54.1	16.8	18	20.7	18	4.5	19.5	21	18	30	67
ZSP-X12-8	12	R1/4	11	63.5	57.5	19.8	21	23.4	20	4.2	22.2	21	21	37	59
ZSP-X12-10		R3/8	12	64.5	58.2	19.8	21	23.4	20	4.2	22.2	21	21	37	61
ZSP-X12-15		R1/2	15	67.5	59.3	19.8	21	23.4	20	4.2	22.2	21	21	37	75

Note) The G dimensions for the taper screw type are reference dimensions after tightening.

Dimensions CAD

Branch double Y

● ZSP-RX□-□

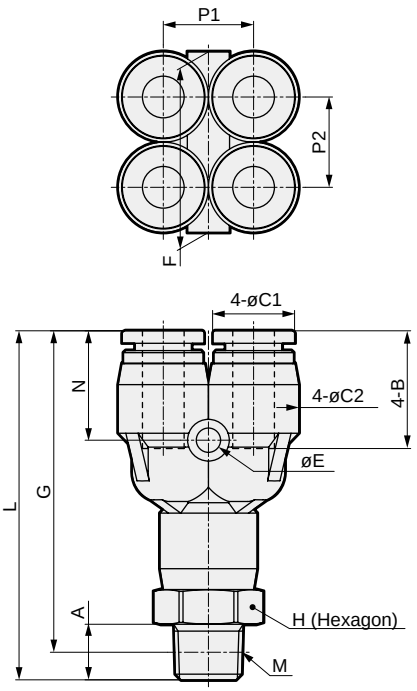

Model No.	Tube O.D. ø	M	A	L	G	C1	C2	B	P1	P2	H	E	N	F	Eff. X-sectional area mm²	Wt. g
ZSP-RX4-6	4	R1/8	8	45.7	41.7	9.9	10.5	14.9	10	10	12	3.2	14.2	20.5	1.5	20
ZSP-RX4-8	4	R1/4	11	48.7	42.7	9.9	10.5	14.9	10	10	14	3.2	14.2	20.5	1.4	27
ZSP-RX6-6	6	R1/8	8	50.3	46.3	11.8	13	17	13	13	14	3.2	15.8	26	9	27

Note) The G dimensions are reference dimensions after tightening.

Different diameter double Y

[Sales unit is 10 pcs./bag]

● ZSP-RG□-□

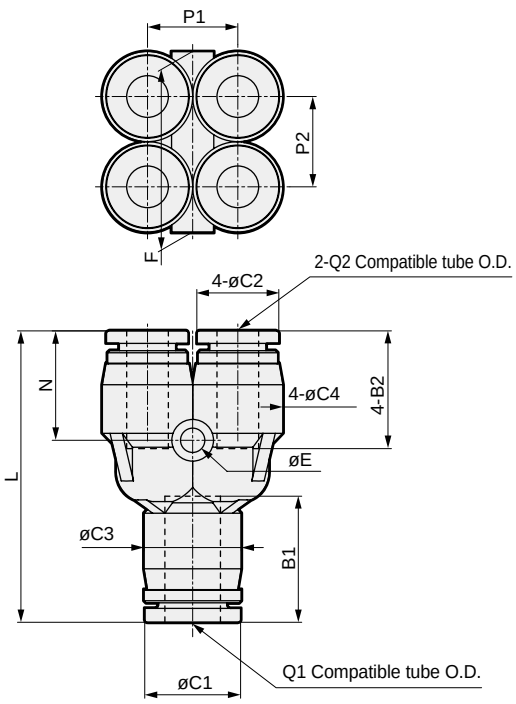

Model No.	Tube O.D. ø		L	C1	C2	C3	C4	B1	B2	P1	P2	E	N	F	Eff. X-sectional area mm²	Wt. g
	Q1	Q2														
ZSP-RG6-4	6	4	37.5	11.8	9.9	12.5	10.5	17	14.9	10.3	10.3	3.2	14.2	21.3	1.5	13
ZSP-RG8-6	8	6	42	13.8	11.8	14.5	13	18.1	17	12.5	12.5	3.5	15.8	26	8.2	20

Tripod union

● ZSP-VU□

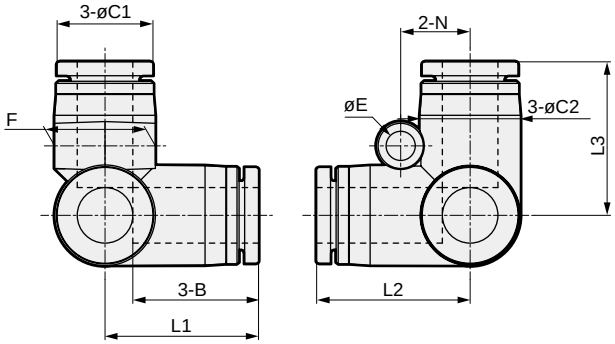

Model No.	Tube O.D. ø	C1	C2	B	L1	L2	L3	E	N	F	Eff. X-sectional area mm²	Wt. g
ZSP-VU4	4	9.9	10	14.9	17.8	17.8	17.8	3.2	6.5	10.4	3.7	7
ZSP-VU6	6	11.8	12.5	17	20.5	20.5	20.5	4.2	8	12.5	8.3	9.8
ZSP-VU8	8	13.8	14.5	18.1	22.7	22.7	22.7	4.2	10	14.5	16	15
ZSP-VU10	10	16.8	17.5	20.2	26.2	26.2	26.2	4.2	12	17.5	30.2	24
ZSP-VU12	12	19.8	21	23.4	29.4	29.4	29.4	4.2	14	21	40.2	34

Different diameter Union Y

● ZSP-W□-□

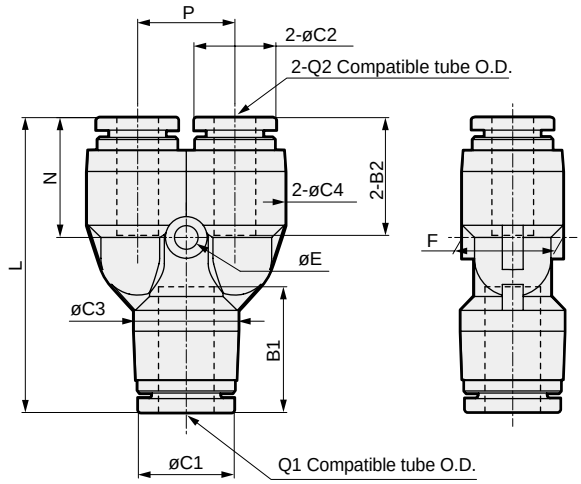

Model No.	Tube O.D. ø		L	C1	C2	C3	C4	B1	B2	P	E	N	F	Eff. X-sectional area mm²	Wt. g
	Q1	Q2													
ZSP-W6-4	6	4	37.2	11.8	9.9	13	12.5	17	14.9	12	3.4	15.2	13.5	4.2	9.7
ZSP-W8-6	8	6	42.5	13.8	11.8	14.5	12.5	18.1	17	14	3.4	17.3	15.1	8	13
ZSP-W10-8	10	8	48.1	16.8	13.8	17.5	14.5	20.2	18.1	18	4.5	19.2	18.2	15.9	20
ZSP-W12-10	12	10	54.6	19.8	16.8	21	17.5	23.4	20.2	20	4.5	22	21.7	26.7	30

Dimensions CAD

Union A

● ZSP-AU□

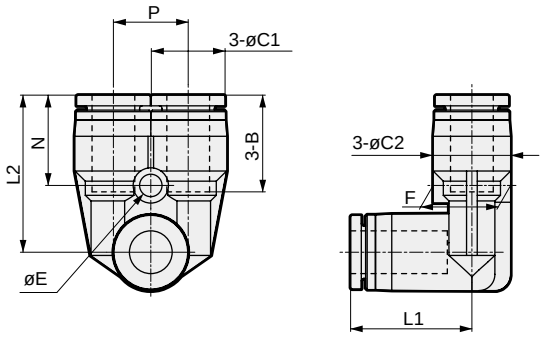

Model No.	Tube O.D. ø	L1	C1	C2	B	P	L2	E	N	F	Eff. X-sectional area mm²	Wt. g
ZSP-AU4	4	16.9	9.9	10	14.9	10.3	22.7	3.2	14.2	10.4	2.5	7.8
ZSP-AU6	6	19.8	11.8	12.5	17	12.5	26.2	4.2	15.5	13.5	7.2	11
ZSP-AU8	8	22.7	13.8	14.5	18.1	14.5	29.4	4.2	16.9	15.6	16.3	16
ZSP-AU10	10	25	16.8	17.5	20.2	17.5	33.5	4.2	18.5	18.2	27.9	26
ZSP-AU12	12	29.4	19.8	21	23.4	21	35.2	4.2	20.4	21.7	40	37

Branch elbow

[Sales unit is 10 pcs./bag]

● ZSP-AX□-□

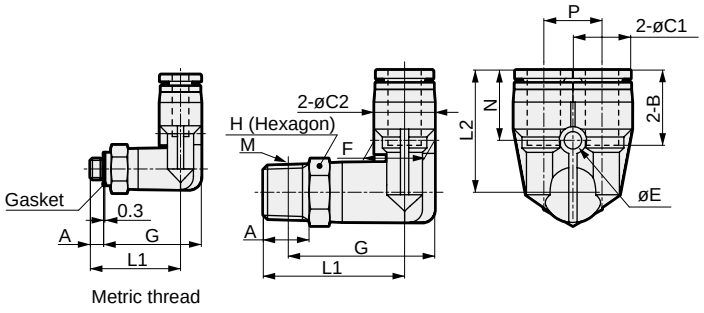

Model No.	Tube O.D. ø	M	A	L1	G	C1	C2	B	P	L2	H	E	N	F	Eff. X-sectional area mm²	Wt. g
ZSP-AX4-M5	4	M5×0.8	3.2	21.7	23.5	9.9	10	14.9	11	22.7	10	3.2	14.2	10	2.2	11
ZSP-AX4-6		R1/8	8	24.7	25.7	9.9	10	14.9	11	22.7	10	3.2	14.2	10	2.7	14
ZSP-AX4-8		R1/4	11	27.7	26.7	9.9	10	14.9	11	22.7	14	3.2	14.2	10	2.5	22
ZSP-AX6-M5	6	M5×0.8	3.2	25	28.1	11.8	12.5	17	12	26.2	12	4.2	15.5	12.5	2.2	16
ZSP-AX6-6		R1/8	8	28	30.3	11.8	12.5	17	12	26.2	12	4.2	15.5	12.5	6.9	18
ZSP-AX6-8		R1/4	11	31	31.2	11.8	12.5	17	12	26.2	14	4.2	15.5	12.5	6.6	25
ZSP-AX6-10		R3/8	12	32.8	32.7	11.8	12.5	17	12	26.2	17	4.2	15.5	12.5	6.8	37
ZSP-AX8-6	8	R1/8	8	31	34.3	13.8	14.5	18.1	14	29.4	14	4.2	16.9	14.5	14.6	23
ZSP-AX8-8		R1/4	11	34	35.2	13.8	14.5	18.1	14	29.4	14	4.2	16.9	14.5	14.5	29
ZSP-AX8-10		R3/8	12	35.8	36.7	13.8	14.5	18.1	14	29.4	17	4.2	16.9	14.5	15	40
ZSP-AX10-6	10	R1/8	8	34	38.8	16.8	17.5	20.2	18	33.5	17	4.2	18.5	17.5	21.6	40
ZSP-AX10-8		R1/4	11	37	39.7	16.8	17.5	20.2	18	33.5	17	4.2	18.5	17.5	26.1	42
ZSP-AX10-10		R3/8	12	38	40.4	16.8	17.5	20.2	18	33.5	17	4.2	18.5	17.5	27.2	49
ZSP-AX10-15		R1/2	15	41	41.6	16.8	17.5	20.2	18	33.5	21	4.2	18.5	17.5	29.9	69
ZSP-AX12-8	12	R1/4	11	41.2	45.7	19.8	21	23.4	20	35.2	21	4.2	20.4	21	38.2	62
ZSP-AX12-10		R3/8	12	42.2	46.4	19.8	21	23.4	20	35.2	21	4.2	20.4	21	43.1	63
ZSP-AX12-15		R1/2	15	45.2	47.5	19.8	21	23.4	20	35.2	21	4.2	20.4	21	42.1	78

Note) The G dimensions for the taper screw type are reference dimensions after tightening.

Branch triple

● ZSP-KD□-□-□

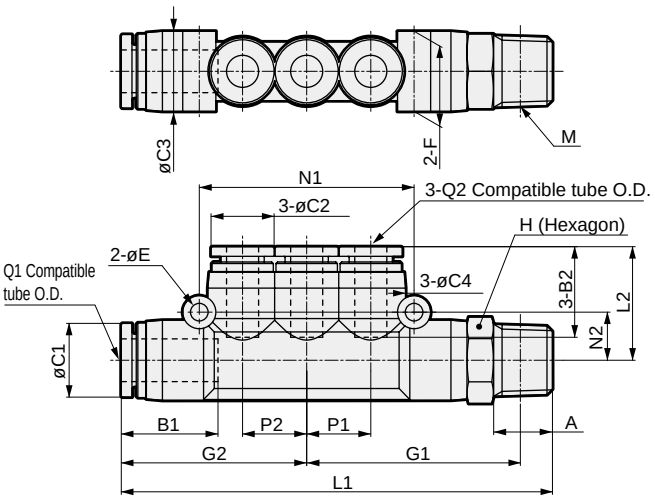

Model No.	Tube O.D. ø		M	A	L1	L2	G1	G2	P1	P2	C1	C2
	Q1	Q2										
ZSP-KD6-4-6	6	4	R1/8	8	68.4	18.4	34.3	30.1	10	10	11.8	9.9
ZSP-KD8-4-8	8	4	R1/4	11	73.7	19.2	36.5	31.2	10	10	13.8	9.9
ZSP-KD8-6-8	8	6	R1/4	11	80.7	21.3	40	34.7	12	12	13.8	11.8
ZSP-KD10-8-10	10	8	R3/8	12	93	23.7	46.7	40	14	14	16.8	13.8

Model No.	C3	C4	B1	B2	N1	N2	E	H	F	Eff. X-sectional area mm²	Wt. g
ZSP-KD6-4-6	13	10	17	14.9	34	8	3.3	12	13	5	22
ZSP-KD8-4-8	15	10	18.1	14.9	34	9.2	3.3	14	15	5.2	31
ZSP-KD8-6-8	15	13	18.1	17	40.2	9	3.3	14	15	9.6	34
ZSP-KD10-8-10	17.5	15	20.7	18.1	46.2	10.5	3.3	17	17.5	19.1	55

Note) The G1 dimensions are reference dimensions after tightening.

Different diameter triple

● ZSP-KG□-□

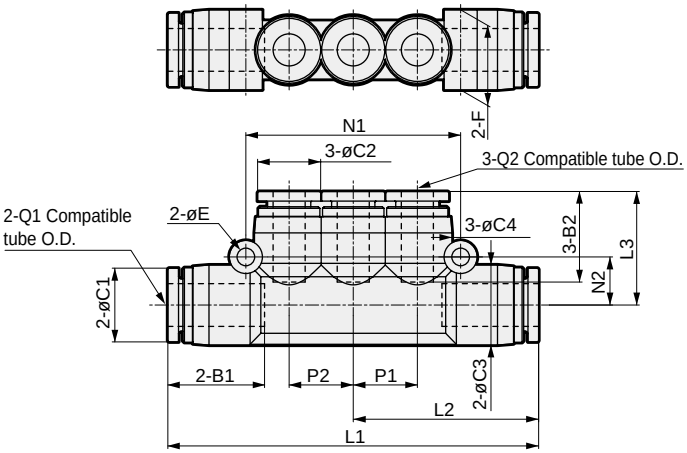

Model No.	Tube O.D. ø		L1	L2	L3	P1	P2	C1	C2	C3
	Q1	Q2								
ZSP-KG6-4	6	4	60.1	30.05	18.4	10	10	11.8	9.9	13
ZSP-KG8-4	8	4	62.4	31.2	19.2	10	10	13.8	9.9	15
ZSP-KG8-6	8	6	69.4	34.7	21.3	12	12	13.8	11.8	15
ZSP-KG10-6	10	6	80	40	23.8	14	14	16.8	11.8	17.5
ZSP-KG10-8	10	8	80	40	23.7	14	14	16.8	13.8	17.5

Model No.	C4	B1	B2	N1	N2	E	2-F	Eff. X-sectional area mm²	Wt. g
ZSP-KG6-4	10	17	14.9	34	8	3.3	13	5	15
ZSP-KG8-4	10	18.1	14.9	34	9.2	3.3	15	6	19
ZSP-KG8-6	13	18.1	17	40.2	9	3.3	15	10.1	22
ZSP-KG10-6	15	20.7	17	46.2	10.5	3.3	17.5	11.2	30
ZSP-KG10-8	15	20.7	18.1	46.2	10.5	3.3	17.5	19.1	32

Dimensions CAD

Cap

● ZSP-PF□

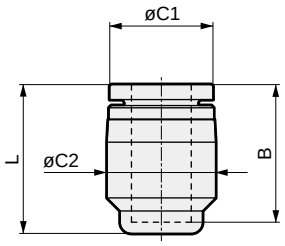

Model No.	Tube O.D. ø	L	C1	C2	B	Wt. g
ZSP-PF4	4	16.4	9.9	10	14.9	2.2
ZSP-PF6	6	18.5	11.8	12.5	17	3.1
ZSP-PF8	8	19.9	13.8	14.5	18.4	4.4
ZSP-PF10	10	22.3	16.8	17.5	20.7	7.3
ZSP-PF12	12	24.9	19.8	21	22.9	11

Bulkhead union

[Sales unit is 10 pcs./bag]

● ZSP-M□

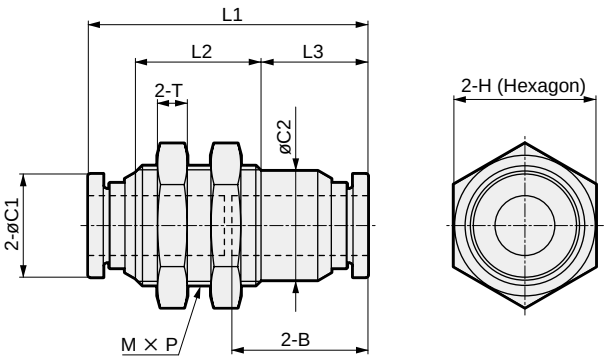

Model No.	Tube O.D. ø	M×P	L1	L3	L2	C1	C2	B	H	T	Eff. X-sectional area mm²	Wt. g
ZSP-M4	4	M12X1	30.8	10.4	15	9.9	10.8	14.9	14	4	5.3	16
ZSP-M6	6	M14X1	34.9	11	18	11.8	12.5	17	17	4	12.5	24
ZSP-M8	8	M16X1	37.4	14.3	16.8	13.8	14.6	18.2	19	4	20	30
ZSP-M10	10	M20X1	42.4	12.7	23	16.8	18.5	20.7	24	5	35	56
ZSP-M12	12	M22X1	47.6	12.3	29	19.8	20.4	23.3	27	6	71	81

Reducer

● ZSP-J□-□

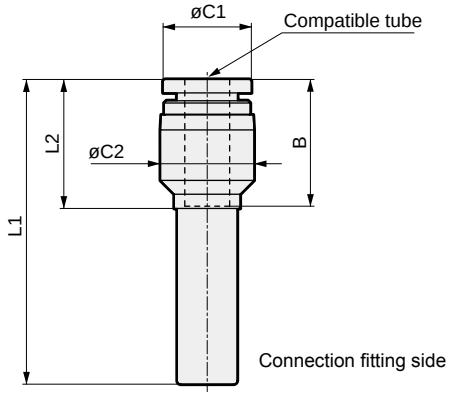

Model No.	Tube O.D. ø	Port size ø	L1	L2	C1	C2	B	Eff. X-sectional area mm²	Wt. g
ZSP-J4-6	6	4	38.8	19.8	11.8	12.5	17	4	3.5
ZSP-J6-4	4	6	37.7	15.2	9.9	10	14.9	5	2.9
ZSP-J8-4	4	8	40.2	16.7	9.9	12.5	14.9	4.5	3.8
ZSP-J8-6	6	8	40.8	17.3	11.8	12.5	17	11.5	4
ZSP-J10-4	4	10	42.2	17.2	9.9	12.5	14.9	4.5	4.3
ZSP-J10-6	6	10	43.8	18.8	11.8	12.5	17	11.5	4.5
ZSP-J10-8	8	10	43.7	18.7	13.8	14.5	18.1	22.5	5.8
ZSP-J12-6	6	12	48.8	19.8	11.8	14.5	17	10.5	6
ZSP-J12-8	8	12	49.7	20.7	13.8	14.5	18.1	23	6.7
ZSP-J12-10	10	12	50	21	16.8	17.5	20.2	31.5	9.6

ZJ

Tightening fitting, stainless steel series

Port size: R1/8 to R1/2

Single straight
ZJ-S□-□

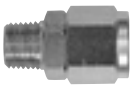

Compatible tube O.D. ø
4
6
8
10
12

·Refer to page: 860

Single elbow
ZJ-L□-□



Compatible tube O.D. ø
4
6
8
10
12

·Refer to page: 860

Double tee
ZJ-T□-□

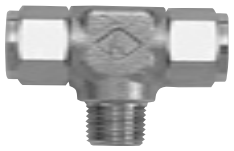

Compatible tube O.D. ø
4
6
8
10
12

·Refer to page: 861

D tee
ZJ-T□-□-D

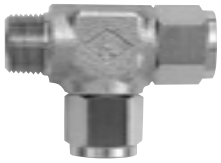

Compatible tube O.D. ø
4
6
8
10
12

·Refer to page: 861

Straight
ZJ-S□-0



Compatible tube O.D. ø
4
6
8
10
12

·Refer to page: 862

Tee
ZJ-T□-0

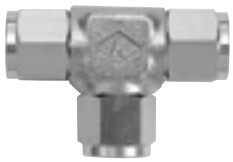

Compatible tube O.D. ø
4
6
8
10
12

·Refer to page: 862

Sleeve integrated with nut ZJ-N□



Compatible tube O.D. ø
4
6
8
10
12

·Refer to page: 862

· Sales unit is 1 pc./bag.

Stainless steel, tightening fitting —— ZJ Series.

High sealing performance; repeated use possible.

Port size: R1/8 to R1/2

Compatible tube O.D.: ø4 to ø12

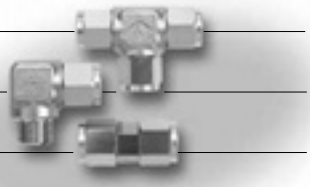

- Easy-to-fit mechanism (integrated nut and sleeve) has improved work efficiency.
- Original sleeve eliminates tubing torsion during piping.
- Sleeve need not be replaced even when used repeatedly.
- Smooth inner bore surface.
- Ample size variations fit various tubing.
- Oil can be cleaned off.

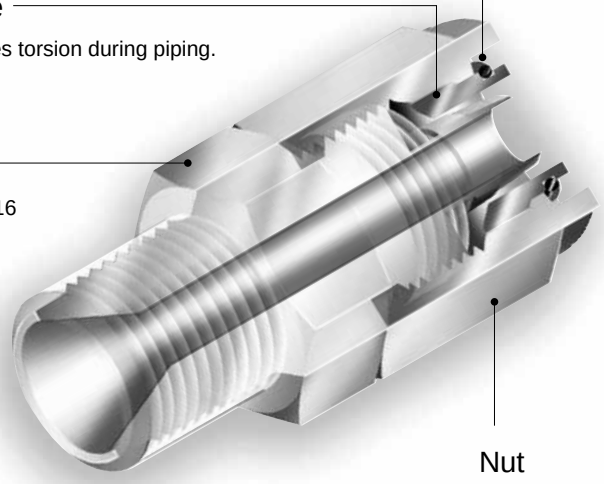

Stop ring

Resolves trouble such as lost sleeves and incorrect installation direction.

Sleeve

Eliminates torsion during piping.

Body

High corrosion resistant SUS316 stainless steel is incorporated for body, nut, and sleeve.

Nut

Structure integrated with sleeve shortens installation and removal work.

Stainless steel, tightening fitting

ZJ Series

CKD

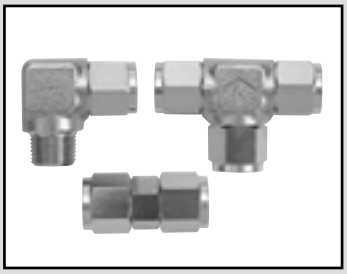

Tightening fitting, stainless steel series

ZJ Series

- Port size: R1/8 to R1/2
- Compatible tube: ø4 to ø12

RoHS

Specifications

Item		Description
Working fluid		Compressed air, inert gas
Working pressure	MPa	1.0 (≈150 psi, 10 bar) or less
Negative pressure	kPa	-100 (≈-15 psi, -1 bar)
Ambient temperature	°C	-10 (14°F) to 60 (140°F)
Tube used	*1	Urethane tube (U-92**, U-95**, NU-**)
		Eco-flex tube (ecos-*x*, ecoh-*x*)

*1: Refer to page 902 for details on tubes.

How to order

* Refer to model No. sections on dimensions page for combination of model No.

ZJ - T 06 04 - 0 - D
(A) (B) (C) (D) (E)

(A) Shape	
S	Straight
L	Elbow
T	Tee
N	Sleeve integrated nut

(B) Compatible tube O.D.	
04	ø4
06	ø6
08	ø8
10	ø10
12	ø12

(C) Compatible tube I.D.	
25	ø2.5
04	ø4
05	ø5
06	ø6
65	ø6.5
75	ø7.5
08	ø8
09	ø9
10	ø10

(D) Port size	
6	R1/8
8	R1/4
10	R3/8
15	R1/2
0	No thread

(E) Other combinations	
D	D type

Clean-room specifications (Catalog No. CB-033SA)

Note: Sales unit is 1 pc.

ZJ.....- P90

Internal structure and main parts list

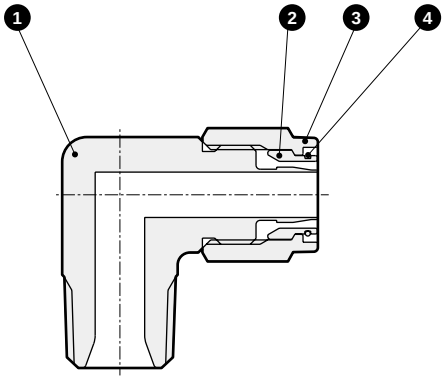

No.	Part name	Material
1	Body	Stainless steel (SUS316)
2	Sleeve	Stainless steel (SUS316)
3	Nut	Stainless steel (SUS316) (electroless nickel plated)
4	Stop ring	Stainless steel (SUS304)

Dimensions

Single straight
● ZJ-S□□-□

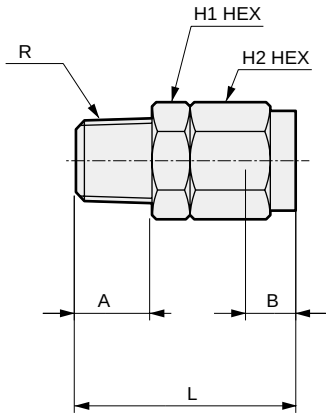

Single elbow
● ZJ-L□□-□

[Sales unit is 1 pc./bag]

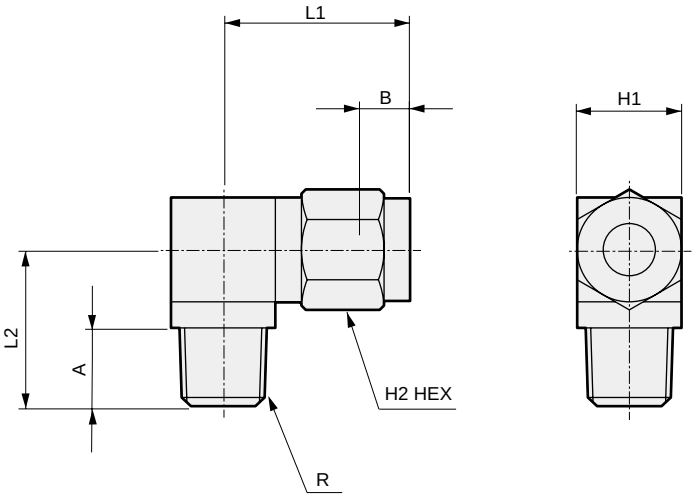

Model No.	Tube O.D. ø	R	L	A	B	Min. bore size	H1	H2	Wt. g
ZJ-S0425- 6	4	1/8	24	9	6	1.9	10	10	12
ZJ-S0425- 8		1/4	26	11	6	1.9	14	10	19
ZJ-S0604- 6	6	1/8	26	9	7	3.4	12	12	16
ZJ-S0604- 8		1/4	28.5	11	7	3.4	14	12	23
ZJ-S0604-10		3/8	30	12	7	3.4	17	12	34
ZJ-S0805- 6	8	1/8	28	9	7.5	4.4	14	14	22
ZJ-S0806- 6		1/8	28	9	7.5	5.4	14	14	21
ZJ-S0805- 8		1/4	30	11	7.5	4.4	14	14	27
ZJ-S0806- 8		1/4	30	11	7.5	5.4	14	14	26
ZJ-S0805-10		3/8	31	12	7.5	4.4	17	14	37
ZJ-S0806-10		3/8	31	12	7.5	5.4	17	14	36
ZJ-S1065- 8	10	1/4	32	11	8	5.9	17	17	39
ZJ-S1075- 8		1/4	32	11	8	6.9	17	17	36
ZJ-S1008- 8		1/4	32	11	8	7.4	17	17	36
ZJ-S1065-10		3/8	33	12	8	5.9	17	17	45
ZJ-S1075-10		3/8	33	12	8	6.9	17	17	43
ZJ-S1008-10		3/8	33	12	8	7.4	17	17	43
ZJ-S1065-15		1/2	36	15	8	5.9	22	17	67
ZJ-S1075-15		1/2	36	15	8	6.9	22	17	65
ZJ-S1008-15		1/2	36	15	8	7.4	22	17	64
ZJ-S1208- 8	12	1/4	34	11	9.5	7.2	17	19	44
ZJ-S1209- 8		1/4	34	11	9.5	7.9	17	19	42
ZJ-S1210- 8		1/4	34	11	9.5	7.9	17	19	43
ZJ-S1208-10		3/8	35	12	9.5	7.2	17	19	50
ZJ-S1209-10		3/8	35	12	9.5	8.2	17	19	48
ZJ-S1210-10		3/8	35	12	9.5	9.2	17	19	46
ZJ-S1208-15		1/2	38	15	9.5	7.2	22	19	72
ZJ-S1209-15		1/2	38	15	9.5	8.2	22	19	70
ZJ-S1210-15		1/2	38	15	9.5	9.2	22	19	68

Model No.	Tube O.D. ø	R	L1	L2	A	B	Min. bore size	H1	H2	Wt. g
ZJ-L0425- 6	4	1/8	20	18	9	6	1.9	12	10	24
ZJ-L0425- 8		1/4	21	21	11	6	1.9	14	10	37
ZJ-L0604- 6	6	1/8	21.5	18	9	7	3.4	12	12	27
ZJ-L0604- 8		1/4	22.5	21	11	7	3.4	14	12	40
ZJ-L0604-10		3/8	23.5	23	12	7	3.4	17	12	60
ZJ-L0805- 6	8	1/8	24	19	9	7.5	4.4	14	14	40
ZJ-L0806- 6		1/8	24	19	9	7.5	5.4	14	14	38
ZJ-L0805- 8		1/4	24	21	11	7.5	4.4	14	14	42
ZJ-L0806- 8		1/4	24	21	11	7.5	5.4	14	14	42
ZJ-L0805-10		3/8	25	23	12	7.5	4.4	17	14	63
ZJ-L0806-10		3/8	25	23	12	7.5	5.4	17	14	62
ZJ-L1065- 8	10	1/4	26.5	22	11	8	5.9	17	17	62
ZJ-L1075- 8		1/4	26.5	22	11	8	6.9	17	17	63
ZJ-L1008- 8		1/4	26.5	22	11	8	7.4	17	17	61
ZJ-L1065-10		3/8	26.5	23	12	8	5.9	17	17	70
ZJ-L1075-10		3/8	26.5	23	12	8	6.9	17	17	68
ZJ-L1008-10		3/8	26.5	23	12	8	7.4	17	17	68
ZJ-L1065-15		1/2	28.5	29	15	8	5.9	22	17	122
ZJ-L1075-15		1/2	28.5	29	15	8	6.9	22	17	121
ZJ-L1008-15		1/2	28.5	29	15	8	7.4	22	17	120
ZJ-L1208- 8	12	1/4	27.5	23	11	9.5	7.2	17	19	68
ZJ-L1209- 8		1/4	27.5	23	11	9.5	7.9	17	19	66
ZJ-S1210- 8		1/4	27.5	23	11	9.5	7.9	17	19	64
ZJ-L1208-10		3/8	30	27	12	9.5	7.2	22	19	117
ZJ-L1209-10		3/8	30	27	12	9.5	8.2	22	19	115
ZJ-L1210-10		3/8	30	27	12	9.5	9.2	22	19	113
ZJ-L1208-15		1/2	30	30	15	9.5	7.2	22	19	130
ZJ-L1209-15		1/2	30	30	15	9.5	8.2	22	19	129
ZJ-L1210-15		1/2	30	30	15	9.5	9.2	22	19	125

Dimensions

Double tee
● ZJ-T□□-□

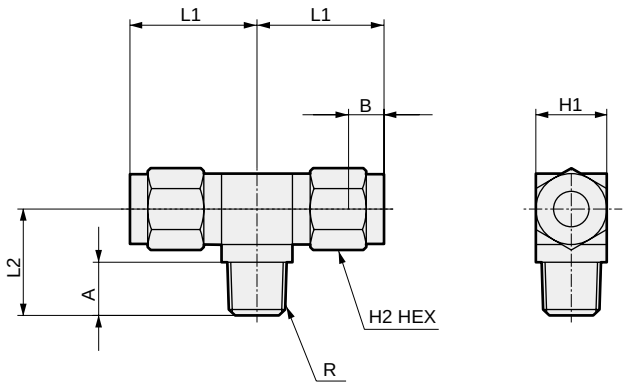

D tee
● ZJ-T□□-□-D

[Sales unit is 1 pc./bag]

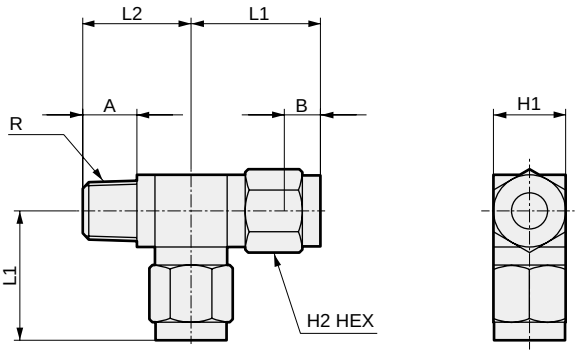

Model No.	Tube O.D. ø	R	L1	L2	A	B	Min. bore size	H1	H2	Wt. g
ZJ-T0425- 6	4	1/8	20	18	9	6	1.9	12	10	33
ZJ-T0425- 8		1/4	21	21	11	6	1.9	14	10	46
ZJ-T0604- 6	6	1/8	21.5	18	9	7	3.4	12	12	38
ZJ-T0604- 8		1/4	22.5	21	11	7	3.4	14	12	51
ZJ-T0604-10		3/8	23.5	23	12	7	3.4	17	12	73
ZJ-T0805- 6	8	1/8	23.5	19	9	7.5	4.4	14	14	54
ZJ-T0806- 6		1/8	23.5	19	9	7.5	5.4	14	14	52
ZJ-T0805- 8		1/4	23.5	21	11	7.5	4.4	14	14	58
ZJ-T0806- 8		1/4	23.5	21	11	7.5	5.4	14	14	56
ZJ-T0805-10		3/8	25	23	12	7.5	4.4	17	14	82
ZJ-T0806-10		3/8	25	23	12	7.5	5.4	17	14	80
ZJ-T1065- 8	10	1/4	28.5	25	11	8	5.9	22	17	134
ZJ-T1075- 8		1/4	28.5	25	11	8	6.9	22	17	132
ZJ-T1008- 8		1/4	28.5	25	11	8	7.4	22	17	131
ZJ-T1065-10		3/8	28.5	26	12	8	5.9	22	17	142
ZJ-T1075-10		3/8	28.5	26	12	8	6.9	22	17	139
ZJ-T1008-10		3/8	28.5	26	12	8	7.4	22	17	137
ZJ-T1065-15		1/2	28.5	29	15	8	5.9	22	17	151
ZJ-T1075-15		1/2	28.5	29	15	8	6.9	22	17	147
ZJ-T1008-15		1/2	28.5	29	15	8	7.4	22	17	146
ZJ-T1208- 8	12	1/4	30	26	11	9.5	7.2	22	19	146
ZJ-T1209- 8		1/4	30	26	11	9.5	7.9	22	19	141
ZJ-T1210- 8		1/4	30	26	11	9.5	7.9	22	19	138
ZJ-T1208-10		3/8	30	27	12	9.5	7.2	22	19	149
ZJ-T1209-10		3/8	30	27	12	9.5	8.2	22	19	146
ZJ-T1210-10		3/8	30	27	12	9.5	9.2	22	19	141
ZJ-T1208-15		1/2	30	30	15	9.5	7.2	22	19	162
ZJ-T1209-15		1/2	30	30	15	9.5	8.2	22	19	158
ZJ-T1210-15		1/2	30	30	15	9.5	9.2	22	19	154

Model No.	Tube O.D. ø	R	L1	L2	A	B	Min. bore size	H1	H2	Wt. g
ZJ-T0425- 6-D	4	1/8	20	18	9	6	1.9	12	10	35
ZJ-T0425- 8-D		1/4	21	21	11	6	1.9	14	10	49
ZJ-T0604- 6-D	6	1/8	21.5	18	9	7	3.4	12	12	39
ZJ-T0604- 8-D		1/4	22.5	21	11	7	3.4	14	12	54
ZJ-T0604-10-D		3/8	23.5	23	12	7	3.4	17	12	78
ZJ-T0805- 6-D	8	1/8	23.5	19	9	7.5	4.4	14	14	55
ZJ-T0806- 6-D		1/8	23.5	19	9	7.5	5.4	14	14	53
ZJ-T0805- 8-D		1/4	23.5	21	11	7.5	4.4	14	14	59
ZJ-T0806- 8-D		1/4	23.5	21	11	7.5	5.4	14	14	57
ZJ-T0805-10-D		3/8	25	23	12	7.5	4.4	17	14	85
ZJ-T0806-10-D		3/8	25	23	12	7.5	5.4	17	14	81
ZJ-T1065- 8-D	10	1/4	28.5	25	11	8	5.9	22	17	135
ZJ-T1075- 8-D		1/4	28.5	25	11	8	6.9	22	17	129
ZJ-T1008- 8-D		1/4	28.5	25	11	8	7.4	22	17	127
ZJ-T1065-10-D		3/8	28.5	26	12	8	5.9	22	17	142
ZJ-T1075-10-D		3/8	28.5	26	12	8	6.9	22	17	136
ZJ-T1008-10-D		3/8	28.5	26	12	8	7.4	22	17	135
ZJ-T1065-15-D		1/2	28.5	29	15	8	5.9	22	17	157
ZJ-T1075-15-D		1/2	28.5	29	15	8	6.9	22	17	152
ZJ-T1008-15-D		1/2	28.5	29	15	8	7.4	22	17	151
ZJ-T1208- 8-D	12	1/4	30	26	11	9.5	7.2	22	19	146
ZJ-T1209- 8-D		1/4	30	26	11	9.5	7.9	22	19	144
ZJ-T1210- 8-D		1/4	30	26	11	9.5	7.9	22	19	145
ZJ-T1208-10-D		3/8	30	27	12	9.5	7.2	22	19	153
ZJ-T1209-10-D		3/8	30	27	12	9.5	8.2	22	19	148
ZJ-T1210-10-D		3/8	30	27	12	9.5	9.2	22	19	141
ZJ-T1208-15-D		1/2	30	30	15	9.5	7.2	22	19	167
ZJ-T1209-15-D		1/2	30	30	15	9.5	8.2	22	19	163
ZJ-T1210-15-D		1/2	30	30	15	9.5	9.2	22	19	155

Dimensions

[Sales unit is 1 pc./bag]

Straight

● ZJ-S□□-0

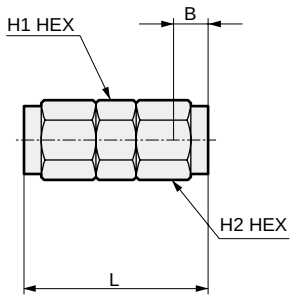

Model No.	Compatible tube O.D. ø	L	B	Min. bore size	H1	H2	Wt. g
ZJ-S0425-0	4	28	6	1.9	10	10	15
ZJ-S0604-0	6	32	7	3.2	12	12	24
ZJ-S0805-0	8	36	7.5	4.2	14	14	36
ZJ-S0806-0		36	7.5	5.2	14	14	35
ZJ-S1065-0	10	40	8	5.9	17	17	57
ZJ-S1075-0		40	8	6.9	17	17	56
ZJ-S1008-0		40	8	7.4	17	17	55
ZJ-S1208-0	12	44	9.5	7.2	17	19	70
ZJ-S1209-0		44	9.5	8.2	17	19	67
ZJ-S1210-0		44	9.5	9.2	17	19	64

Tee

● ZJ-T□□-0

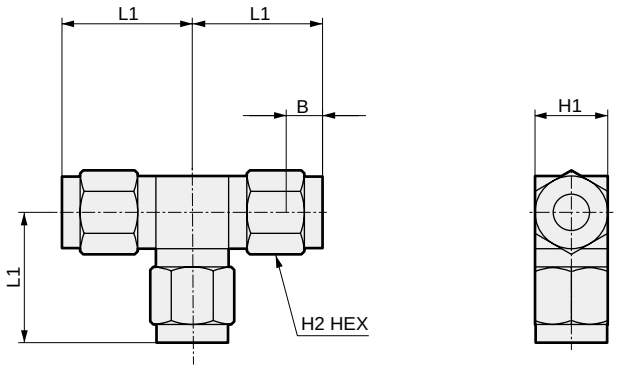

Model No.	Compatible tube O.D. ø	L1	B	Min. bore size	H1	H2	Wt. g
ZJ-T0425-0	4	20	6	1.9	12	10	37
ZJ-T0604-0	6	21.5	7	3.4	12	12	44
ZJ-T0805-0	8	23.5	7.5	4.4	14	14	63
ZJ-T0806-0		28.5	7.5	5.4	14	14	61
ZJ-T1065-0	10	28.5	8	5.9	22	17	147
ZJ-T1075-0		28.5	8	6.9	22	17	144
ZJ-T1008-0		28.5	8	7.4	22	17	142
ZJ-T1208-0	12	30	9.5	7.2	22	19	163
ZJ-T1209-0		30	9.5	8.2	22	19	156
ZJ-T1210-0		30	9.5	9.2	22	19	151

Sleeve integrated nut

● ZJ-N□

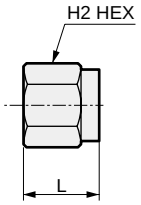

Model No.	Compatible tube O.D. ø	L	H2	Wt. g
ZJ-N04	ø4	11	10	4
ZJ-N06	ø6	12.5	12	6
ZJ-N08	ø8	14	14	8
ZJ-N10	ø10	15.5	17	14
ZJ-N12	ø12	17	19	18

MJ.JL Tightening fitting

Port size 1/8 to 1/2 (Rc or R)

● Stable and secure piping due to double chuck. This is an excellent tightening fitting with high reliability.

Aoi Co., Ltd.

Tightening joint MJ Series

■ Straight

Single straight/ MJS □ - □

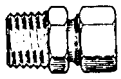

Tube O.D. ø
4
6
8
10
12
15

·Refer to page: 865

Straight/ MJS □ -0



Tube O.D. ø
4
6
8
10
12
15

·Refer to page: 865

Female straight/ MJS □ - □ -M

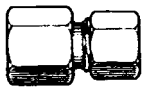

Tube O.D. ø
4
6
8
10
12
15

·Refer to page: 865

Bulkhead/ MJS □ -0-X

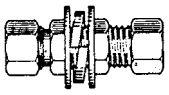

Tube O.D. ø
4
6
8
10
12
15

·Refer to page: 865

Bulkhead female/ MJS □ - □ -E

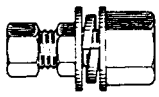

Tube O.D. ø
4
6
8
10

·Refer to page: 866

■ Elbow

Single elbow/ MJL □ - □

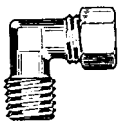

Tube O.D. ø
4
6
8
10
12
15

·Refer to page: 866

Elbow/MJL □ -0

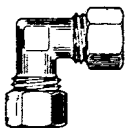

Tube O.D. ø
4
6
8
10
12
15

·Refer to page: 866

Female elbow/ MJL □ - □ -M

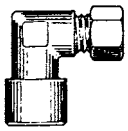

Tube O.D. ø
4
6
8
10
12

·Refer to page: 866

Turn elbow/ MJL □ - □ -T

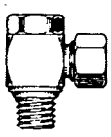

Tube O.D. ø
4
6
8
10
12
15

·Refer to page: 867

■ Tee

Double tee/ MJT □ - □

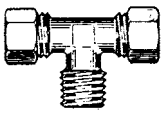

Tube O.D. ø
4
6
8
10
12
15

·Refer to page: 867

D tee/ MJT □ - □ -D

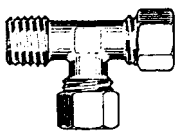

Tube O.D. ø
4
6
8
10
12
15

·Refer to page: 867

Tee/MJT □ -0

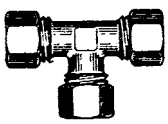

Tube O.D. ø
4
6
8
10
12
15

·Refer to page: 867

Female tee/ MJT □ - □ -M

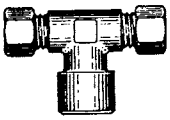

Tube O.D. ø
4
6
8
10
12

·Refer to page: 868

Sleeve/MJN □ -0



Tube O.D. ø
4
6
8
10
12
15

·Refer to page: 868

Insert ring/ MJU □ -0



Tube O.D. ø
4
6
8
10
12

·Refer to page: 868

Fitting

Elbow/JL

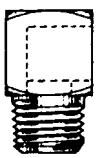

Port size R, Rc
1/8
1/4
3/8
1/2

·Refer to page: 869

● Sales unit is 10 pcs./bag.

Specifications

Item	MJ
Working fluid	Compressed air
Max. working pressure MPa	1.0 (≈150 psi, 10 bar)
Ambient temperature °C	-10 (14°F) to 60 (140°F) (no freezing)
Tube used	Soft nylon tube (F-15 □□), urethane tube (U-95 □□) Note Coiling tube (KX-12 □□)

Note: Refer to page 902 for tube dimensions, ambient temperature and working pressure.

How to order

MJ S 4 - 6 - M

* Refer to the model No. on the dimensions page (pages 865 to 868) for the model No. combination.

Ⓐ Shape

Ⓐ Shape	
S	Straight
L	Elbow
T	Tee
N	Sleeve
U	Insert ring

Ⓑ Compatible tube O.D.

Ⓑ Compatible tube O.D.	
4	ø4
6	ø6
8	ø8
10	ø10
12	ø12
15	ø15

Ⓒ Port size

Ⓒ Port size	
6	R 1/8
8	R 1/4
10	R 3/8
15	R 1/2
0	No thread

Ⓓ Other combinations

Ⓓ Other combinations	
D	D type
E	Bulkhead female
M	Female
T	Turn
X	Bulkhead

Note: Sales unit is 10 pcs./bag.

Internal structure and parts list

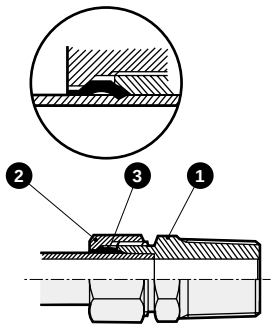

No.	Part name	Material
1	Body	Copper alloy
2	Tightening nut	Copper alloy
3	Sleeve	Copper alloy

⚠ Safety precautions

- If a urethane or soft nylon tube is used in high working temperatures, use insert ring. (Refer to page 868). If an insert ring is not used, the tube may detach from the fitting.
- Use copper tubes of class 1/2H (heat treatment) or less and with a tube wall thickness 1 mm or less.
- If used at frequently moving tube sections, trouble may occur. Avoid this kind of usage.

Mounting and removal

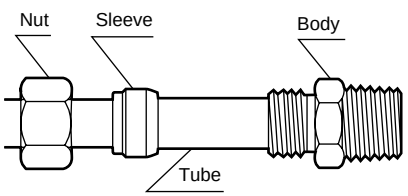

(1) Couple the nut and sleeve plastic tube or copper tube as shown in the figure, insert the tube until hitting the fitting (tube end), then tighten the nut by hand.
(2) Then tighten with a wrench, etc. The appropriate number of turns to tighten is 1 3/4 for plastic tubes and 1 1/4 to 1 1/2 for copper tubes (1/2H, 1 mm thickness).
(3) Cut the tube at a right angle so that there are no burrs or particles on the cut surface.
(4) Tighten temporarily at 1/4 turn less than the appropriate number of turns and tighten up the 1/4 turn in the final tightening. For re-tightening, also turn 1/4 or more.

Dimensions: Single straight/straight/female straight/bulkhead

[Sales unit is 10 pcs./bag]

● Single straight/MJS□-□

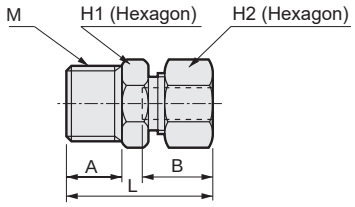

* L and B dimensions show rough dimensions before fixing nut.

Model No.	Tube O.D. ø	M	H_1	H_2	L	A	B	Min. bore	Eff. X-sectional area (mm²)	Wt. g
MJS4-6	4	R 1/8	10	10	22.5	8	11	3	4.1	10
MJS4-8	4	R 1/4	14	10	26	11	11	3	3.9	14
MJS6-6	6	R 1/8	10	12	23.5	8	11.5	4.5	7.9	12
MJS6-8	6	R 1/4	14	12	27	11	11.5	4.5	7.8	19
MJS6-10	6	R 3/8	17	12	28.5	12	11.5	4.5	7.9	29
MJS8-6	8	R 1/8	12	14	25.5	8	13	6	19.5	16
MJS8-8	8	R 1/4	14	14	28.5	11	13	6	20.1	21
MJS8-10	8	R 3/8	17	14	30	12	13	6	19.5	31
MJS10-8	10	R 1/4	14	17	30.5	11	14.5	8	36.1	26
MJS10-10	10	R 3/8	17	17	31.5	12	14.5	8	36.1	35
MJS10-15	10	R 1/2	22	17	34.5	15	14.5	8	36.1	53
MJS12-8	12	R 1/4	16	19	32	11	16	9	57.8	32
MJS12-10	12	R 3/8	17	19	33	12	16	10	55.5	38
MJS12-15	12	R 1/2	22	19	36	15	16	10	57.8	56
MJS15-10	15	R 3/8	20	23	37	12	19	12	113.3	52
MJS15-15	15	R 1/2	23	23	40	15	19	12	115.2	72

● Straight/MJS□-0

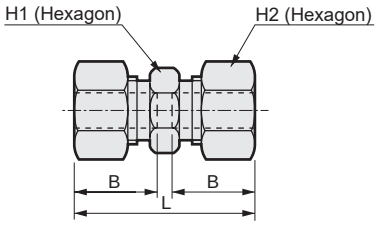

* L and B dimensions show rough dimensions before fixing nut.

Model No.	Compatible tube O.D. ø	H_1	H_2	L	B	Min Hole ø	Eff. X-sectional area (mm²)	Wt. g
MJS4-0	4	8	10	25.5	11	3	4.3	12
MJS6-0	6	10	12	27.5	11.5	4.5	8.1	17
MJS8-0	8	12	14	31	13	6	25.2	23
MJS10-0	10	14	17	34	14.5	8	43.2	35
MJS12-0	12	16	19	37	16	10	68.6	44
MJS15-0	15	20	23	44	19	12	106.0	76

● Female straight/MJS□-□-M

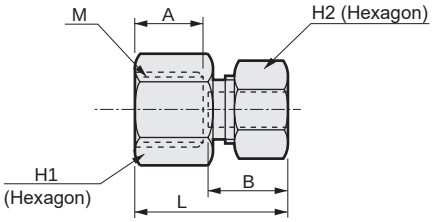

* L and B dimensions show rough dimensions before fixing nut.

Model No.	Tube O.D. ø	M	H_1	H_2	L	A	B	Min. bore	Eff. X-sectional area (mm²)	Wt. g
MJS4-6-M	4	Rc 1/8	13	10	20	8	11	3	4.0	12
MJS4-8-M	4	Rc 1/4	17	10	23	11	11	3	4.8	21
MJS6-6-M	6	Rc 1/8	13	12	21	8	11.5	4.5	8.1	14
MJS6-8-M	6	Rc 1/4	17	12	24	11	11.5	4.5	8.6	22
MJS6-10-M	6	Rc 3/8	20	12	25	12	11.5	4.5	14.4	27
MJS8-6-M	8	Rc 1/8	13	14	22.5	8	13	6	15.1	17
MJS8-8-M	8	Rc 1/4	17	14	25.5	11	13	6	20.1	25
MJS8-10-M	8	Rc 3/8	20	14	26.5	12	13	6	25.1	29
MJS10-8-M	10	Rc 1/4	17	17	27	11	14.5	8	36.1	30
MJS10-10-M	10	Rc 3/8	20	17	28	12	14.5	8	34.4	34
MJS10-15-M	10	Rc 1/2	26	17	31.5	15	14.5	8	34.4	60
MJS12-8-M	12	Rc 1/4	17	19	28.5	11	16	10	55.2	34
MJS12-10-M	12	Rc 3/8	20	19	30	12	16	10	55.5	39
MJS12-15-M	12	Rc 1/2	26	19	33	15	16	10	55.5	63
MJS15-10-M	15	Rc 3/8	20	23	33	12	19	12	73.7	52
MJS15-15-M	15	Rc 1/2	26	23	36	15	19	12	103.3	76

● Bulkhead/MJS□-0-X

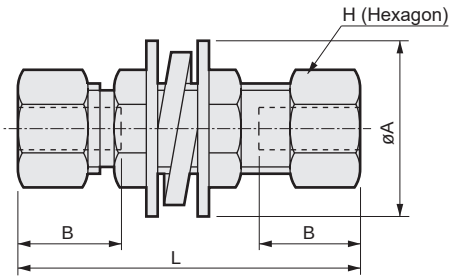

* L and B dimensions show rough dimensions before fixing nut.
Mounting plate thickness 4 mm or less

Model No.	Compatible tube O.D. ø	H	L	B	Mounting holeø	Min. bore	Eff. X-sectional area (mm²)	A	Wt. g
MJS4-0-X	4	10	39	11	9	3	3.9	18	25
MJS6-0-X	6	12	43	11.5	11	4.5	7.7	22	26
MJS8-0-X	8	14	47	13	13	6	25.9	22	49
MJS10-0-X	10	17	51	14.5	15	8	41.1	26	59
MJS12-0-X	12	19	54	16	17	10	67.6	32	100
MJS15-0-X	15	23	63	19	21	12	97.0	40	176

Dimensions: Bulkhead female/single elbow/female elbow/elbow

[Sales unit is 10 pcs./bag]

● Bulkhead female/MJS□-□-E

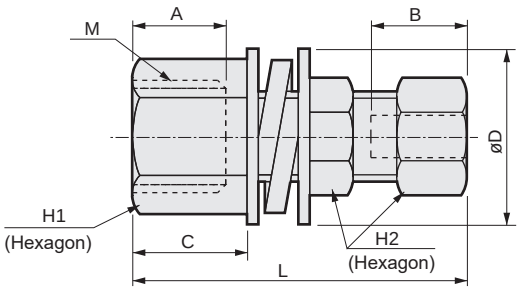

* L and B dimensions show rough dimensions before fixing nut.
Mounting plate thickness 4 mm or less

	Model No.	Tube O.D. ø	M	H_1	H_2	L	A	B	C	Mounting holeø	Min. bore	Eff. X-sectional area (mm²)	D	Wt. g
★	MJS4-6-E	4	Rc 1/8	12	10	34	8	11	9.5	9	3	5.2	18	23
	MJS6-8-E	6	Rc 1/4	17	12	40	11	11.5	13	11	4.5	13.2	22	42
	MJS8-8-E	8	Rc 1/4	17	14	42.5	11	13	13	13	6	25.6	22	51
★	MJS10-10-E	10	Rc 3/8	20	17	45.5	12	14.5	14	15	8	40.1	26	70

Model No. with ★ are available as made-to-order products. Contact CKD.

● Single elbow/MJL □-□

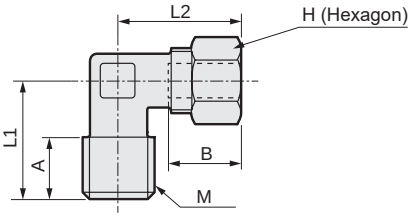

* L2 and B dimensions show rough dimensions before fixing nut.

Model No.	Tube O.D. ø	M	H	L_1	L_2	A	B	Min. bore	Eff. X-sectional area (mm²)	Wt. g
MJL4-6	4	R 1/8	10	17	20	8	11	3	3.7	19
MJL4-8	4	R 1/4	10	20	20	11	11	3	4.0	23
MJL6-6	6	R 1/8	12	17	20.5	8	11.5	4.5	7.8	21
MJL6-8	6	R 1/4	12	20	20.5	11	11.5	4.5	7.8	25
MJL6-10	6	R 3/8	12	24	23.5	12	11.5	4.5	8.1	39
MJL8-6	8	R 1/8	14	18	23	8	13	6	18.1	25
MJL8-8	8	R 1/4	14	21	23	11	13	6	16.8	31
MJL8-10	8	R 3/8	14	24	25	12	13	6	18.5	40
MJL10-8	10	R 1/4	17	23	26.5	11	14.5	8	31.4	36
MJL10-10	10	R 3/8	17	24	26.5	12	14.5	8	31.4	44
MJL10-15	10	R 1/2	17	28	28.5	15	14.5	8	32.8	66
MJL12-8	12	R 1/4	19	24	29	11	16	9	46.6	46
MJL12-10	12	R 3/8	19	25	29	12	16	10	48.1	51
MJL12-15	12	R 1/2	19	28	29	15	16	10	49.8	67
MJL15-10	15	R 3/8	23	26	34	12	19	12	88.3	72
MJL15-15	15	R 1/2	23	29	34	15	19	12	92.2	90

● Female elbow/MJL □-□-M

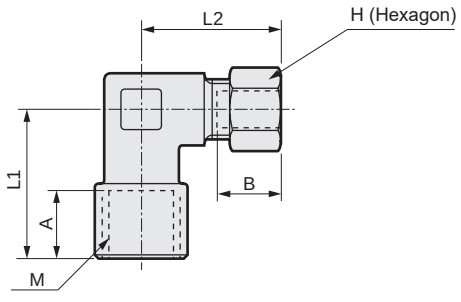

* L2 and B dimensions show rough dimensions before fixing nut.

	Model No.	Tube O.D. ø	M	H	L_1	L_2	A	B	Min. bore	Eff. X-sectional area (mm²)	Wt. g
★	MJL4-6-M	4	Rc 1/8	10	18.5	20	8	11	3	4.1	21
★	MJL4-8-M	4	Rc 1/4	10	24	22.5	11	11	3	4.7	33
	MJL6-6-M	6	Rc 1/8	12	18.5	20.5	8	11.5	4.5	9.4	22
	MJL6-8-M	6	Rc 1/4	12	24	23.5	11	11.5	4.5	12.8	34
★	MJL6-10-M	6	Rc 3/8	12	27	25.5	12	11.5	4.5	13.6	52
★	MJL8-6-M	8	Rc 1/8	14	19.5	23	8	13	6	13.6	29
	MJL8-8-M	8	Rc 1/4	14	24	25	11	13	6	21.0	36
★	MJL8-10-M	8	Rc 3/8	14	27	27	12	13	6	22.8	52
★	MJL10-8-M	10	Rc 1/4	17	24	26.5	11	14.5	8	29.3	40
★	MJL10-10-M	10	Rc 3/8	17	27	28.5	12	14.5	8	35.7	55
★	MJL12-8-M	12	Rc 1/4	19	25	29	11	16	10	29.3	49
★	MJL12-10-M	12	Rc 3/8	19	27	29	12	16	10	51.4	56

Model No. with ★ are available as made-to-order products. Consult with CKD.

● Elbow/MJL □-0

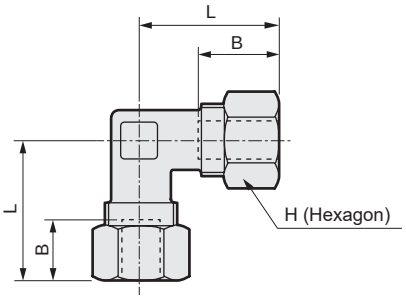

* L and B dimensions show rough dimensions before fixing nut.

Model No.	Compatible tube O.D. ø	H	L	B	Min Hole ø	Eff. X-sectional area (mm²)	Wt. g
MJL4-0	4	10	20	11	3	3.6	21
MJL6-0	6	12	20.5	11.5	4.5	9.4	24
MJL8-0	8	14	23	13	6	20.7	32
MJL10-0	10	17	26.5	14.5	8	33.1	44
MJL12-0	12	19	29	16	10	49.5	57
MJL15-0	15	23	34	19	12	85.4	99

Dimensions: Turn elbow/double tee/D tee/tee

CAD

[Sales unit is 10 pcs./bag]

● Turn elbow/MJL□-□-T

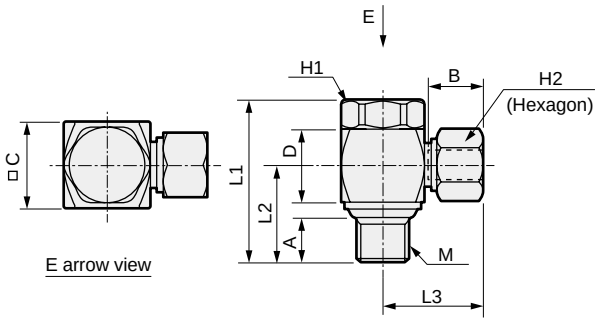

* L3 and B dimensions show rough dimensions before fixing nut.

Model No.	Tube O.D. ø	M	H_1	H_2	L_1	L_2	L_3	A	B	C	D	Eff. X-sectional area (mm²)	Wt. g
MJL4-6-T	4	R 1/8	14	10	29.5	17.6	18	8	11	15	13.5	3.9	37
MJL6-6-T	6	R 1/8	14	12	29.5	17.6	19	8	11.5	15	13.5	8.3	37
MJL6-8-T	6	R 1/4	19	12	36.5	22.1	21.5	11	11.5	20	16.5	9.7	70
MJL8-6-T	8	R 1/8	14	14	29.5	17.6	20.5	8	13	15	13.5	13.7	68
MJL8-8-T	8	R 1/4	19	14	36.5	22.1	23	11	13	20	16.5	18.0	72
MJL10-8-T	10	R 1/4	19	17	36.5	22.1	24.5	11	14.5	20	16.5	27.4	78
MJL10-10-T	10	R 3/8	22	17	42	25	26.5	12	14.5	24	20	33.9	127
MJL12-10-T	12	R 3/8	22	19	42	25	28	12	16	24	20	42.4	128
MJL12-15-T	12	R 1/2	24	19	52.5	32	29.5	15	16	27	27	45.5	198
MJL15-15-T	15	R 1/2	24	23	52.5	32	32.5	15	19	27	27	64.5	212

● Double tee/MJT□-□

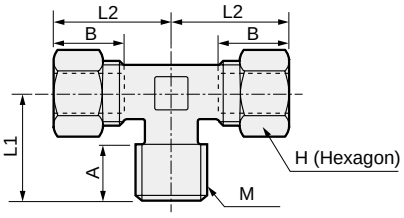

* L2 and B dimensions show rough dimensions before fixing nut.

Model No.	Tube O.D. ø	M	H	L_1	L_2	A	B	Min. bore	Eff. X-sectional area (mm²)	Wt. g
MJT4-6	4	R 1/8	10	17	20	8	11	3	6.7	24
MJT4-8	4	R 1/4	10	20	20	11	11	3	6.6	31
MJT6-6	6	R 1/8	12	17	20.5	8	11.5	4.5	12.4	28
MJT6-8	6	R 1/4	12	20	20.5	11	11.5	4.5	14.4	34
MJT6-10	6	R 3/8	12	24	23.5	12	11.5	4.5	15.0	50
MJT8-6	8	R 1/8	14	18	23	8	13	6	27.8	37
MJT8-8	8	R 1/4	14	21	23	11	13	6	28.9	43
MJT8-10	8	R 3/8	14	24	25	12	13	6	32.8	54
MJT10-8	10	R 1/4	17	23	26.5	11	14.5	8	46.6	54
MJT10-10	10	R 3/8	17	24	26.5	12	14.5	8	46.6	62
MJT10-15	10	R 1/2	17	28	28.5	15	14.5	8	66.2	87
MJT12-8	12	R 1/4	19	24	29	11	16	10	61.1	66
MJT12-10	12	R 3/8	19	25	29	12	16	10	80.5	74
MJT12-15	12	R 1/2	19	28	29	15	16	10	76.0	90
MJT15-10	15	R 3/8	23	26	34	12	19	12	105.4	110
MJT15-15	15	R 1/2	23	29	34	15	19	12	105.4	119

● D tee/MJT□-□-D

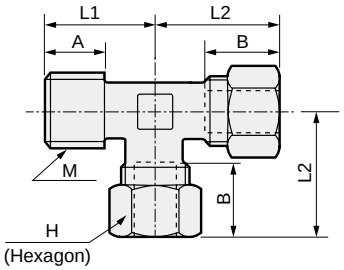

* L2 and B dimensions show rough dimensions before fixing nut.

Model No.	Tube O.D. ø	M	H	L_1	L_2	A	B	Min. bore	Eff. X-sectional area (mm²)	Wt. g
MJT4-6-D	4	R 1/8	10	17	20	8	11	3	7.6	25
MJT4-8-D	4	R 1/4	10	20	20	11	11	3	7.8	30
MJT6-6-D	6	R 1/8	12	17	20.5	8	11.5	4.5	13.1	27
MJT6-8-D	6	R 1/4	12	20	20.5	11	11.5	4.5	15.7	34
MJT6-10-D	6	R 3/8	12	24	23.5	12	11.5	4.5	14.4	51
MJT8-6-D	8	R 1/8	14	18	23	8	13	6	27.3	38
MJT8-8-D	8	R 1/4	14	21	23	11	13	6	28.9	43
MJT8-10-D	8	R 3/8	14	24	25	12	13	6	36.1	54
MJT10-8-D	10	R 1/4	17	23	26.5	11	14.5	8	48.1	88
MJT10-10-D	10	R 3/8	17	24	26.5	12	14.5	8	49.8	62
MJT10-15-D	10	R 1/2	17	28	28.5	15	14.5	8	68.1	87
MJT12-8-D	12	R 1/4	19	24	29	11	16	10	65.6	68
MJT12-10-D	12	R 3/8	19	25	29	12	16	10	76.0	68
MJT12-15-D	12	R 1/2	19	28	29	15	16	10	80.3	90
MJT15-10-D	15	R 3/8	23	26	34	12	19	12	110.4	110
MJT15-15-D	15	R 1/2	23	29	34	15	19	12	110.4	128

● Tee/MJT□-0

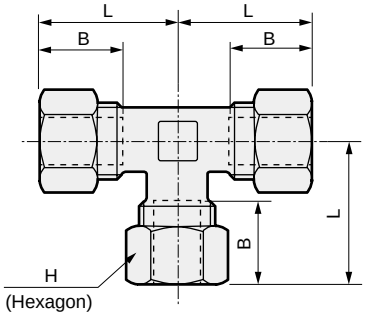

* L and B dimensions show rough dimensions before fixing nut.

Model No.	Compatible tube O.D. ø	H	L	B	Min. bore size	Eff. X-sectional area (mm²)	Wt. g
MJT4-0	4	10	20	11	3	4.4	27
MJT6-0	6	12	20.5	11.5	4.5	7.2	31
MJT8-0	8	14	23	13	6	19.0	44
MJT10-0	10	17	26.5	14.5	8	36.1	62
MJT12-0	12	19	29	16	10	52.6	80
MJT15-0	15	23	34	19	12	100.8	137

Dimensions: Female tee/sleeve/insert ring

[Sales unit is 10 pcs./bag]

● Female tee/MJT□-□-M

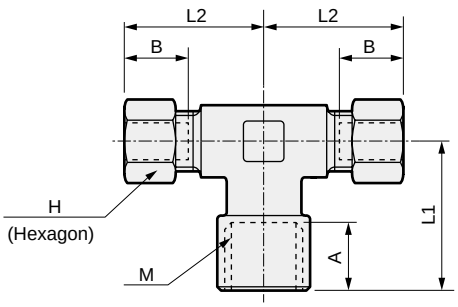

* L2 and B dimensions show rough dimensions before fixing nut.

	Model No.	Tube O.D. ø	M	H	L1	L2	A	B	Min. bore	Eff. X-sectional area (mm²)	Wt. g
★	MJT4-6-M	4	Rc 1/8	10	18.5	20	8	11	3	7.6	29
★	MJT4-8-M	4	Rc 1/4	10	24	22.5	11	11	3	8.6	43
	MJT6-6-M	6	Rc 1/8	12	18.5	20.5	8	11.5	4.5	13.9	32
	MJT6-8-M	6	Rc 1/4	12	24	23.5	11	11.5	4.5	22.9	46
★	MJT6-10-M	6	Rc 3/8	12	27	25.5	12	11.5	4.5	24.3	65
★	MJT8-6-M	8	Rc 1/8	14	19.5	23	8	13	6	14.3	41
	MJT8-8-M	8	Rc 1/4	14	24	25	11	13	6	29.2	50
★	MJT8-10-M	8	Rc 3/8	14	27	27	12	13	6	40.0	70
★	MJT10-8-M	10	Rc 1/4	17	24	26.5	11	14.5	8	29.2	58
★	MJT10-10-M	10	Rc 3/8	17	27	28.5	12	14.5	8	53.7	78
★	MJT12-8-M	12	Rc 1/4	19	26	29	11	16	10	29.5	72
★	MJT12-10-M	12	Rc 3/8	19	27	29	12	16	10	63.8	120

Model No. with ★ are available as made-to-order products. Contact CKD.

● Sleeve/MJN□-0
Material C3604BD

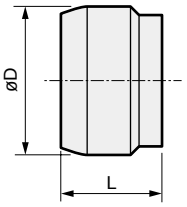

Model No.	Compatible tube O.D. ø	øD	L	Wt. g
MJN4-0	4	6	6	0.5
MJN6-0	6	8	6	0.7
MJN8-0	8	10	7	1.1
MJN10-0	10	12	8	1.6
MJN12-0	12	14	8.5	2
MJN15-0	15	18	10.5	3.9

● Insert ring/MJ□□-0
Material C3604BD

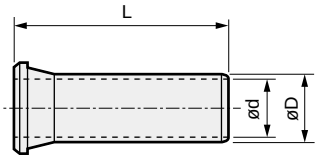

Mounting procedure
Put the cap nut and then the sleeve on the tube, and push the insert ring into the tube to the end. Insert the tube into the fitting body up to the end and fasten the cap nut and fitting.

Model No.	L	øD	ød (I.D.)	Compatible tube	Wt. g
MJU4-0	12	1.8	1.1	U-9504	0.4
MJU6-0	15	3.6	2.8	U-9506	0.7
MJU8-0	16	4.8	4	U-9508	1.1
MJU10-0	17	6.3	5.5	U-9510	1.7
MJU12-0	18	7.8	7	U-9512	2.2
MJF4-0	12	2.3	1.5	F-1504	0.4
MJF6-0	15	3.8	3	F-1506	0.5
MJF8-0	16	5.6	4.5	F-1508	1.3
MJF10-0	17	7.1	6.2	F-1510	1.8
MJF12-0	18	8.8	8	F-1512	2.3
MJF15-0	20	11.3	10.3	F-1515	4.3

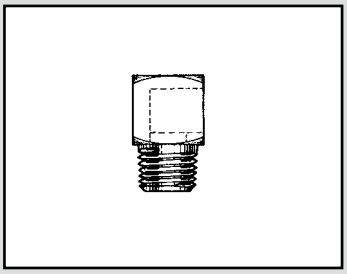

Fitting

JL Series

● Port size: 1/8 to 1/2

CAD

Aoi Co., Ltd.

How to order

JL - 8 - 6

Elbow fitting

Ⓐ Male port size

Ⓐ Male port size	
6	R 1/8
8	R 1/4
10	R 3/8
15	R 1/2

Ⓑ Female port size

Ⓑ Female port size	
6	Rc 1/8

Blank with the male/female port sizes

Note: Sales unit is 10 pcs./bag.

Dimensions CAD

● Elbow fitting/JL

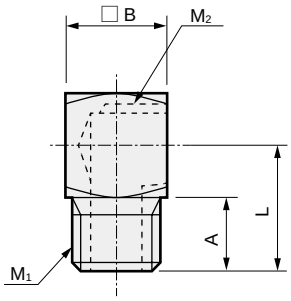

Material C3604BD

* For the lead time of the models marked with *, contact CKD.

Model No.	M1	M2	L	A	B	Min. bore size	Weight g
JL-6	R 1/8	Rc 1/8	15	8	14	6	19
JL-8-6	R 1/4	Rc 1/8	18	11	14	8	22
JL-8	R 1/4	Rc 1/4	19	11	16	8	28
JL-10	R 3/8	Rc 3/8	22	12	20	10	53
JL-15 *	R 1/2	Rc 1/2	27.5	15	25	13	100



Rotary fitting

RJF Series

● Port size: M5, Rc1/8

RoHS CAD

Features

● Built-in bearing for high rigidity/low sliding resistance
● Ample lineup includes 4/6/8/12/16 circuits.
● Space saving type is available for 12/16 circuits.
● M5 and Rc 1/8 port sizes are available.
(Number of circuits: 4/6/8)

Applications

This fitting supplies compressed air to the air cylinder for rotary shaft parts such as indexing table, rotary table or rotary drum, and for air blowing or changeover valves.

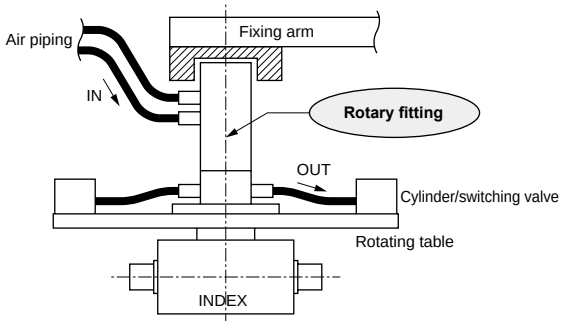

Specifications

Item	RJF-M5-04	RJF-6A-04	RJF-M5-06	RJF-6A-06	RJF-M5-08	RJF-6A-08	RJF-M5-12	RJF-M5-16	RJF-M5-12-S	RJF-M5-16-S
Working fluid	Compressed air									
Working pressure	-100 kPa (≈-15 psi, -1 bar) (*1) to 0.7 MPa (≈100 psi, 7 bar)									
Ambient temperature °C	5 (41°F) to 60 (140°F)									
Number of circuits	4		6		8		12	16	12	16
Port size	M5	Rc1/8	M5	Rc1/8	M5	Rc1/8	M5	M5	M5	M5
Tolerable rotation rate (*2) min^{-1}	350	240	240	170	200	140	175	155	100	90
Rotation resistance N·m	0.05	0.07	0.12	0.17	0.2	0.4	0.85	1.5	0.85	1.3
Min. air port sectional area mm^2	4.9	12.5	4.9	12.5	4.9	12.5	4.9	4.9	4.9	4.9
Weight Kg	0.11	0.28	0.16	0.50	0.38	0.90	0.70	1.30	0.93	1.23

*1: Vacuum cannot be retained.
*2: Number of rotations per minute.

How to order

RJF - M5 - 04 - ( )

Model No.
Ⓐ Port size
Ⓑ Number of circuits
Ⓒ Shape

Code	Description
Ⓐ Port size	
M5	M5
6A *1	Rc1/8
Ⓑ Number of circuits	
04	4 pcs.
06	6 pcs.
08	8 pcs.
12	12 pcs.
16	16 pcs.
Ⓒ Shape	
Blank	Basic
S *2	Space saving structure

*1: Only for 04/06/08 number of circuits.
*2: Only for 12/16 number of circuits.

Internal structure and parts list

● RJF-M5-04
06
08
6A-04
06
08

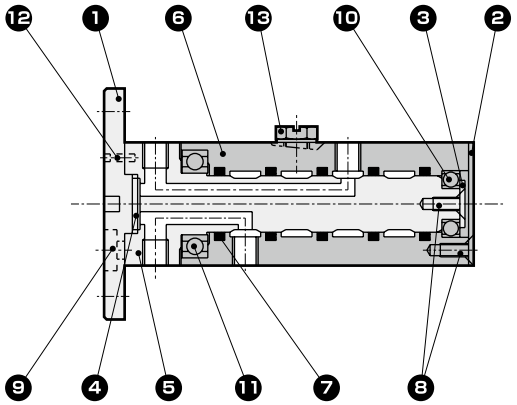

● RJF-M5-12
16

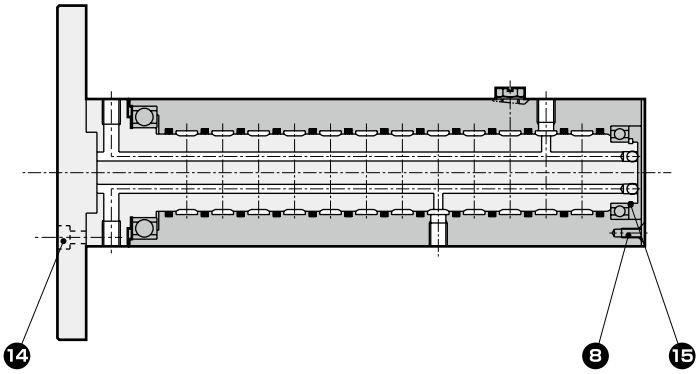

● RJF-M5-12-S
16-S

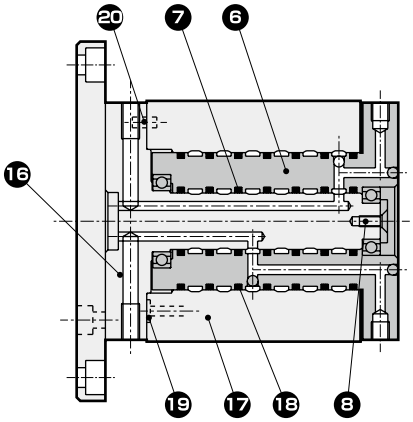

Parts list

No.	Part name	Material	No.	Part name	Material
1	Mounting flange	Aluminum alloy	11	Single row deep groove ball bearing	Steel bearing
2	Fixed side body lid	Stainless steel	12	Parallel pin	Steel bearing
3	Bearing holder	Stainless steel	13	Plug	Copper alloy, stainless steel
4	Gasket	Nitrile rubber	14	Hexagon socket head cap screw	Stainless steel
5	Rotating side body	Aluminum alloy	15	C type snap ring	Stainless steel
6	Fixed side body	Aluminum alloy	16	Rotating side body 1	Aluminum alloy
7	Packing	Nitrile rubber	17	Rotating side body 2	Aluminum alloy
8	Cross-recessed flat head machine screw	Stainless steel	18	Packing	Nitrile rubber
9	Truss machine screw	Stainless steel	19	Gasket	Nitrile rubber
10	Single row deep groove ball bearing	Steel bearing	20	Parallel pin	Steel bearing

Dimensions (basic)

● RJF-M5-04

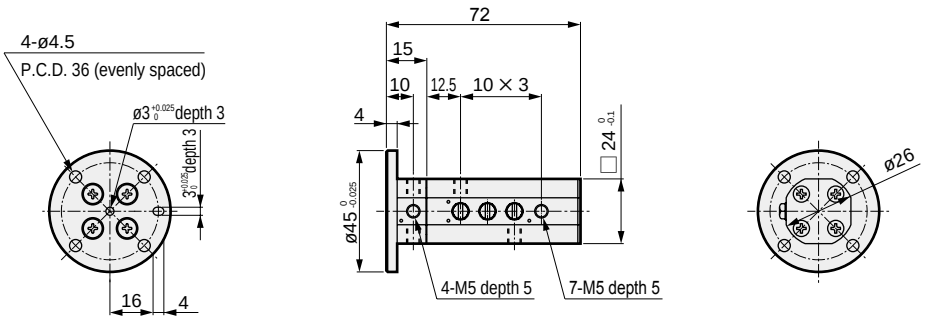

● RJF-6A-04

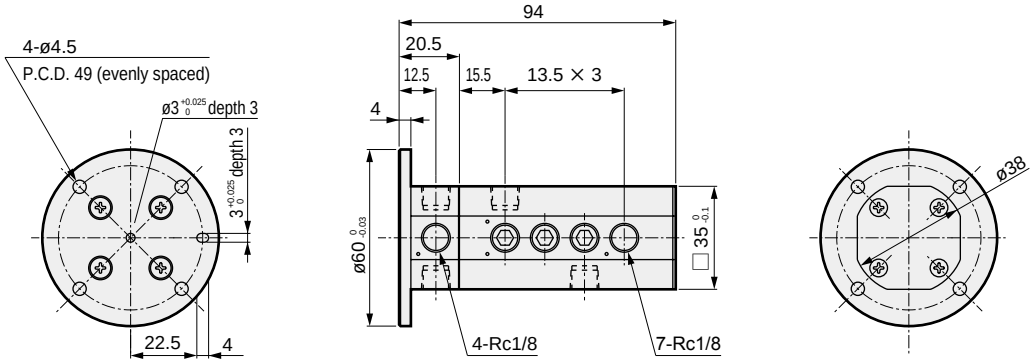

● RJF-M5-06

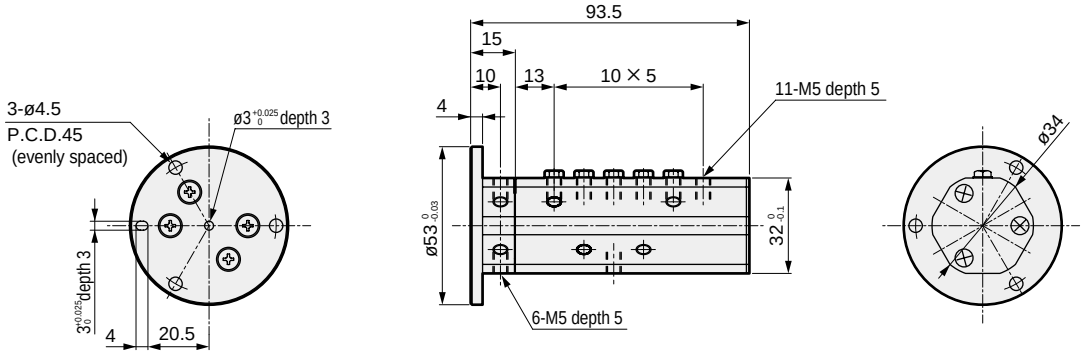

● RJF-6A-06

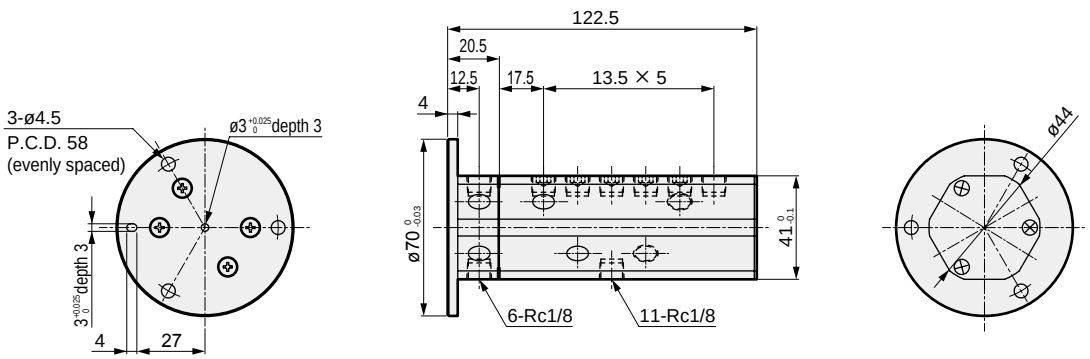

Dimensions (basic)

● RJF-M5-08

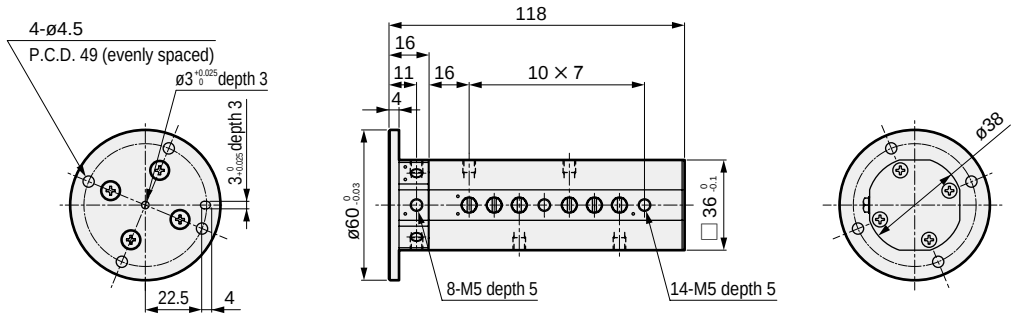

● RJF-6A-08

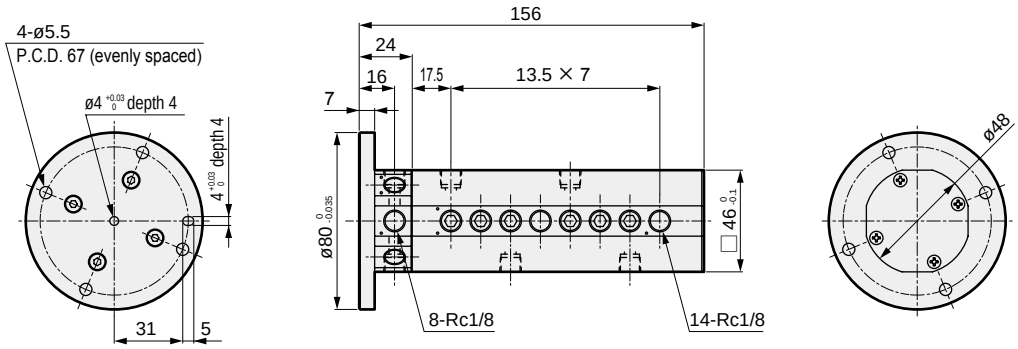

● RJF-M5-12

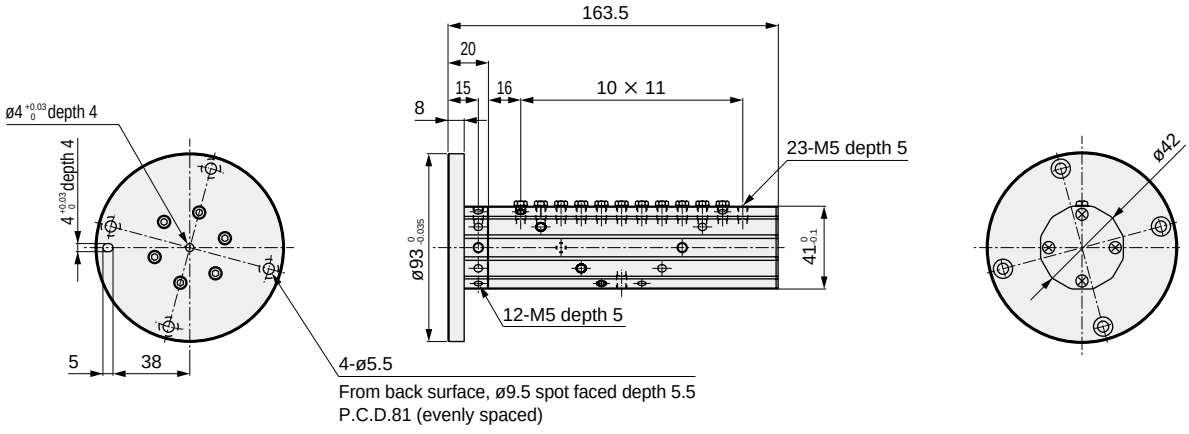

● RJF-M5-16

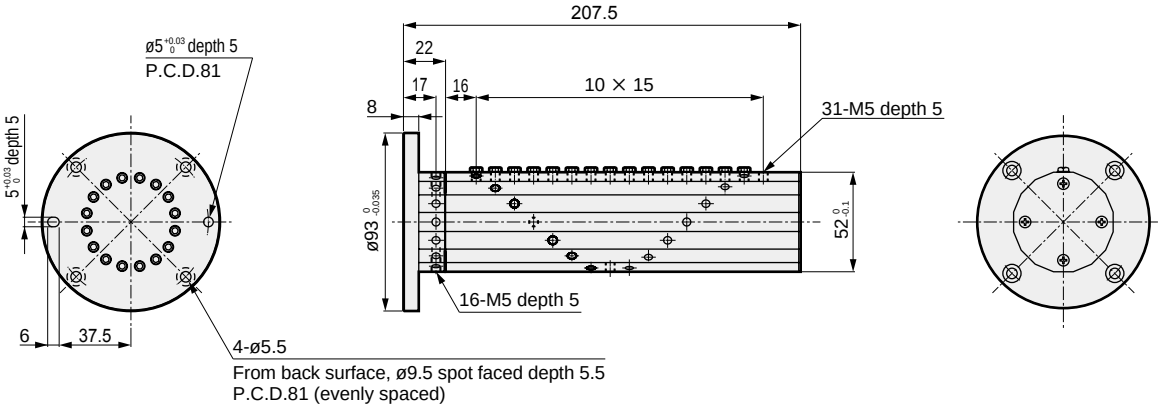

Dimensions (space saving structure)

● RJF-M5-12-S

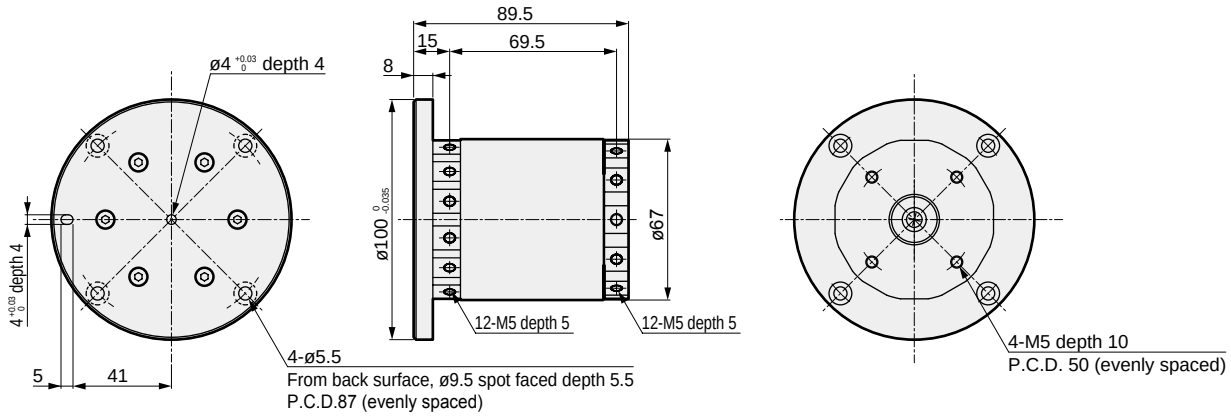

● RJF-M5-16-S

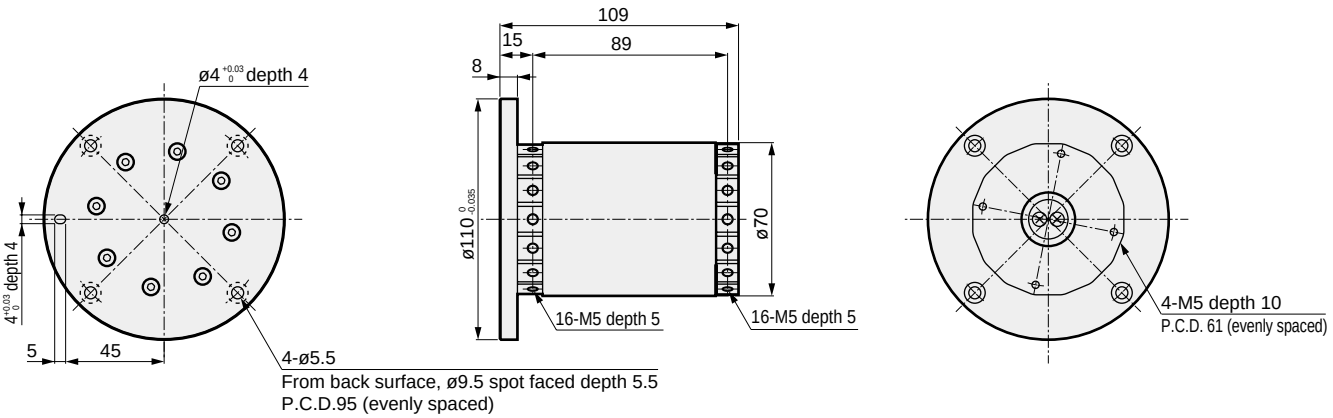

Series variation

Fiber tube

Fiber tube series name		Fiber tube size O.D. x I.D.	Fiber tube color								Dedicated fitting		Page
			Black	White	Clear	Clear blue	Clear green	Yel.	Red	Green			
Antistatic	UP-9102-F1 Series (Note: Only for barbed fitting)	ø1.8×ø1.0	●	●	●	●	●	▲	▲		PTN*2 Series (Note)	Barbed fitting with retainer collar	878
	UP-9402-F1 Series (Note: Only for push-in fitting)	ø1.8×ø1.2	●	●	●	●	●	▲	▲		PG Series (Note)	Push-in fitting	886
Clean-room	EH Series	ø1.8×ø1.2	●		●						CG Series	Push-in fitting	890
Flame-resistant	UP-SR Series	ø1.8×ø1.0							●	●	RG Series	Push-in fitting	899

(Note) As for the antistatic, use a fitting specified for each series. ▲: Made-to-order product
A different fitting cannot be used. (Since the fiber tube may come off or leakage may occur.)

Features

The fiber tube is an extremely thin, flexible air tube comparable to the lead wire. It enables easy piping in narrow spaces or short distances. In addition, the tube resistance (tube stress) after piping is much smaller than those of conventional products and has almost no effect on the device accuracy. The fiber tube is suitable for small bore size air cylinder piping and saves system space.

Energy saving/space saving

O.D. ø1.0 ultra thin size.
Can considerably save piping space. In addition, the small tube capacity can save energy.

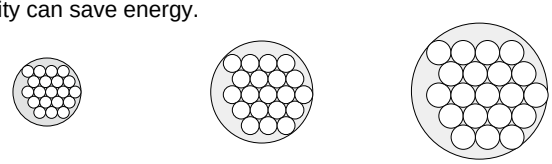

Fiber tube
ø1.8 x **20** tubes:**80 mm²**

Conventional products
ø3.2 x **20** tubes:**253mm²**

Conventional products
ø4.0 x **20** tubes:**396mm²**

No effect on device accuracy

As the tube stress after piping is only the same level as that of lead wire, the effect on device accuracy is extremely small.

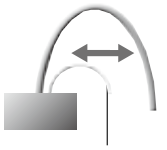

Pipe stress is small

Flexible piping

Highly bendable and flexible in mounting, enabling piping in narrow spaces or short distances from 200 to 300 mm.

Various types are available

Antistatic and dust-proof tube (UP-F1 Series)

Antistatic treated to prevent accumulation of static electricity and dust.

Clean room (EH Series)

Clean-room specifications with highly corrosion-resistant materials (tube: special polyolefin, fitting: stainless steel).
Ideal for environments that require cleanness (semiconductor manufacturing, medical and food fields, etc.)

Flame-resistant (UP-SR Series)

Flame-resistant resin fiber tube and fitting (push ring and elbow body) (UL94 standard V-0 or equivalent).

Dedicated fittings

Push-in (PG/CG/RG Series)

Push and hold the push ring of the fitting and attach or detach the tube. (UP-9402-F1 Series, EH Series, UP-SR Series)

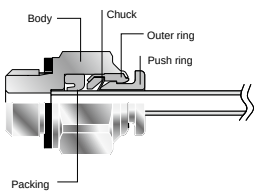

With retainer collar (PTN*2 Series)

Put the retainer collar on the fiber tube, connect the fiber tube to the dedicated fitting and protect with the retainer collar. (UP-9102-F1 Series)

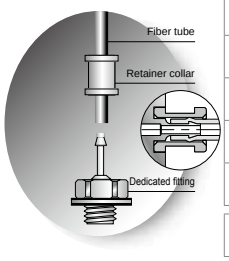

Series variation

Antistatic fiber tube

Tube size ø1.8 x ø1.0

Dedicated fitting

● Port size: M3, M5, R1/8, ø4, ø6

CAD

Antistatic fiber tube

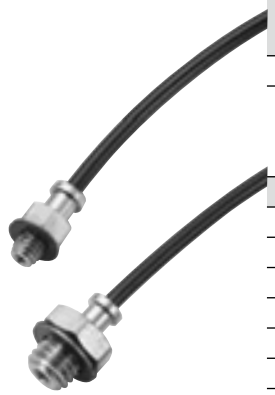

O.D. x I.D. (mm)
ø1.8×ø1.0

Color
Black
White
Transparent
Transparent blue
Transparent green
Red (made to order)
Yellow (made to order)

Dedicated fitting

■ **Straight**

Compatible tube O.D. ø
1.8

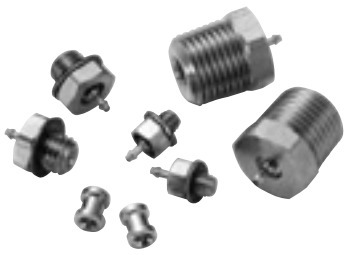

■ **Elbow**

Compatible tube O.D. ø
1.8



■ **Barbed nipple**

Compatible tube O.D. ø
1.8/3.2
1.8/4
1.8/6

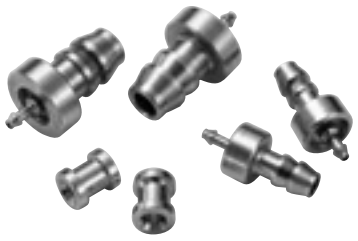

Fiber tube

Specifications

● Tube

Item	UP-9102-20-*-F1
Working fluid	Compressed air
Working pressure (20°C (68°F)) (*1)	-100 kPa (≈-15 psi, -1 bar) to 0.7 MPa (≈100 psi, 7 bar)
Ambient temperature °C	-10 (14°F) to 60 (140°F) (no freezing)
O.D. x I.D. mm	1.8×1.0
Inside diameter accuracy	±0.1
Diametral accuracy	±0.1
Min. bending radius (JIS B 8381) mm	2
Min. installation radius mm	4
Burst pressure (20°C (68°F)) MPa	2.1 (≈300 psi, 21 bar) (reference value)
Volume resistance ratio Ω·cm	1 x 10^8 or less (black) 1 x 10^{12} or less (other than black)
Material	Conductive urethane
Color	Black, white, transparent (clear / blue / green), yellow (*2), red (*2)
Applicable fitting	PTN* Series (barbed) (*5)

● Dedicated fitting

Item	PTN*
Port size	M3, M5, R 1/8, ø3.2 (*4), ø4 (*4), ø6 (*4)
Working fluid	Compressed air
Working pressure	-100 kPa (≈-15 psi, -1 bar) to 0.7 MPa (≈100 psi, 7 bar)
Ambient temperature °C	-10 (14°F) to 60 (140°F) (no freezing)
Tube used	UP-9102-20-*-F1 (*6)
Effective cross-sectional area mm^2	Straight, barbed nipple: 0.3 elbow: 0.2
Flow rate (*3) ℓ/min(ANR)	Straight, barbed nipple: 20 elbow: 13

*1: For the working pressure, refer to the figure of “Ambient temperature and pressure (use/burst)”.
*2: Made-to-order product.
*3: Flow rate is the atmospheric pressure conversion at 0.5 MPa.
*4: Compatible tube: Soft nylon tube (model No. FH-3224, F-1504, F-1506)
Urethane tube (model No. U-9504, U-9506)
***5: Not available for PG, CG, RG Series (push-in).**
***6: Fiber tube for push-in fitting (UP-9402, EH-5802) is not available.**

How to order

● Tube

UP-91 02 - 20 - W - F1

- 02: Tube size ø1.8×ø1.0 (O.D. x I.D.)
- 20: Length per roll 20 m
- W: Ⓐ Tube color
- F1: Antistatic

Ⓐ Tube color	
Blank	Black
W	White
C	Transparent
CB	Transparent blue
CG	Transparent green
Y	Yellow (Note)
R	Red (Note)

Note: Made-to-order product.

● Dedicated fitting Sales unit is 1 set (10 pcs.)

[Straight]

PTN2 - M3 (Ⓐ)

Ⓐ Port size	
M3	M3×0.5
M5	M5×0.8
6	R 1/8

[Elbow]

PTNL2 - M3 (Ⓐ)

Ⓐ Port size	
M3	M3×0.5
M5	M5×0.8

[Barbed nipple]

PTN2 4 - 0 (Ⓐ)

Ⓐ Compatible tube O.D. (Note)	
4	ø3.2,ø4
6	ø6

Note: Compatible tube
Soft nylon tube (model No. FH-3224, F-1504, F-1506)
Urethane tube (model No. U-9504, U-9506)

Clean-room specifications

(Catalog No. CB-033SA)

PTN2 -.....- P80

UP-9102 -.....- P80

Characteristics graph

● Ambient temperature and pressure (use/burst)

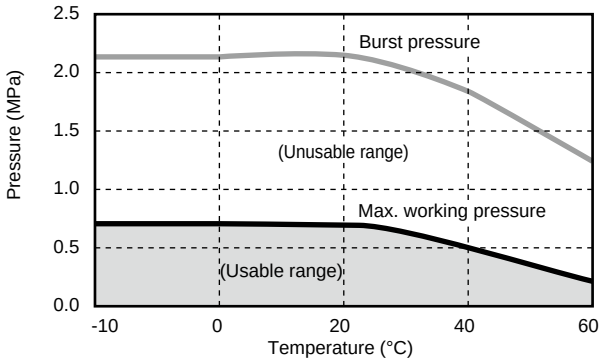

● Tube length and effective cross-sectional area

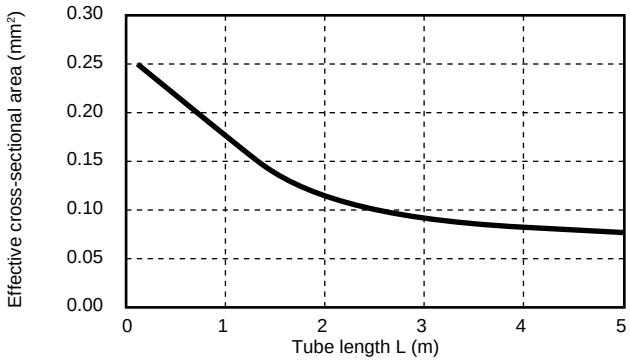

Internal structure and parts list

● Straight

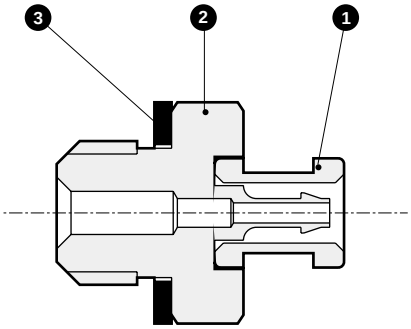

● Elbow

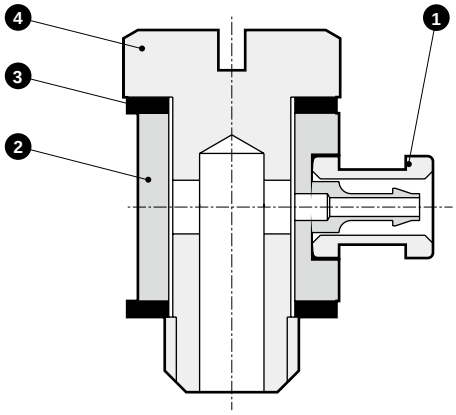

● Barbed nipple

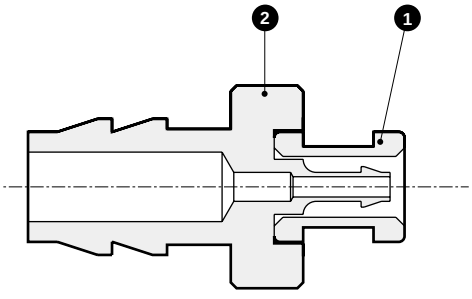

● Parts list

No.	Name	Material
1	Collar	Copper alloy (with electroless nickeling)
2	Body	Copper alloy (with electroless nickeling)
3	Gasket	Stainless steel + nitrile rubber
4	Shaft	Copper alloy (with electroless nickeling)

Dimensions CAD

[Sales unit is 10 pcs./bag]

● Straight

[PTN2-M3]

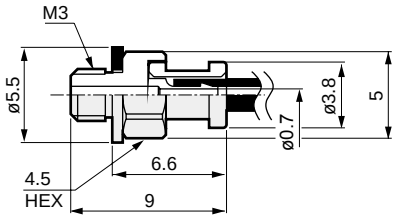

Weight/0.7 g

[PTN2-M5]

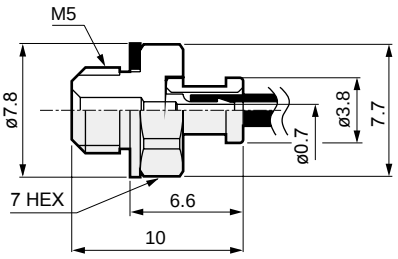

Weight/1.6g

[PTN2-6]

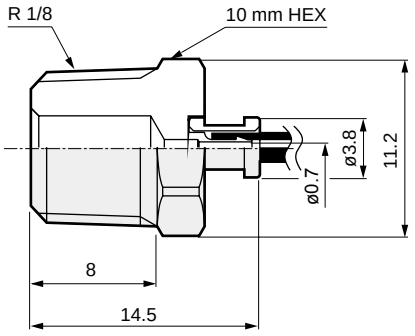

Weight/5.8g

● Elbow

[PTNL2-M3]

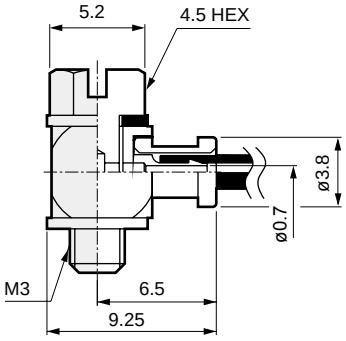

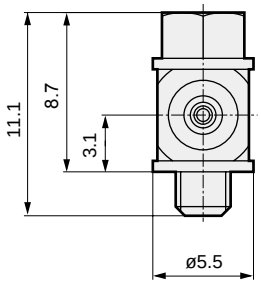

Weight/1.7g

[PTNL2-M5]

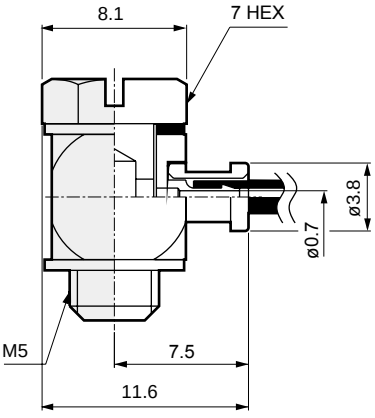

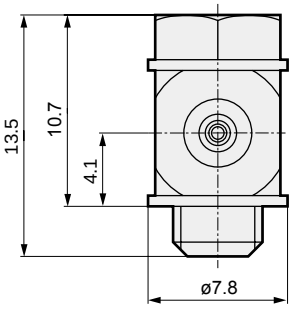

Weight/4.2g

● Barbed nipple

[PTN24-0]

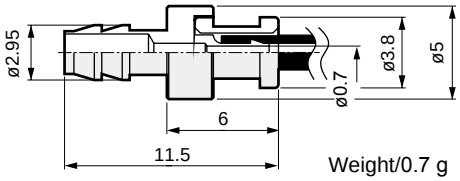

Weight/0.7 g

[PTN26-0]

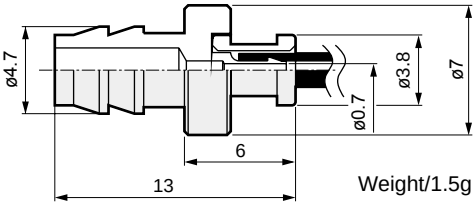

Weight/1.5g

⚠ Safety precautions

■ Design/selection

● This is an extremely fine tube, so the effective cross-sectional area is extremely small. Use with a standard cylinder may cause failure to obtain set speed, delayed response, or knocking.
The pipe length should be 1 m or less, and the fine speed cylinder (catalog No. CC-N-360A) be used.

● Because the fiber tube is thin, the vacuum in the vacuum device increases and delays the response of the vacuum switch during vacuum burst when used with an ejector.

■ Installation/adjustment (piping)

● Tighten pipes with the appropriate torque.
The purpose is to prevent air leakage and damage to bolts. First tighten the bolts by hand to ensure that the threads are not damaged, then use a tool. Check that the tool's hexagon face and wrench are the correct size.
[reference value]

Port size	Tightening torque N·m
M3	0.3 to 0.5
M5	1 to 1.5
R 1/8	3 to 5

* The M3 thread could be damaged by excessive tightening torque.

● On equipment that requires antistatic measures, ground the part where the fitting has been connected.
Electrostatic discharge could build up in the tubing if the part is not grounded.

● The elbow be rotated randomly and installed, but it cannnot be rotated after assembly.

● R 1/8 does not have sealant. Separately prepare sealing tape, etc.

■ Use/maintenance

● Mounting and removal

Installation

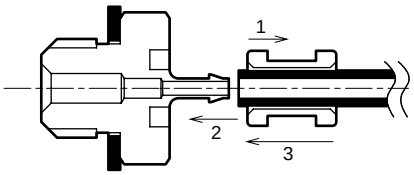

[Fig. 1]

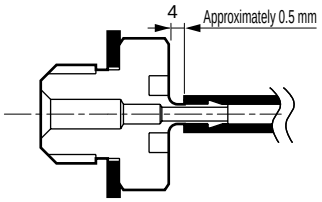

[Fig. 2]

(1) Insert the collar into the tube. (Fig. 1)
(2) Insert the tube to position 4. (Fig. 2)
(3) Insert the collar into the fitting. (Fig. 1)
(4) Check that the tube is not dislocated from the fitting.
Note: Do not tilt the tube when inserting it into the far end of the fitting. The barbed fitting is thin and could be damaged by a lateral load.

Removal

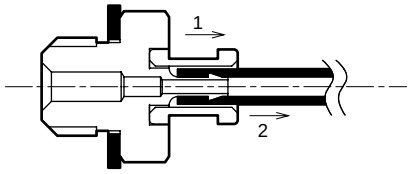

(1) Pull the collar out with a pair of needle-nosed pliers, etc.
(2) Pull out the tube.
(3) When reusing the tube, cut 10 mm or more off the end.
Note: If the tube is pulled forcefully while the collar is attached, the tube could be deformed, the flow obstructed, or the tube dislocated during use.

● Precautions after mounting

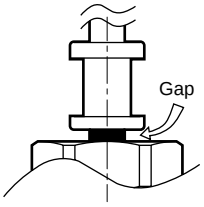

(1) Check that there is no gap between the collar and fitting.
(The fitting could break or the tube could be dislocated.)

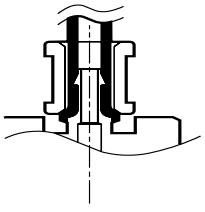

(2) If the collar does not go in, the tube may ride up on it as shown above. Follow mounting and removal procedures and assemble the collar at a position 0.5 mm from the tube.

Series variation

Antistatic and clean-room fiber tube (for push-in fitting)

Tube size I.D. ø1.8 x ø1.2

Push-in fitting for fiber tube

Port size M3, M5, R1/8, ø4

Antistatic fiber tube (for push-in fitting) UP		Fiber tube for clean-room (for push-in fitting) EH	
	O.D. x I.D. (mm)		O.D. x I.D. (mm)
	ø1.8×ø1.2		ø1.8×ø1.2
	Color		Color
	Black		Black
	White		Transparent
	Transparent		
	Transparent blue		
	Transparent green		
	Yellow (made to order)		
	Red (made to order)		

Push-in fitting for fiber tube (standard)

■ Straight

Single straight
PG-S2-□



Port size
M3
M5
R1/8

·Refer to page: 887

Single straight (round)
PG-S2-M3-S



Port size
M3

·Refer to page: 887

Straight
PG-S2-0



·Refer to page: 887

Bulkhead
PG-S2-0-X



·Refer to page: 887

■ Elbow

Single elbow
PG-L2-□



Port size
M3
M5
R1/8

·Refer to page: 888

■ Tee

Double tee
PG-T2-□



Port size
M3
M5

·Refer to page: 888

Tee
PG-T2-0



·Refer to page: 888

D tee
PG-T2-□-D



Port size
M3
M5

·Refer to page: 889

■ Plug

Plug reducer
PG-S2-4P



Port size
ø4

·Refer to page: 889

Blanking plug
PG-P2-B



·Refer to page: 889

● Sales unit of standard is 10 pcs./bag.

Push-in fitting for fiber tube (clean-room)

■ Straight

Single straight
CG-S2-□



Port size
M3
M5
R1/8

·Refer to page: 891

Straight
CG-S2-0



·Refer to page: 891

Bulkhead
CG-S2-0-X



·Refer to page: 891

■ Elbow

Single elbow
CG-L2-□



Port size
M3
M5
R1/8

·Refer to page: 892

■ Tee

Double tee
CG-T2-□



Port size
M3
M5

·Refer to page: 892

■ Tee

Tee
CG-T2-0



·Refer to page: 892

● Sales unit of clean-room is 1 pc./1 bag.



Fiber tube (for push-in fitting)

- O.D.: ø1.8 x I.D.: ø1.2
- Antistatic (UP-9402-F1)
- Clean-room (EH-5802)

RoHS

Specifications

Model No.	Antistatic UP-9402-F1	Clean-room EH-5802
Working fluid	Compressed air	
Working pressure(20°C)(Note1)	-100kPa to 0.8MPa	-100kPa to 1.0MPa
Ambient temperature °C	-10 to 60 (no freezing)	
O.D. x I.D. mm	ø1.8 x ø1.2	
Inner diameter accuracy mm	±0.1	
Outer diameter accuracy mm	±0.1	
Durometer hardness	HDA 94	HDD 58
Min. bending radius(JIS B 8381) mm	4	5
Min. mounting radius mm	4	7
Burst pressure(20°C) MPa	2.5	3.8
Volume resistance ratio Ω·cm	10^{10} to 10^{12}	-
Material	Antistatic urethane	Special polyolefin
Color	Black/white/transparent/transparent blue/ transparent green/yellow (*2)/red (*2)	Black/Transparent
Applicable fitting	PG/CG Series (push-in) *3	

*1: For the working pressure, refer to the graph of “Ambient temperature and pressure (use/burst)”.
*2: Yellow and red are made-to-order products.
***3: This cannot be used with a barbed fitting (PTN*).**

How to order

● Antistatic

UP-94 **02** - **20** - **W** - **F1**

- 02: Tube size ø1.8 x ø1.2 (O.D. x I.D.)
- 20: Length per roll 20 m
- W: Tube color
- F1: Antistatic

Tube color	
Blank	Black
W	White
C	Transparent
CB	Transparent blue
CG	Transparent green
Y	Yellow (Note)
R	Red (Note)

Note: It is a made-to-order product.

● Clean-room

EH-58 **02** - **20** - **C**

- 02: Tube size ø1.8 x ø1.2 (O.D. x I.D.)
- 20: Length per roll 20 m
- C: Tube color

Tube color	
Blank	Black
C	Transparent

Characteristics graph

● Ambient temperature and pressure (use/burst)

UP-9402-F1

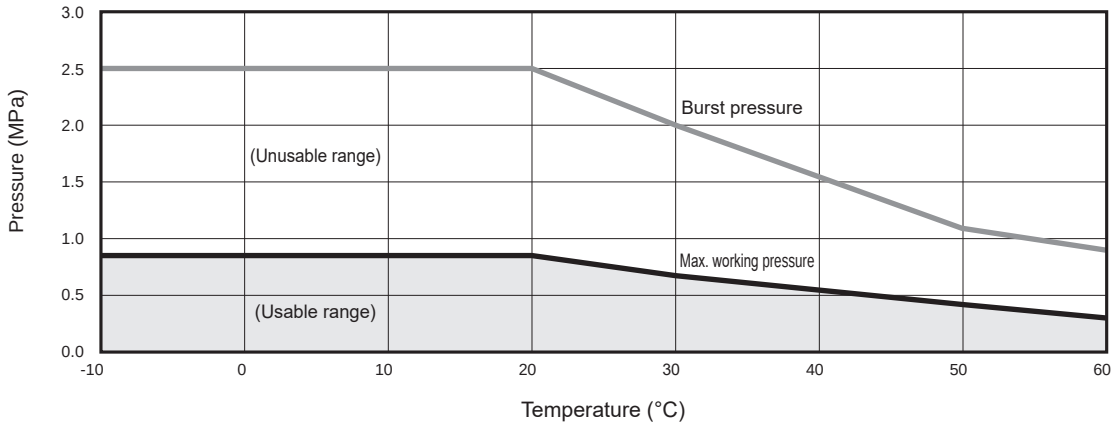

EH-5802

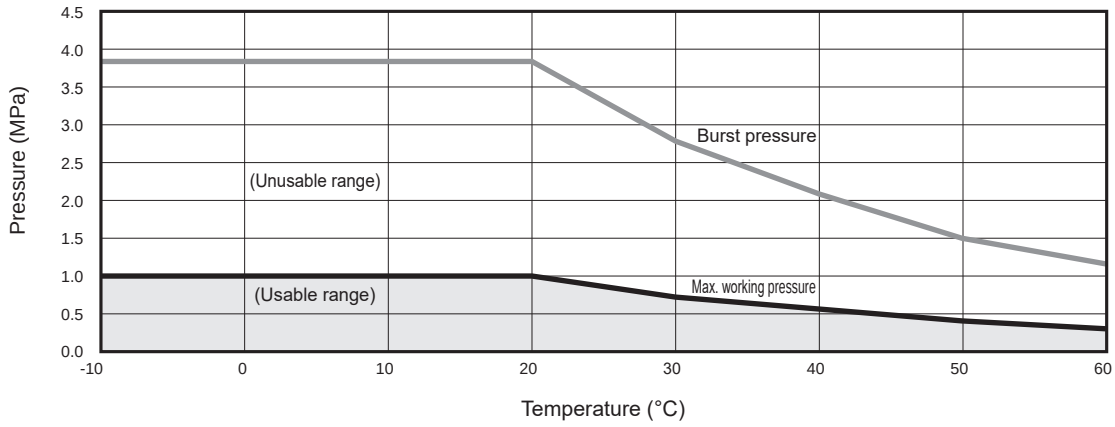

● Tube length and effective cross-sectional area

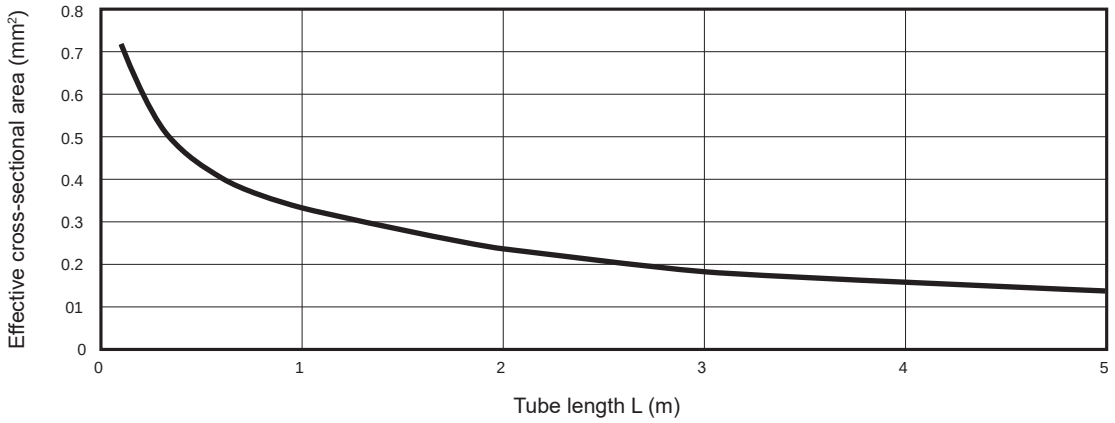

The tubing inlet and outlet are measured with a single straight (PG-S2-M5) attached.

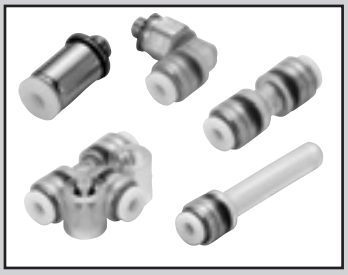

Push-in fitting for fiber tube

Standard PG Series

- Compatible tube O.D.: ø1.8
- Port size: M3 to R1/8

RoHS CAD

Specifications

Model No.		PG Series	
Working fluid		Compressed air	
Working pressure		-100kPa (≈-15 psi, -1 bar) to 1.0 MPa (≈150 psi, 10 bar)	
Ambient temperature	°C	-10 (14°F) to 60 (140°F) (no freezing)	
Tube used		Fiber tube (UP-9402-F1, EH-5802)	*1

***1: Fiber tube for barbed fitting (UP-9102-F1) is not available.**
*2: Sales unit is 1 set (10 pieces).

How to order

* Refer to the model No. on the dimensions page (pages 887 to 889) for the model No. combination.

● Standard

PG - S 2 - M3 - S

Ⓐ Shape
Ⓑ Compatible tube O.D. ø1.8
Ⓒ Port size
Ⓓ Other combinations

Ⓐ Shape	
S	Straight
L	Elbow
T	Tee
P	Plug

Ⓒ Port size	
M3	M3x0.5
M5	M5x0.8
6	R1/8
0	No thread
4P	Plug for ø4
B	Blanking plug

Ⓓ Other combinations	
S	Round shape
D	D type
X	Bulkhead

Note: Sales unit is 10 pcs./bag.

Internal structure and parts list

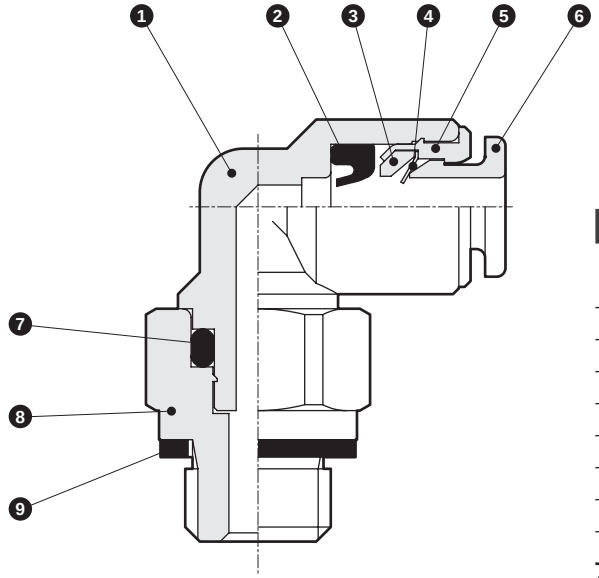

No.	Part name	Material
1	Body *1	Polypropylene (translucent)
		Copper alloy (electroless nickeling)
2	Packing	Hydrogenated nitrile rubber
3	Chuck holder	Polypropylene (translucent)
4	Chuck	Stainless steel
5	Outer ring	Copper alloy (electroless nickeling)
6	Push ring *2	Polypropylene (white)
7	O-ring	Nitrile rubber
8	Nipple	Copper alloy (electroless nickeling) (R1/8 includes sealant.)
9	Gasket	Stainless steel + nitrile rubber

*1: The body of the single straight, single straight (round) and bulkhead is copper alloy (electroless nickeling).
*2: The PG Series is white.

Dimensions: Single straight/single straight (round)/straight/bulkhead

[Sales unit is 10 pcs./bag]

Single straight

● PG-S2-□

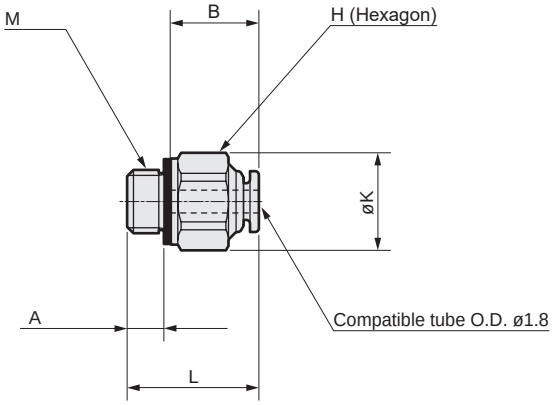

● PG-S2-6

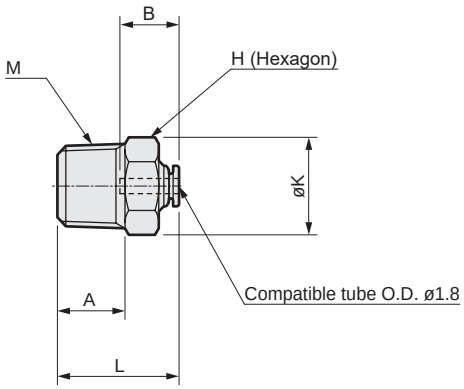

Model No.	M	H	K	L	A	B	Min. bore size	Eff. X-sectional area mm²	Weight g
PG-S2-M3	M3x0.5	5.5	6	10.7	2.4	7	1.5	0.92	1.1
PG-S2-M5	M5x0.8	7	7.7	10.4	2.9	7	1.5	0.92	1.8
PG-S2-6	R1/8	10	11.6	14.4	8	7	1.5	0.97	5.6

Single straight (round)

● PG-S2-M3-S

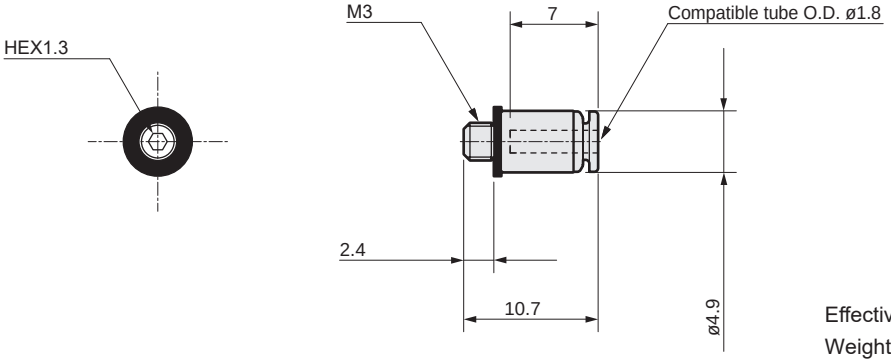

Effective cross-sectional area: 0.92 mm²
Weight: 0.7g

Straight

● PG-S2-0

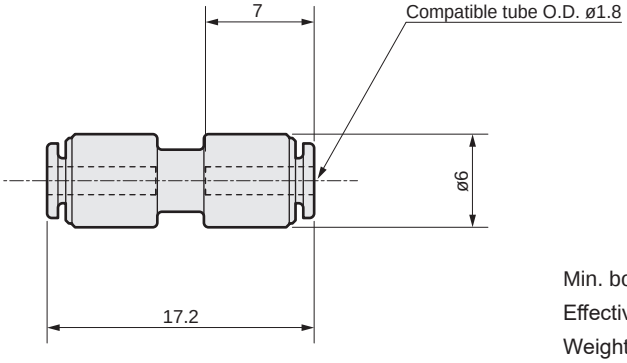

Min. bore size: ø1.5
Effective cross-sectional area: 0.82mm²
Weight: 0.7g

Bulkhead

● PG-S2-0-X

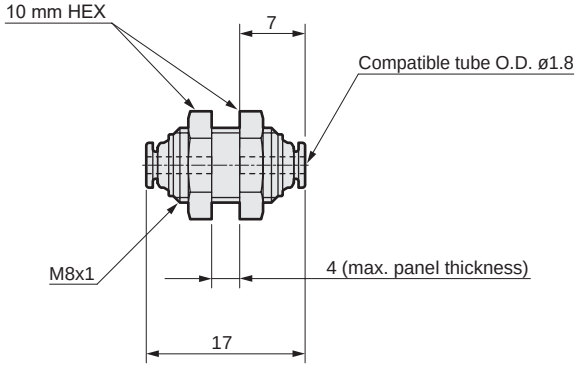

Min. bore size: ø1.5
Effective cross-sectional area: 0.85mm²
Weight: 5.3g

Dimensions: Single elbow/double tee/tee

[Sales unit is 10 pcs./bag]

Single elbow

● PG-L2-□

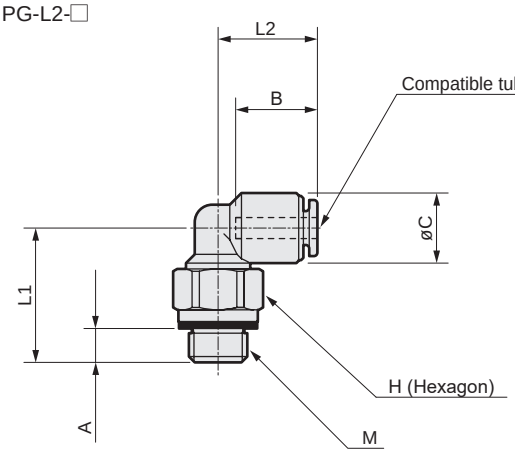

● PG-L2-6

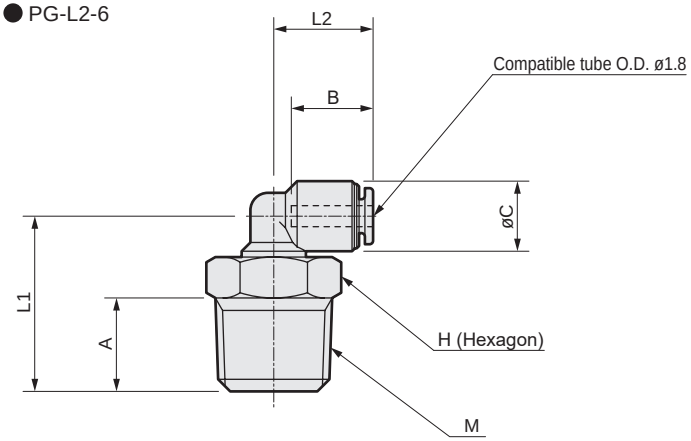

Model No.	M	H	L1	L2	A	B	C	Min. bore size	Eff. X-sectional area mm²	Weight g
PG-L2-M3	M3x0.5	5.5	11	8.5	2.4	7	6	1.5	0.83	4
PG-L2-M5	M5x0.8	7	11.5	8.5	2.9	7	6	1.5	0.83	4.8
PG-L2-6	R1/8	10	15	8.5	8	7	6	1.5	0.70	8.6

Double tee

● PG-T2-□

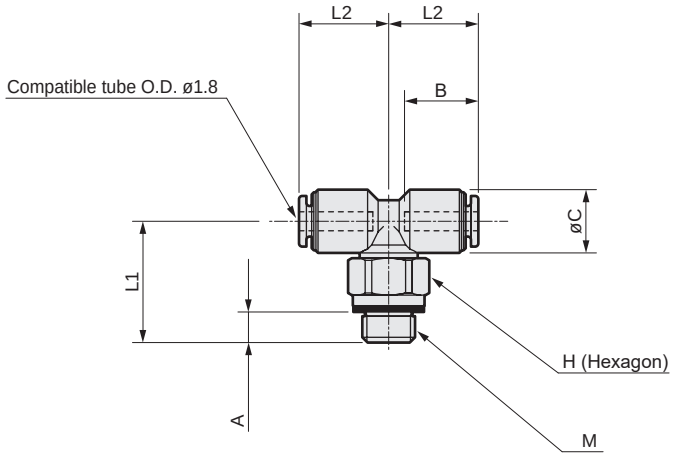

Model No.	M	H	L1	L2	A	B	C	Min. bore size	Eff. X-sectional area mm²	Weight g
PG-T2-M3	M3x0.5	5.5	11	8.5	2.4	7	6	1.5	1.10	1.4
PG-T2-M5	M5x0.8	7	11.5	8.5	2.9	7	6	1.5	1.25	3.1

Tee

● PG-T2-0

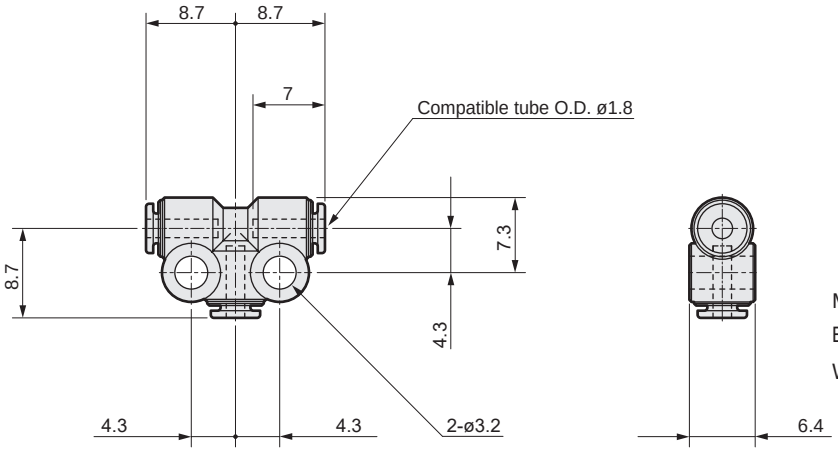

Min. bore size: ø1.5

Effective cross-sectional area: 0.90mm²

Weight: 3.9g

Dimensions: D tee/plug reducer/blanking plug

[Sales unit is 10 pcs./bag]

D tee

● PG-T2-□-D

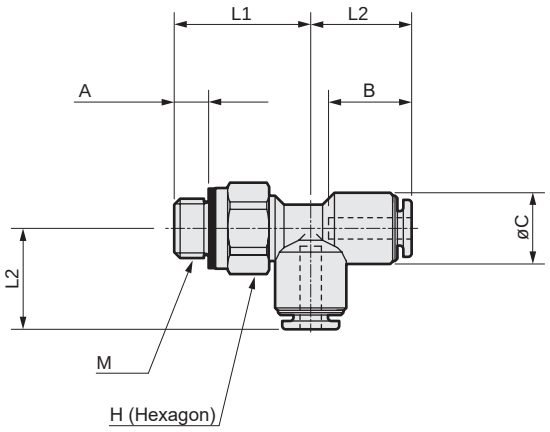

Model No.	M	H	L1	L2	A	B	C	Min. bore size	Eff. X-sectional area mm²	Weight g
PG-T2-M3-D	M3x0.5	5.5	11	8.5	2.4	7	6	1.5	1.05	2.1
PG-T2-M5-D	M5x0.8	7	11.5	8.5	2.9	7	6	1.5	1.40	2.2

Plug reducer

● PG-S2-4P

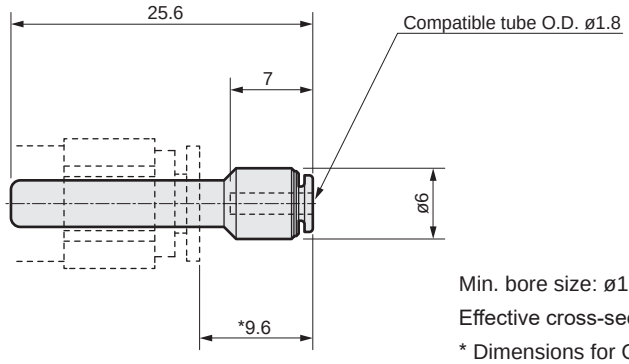

Min. bore size: ø1.5
Effective cross-sectional area: 0.97mm²
* Dimensions for GWS4-M5 fitting.
Weight: 0.5g

Blanking plug

● PG-P2-B

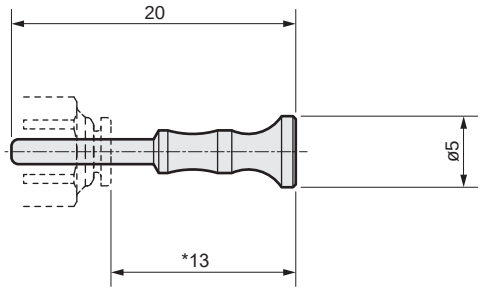

Material: Polypropylene (PP)
* Dimensions for PG/CG Series fittings.
Weight: 0.1g

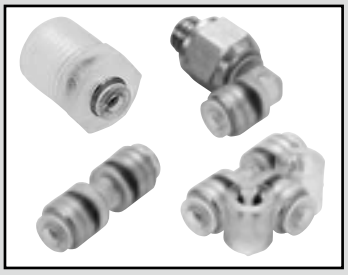

Push-in fitting for fiber tube

Clean-room CG Series

- Compatible tube O.D.: ø1.8
- Port size: M3 to R1/8

RoHS CAD

Overview

The CG Series includes fittings for clean environments for semiconductor manufacturing, medical equipment and foodstuffs.
P.P. resin, stainless steel and EPDM rubber are provided to improve corrosion resistance.
This product is assembled with oil-prohibited specifications and shipped in clean packaging.

Specifications

Model No.	CG Series
Working fluid	Clean air (*1)
Working pressure	-100kPa (≈-15 psi, -1 bar) to 1.0 MPa (≈150 psi, 10 bar)
Ambient temperature °C	-10 (14°F) to 60 (140°F) (no freezing)
Lubricant	Oil-prohibited
Tube used	Fiber tube (UP-9402-F1, EH-5802) *2

*1: Rubber EPDM material is used, so this product cannot be used with fluids that contain mineral oil.
***2: Fiber tube for barbed fitting (UP-9102-F1) is not available.**
*3: Sales unit is one piece.

How to order

* Refer to the model No. on the dimensions page (pages 891 and 892) for the model No. combination.

● Clean-room

CG - S 2 - 0 - X

Ⓓ Other combinations
Ⓐ Shape
Ⓒ Port size
Ⓑ Compatible tube O.D. ø1.8

Ⓐ Shape	
S	Straight
L	Elbow
T	Tee

Note: Sales unit is 1 pc.

Ⓒ Port size	
M3	M3×0.5
M5	M5×0.8
6	R1/8
0	No thread

Ⓓ Other combinations	
X	Bulkhead

Internal structure and parts list

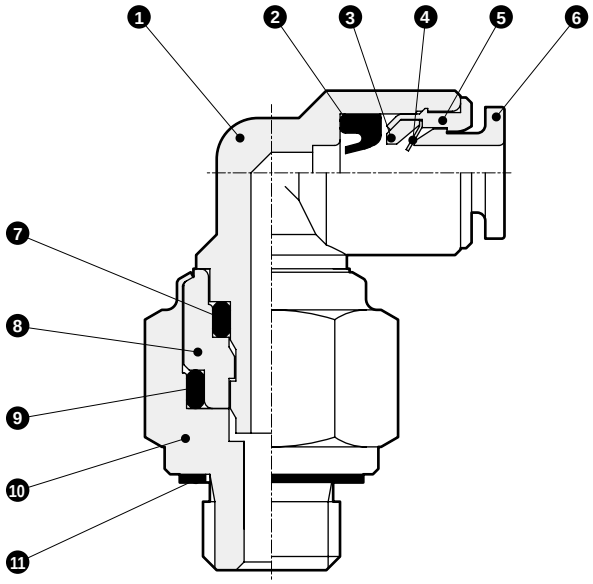

No.	Part name		Material
1	Body *1		Polypropylene (translucent)
			Stainless steel (SUS304)
2	Packing		Ethylene propylene rubber
3	Chuck holder		Polypropylene (translucent)
4	Chuck		Stainless steel (SUS301)
5	Outer ring		Stainless steel (SUS304)
6	Push ring		Polypropylene (translucent)
7	O-ring		Ethylene propylene rubber
8	Stopper		Stainless steel (SUS304)
9	O-ring		Ethylene propylene rubber
10	Nipple	M3,M5	Stainless steel (SUS304)
		R1/8	Polypropylene (translucent)
11	Gasket		Stainless steel + fluoro rubber

*1: The body of the single straight (M3, M5) and bulkhead is stainless steel.

⚠ CAUTION

The durability of the CG Series packing (material: EPDM) is susceptible to mineral oil, so it cannot be used to pipe general pneumatic components.
The R1/8 thread does not have a sealant on the threads.
Use the PG Series for piping to general pneumatic components.

Dimensions: Single straight/straight/bulkhead

[Sales unit is 1 pc./bag]

Single straight

● CG-S2-□

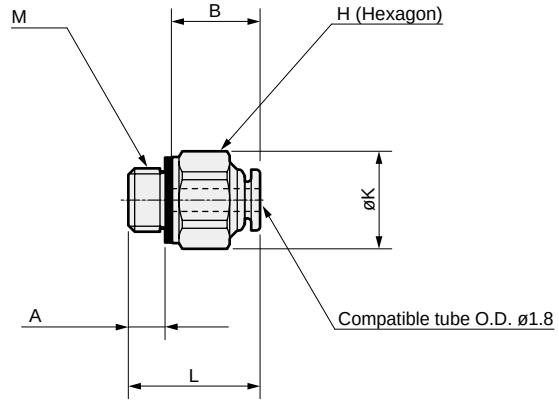

● CG-S2-6

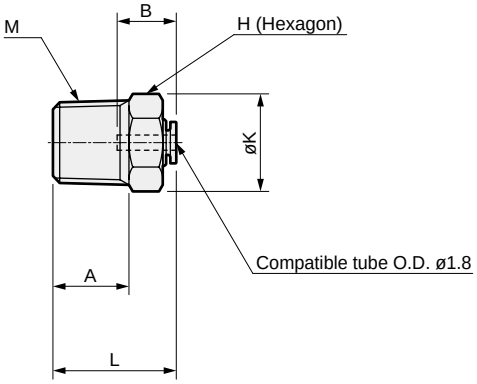

Model No.	M	H	K	L	A	B	Min. bore size	Eff. X-sectional area mm²	Weight g
CG-S2-M3	M3×0.5	5.5	6	10.7	2.7	7	1.5	0.92	0.8
CG-S2-M5	M5×0.8	7	7.7	10.4	3.2	7	1.5	0.92	1.2
CG-S2-6	R1/8	10	11.6	14.6	9	7	1.5	0.97	1.1

Straight

● CG-S2-0

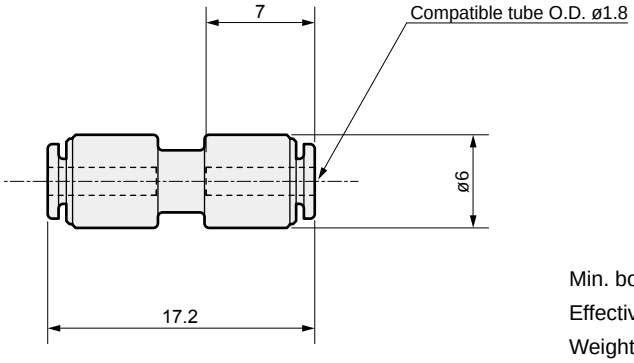

Min. bore size: ø1.5
Effective cross-sectional area: 0.82mm²
Weight: 0.5g

Bulkhead

● CG-S2-0-X

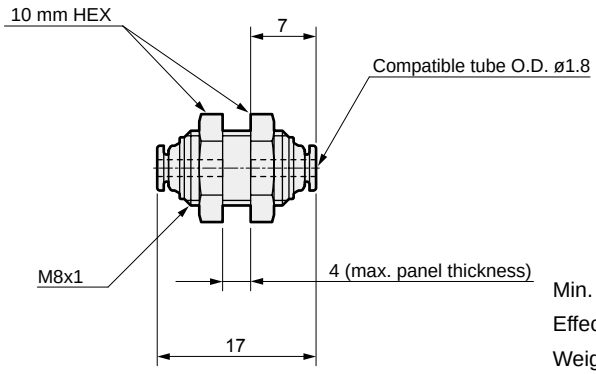

Min. bore size: ø1.5
Effective cross-sectional area: 0.85mm²
Weight: 5.8g

Dimensions: Single elbow/double tee/tee

[Sales unit is 1 pc./bag]

Single elbow

● CG-L2-□

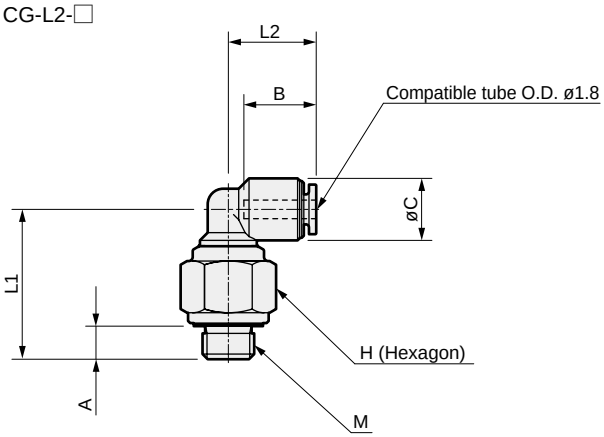

● CG-L2-6

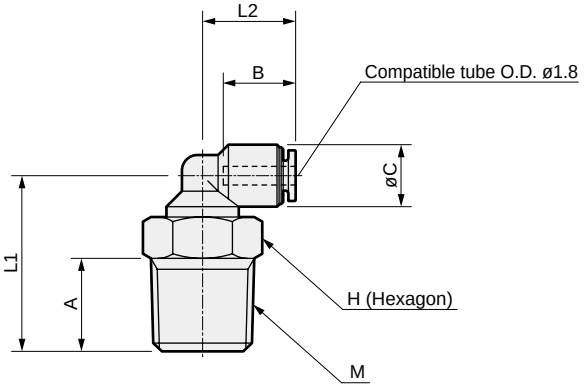

Model No.	M	H	L1	L2	A	B	C	Min. bore size	Eff. X-sectional area mm²	Weight g
CG-L2-M3	M3×0.5	8	14	8.5	2.7	7	6	1.5	0.81	2.7
CG-L2-M5	M5×0.8	8	14.5	8.5	3.2	7	6	1.5	0.81	3.1
CG-L2-6	R1/8	10	17	9	9	7	6	1.5	0.84	1.2

Double tee

● CG-T2-□

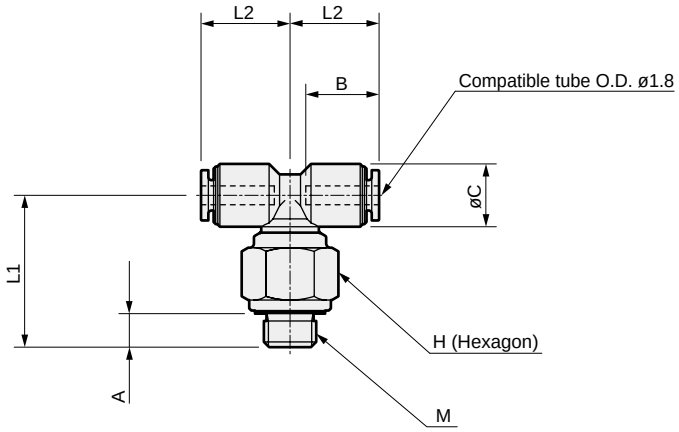

Model No.	M	H	L1	L2	A	B	C	Min. bore size	Eff. X-sectional area mm²	Weight g
CG-T2-M3	M3×0.5	8	14	8.5	2.7	7	6	1.5	0.96	2.8
CG-T2-M5	M5×0.8	8	14.5	8.5	3.2	7	6	1.5	1.25	3.7

Tee

● CG-T2-0

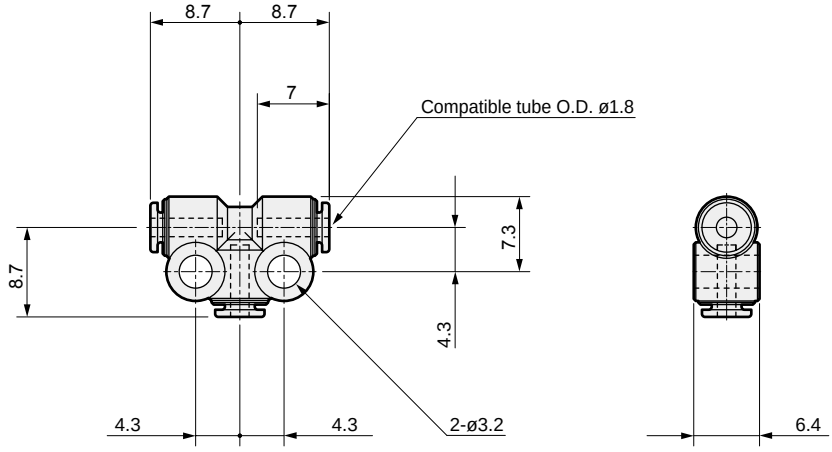

Min. bore size: ø1.5

Effective cross-sectional area: 0.90mm²

Weight: 1.1g

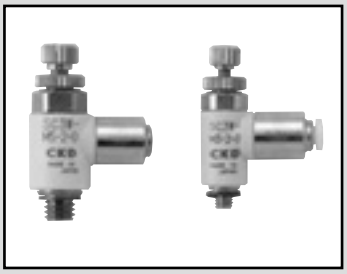

Speed controller, elbow with push-in fitting

SC3W Series (Low speed fiber tube, push-in specifications)

- Compatible tube O.D.: ø1.8
- Port size: M3, M5

JIS symbol 

RoHS **Made-to-order product**

Specifications

Model No.			SC3W	
Compatible tube O.D.			ø1.8	
Working fluid			Compressed air	
Max. working pressure		MPa	1.0 (≈150 psi, 10 bar)	
Min. working pressure		MPa	0.05 (≈7.3 psi, 0.5 bar)	
Proof pressure		MPa	1.5 (≈220 psi, 15 bar)	
Fluid temperature		°C	5 (41°F) to 60 (140°F) (no freezing)	
Ambient temperature		°C	0 (32°F) to 60 (140°F) (no freezing)	
Port size			M3	M5
Dial value (needle position)		(times)	14 or more	16 or more
Free flow	Flow rate	ℓ/min	20	54
	Effective cross-sectional area	mm^2	0.3	0.8
Controlled flow	Flow rate	ℓ/min	5.9	6.7
	Effective cross-sectional area	mm^2	0.08	0.1
Tube used			Fiber tube (UP-9402-F1, EH-5802) *1	
Weight		g	6.1	9.4

***1: Fiber tube for barbed fitting (UP-9102-F1) is not available.**

How to order

- Port size: M3

SC3W-M3-2-O-FL355193

- Port size: M5

SC3W-M5-2-O-FL355194

Flow characteristics

- Low speed

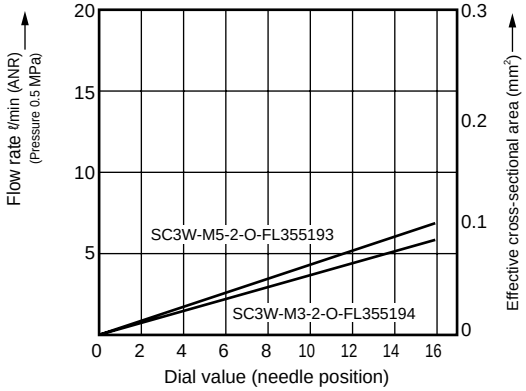

Dimensions

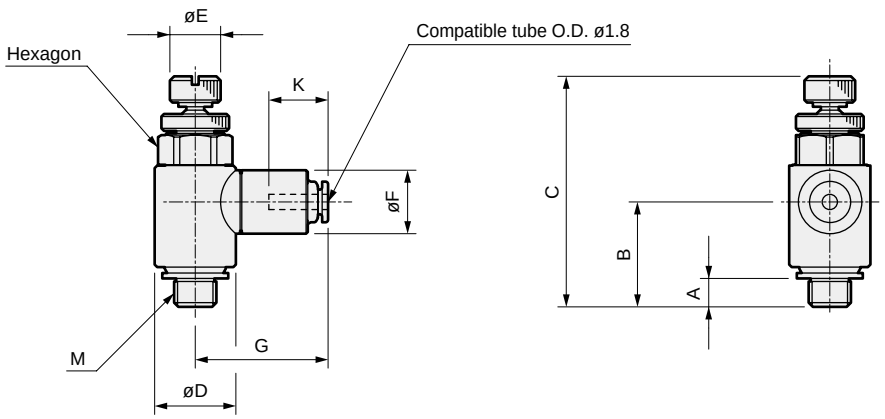

Model No.	M	A	B	C		D	E	F	G	K	Hexagon
				MIN	MAX						
SC3W-M3-2-O-FL355193	M3×0.5	2.4	11.4	25.1	27.6	7.4	5	7.5	15.3	7	7
SC3W-M5-2-O-FL355194	M5×0.8	3.4	12.4	27.2	30.2	9.6	6	7.5	15.3	7	8



Speed controller Line type with push-in fitting

SCL2 Series (Fine speed fiber tube, push-in specifications)

● Compatible tube O.D.: ø1.8, ø4

JIS symbol 

RoHS **Made-to-order product**

Specifications

Model No.			SCL2	
Compatible tube O.D.			ø1.8	
Working fluid			Compressed air	
Max. working pressure		MPa	1.0 (≈150 psi, 10 bar)	
Min. working pressure		MPa	0.1 (≈15 psi, 1 bar)	
Proof pressure		MPa	1.5 (≈220 psi, 15 bar)	
Fluid temperature		°C	5 (41°F) to 60 (140°F) (no freezing)	
Ambient temperature		°C	0 (32°F) to 60 (140°F) (no freezing)	
Dial value (needle position)		(times)	15 or more	
Free flow	Flow rate	ℓ/min	50	
	Effective cross-sectional area	mm^2	0.7	
Controlled flow	Flow rate	ℓ/min	13	
	Effective cross-sectional area	mm^2	0.2	
Tube used			Fiber tube (UP-9402-F1, EH-5802)	*1
Weight		g	12	

***1: Fiber tube for barbed fitting (UP-9102-F1) is not available.**

How to order

● Compatible tube O.D.: ø1.8

SCL2-04-H22-F-FL355195

● Compatible tube O.D.: A side ø4, B side ø1.8

SCL2-04-H42-F-FL355196

● Compatible tube O.D.: A side ø1.8, B side ø4

SCL2-04-H24-F-FL355197

Flow characteristics

● Fine speed

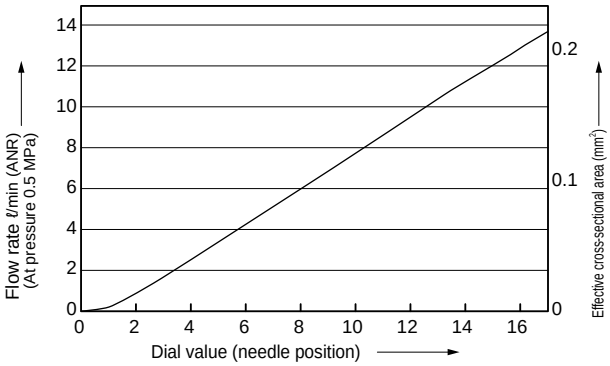

Dimensions

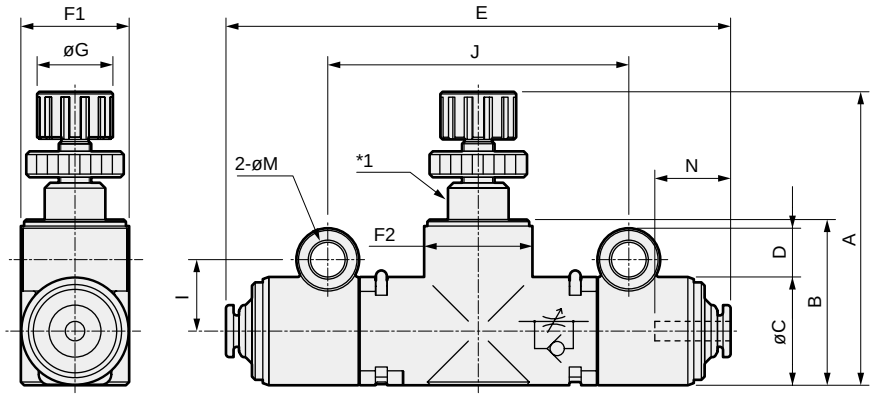

Illustration of combination of compatible tube O.D. (H24/H42 only)

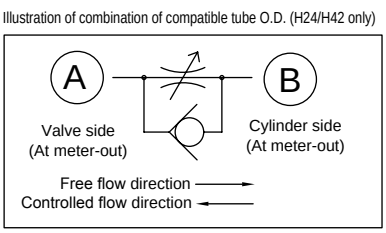

Model No.	Compatible tube O.D.		A		B	C	D	E	F1	F2	G	I	J	M (Mounting hole ø)	N (tube insert length)	
	A side	B side	MAX	MIN											A side	B side
SCL2-04-H22-F-FL355195	ø1.8	ø1.8	27	32	15	10	4.5	47	10	11	7	6.6	28	3.3	7	7
SCL2-04-H42-F-FL355196	ø4	ø1.8						46							12.9	7
SCL2-04-H24-F-FL355197	ø1.8	ø4													7	12.9

Note: F1 and F2 are oval.

⚠Safety precautions

■ Design/selection

⚠CAUTION

- Note when making a selection that the PG and CG Series do not use flame-resistant resins.
- This is an extremely fine tube, so the effective cross-sectional area is extremely small. Use with a standard cylinder may cause failure to obtain set speed, delayed response, or knocking.
  The pipe length should be 1 m or less and the fine speed cylinder (catalog No. CC-N-360A) be used.
- Because the fiber tube is thin, the vacuum in the vacuum device increases and delays the response of the vacuum switch during vacuum burst when used with an ejector.
- The CG Series is for clean blow and washing lines.
  Check with CKD for use in other applications.
  The durability of the CG Series packing (material: EPDM) is susceptible to mineral oil, so it cannot be used to pipe general pneumatic components. Use the PG Series for piping general pneumatic components.

■ Mounting, installation and adjustment

⚠CAUTION

- Use the fiber tubes for push-in fitting (UP-9402-F1, EH-5802) with push-in fittings for fiber tube (PG/CG Series). Tubing could dislocate if fiber tube for CKD barbed fitting (UP-9102-F1), barbed fitting for fiber tubing (PTN Series), or other brands of tubing and fittings are used.
- Cut tubing with a dedicated cutter at a right angle. Do not use worn or damaged tubing. Tubing could be crushed or broken.
  If cut with a dull knife, tubing could be crushed and block the flow path.
- A used tube could be deteriorated or deformed and so always use a new tube.
- Inspect CG-*2-6 regularly.
  The threaded part on CG-*2-6 is made of PP, so leakage could occur if the threaded part comes loose.
  Inspect regularly and tighten to stop any leakage.
  If leakage does not stop after tightening, replace the fitting with a new one.
- The use of oil is prohibited with the CG Series, so the force required to insert the tubing will increase.
  Hold tubing at the base and securely insert until contact is felt depth of 7 mm.
- Tighten pipes with the appropriate torque.
  · The purpose is to prevent air leakage and damage to bolts. First tighten the bolts by hand to ensure that threads are not damaged, then use a tool.
  Check that the tool's hexagon face and wrench are the correct size.
- As the screw of CG-*2-6 is PP, it should be tightened using the following procedure. Tighten as follows: Leave 1.5 to 2 threads at the end of the tapered threads open and wrap 2 to 2.5 times with sealing tape. Tighten lightly by hand, then tighten two to three turns with a tightening tool.
  The part is made of resin so it could deform or break if tightened excessively.

[Reference value]

Port thread	Tightening torque N·m
M3	0.3 to 0.6
M5	1.0 to 1.5
Rc1/8 *	3 to 5

The above values apply when partner threads are JIS B 0203 piping tapered female threads (material C3604BD).
* Applies only when fitting thread parts are metal.

- Check that tubing is not worn or damaged.
  · Tubing could collapse, rupture, or become dislocated.
  · Do not let the tube directly contact other surfaces, as there is a risk of wear or damage.
- On equipment that requires antistatic measures, ground the part where the fitting has been connected. Electrostatic discharge could build up in tubing if the part is not grounded.
- CG-*2-6 (R1/8) does not have sealant. Separately prepare sealing tape, etc.

■ Use/maintenance

⚠CAUTION

Mounting and removal

Mounting

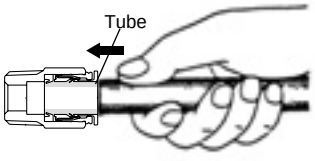

Push the tube in until it contacts the tube end.
Check that the tube does not come off the fitting. Tube fits 7 mm from the end of the fitting body. The end of the mounted tube must be cut at a right angle.

Removal



While pressing down on the push ring with your fingers, the tube can be removed by pulling on it.
Tubing could deform (stretch) if pulled too hard.
Firmly push and hold the push ring and detach the tube. Replace the deformed tubing with a new tubing.

Series variation

Flame-resistant fiber tube (for push-in fitting)

Tube size I.D. ø1.8 x ø1.0

Push-in fitting for fiber tube

Port size M5, R1/8

Flame-resistant fiber tube (for push-in fitting)

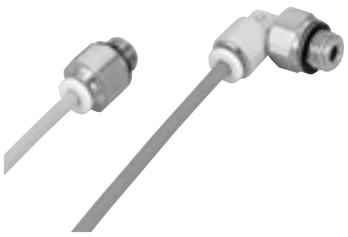

O.D. x I.D.
ø1.8×ø1.0

Color
Red
Green

Push-in fitting for fiber tube

■ Straight	■ Elbow	■ Plug
Single straight RG-S2-□	**Single elbow RG-L2-□**	**Blanking plug RG-P2-B**
Port size: M5, R1/8	Port size: M5, R1/8	
	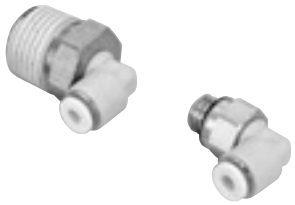	
·Refer to page: 900	·Refer to page: 900	·Refer to page: 900

● Sales unit is 10 pcs./bag.

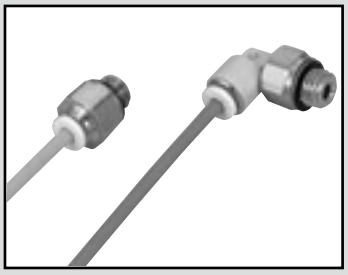

Flame-resistant fiber tube (for push-in fitting)

- O.D.: ø1.8 x I.D.: ø1.0
- Flame-resistant (UP-9102-SR)

RoHS

Specifications

Model No.	Flame-resistant UP-9102-SR
Working fluid	Compressed air
Working pressure (20°C (68°F)) (*1)	-100 kPa (≈-15 psi, -1 bar) to 0.7 MPa (≈100 psi, 7 bar)
Ambient temperature °C	-10 (14°F) to 60 (140°F) (no freezing)
O.D. x I.D. mm	ø1.8×ø1.0
Inside diameter accuracy mm	±0.1
Diametral accuracy mm	±0.1
Durometer hardness	HDA 90
Min. bending radius (JIS B 8381) mm	3
Min. installation radius mm	4
Burst pressure (20°C (68°F)) MPa	2.1 (≈300 psi, 21 bar)
Material	Flame-resistant polyurethane
Color	Green/red (*2)
Applicable fitting	RG Series (push-in)

*1: For the working pressure, refer to the graph of “Ambient temperature and pressure (use/burst)”.
*2: When flame retardant is added, the hue will be lighter instead of bright red or green.

How to order

- Antistatic

UP-91 **02** - **20** - **R** - **SR**

- **02**: Tube size ø1.8 x ø1.0 (O.D. x I.D.)
- **20**: Length per roll 20 m
- **R**: Tube color*
- **SR**: Flame-resistant

Tube color*	
R	Red
G	Green

* When flame retardant is added, the hue will be lighter instead of bright red or green.

Characteristics graph

- Ambient temperature and pressure (use/burst)

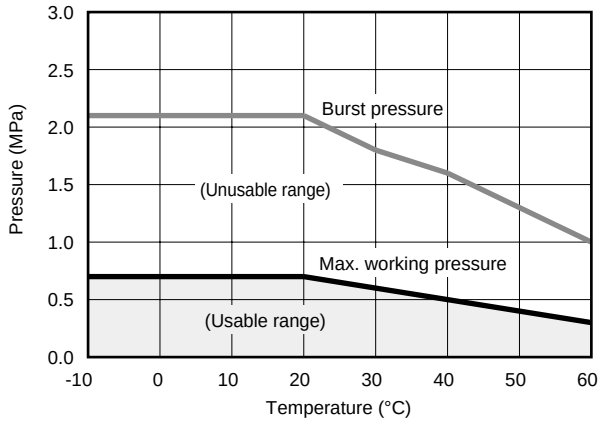

- Tube length and effective cross-sectional area

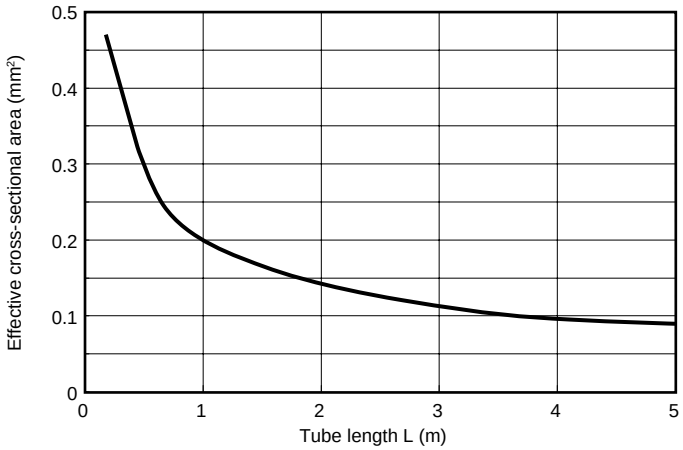

The tubing inlet and outlet are measured with a single straight (RG-S2-M5) attached.

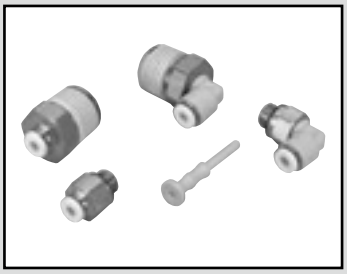

Push-in fitting for fiber tube

Flame-resistant **RG** Series

- Compatible tube O.D. ø1.8
- Port size M5, R1/8

RoHS CAD

Specifications

Model No.	RG Series
Working fluid	Compressed air
Working pressure	-100kPa (≈-15 psi, -1 bar) to 1.0 MPa (≈150 psi, 10 bar)
Ambient temperature °C	-10 (14°F) to 60 (140°F) (no freezing)
Tube used	Flame-resistant fiber tube (UP-9102-SR) (*1)

***1: Fiber tube for barbed fitting (UP-9102-F1) is not available.**

How to order

Refer to the model No. on the dimensions page for the model No. combination.

RG - S 2 - M5

Ⓐ Shape
Ⓒ Port size
Ⓑ Compatible tube O.D.: ø1.8

Ⓐ Shape	
S	Straight
L	Elbow
P	Plug

Ⓒ Port size	
M5	M5×0.8
6	R1/8
B	Blanking plug

Note: Sales unit is 10 pcs./bag.

Internal structure and parts list

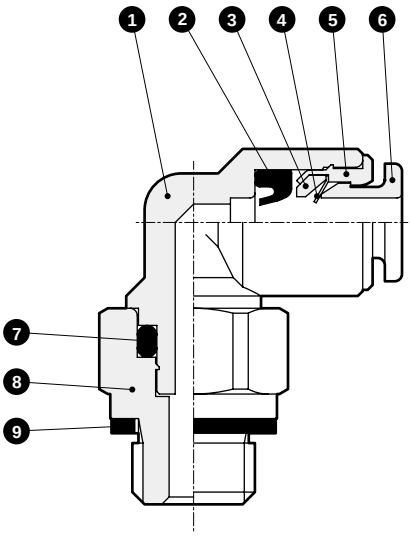

No.	Part name	Material
1	Body *1 (single elbow)	Polybutylene terephthalate (flame-resistant resin *2)
	(single straight)	Copper alloy (electroless nickeling)
2	Packing	Hydrogenated nitrile rubber
3	Chuck holder	Polypropylene
4	Chuck	Stainless steel
5	Outer ring	Copper alloy (electroless nickeling)
6	Push ring *1	Polyamide (flame-resistant resin *2)
7	O-ring	Nitrile rubber
8	Nipple	Copper alloy (electroless nickeling) (R1/8 includes sealant)
9	Gasket	Stainless steel + nitrile rubber

*1: The RG Series push ring and body (single elbow) is light gray (CKD standard color).
*2: UL94 Standards V-0 equivalent

Dimensions: Single straight/single elbow/blanking plug

[Sales unit is 10 pcs./bag]

Single straight

● RG-S2-M5

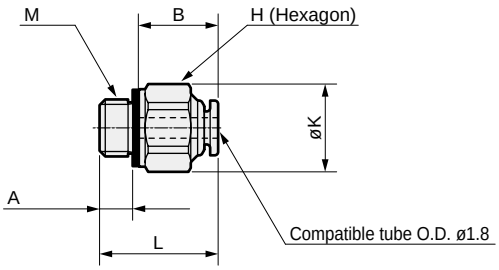

● RG-S2-6

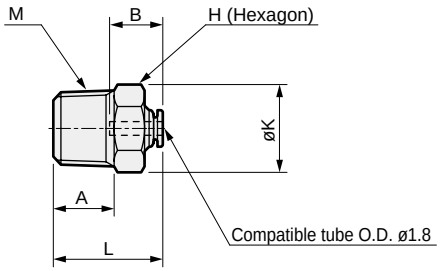

Model No.	M	H	K	L	A	B	Min. bore size	Eff. X-sectional area mm²	Weight g
RG-S2-M5	M5×0.8	7	7.7	10.4	2.9	7	1.5	0.56	1.8
RG-S2-6	R1/8	10	11.6	14.4	8	7	1.5	0.56	5.6

Single elbow

● RG-L2-M5

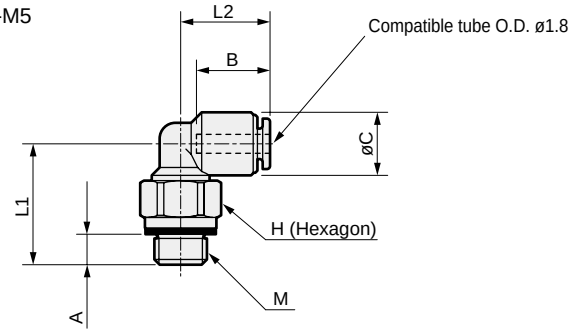

● RG-L2-6

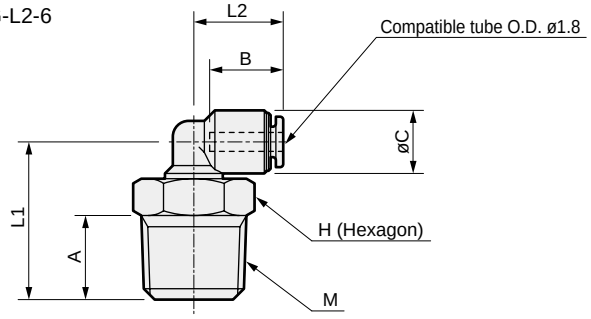

Model No.	M	H	L1	L2	A	B	C	Min. bore size	Eff. X-sectional area mm²	Weight g
RG-L2-M5	M5×0.8	7	11.5	8.5	2.9	7	6	1.5	0.54	2
RG-L2-6	R1/8	10	15	8.5	8	7	6	1.5	0.54	5.8

Blanking plug

● RG-P2-B

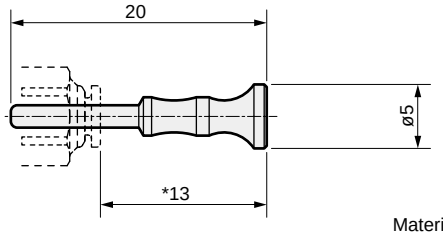

Material: PBT/light gray (CKD standard color) (UL94 standard V-0 or equivalent)
* Dimensions for RG Series fitting.
Weight: 0.2g

⚠ Safety precautions

⚠ CAUTION

■ Use flame-resistant fiber tube (UP-9102-SR) with a flame-resistant push-in fitting for fiber tubing (RG Series).

■ Do not use in an atmosphere with possible contact with welding sparks, etc.
This product is made of flame-resistant resin, but is not resistant to spatter.

■ The tube is soft and thin and could be dislocated if too much force is applied.

MEMO

UP.F.U.NU.KX.SR2 Tube

O.D. 1.8/3.2/4/6/8/10/12/15 mm

● Tubes can be selected according to applications
A great variety of tubes are available according to the purpose and applications. Furthermore, they are highly reliable, meeting needs of space saving and complex piping, etc.

■ Antistatic tube



O.D. x I.D. (mm)
3.2x1.8
4x2.5
6x4
8x5
10x6.5
12x8

·Refer to page: 903

■ Soft nylon tube

Manufacturer of colors other than white: Aoi Co., Ltd.



O.D. x I.D. (mm)
3.2x2.0
3.2x2.4
4x2.5
6x4
8x6
10x7.5
12x9
15x11.5
16x12

·Refer to page: 906

■ New urethane tube



O.D. x I.D. (mm)
4x2.5
6x4.5
8x6
10x7.5
12x9

·Refer to page: 907

■ Urethane tube

Aoi Co., Ltd.



O.D. x I.D. (mm)
3.2x1.8
4x2
6x4
8x5
10x6.5
12x8

·Refer to page: 908

■ Coiling tube

Aoi Co., Ltd.



O.D. x I.D. (mm)
6x4
8x6
10x7.5
12x9.2

·Refer to page: 908

■ Flame-resistant tube

Aoi Co., Ltd.



O.D. x I.D. (mm)
4x2
6x3.8
8x5.5
10x7
12x8.5

·Refer to page: 909

■ Tube cutter

Aoi Co., Ltd.



Tube cutter

Aoi Co., Ltd.
AZ-1200

Features
(1) Sharp cutting edge for right-angle cut prevents air trouble.
(2) Extremely lightweight and compact.
(3) Easy blade replacement.

Applicable material
● Nylon tube
● Urethane tube
● PTFE tube
● Other plastic tubes

Sharp edge





Antistatic tube

● O.D.: 3.2 mm, 4 mm, 6 mm, 8 mm, 10 mm, 12 mm

RoHS

Features

● Resistant to static electricity and dust build-up

● Variety of colors
Tubing is available in black, white, transparent, transparent blue, or transparent green. Applications can be distinguished by color.

● Standard clean-room specifications (F2 Series)

● Diverse lineup
・6 diameters are available: ø3.2, ø4, ø6, ø8, ø10, ø12.

UP-F2 Series (ø3.2 to ø6)

Specifications

Item	UP-91**-F2-P80		
O.D. x I.D. mm x mm	ø3.2 x ø1.8 (Note)	ø4 x ø2.5	ø6 x ø4
Working fluid	Compressed air		
Max. working pressure MPa	0.7(20°C)		
Ambient temperature °C	0 to 60 (no freezing)		
Durometer hardness (JIS K 7215)	HDA94 (reference)		
Min. bending radius (JIS B 8381) mm	4	6	12
Min. installation radius mm	8	11	18
Burst pressure MPa	2.1(20°C)		
Volume resistance ratio (JIS K 6911) Ω·cm	Black: 10^4 to 10^5, other colors: 10^{10} to 10^{11} (Reference value)		
Material	Antistatic urethane		
Color	Black, white, transparent, transparent blue, transparent green, transparent red (Note)		

Ambient temperature and pressure (use/burst)

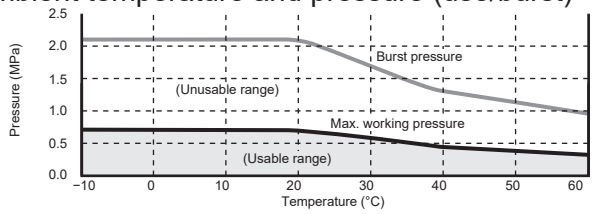

How to order

UP - 91 32 - 20 - W - F2 - P80

Antistatic — Clean-room specifications

Ⓐ Tube hardness
Ⓑ Tube size
Ⓒ Length per roll
Ⓓ Tube color

Code	Description
Ⓐ Tube hardness	
91	94°
Ⓑ Tube size	
32	ø3.2 (Note)
04	ø4
06	ø6
Ⓒ Length per roll	
20	20 m
Ⓓ Tube color	
Blank	Black
W	White
C	Transparent
CB	Transparent blue
CG	Transparent green
CR	Transparent red (Note)

Note: All outer diameter tubes of ø3.2 and the clear red tubes of ø4 and ø6 are available as made to order.

UP-F1 Series (ø8 to ø12)

Specifications

Item	UP-92**-F1		
O.D. x I.D. mm x mm	ø8 x ø5	ø10 x ø6.5	ø12 x ø8
Working fluid	Compressed air		
Max. working pressure MPa	0.7 (20°C)		
Ambient temperature °C	0 to 60 (no freezing)		
Durometer hardness (JIS K 7215)	HDA92 (reference)		
Min. bending radius (JIS B 8381) m	10	13	16.5
Min. mounting radius mm	25	30	36
Burst pressure MPa	2.1(20°C)		
Volume resistance ratio (JIS K 6911) Ω·cm	Black: 10^4 to 10^8, other colors: 10^8 to 10^{12} (Reference value)		
Material	Antistatic urethane		
Color	Black, white, transparent, transparent blue, transparent green		

Ambient temperature and pressure (use/burst)

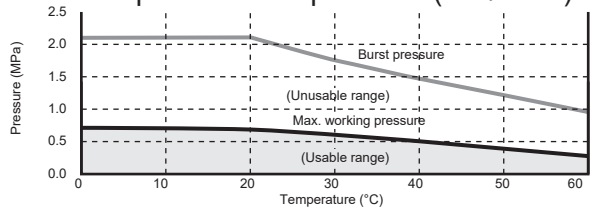

How to order

UP - 92 08 - 20 - W - F1

Antistatic

Ⓐ Tube hardness
Ⓑ Tube size
Ⓒ Length per roll
Ⓓ Tube color

Code	Description
Ⓐ Tube hardness	
92	92°
Ⓑ Tube size	
08	ø8
10	ø10
12	ø12
Ⓒ Length per roll	
20	20 m
Ⓓ Tube color	
Blank	Black
W	White
C	Transparent
CB	Transparent blue
CG	Transparent green

Clean-room specifications (Catalog No. CB-033SA)

● Anti-dust generation structure for use in cleanrooms

UP- 92 -F1-P80**

Antistatic tube

Insert ring (Custom-made product)

How to order

●Insert ring

INS - UP 32 - 1

❶ Compatible tube

❶ Compatible tube

Code	Description
32	For UP-9132
04	For UP-9104
06	For UP-9106

Note: Sales unit is 10 pcs./bag.

Dimensions

● Insert ring [Custom-made product]

・INS-UP32-1

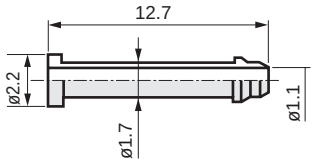

・INS-UP04-1

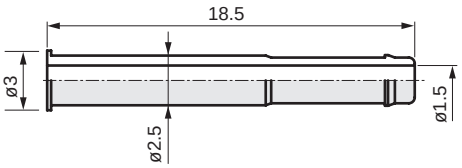

・INS-UP06-1

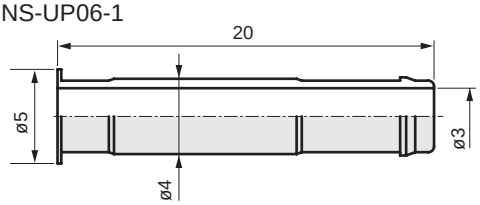

Material: brass + electroless nickeling

Safety precautions

CAUTION

Design/selection

- Be sure to ground the member connected to the fitting. Electrostatic discharge could build up in tubing if the part is not grounded.
- When using tubing where antistatic performance is essential, select “black” tubing.
- Use the same size of urethane tube, push-in fitting and insert ring.
- When using with vacuum pressure with a push-in fitting, use the insert ring.
- Use CKD brand fittings and tubes.
- Do not apply a pull-out force exceeding the values given on the right onto the fitting or tube.

(N)

Tube O.D.	Pull-out force
ø3.2	30
ø4	30
ø6	55
ø8	110
ø10	150
ø12	180

Mounting, installation and adjustment

- The insert ring can be pulled out of the urethane tube by hand when remodeling or restructuring the piping connections. Therefore the insert ring need not be discarded.

Use/maintenance

- Insert the insert ring by hand. If inserted with a tool, it could deform or break and cause vacuum leakage.
- Mounting method

1. Insert the insert ring into the urethane tube with a finger.

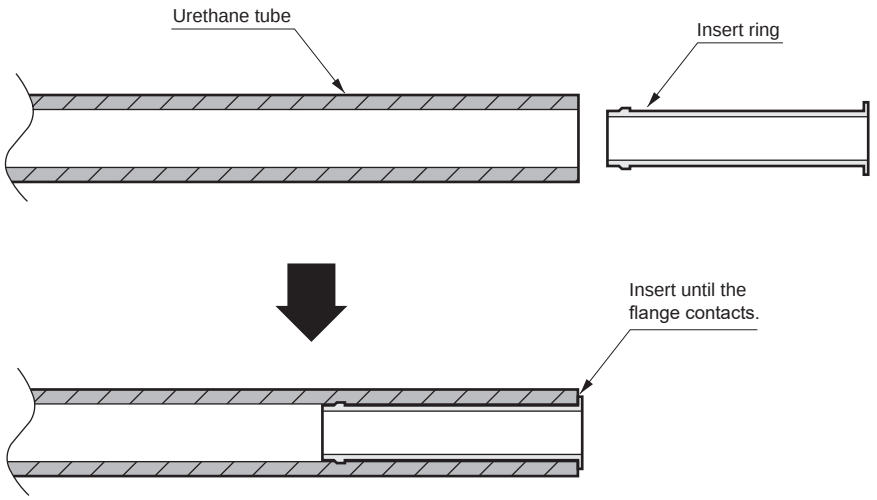

2. Insert into the push-in fitting (GW Series).

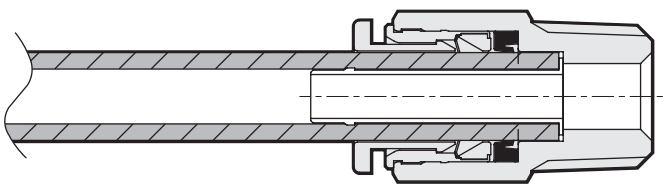



Tube

F.U.NU.KX.SR2 Series

Wide bore size available according to purposes and applications.
Highly reliable piping tubes.
● Outer diameter: 3.2/4/6/8/10/12/15/16 mm

Soft nylon tube

Manufacturer of colors other than white: Aoi Co., Ltd.

The soft nylon tube is very flexible compared to the conventional nylon tubes and optimal for piping in small or complicated spaces. The tube also has sufficient characteristics such as cold resistance, weather resistance, oil resistance and chemical resistance, etc.

How to order

FH-3224 - W

- FH-3224: Size of soft nylon tube ø3.2 x ø2.4
- W: Ⓐ Tube color

Ⓐ Tube color	
Blank	Black
W	White

For miniature fitting (F) (page 816)

F-15 04 - 20 - W

- F-15: Soft nylon tube
- 04: Ⓐ Tube size (O.D.)
- 20: Ⓑ Length/roll
- W: Ⓒ Tube color

Ⓐ Tube size (O.D.)				Ⓑ Length/roll		Ⓒ Tube color	
32	ø3.2	10	ø10	20	20 m	Blank	Black (standard)
04	ø4	12	ø12	100	100 m	W	White (standard)
06	ø6	15	ø15			R	Red
08	ø8	16	ø16			BU	Blue
						Y	Yellow
						G	Green
						O	Orange

Note: If tube color is white "W", length per roll 100 m is not available.

Note: Use the FH-3224 for miniature fitting. F-1532 cannot be used.

Note: If the ❶tube size is "16" and ❸ tube color is "white", the model No. will be "F-1516-* *-N".

Specifications

This table indicates the value at 20°C.

Item	FH-3224	F-1532	F-1504	F-1506	F-1508	F-1510	F-1512	F-1515	F-1516
Working fluid	Compressed air								
O.D. x I.D. mmxmm	3.2x2.4	3.2x2.0	4x2.5	6x4	8x6	10x7.5	12x9	15x11.5	16x12
Ambient temperature °C	-10 (14°F) to 60 (140°F) (no freezing)								
Burst pressure MPa	5.39 (≈780 psi, 53.9 bar)		4.9		3.9	3.43 (≈500 psi)		2.94	3.3
Max. working pressure MPa	1.76 (≈260 psi, 17.6 bar)		1.67		1.27	1.18 (≈170 psi)		1	1.1
Durometer hardness	HDD 63	HDD 52							
Min. bend rad (JIS B 8381) mm	13	4.5	5	8	15	20	26	43	46
Min. installation radius mm	21	7	10	20	30	40	55	80	90
Tube color	Black/White		White (aonly 20 m)/black/ red/blue/yellow/green/orange			Black/White			Black/ White *1
Standard length per roll m	20		20/100			20/100 (only black)			20/100

* Outer diameter dimension tolerance may vary within ±0.1 mm.
*1: Manufacturer of both white and black: Aoi Co., Ltd.

Relation of ambient temperature and max. working pressure

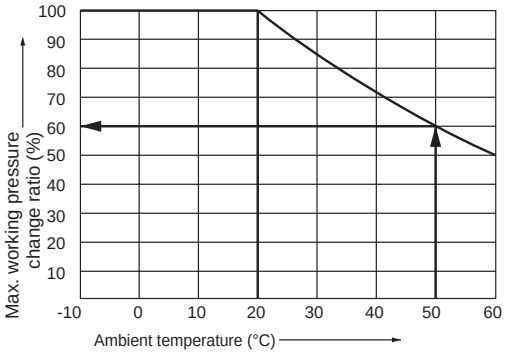

(Example) Tube F-1504 (ø4 x ø2.5)
If ambient temperature is 50˚C, max. working pressure is 60% of max. working pressure of 20˚C.

$1.76 \times \frac{60}{100} \approx 1.06$(MPa)

New urethane tube

RoHS

Due to the adoption of a new manufacturing process, larger inner diameter and increased strength are realized simultaneously with the same outer diameter. This piping tube is also used for larger flow rates. Also economical.

Common specifications

Descriptions	Description
Working fluid	Air
CircumferenceTemperature °C	0 to 60
Burst pressure MPa	4 (at 20°C)
Max.Working pressure MPa	1.0 (at 20°C)
Working vacuum pressure kPa	−100

Specifications

Descriptions	NU-04	NU-06	NU-08	NU-10	NU-12
O.D. x I.D. mm x mm	4 x 2.5	6 x 4.5	8 x 6	10 x 7.5	12 x 9
Burst pressure MPa	4 to 2.4				
Ambient temperature °C	0 to 60 (no freezing)				
Durometer hardness (JIS K7215)	HDD 64				
Min. bending radius (JIS B 8381) mm	8	16	24	30	36
Min. installation radius mm	12	26	36	42	52
Outer diameter accuracy mm	0			+0.1 -0.15	
Weight g/m	10	15	28	42	62
Tube color	Black/white				
Standard length per roll m	20/100 (only black)				

Note: Refer to Intro Page 59 for relation of the tube length to the effective cross-sectional area.

How to order

NU - 04 - 20 - W

A Tube size (O.D.)		B Length/roll		C Tube color	
04	ø4	20	20m	Blank	Black (standard)
06	ø6	100	100m	w	White (standard)
08	ø8				
10	ø10				
12	ø12				

Note: "W" Length per roll 100m is not available for white.

Relation of ambient temperature and pressure (use/burst)

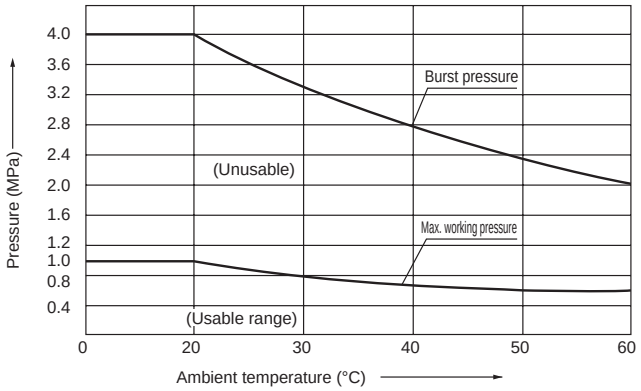

Clean-room specifications

(Catalog No. CB-033SA)

● Anti-dust generation structure for use in cleanrooms

NU ····· P80

Soft urethane tube

Aoi Co., Ltd.

How to order

U-92 - 06 - 20 - N

Soft urethane Tube

A Tube O.D. size		B Length/roll		C Tube color	
04	ø4	20	20m	Blank	Black
06	ø6	100	100m	N	Transparent
08	ø8			PW	Pure white
10	ø10			R	Red
12	ø12			BU	Blue
				Y	Yellow
				G	Green
				O	Orange

Specifications

This table indicates the value at 20°C.

Descriptions	U-9204	U-9206	U-9208	U-9210	U-9212
Working fluid	Compressed air				
O.D. x I.D. mm x mm	4 x 2	6 x 3.7	8 x 5	10 x 6.5	12 x 8
Burst pressure MPa	4.1	2.9	2.8	2.6	2.6
Max. working pressure MPa	1.3	0.9	0.9	0.8	0.8
Durometer hardness JIS K 7215	HDA 92				
Min. bending radius mm	4	10	11	13	16.5
Min. mounting radius mm	8	17	25	30	36
Tube color	Black/transparent/red/blue/yellow/green/orange/pure white				
Standard length per roll m	20/100				

Relation of ambient temperature and max. working pressure

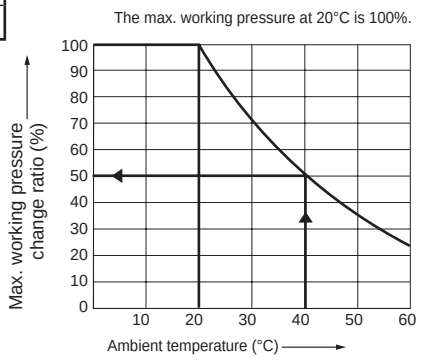

When the temperature rises, the constant pressure gradually drops. Special consideration must be given for the ambient temperature.
(Example) In U-9208, the max. working pressure at an ambient temperature of 40°C is 50% of that at 20°C.it will be .

$0.9\times \frac{50}{100} \approx 0.45(\text{MPa})$

Clean-room specifications

(Catalog No. CB-033SA)

U-92 ····· P80

Urethane tube

Aoi Co., Ltd.

Since urethane tube has high mechanical strength, the tube strongly endures external force and also has flexibility. This is widely used in general pneumatic lines, etc.

How to order

U-95 04 - 20 - N

Urethane tube

A Tube O.D. size		B Length per roll		C Tube color	
32	ø3.2	20	20 m	Blank	Black
04	ø4	100	100 m	N	Clear
06	ø6				
08	ø8				
10	ø10				
12	ø12				

Note: Indicate tube color in the remarks on the order slip.

Clean-room specifications (Catalog No. CB-033SA)

U-95 .....- P80

Specifications

1 MPa = 10 bar
This table indicates the value at 20°C.

Item	U-9532	U-9504	U-9506	U-9508	U-9510	U-9512
Working fluid	Compressed air					
O.D. x I.D. mmxmm	3.2x1.8	4x2	6x4	8x5	10x6.5	12x8
Ambient temperature °C	0 (32°F) to 60 (140°F) (no freezing)					
Burst pressure MPa	6.1 (≈880 psi)	5.2 (≈750 psi)	3.2 (≈460 psi)	3.6 (≈520 psi)	3.4 (≈490 psi)	3.2 (≈460 psi)
Max. working pressure MPa	1.5 (≈220 psi)	1.7 (≈250 psi)	1.0 (≈150 psi)	1.2 (≈170 psi)	1.1 (≈160 psi)	1.0 (≈150 psi)
Durometer hardness JIS K 7215	HDA 97					
Min. bend rad (JIS B 8381) mm	4	5	13	14	16	20
Min. installation radius mm	7	10	20	30	40	50
Tube color	Transparent/black					
Standard length per roll m	20	20/100			20	

* The O.D. tolerance of U-9506 and smaller model No. is $^{+0.1}_{-0.15}$ mm, and that of U-9508 and larger model No. is $^{+0.1}_{-0.2}$ mm.

Relation of ambient temperature and max. working pressure

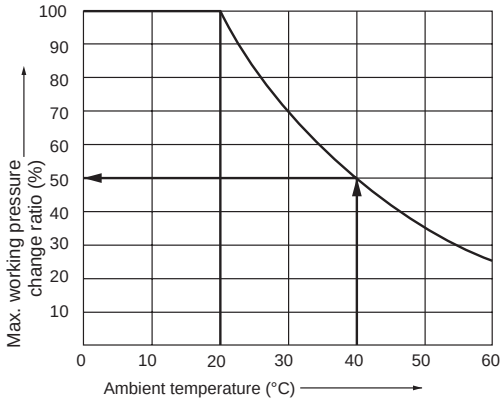

When the temperature rises, the constant pressure gradually drops. Special consideration must be given for the ambient temperature.
(Example) In U-9506, the max. working pressure at an ambient temperature of 40°C is 50% of that at 20°C.

$1.0\text{x}\ \frac{50}{100} \approx 0.5\text{(MPa)}$

Coiling tube

Aoi Co., Ltd.

A coiling tube is a coil-like manufactured extensible tube. Unlike conventional products, fittings are easily installed and the coil contracts and expands very smoothly due to the straight section provided with the specified length in the direction of expansion and contraction. Durability of coil end is also excellent.

How to order

KX-12 06

Coiling tube

A O.D. size	
06	ø6
08	ø8
10	ø10
12	ø12

Specifications

Item	KX-1206	KX-1208	KX-1210	KX-1212
O.D. x I.D. mmxmm	6x4	8x6	10x7.5	12x9.2
Ambient temperature °C	-10 (14°F) to 60 (140°F) (no freezing)			
Working extension m	2.5			
D mm	50	70		90
L mm	250	240	290	275
ℓ	100			
Tube color	Orange			

* The O.D. tolerance is $^{+0.07}_{-0.1}$ mm.
* Tube is made of hard nylon.

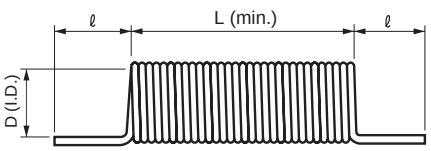

Flame-resistant tube

Aoi Co., Ltd.

Single-core flame-resistant tube using flame-resistant materials. Even if welding sparks, etc., come into contact, the tube will not continue to burn.
(UL standard 94V-0 or equivalent: self-extinguishing property)

Specifications

1 MPa ≈ 145.0 psi, 1 MPa = 10 bar

Item	SR2-4 x 2	SR2-6 x 3.8	SR2-8 x 5.5	SR2-10 x 7	SR2-12 x 8.5
O.D. x I.D. mm x mm	4 x 2	6 x 3.8	8 x 5.5	10 x 7	12 x 8.5
Ambient temperature °C	0 (32°F) to 60 (140°F) (no freezing)				
Burst pressure MPa	4.8 (≈696 psi, 48 bar)	4.3 (≈623 psi, 43 bar)	3.4 (≈493 psi, 34 bar)	3.3 (≈478 psi, 33 bar)	3.3 (≈478 psi, 33 bar)
Max. working pressure MPa	1.6 (≈232 psi, 16 bar)	1.4 (≈203 psi, 14 bar)	1.1 (≈159 psi, 11 bar)	1.1 (≈159 psi, 11 bar)	1.1 (≈159 psi, 11 bar)
Min. bending radius mm	8	14	24	32	35
Tube color	Black/red/blue/green				
Standard length per roll m	20 / 100				

This table indicates the value at 23°C.

How to order

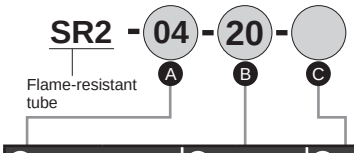

A Compatible tube O.D. size		B Length per roll		C Tube color	
4 x 2	ø4	20	20 m	Blank	Black
6 x 3.8	ø6	100	100 m	R	Red
8 x 5.5	ø8			BU	Blue
10 x 7	ø10			G	Green
12 x 8.5	ø12				

Note: Indicate tube color in the remarks on the order slip.

Max. working pressure change ratio by working and ambient temperature

Working and ambient temperature	23°C or less	30°C	40°C	60°C	80°C	100°C	120°C
Change ratio	100%	80%	70%	55%	35%	20%	10%

Ex.) Max. working pressure at 60°C for SR2-8 x 5.5
1.1 MPa (max. working pressure at conditions below 23°C) x 55% (change ratio for 60°C) = 0.6 MPa

Pneumatic components (fitting/tube)

Safety Precautions

Be sure to read this section before use.
Refer to Intro Page 63 for general precautions regarding pneumatic components and refer to "⚠Safety precautions" for detailed precautions for individual series.

Design/selection

⚠WARNING

■ Use the product within specifications.
Use with fluid other than compressed air or at a pressure or temperature exceeding the specifications could result in rupture, the tube coming off, or leakage.

■ Avoid installing this product outdoors or where it is exposed to direct sunlight.

■ Do not use the normal fitting if electrostatic discharge could build up. Otherwise system faults or failure could occur. Antistatic fitting and tubing should be used in locations such as this.

■ Do not constantly push down or apply a load onto the push ring for the push-in fitting.
- The tube may lose its holding capacity.
- When transporting an assembled product, avoid positions where the push ring is constantly pressed down.

⚠CAUTION

■ Confirm before use that the product will withstand the working environment.
- This product cannot be used in environments where functional obstacles could occur.
  Such environments include high temperatures, chemical atmospheres, or where chemical liquids, vibration, moisture, water dripping or gas is present. Environments where ozone is generated. Outdoors or where the product could be subject to direct sunlight; or where coolant or spatter could come in contact or where static electricity could pose a problem.

■ Confirm whether PTFE can be used.
- The sealant contains PTFE (tetrafluoroethylene resin) powder. Check that this poses no problems during use.

■ Consult with CKD if ozone is generated in the supplied air. (Ozone-proof products are available.)

■ Avoid using this product in hot or humid environments, or where it could be subject to direct sunlight. Install this product where the temperature is 40˚C or less.

■ Flame-resistant resin (equivalent to UL94 Standard V-0) is provided for GW Series body push ring, but not for the GWJ Series. Check specifications when selecting the product.

ZSP Series

■ Chemical resistance is SUS440 or equivalent. This product cannot be used when a higher chemical resistance is required.

■ Be sure to contact CKD when using in a corrosive atmosphere. The fitting body could be damaged under some conditions.

Mounting, installation and adjustment

⚠WARNING

■ Securely insert the tube until it contacts the fitting tube end, and check that it does not come off the fitting.

■ Stop air flow and confirm that there is no residual pressure before replacing the tube.

Piping

⚠CAUTION

■ Observe the following precautions when using nylon tubes or urethane tubes for piping material.
- Use the designated tube and CKD plastic plug (GWP Series). Do not use a metal plug as doing so may cause problems.
  Tube outer diameter accuracy
  · Polyamide tube.....Within ±0.1 mm
  · Polyurethane tube (to ø6).....Within ±0.1 mm
  (ø8 up).....Within $^{+0.1}_{-0.15}$ mm
  Use a tube with hardness of 92˚ or more. If a tube that does not satisfy the diameter accuracy or hardness is used, the chucking force may decrease, the tube may come off or be difficult to insert.
  Consult with CKD when using a non-designated tube or plug.
- Use flame-resistant tubes or metal steel pipes in an environment where spattering may occur.
- When using the standard push-in fitting on the spiral tube, fix the base of the tube with a hose clamp. Rotation may occur, causing a reduction in holding force.
- Cut the tube with a dedicated cutter and always at a right angle.
- Use the tubing so that it does not become worn or damaged. Tubing could collapse or rupture.
- A used tube could be deteriorated or deformed and so always use a new tube.
- Do not let the tube directly contact other surfaces, as there is a risk of wear or damage.

■ Do not use this product for applications involving constant rotation or oscillations, or in which tubes move violently.
- The elbow can be mounted by turning, but must not be used for constant rotating or oscillating applications. Fittings could be damaged.
- Provide sufficient allowance in the tube so that it does not bend sharply.

■ Use the tubing so that it is within the min. mounting radius and long enough to avoid sharp bends.
- Consider changes in tubing length caused by pressure when tubing is connected, and provide sufficient length within the minimum tube bending radius.
- Measuring method
  (1) Min. bending radius (JIS B 8381)
  Values are based on JIS B 8381.
  If tube is tightly wound around a round rod, indicate the rod radius when variation reaches 25%.

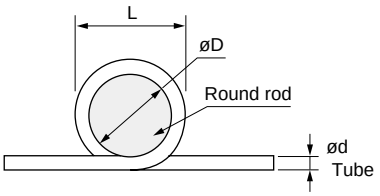

$$\eta = \left(1 - \frac{L-D}{2d}\right) \times 100$$

η: Deformation ratio (%)
d: Tube O.D. (mm)
L: Measuring volume (mm)
D: Round rod diameter (mm) (Twice the min. bending radius)

(2) Min. installation radius
To measure, simply bend the tube and confirm the radius when tube diameter deformation is 10%.

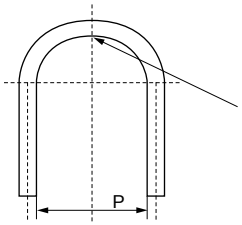

Minimum mounting pitch P when deformation rate is 10%.
Min. installation radius = P/2

■ Always flush just before piping pneumatic components.
- Any foreign matter that has entered during piping must not enter the pneumatic components. Remove all swarf and foreign debris generated during piping and tube insertion before use.

■ When supplying compressed air after connecting pipes, do not suddenly apply high pressure.
- The pipe connection could dislocate, causing the pipe to fly off, leading to accidents.

■ After connecting piping, check pipe connections for air leaks before supplying compressed air.
- Apply a leakage detection agent on pipe connections with a brush, and check for air leaks.

■ Tighten pipes with the appropriate torque.
- The purpose is to prevent air leakage and damage to bolts. First tighten the bolts by hand to ensure that threads are not damaged, then use a tool.
  Check that the tool's hexagon face and wrench are the correct size.

[Reference value]

Port thread	Tightening torque N·m
M3	0.3 to 0.6
M5	1.0 to 1.5
Rc1/8	3 to 5
Rc1/4	6 to 8
Rc3/8	13 to 15
Rc1/2	16 to 18

* The above values apply when partner threads are JIS B 0203 piping tapered female threads (material C3604BD).

■ Connect piping so that connections are not dislocated by equipment movement, vibration, tension, etc.
- Control of actuator speed will be disabled if piping on the exhaust side of the pneumatic circuit is disengaged.
- When using the chuck holding mechanism, the chuck may be released, creating a hazardous state.
- Confirm that the tube has been inserted properly, and make sure that there is no tension during use.
  The tube could be dislocated or damaged if there is any tension.

■ Make sure that there is no torsion, tension or moment load applied to the fitting or the tube.

■ Do not tighten while pressure is applied.

■ Observe the following precautions when using nylon tubes or urethane tubes for piping material.
- Use flame-resistant tubes or metal steel pipes in an environment where spattering may occur.
- Use a hydraulic hose when piping is for both hydraulic and pneumatic use.
- Use a spigot fitting for high-temperature fluids. The push-in fitting cannot be used.

■ Check that the tubing is not worn or damaged.
- Tubing could collapse, rupture, or become dislocated.

■ Use the designated tube.

■ Securely insert the tube completely to the end, and make sure that the tube cannot be pulled out.

RJF Series

⚠WARNING

■ Fixing method (fixed side)
Always provide a gap at the connection of the product (fixed side) and baffle to allow a slight shaft deviation. Applying an excessive load to the axis on the rotating side could result in damage or air leakage.

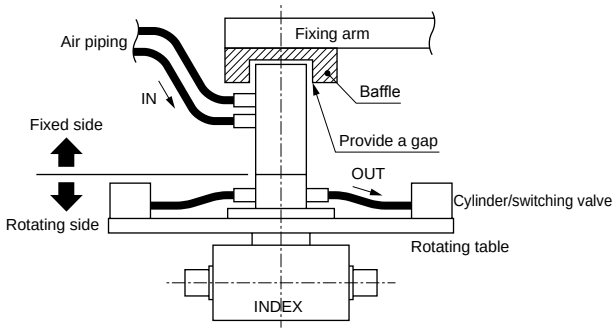

■ Fixing method (rotating side)
When using this product (rotating side) in a place with a particularly high movement frequency, always use an accurate tightening method. If the product's moving sections could pose a risk to humans, devices or systems, provide a structure so that those sections cannot be directly touched.

■ Secure sufficient space for maintenance and inspection.

Safety Precautions

Be sure to read this section before use.
Refer to Intro Page 63 for general precautions regarding pneumatic components and refer to "⚠Safety precautions" for detailed precautions for individual series.

Mounting, installation and adjustment

⚠CAUTION

■ Cut the tube vertically with a dedicated cutter.

■ If the set screw is M3 or M5 port thread, the chamfered outer diameter of the female thread side must be within the following values.

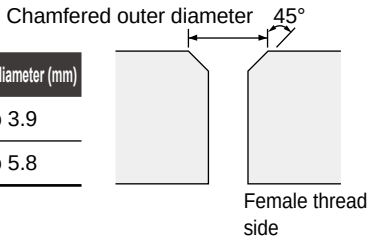

Port thread	Chamfered outer diameter (mm)
M3	ø3.3 to 3.9
M5	ø5.4 to 5.8

■ The effective cross-sectional area of the turn elbow (GWL*-*-T, GWL*-*-2T) varies based on the direction.

ZJ Series

■ Except for separating the main body and nut, do not disassemble or modify fitting components. Otherwise functions cannot be guaranteed.

■ The product body and nuts are made of the same material (SUS316).
When tightening, stop as soon as the body and nut come in contact.
Tightening the tubing too much could cause seizure at the thread part, making it difficult to remove the tube.

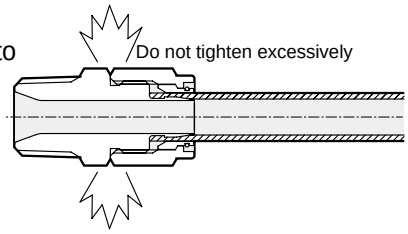

ZSP Series

■ When using a non-CKD tube, make sure that the outer diameter tolerance of the tube satisfies the specifications given in Table 1.

Table 1 Tube outer diameter tolerance

Tube	Outer ø dimension tolerance
Urethane tube	Nominal port size ±0.15
Nylon tube	Nominal port size ±0.1

■ Use the product within the recommended tightening torque range given in Table 2.

Table 2 Recommended tightening torque

Port thread	Tightening torque (N·m)
M5	1.0 to 1.5
R1/8	7 to 9
R1/4	12 to 14
R3/8	22 to 24
R1/2	28 to 30

■ Mounting is possible by rotating in an arbitrary direction, but do not use this product in applications involving constant rotation or oscillation.

Storage

■ Although the fitting is made of highly corrosion-resistant material, rust could spread from elsewhere. Avoid storing this part with products made of other materials, and store in a clean, dry place.

ZJ Series

■ Store the product body with nuts as a set. If parts are stored separately, the body and nut threads or body protrusions (sealants) could be damaged or faults in connection or leaks could occur.

Use/maintenance

⚠CAUTION

Mounting and removal

Mounting

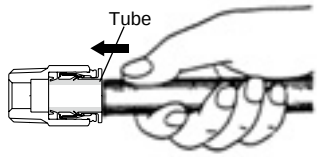

Push the tube in until it contacts the tube end. Check that the tube does not come off the fitting. Tube inserts 15 to 21 mm from the end of the fitting body. The end of the mounted tube must be cut at a right angle.

Removal



While pressing down on the push ring with your fingers, the tube can be removed by pulling on it.

ZJ Series

Mounting

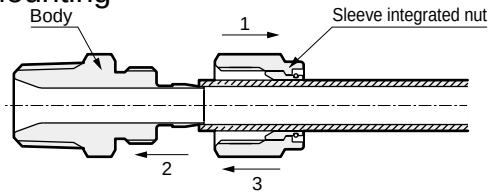

Pass tube through the sleeve integrated with the nut.
Insert tube into the main body, and tighten the sleeve integrated with the nut until it contacts the body.
Stop tightening the sleeve integrated with the nut when the body and nut come in contact.
Tightening the tubing too much could cause seizure at the thread part, making it difficult to remove the tube.

Removal

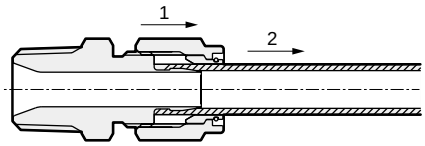

Loosen the sleeve integrated with the nut and pull out tube.
The sleeve integrated with the nut can be reused.

Air blow nozzles

BN*

■ **Pneumatic auxiliary components**



CONTENTS

Product introduction	916
Solution examples	920
● Energy saving (BNE)	924
● Standard (BN)	926
● Blower specification (BNB)	927
⚠ Safety precautions	928



Energy-saving Type (Flat Type)	
Material	Resin (PPS), metal (stainless steel)
Injection type	Straight
Air source	Compressor

We recommend installing the air blow

Energy saving

A special structure which brings in the surrounding air to enhance the pneumatic air source.
Powerfully injects air, even in cases of small air consumption, without reducing the compressor's burden.

With energy-saving type (flat type)
Takes in not only the surrounding air, but also internal air.

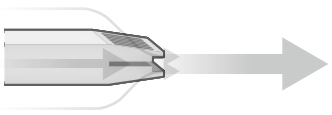

With open pipe

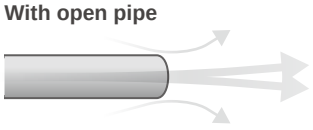

Approximately 45% flow reduction

Uniformity

Employs a special structure that ejects air to the target area more uniformly. Achieves a uniform force along the width of injection by alternating the nozzle holes and air suction holes on the top and bottom. Achieves stable quality of workpieces through highly efficient air blow with little decay in force from distance.



A special structure that uniformly injects air

Low noise

In addition to a work environment-friendly quiet design that reduces turbulence, there are also flat and round types as needed by application.

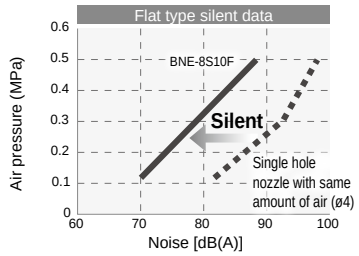

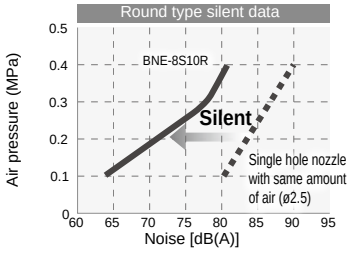



Standard	
Material	Metal (stainless steel)
Injection type	Point
Air source	Compressor

Blower specification	
Material	Metal (stainless steel)
Injection type	Fan type
Air source	Blower



Energy-saving (round)	
Material	Resin (PP), metal (stainless steel)
Injection type	Round
Air source	Compressor

nozzle to save energy with air blowing.

Are you aware of this? Approximately 20% of total plant power consumption is due to compressed air.
Approximately 70% of that air is used for air blow.

Plant power consumption

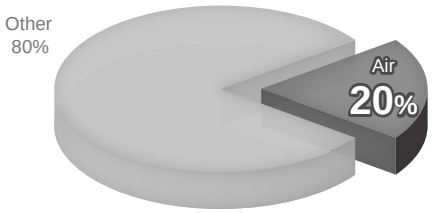

Breakdown of air used

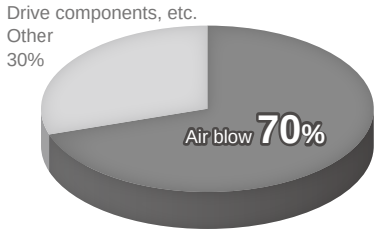

Reduced air blow consumption is essential for plant-wide energy saving.

Effects of installation

Air consumption

	Energy saving (flat) nozzle	Open pipe*1
Air consumption (1 nozzle)	450 ℓ/min (ANR)	900 ℓ/min (ANR)
Annual costs (estimate)	**4,072,000 yen per year**	8,144,000 yen per year

50 nozzles used. For pressure of 0.3 MPa, and operations of 8 hours a day, 20 days a month.
*1. Compared to an open pipe with an equivalent about of injected air.

Reduced by approx.
4 million yen yearly

Noise level

	Energy saving (flat) nozzle	Open pipe*1
Noise (Pressure 0.3 MPa)	**77 dB (A)**	94 dB (A)

Measurement conditions: Background noise: 58 dB (A), injection direction: lateral, injection height: 1 m, measurement point nozzle: forward 1 m
*1. Compared to an open pipe with an equivalent about of injected air.

Reduced by approx.
17 dB (A)

Proposals only CKD can make.

Air blow total solutions.

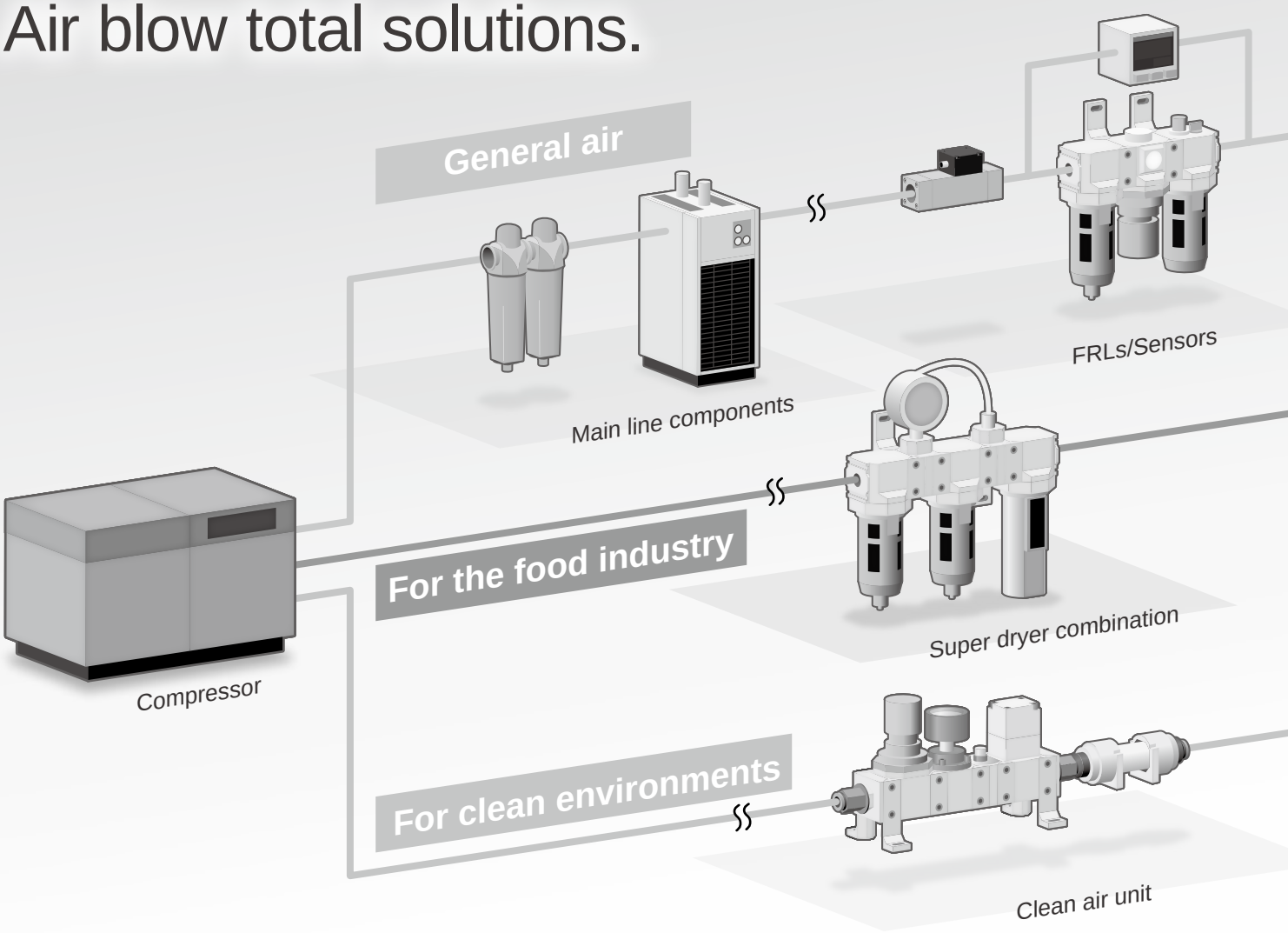

Main line components



Large main line filter
AF3000 Series

Low pressure loss element is used to contribute to energy saving.
Pressure loss is reduced by approx. 1/2 of conventional products.
40 models in 4 series are available to cover a wide range of variations, from 16 to 256 m^3/min (ANR).



Medium main line filter
AF2 Series

Low pressure loss for a long life.
Simple module connections for further space saving.
Differential pressure indicator provided as standard needed to control element service life.



Refrigeration air dryer
GX Series

Thin and compact body.
Low air loss drain discharger adopted.
Achieves low power consumption.



Desiccant air dryer
SHD Series

Purge flow rate is minimized with the energy-saving dew point monitor.
Achieves low noise with the proprietary 2-level exhaust system.

F.R.L./Sensors



Air unit
CXU Series

Each air component can be made into a module, reducing the number of pipes compared to conventional designs.
Piping free, space saving, free combination.

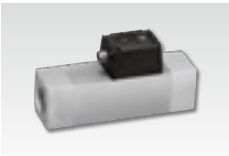

Flow rate sensor
PF Series

Grasp the energy consumption status quo and confirm the effects.
Degree of protection IP64 equivalent.

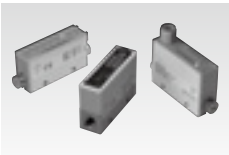

Flow rate sensor
FSM3 Series

Functions which pursue the operability of the compact flow rate sensor.
Compact even with large flow rate to downsize and lighten your equipment.
Lineup of integrated and separated display models.



Pressure switch
PPX Series

Air pressure is electrically detected, displayed and output.
Digital display increases visibility

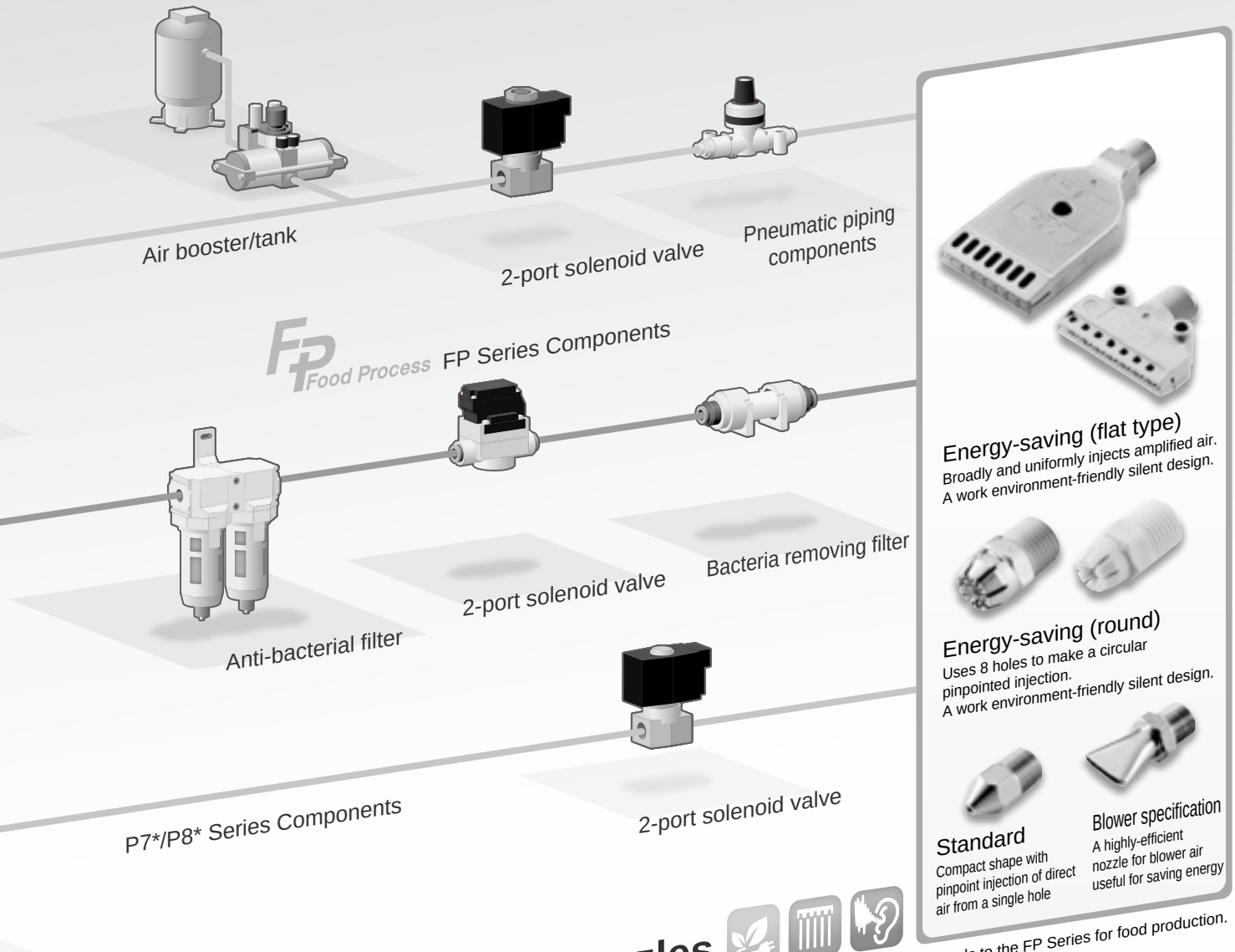

Energy-saving (flat type)
Broadly and uniformly injects amplified air.
A work environment-friendly silent design.

Energy-saving (round)
Uses 8 holes to make a circular pinpointed injection.
A work environment-friendly silent design.

Standard
Compact shape with pinpoint injection of direct air from a single hole

Blower specification
A highly-efficient nozzle for blower air useful for saving energy

*Corresponds to the FP Series for food production.

Air blow nozzles

Fluid control valves



Pilot operated 2-port solenoid valve for compressed air
EXA Series
Large flow rate (over 450 L/min*) and low power consumption (0.6 W) contribute to energy saving.
*ø6 fitting Primary pressure: 0.5 MPa
Secondary pressure: Potential value of atmospheric release

Anti-bacterial/bacteria-removing filter

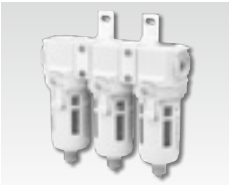

Anti-bacterial/bacteria-removing filter
SFC-FP2 Series
- Bactericidal activity value 3.
- Bacteria trapping performance LRV8 or more.
- Inline type bacteria removing filter also available.

Pneumatic piping components



Needle valve with adjusting dial
DVL Series
Value (needle position) is displayed with a dial so that anyone can easily adjust the flow rate.
Linear flow characteristics in proportion to dial value (needle position).



Inline filter
FSL Series
Compact, lightweight and space saving inline filter.
Use either positive or negative pressure.

FP Series

FP Food Process

An extensive lineup of everything from air filters to actuators allows for secure and safe use in food processing.
FP1 Series: Food-grade (NSF H1) lubricant is used for flow paths and sliding parts.
FP2 Series: In addition to FP1, this series' flow paths use resin and rubber materials compliant with the Food Sanitation Act.

: Energy saving : Uniformity : Low noise
: Long service life : Space saving

Solution examples

Cleaning through blowing off adhered foodstuffs

Application: Cleaning
Industry: Foodstuffs
Product: Flat nozzle

Various FR components FP Series



Diaphragm cylinder valve



Air nozzle flat type



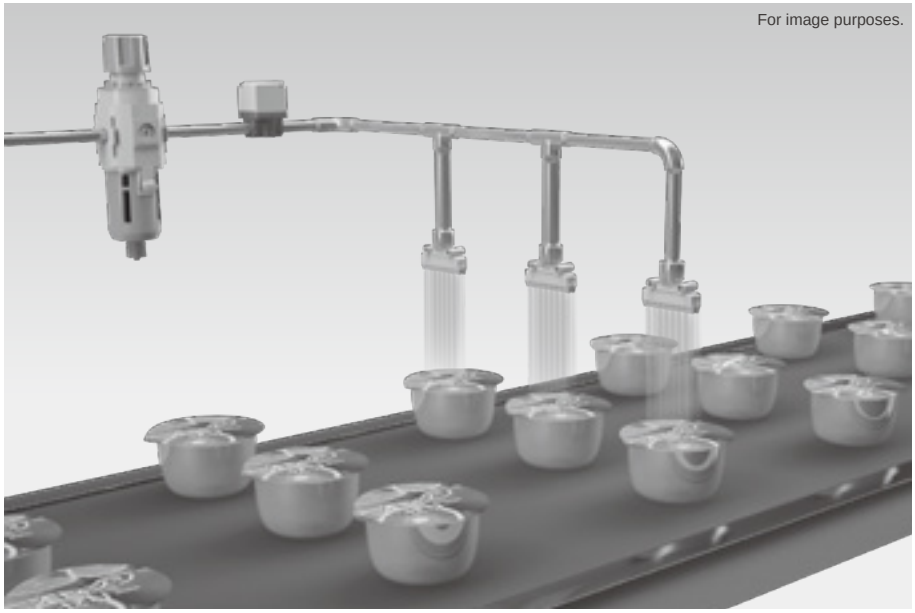

For image purposes.

Effect

Injects air more powerfully and more uniformly, while reducing air consumption.
FP Series available, allowing for secure and safe use in food processing.
Food-grade (NSF H1) lubricant is used for flow paths and sliding parts.

Cleaning food workpieces through direct blowing

Applications: Cleaning
Industry: Foodstuffs
Product: Flat nozzle
(stainless steel)

2-port solenoid valve



Anti-bacterial/bacteria-removing filter



Air nozzle flat type





For image purposes.

Effect

Corresponds with the Food Sanitation Act by combining with anti-bacterial or bacteria removing filters.
The nozzle is made of stainless steel that is heat-resistant, chemical-resistant, and impact-resistant.
FP Series available, allowing for secure and safe use in food processing.

*When directly blowing food, contact CKD.

AIR BLOW NOZZLE BN_ SERIES

Blowing away bad workpieces

Applications: Transportation/ sorting
Industry: Foodstuffs
Product: Flat nozzle

2-port solenoid valve



Bacteria removing filter/inline



Air nozzle flat type



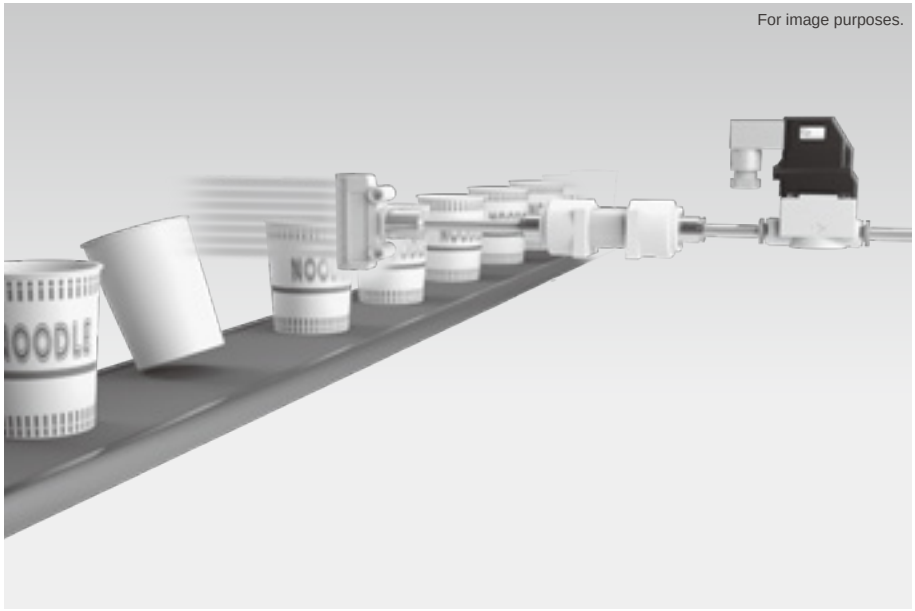

For image purposes.

Effect

Transports workpieces faithfully with high efficiency and strong impact force.

Use for high-speed sorting and transportation

Applications: Transportation/ sorting
Industry: Machine parts
Product: Single hole nozzle

Direct acting solenoid valve



Flow rate sensor



Needle valve with adjusting dial



General air nozzle (point)



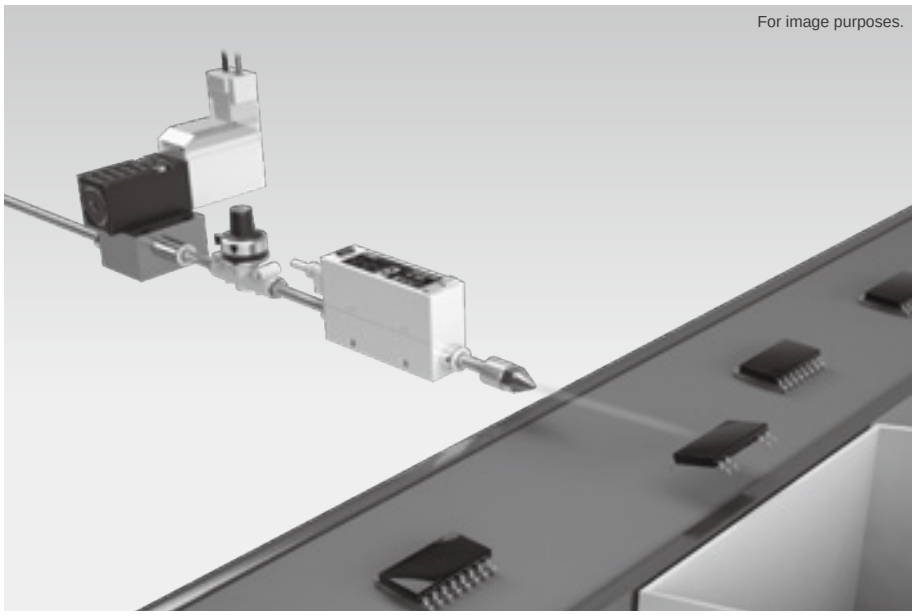

For image purposes.

Effect

High reactive solenoid valves that support fast tact sorting, such as in chip production or parts feeders.

Solution examples

Draining by blowing workpieces

Applications: Draining
Industry: Automobiles
Product: Round nozzle
(stainless steel)

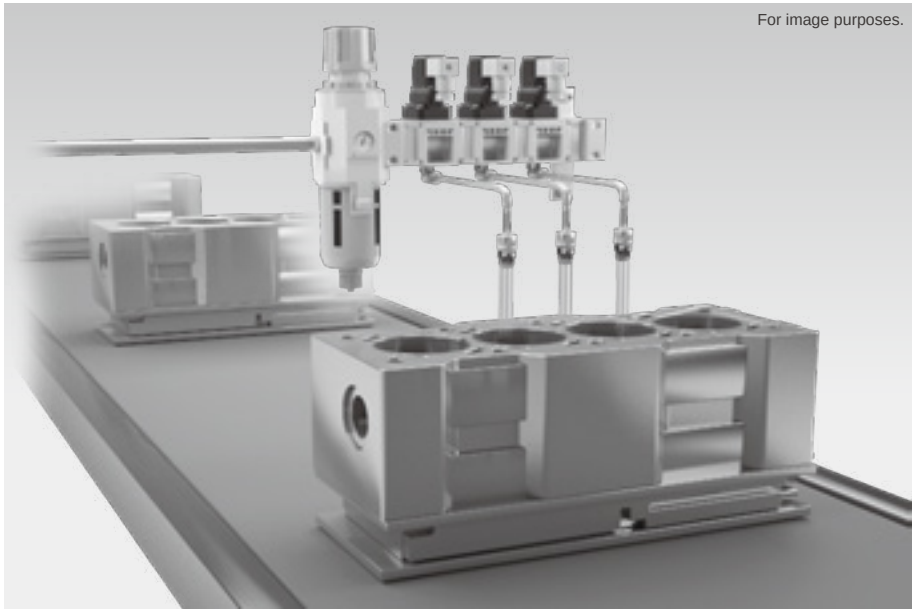
For image purposes.

Air unit with blow valve

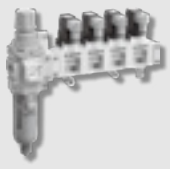

Air nozzle round type



Effect

Localized powerful air blow made possible with a round type nozzle.
Has high effect on air blow of complicated workpieces.
Made of highly heat-resistant stainless steel.

Blowing away chips that are clinging to workpieces and cooling the processing jig.

Applications: Cleaning/cooling
Industry: Machine parts
Product: Single hole nozzle

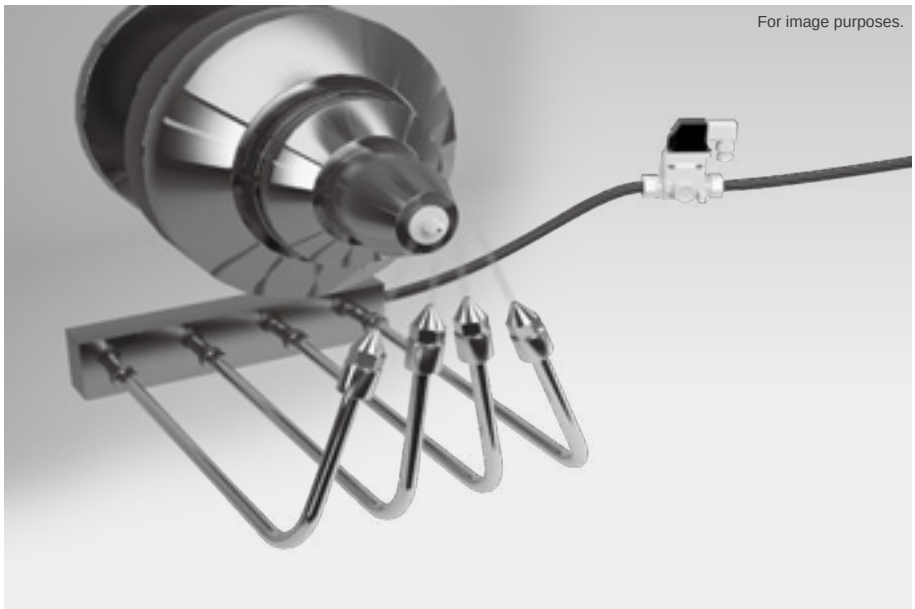
For image purposes.

Blow solenoid valve



General air nozzle (point)



Effect

Pinpoints injection of direct air from a single hole.
Compact and ideal for mounting in high-density areas.
Has excellent cost performance.

AIR BLOW NOZZLE BN_ SERIES

Prevents multiple transportation due to peeling of thin workpieces

Applications: Peeling
Industry: General industrial machinery
Product: Flat nozzle

Blow solenoid valve



Pressure sensor



Inline filter



Air nozzle flat type



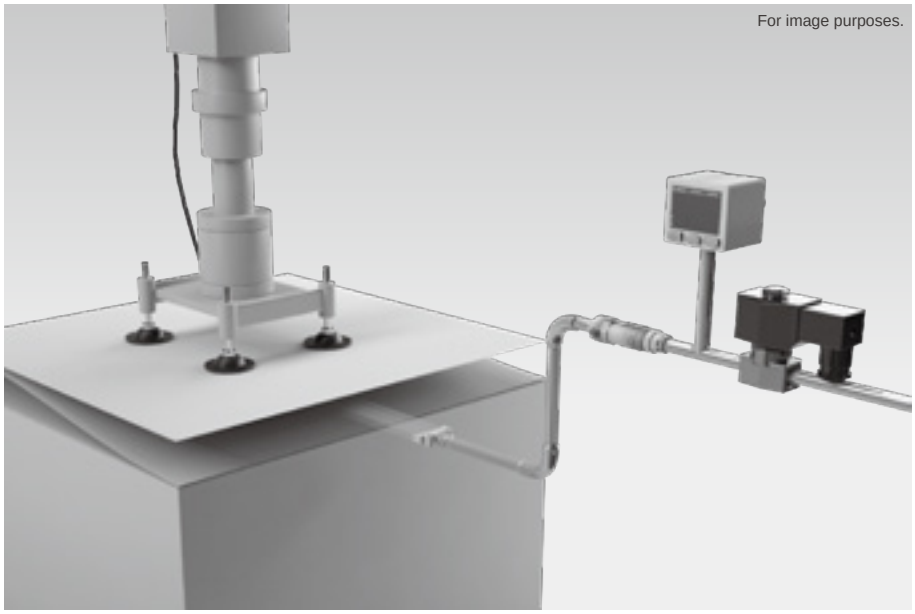

For image purposes.

Effect

Prevents repetitive transport of workpieces with a flat type air nozzle that blows uniformly into a wide range of spaces.
Can also be used to prevent repetitive suction of thin oily boards.

Electronic circuit board surface cleaning

Application: Cleaning
Industry: Electronic parts
Product: Flat nozzle (PPS)

Blow solenoid valve



Needle valve



Clean filter



Air nozzle flat type



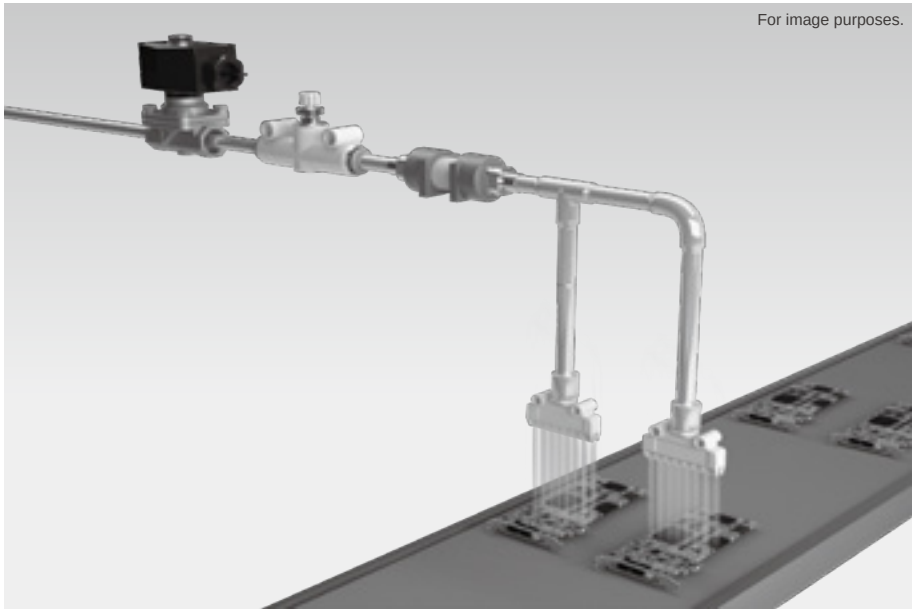

For image purposes.

Effect

Various air pressure components available that are compatible with targeted workpieces, including oil-prohibited specifications and clean room use.
The nozzle employs the highly heat-resistant and chemical-resistant PPS resin.

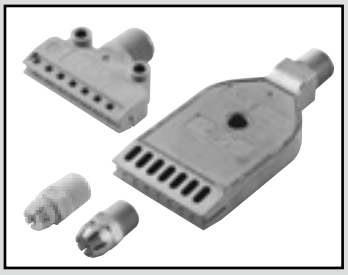

Air blow nozzle (Energy-saving)

BNE Series

● Port size: R1/4

RoHS

Features

■ An energy-saving air nozzle that sucks in the surrounding air and amplifies it.

■ Two types available: flat type that blows uniformly along the width and round type that blows with a pinpoint aim.
Also, uniformly distributed air injection enables high blowing efficiency and reduced air consumption.

■ Resin type and metal type available, allowing for selection based on the use or environment.

■ A work environment-friendly silent design.

Air patterns

● Flat



● Round



Specifications

1 MPa ≈ 145.0 psi, 1 MPa = 10 bar

Item	BNE-8P10F	BNE-8S10F	BNE-8P10R	BNE-8S10R
Max. working pressure MPa	0.7 (≈101 psi, 7 bar)	1.0 (≈145 psi, 10 bar)	0.7 (≈101 psi, 7 bar)	1.0 (≈145 psi, 10 bar)
Heat resistance temperature °C	120 (248°F)	400 (752°F)	60 (140°F)	400 (752°F)
Port size R	1/4			
Weight g	9	144	2	12
Hole diameter mm	1.0			
Number of holes l	16	16	8	8
Air consumption *1 ℓ/min (ANR)	440		245	

*1: Air consumption is the reference value of atmospheric pressure conversion at standard pressure 0.3 MPa.

How to order

BNE - 8 P 10 F

Ⓐ Bore size Ⓑ Material Ⓒ Hole size Ⓓ Shape

Code	Description
Ⓐ Bore size	
8	R1/4
Ⓑ Material	
P	Resin
S	Metal (stainless steel)
Ⓒ Hole size	
10	ø1.0
Ⓓ Shape	
F	Flat (42 mm)
R	Round

Air consumption characteristics

*Values in the air consumption characteristics graph are reference values and are not guaranteed.

■ Flat

● BNE-8P10F

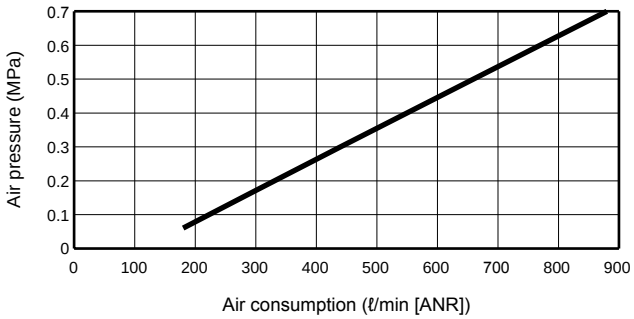

● BNE-8S10F

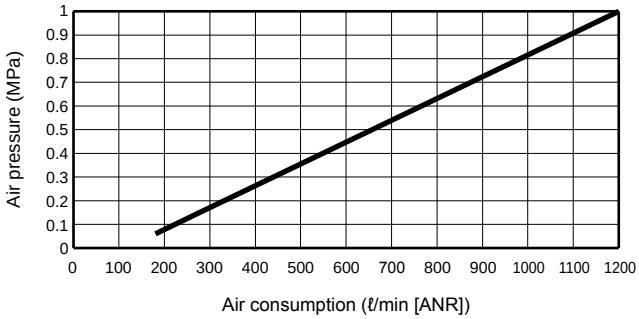

■ Round

● BNE-8P10R

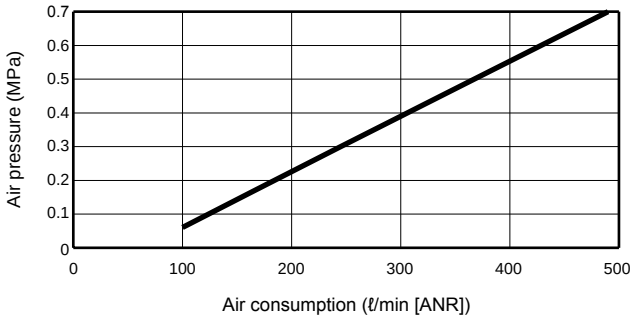

● BNE-8S10R

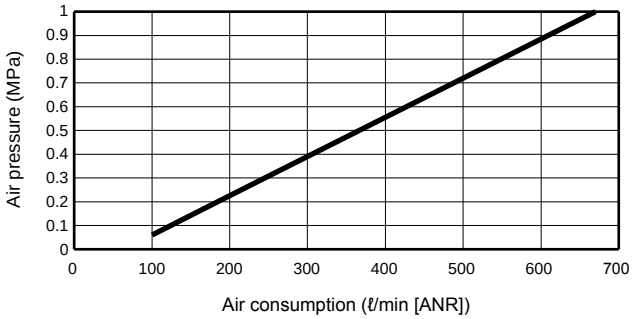

Dimensions

■ Flat

● BNE-8P10F

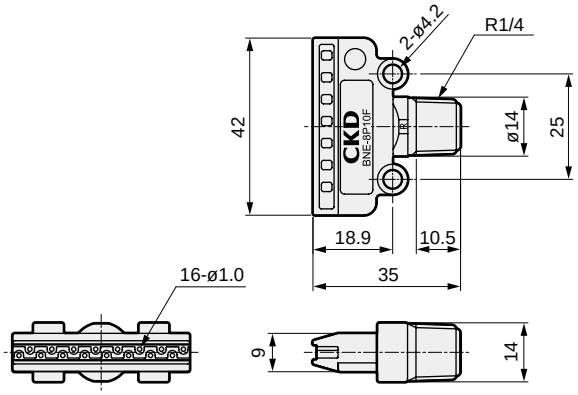

Material: PPS

● BNE-8S10F

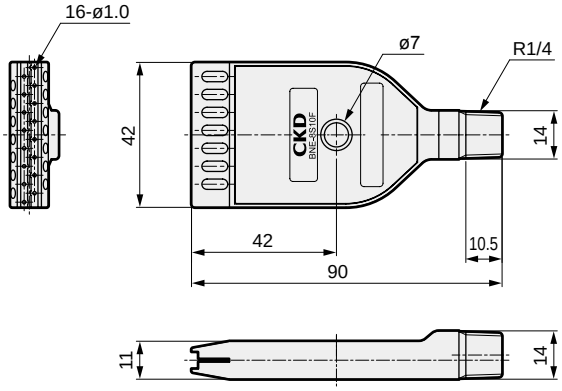

Material: Stainless steel 316L

■ Round

● BNE-8P10R

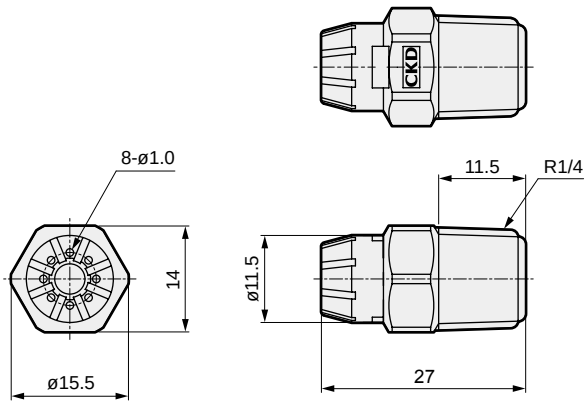

Material: PP

● BNE-8S10R

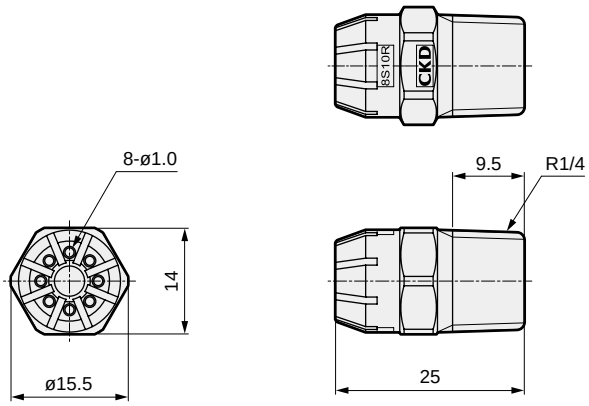

Material: Stainless steel 316L

(Reference) Amplification effect characteristics

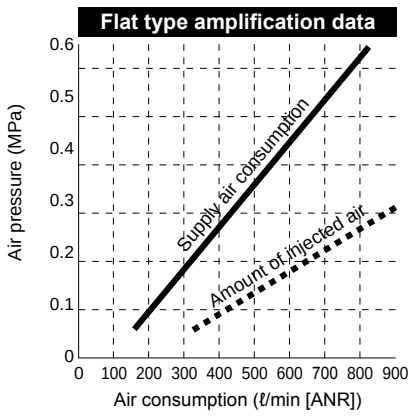

(Reference) Silent effect characteristics

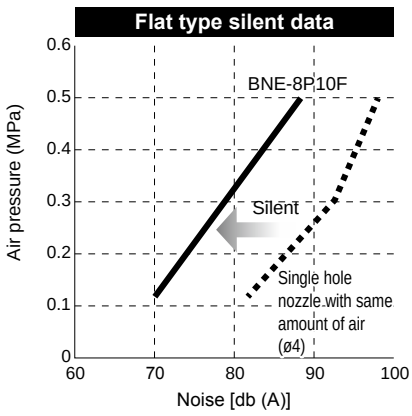

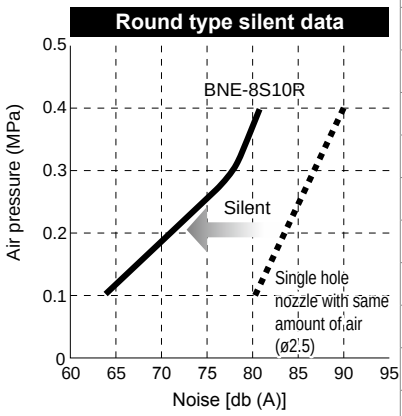

● Measurement position: 1 m in front of nozzle (1 m height)
● Background noise value: 58 dB (A)

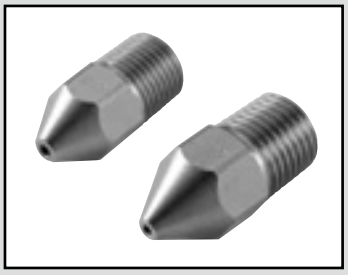

Air blow nozzle (General)

BN Series

● Port size: R1/8, R1/4

RoHS

Features

■ A single hole nozzle that injects air very directly.
■ Uses highly corrosion-resistant stainless steel 303.
■ Ideal for use in dense areas and in large amounts because it is compact and has good cost performance.

Air pattern



Specifications

1 MPa ≈ 145.0 psi, 1 MPa = 10 bar

Item		BN-6S10P	BN-8S10P	BN-6S15P	BN-8S15P	BN-6S20P	BN-8S20P	BN-6S25P	BN-8S25P
Max. working pressure	MPa	1.0 (≈145 psi, 10 bar)							
Heat resistance temperature	°C	400 (752°F)							
Port size	R	1/8	1/4	1/8	1/4	1/8	1/4	1/8	1/4
Weight	g	7.2	19	7.2	19	7.2	19	7.2	19
Hole diameter	mm	1.0		1.5		2.0		2.5	
Air consumption *1	ℓ/min (ANR)	35		80		138		215	

*1: Air consumption is the reference value of atmospheric pressure conversion at standard pressure 0.3 MPa.

How to order

● Blow nozzle (General)

BN - 8 S 10 P

Ⓐ Bore size
Ⓑ Material
Ⓒ Hole size
Ⓓ Shape

Code	Description
Ⓐ Bore size	
6	R1/8
8	R1/4
Ⓑ Material	
S	Metal (stainless steel)
Ⓒ Hole size	
10	ø1.0
15	ø1.5
20	ø2.0
25	ø2.5
Ⓓ Shape	
P	Direct (point)

Dimensions

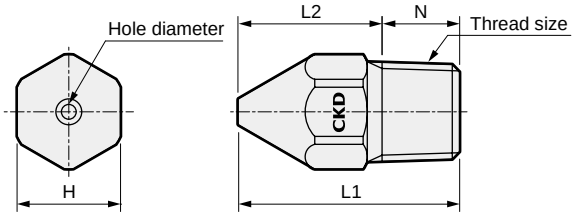

Material: Stainless steel 303

Model No.	Thread size	L1	L2	H	N	Hole diameter
BN-6S10P	R1/8	21	14	10	7	1.0
BN-6S15P	R1/8	21	14	10	7	1.5
BN-6S20P	R1/8	21	14	10	7	2.0
BN-6S25P	R1/8	21	14	10	7	2.5
BN-8S10P	R1/4	30	19.5	14	10.5	1.0
BN-8S15P	R1/4	30	19.5	14	10.5	1.5
BN-8S20P	R1/4	30	19.5	14	10.5	2.0
BN-8S25P	R1/4	30	19.5	14	10.5	2.5

Air consumption characteristics

*Values in the air consumption characteristics graph are reference values and are not guaranteed.

● BN-□S10P

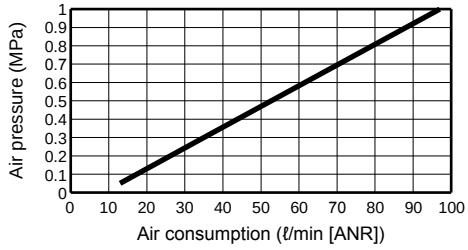

● BN-□S15P

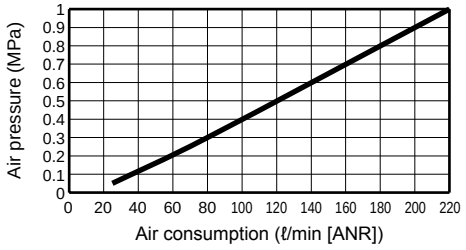

● BN-□S20P

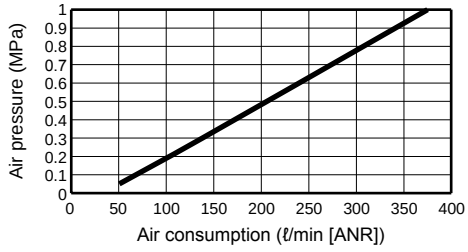

● BN-□S25P

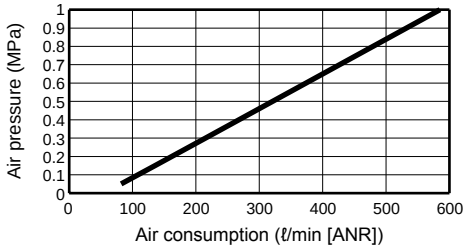

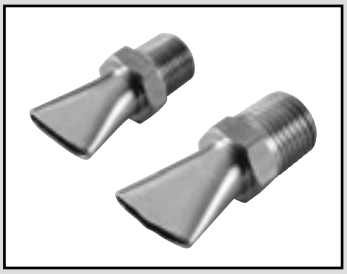

Air blow nozzle (Blower specification)

BNB Series

● Port size: R1/8, R1/4

RoHS

Features

■ A combination blower, compressor and air nozzle that injects blower air efficiently.

■ Can be attached in narrow spaces due to a compact size.

■ A highly-efficient nozzle that can inject air over a wide range with high force

Specifications

1 MPa ≈ 145.0 psi, 1 MPa = 10 bar

Item			BNB-6S15T	BNB-8S15T
Max. working pressure		MPa	0.7 (≈101 psi, 7 bar)	
Heat resistance temperature		°C	400 (752°F)	
Port size		R	1/8	1/4
Weight		g	10	16
Hole size (W x H)		mm	13 x 1.5	17 x 1.5
Air Consumption rate	*1	m³/min (ANR)	0.17	0.24
	*2	ℓ/min (ANR)	736	1,016

*1: Air consumption is the reference value of atmospheric pressure conversion at standard pressure 20 kPa.
*2: Air consumption is the reference value of atmospheric pressure conversion at standard pressure 0.3 MPa.

(Reference) Force distribution

● BNB-6S15T

Spray pressure: 20 kPa, air consumption: 0.17 Nm³/min, spray height: 100 mm

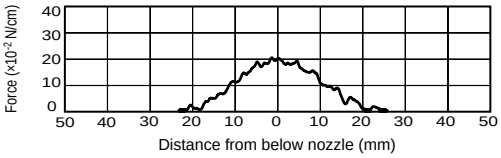

● BNB-8S15T

Spray pressure: 20 kPa, air consumption: 0.24 Nm³/min, spray height: 100 mm

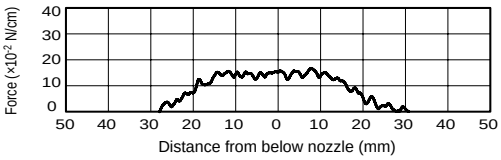

How to order

BNB - 8 S 15 T

A Bore size B Material C Hole size D Shape

Code	Description
A Bore size	
6	R1/8
8	R1/4
B Material	
S	Metal (stainless steel)
C Hole size	
15	13×1.5 (R1/8), 17×1.5 (R1/4)
D Shape	
T	Fan-type

Dimensions

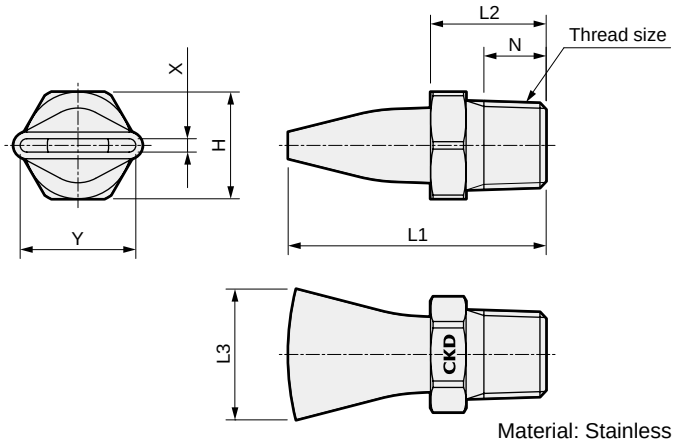

Material: Stainless steel 304

Model No.	Thread size	L1	L2	L3	X	Y	H	N
BNB-6S15T	R1/8	29	13	14.7	1.5	13	12	7
BNB-8S15T	R1/4	37	17.5	18.9	1.5	17	14	10.5

Air consumption characteristics (with blower air)

*Values in the air consumption characteristics graph are reference values and are not guaranteed.

● BNB-6S15T

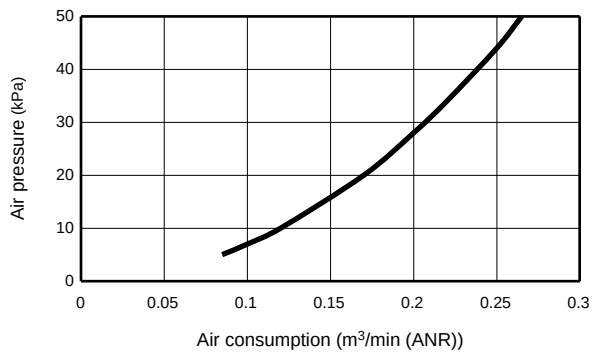

● BNB-8S15T

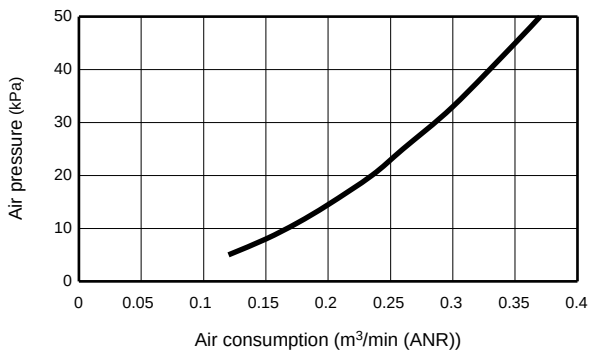

Safety Precautions

Be sure to read this section before use.
For general precautions, refer to Intro Page 63.

Product-specific cautions: Air blow nozzle BN* Series

Design/selection

⚠WARNING

■ Use the product within specifications.
Consult with CKD when using the product for special applications.

■ Use the product at below the maximum working pressure.
Also avoid sudden pressure increase.
It may cause the product to break or burst out.

■ Use the product within the specified heat resistance temperature.
It may cause the product to break or burst out.

■ Avoid using the products in freezing environments.
It may cause the product to break or burst out.

■ Avoid installing this product outdoors or where it is exposed to direct sunlight.

■ Be sure to check the nozzle material before use in the working environment. The chemical resistance of nozzle material is shown below.

Chemical name	Nozzle material				
	Stainless steel 303	Stainless steel 304	Stainless steel 316L	PP	PPS
Hydrochloric acid	×	×	×	○	○
Concentrated hydrochloric acid	×	×	×	△	○
Sulfuric acid (35%)	×	×	×	○	○
Concentrated sulfuric acid	×	×	○	×	△
Nitric acid (35%)	○	○	○	×	△
Concentrated nitric acid	△	○	△	×	×
Acetic acid	△	○	○	○	○
Sodium hydroxide (Caustic soda)	○	○	○	○	○
Aqueous ammonia	○	○	○	○	○
Acetone	○	○	○	○	○
Ethyl alcohol	○	○	○	○	○

○: Usable, △: Usable short-term, ×: Unusable

⚠CAUTION

■ Confirm before use that the product will withstand the working environment.

Mounting, installation and adjustment

⚠CAUTION

■ Before attaching the nozzle, flush out the pipe to remove any foreign objects.

■ Use sealant tape on the threaded end of the nozzle.

■ When connecting pipes, wrap sealant tape in the opposite direction from the threading, from the inside position to within 2 mm from the pipe end.

● If sealant tape protrudes from the pipe threads, it could be cut when screwing the bolts in. This could cause the tape to enter the solenoid valve, causing failures.



■ When mounting the nozzle, pay attention to the spray direction.

■ When attaching the nozzle, after screwing it on by hand, retighten it with a tool. Check that the tool's hexagon face and wrench are the correct size.

[Reference values]

Port thread		Tightening torque
Size	Material	N·m
R1/8	Stainless steel 303	8
	Stainless steel 304	
R1/4	Stainless steel 303	15
	Stainless steel 304	
	Stainless steel 316L	
	PP	2
	PPS	3 to 3.5

■ Do not tighten while pressure is applied.

■ After attaching the bent pipe and elbow, strengthen the nozzle attachment as much as possible. It may not achieve standard performance when turbulence occurs.

BNE-8S10F

■ When using the fixing hole in the center of the nozzle, insert a rubber packing or other cushion between the nozzle and the nuts and bolts.
Do not fix the nozzle in a tilted position.
It could break.

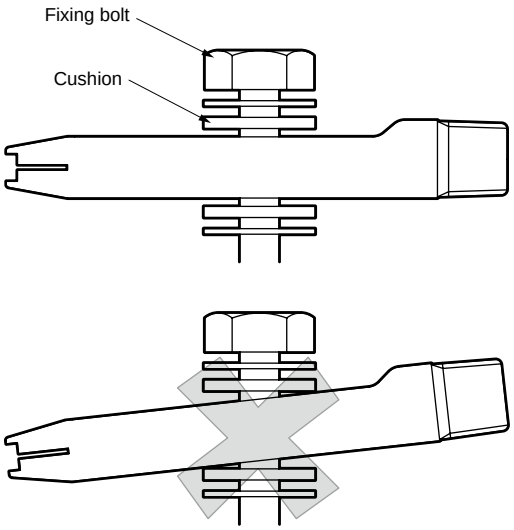

Use/maintenance

⚠CAUTION

■ Do not damage the nozzle. Do not poke the nozzle's spray holes with anything hard (needles, nails, etc.).

■ Do not apply sudden impact or excessive force.

■ Store in a clean, dust-free place.

■ Periodically check that there is no clogging in the spray holes.

■ When there is clogging in the spray holes, detach the nozzle from the pipe and remove the foreign object with a soft brush.

MEMO

Air unit components

	Page
Clean air unit (CAU30)	933
Air unit (CXU)	947

Clean air unit

CAU30

■ **Air unit components**

Overview

Compact and completely oil-prohibited clean air supply unit without piping work.

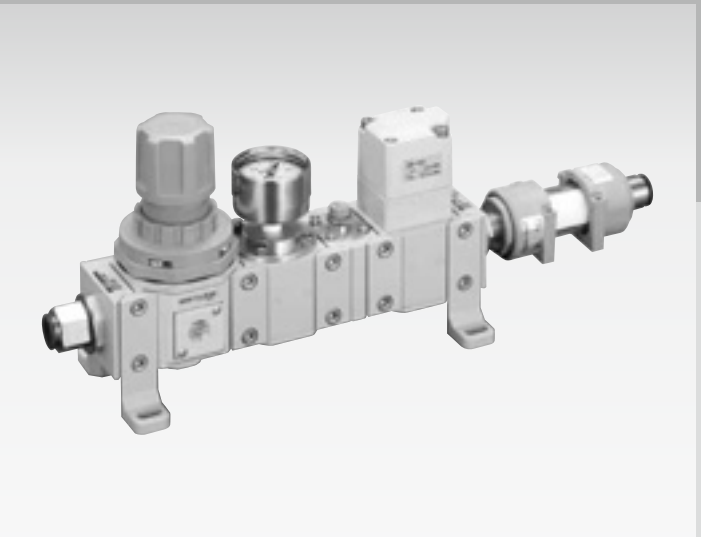

CONTENTS

Product introduction	934
● CAU30	936
⚠ Safety precautions	943

Clean blow system

with one unit

High rigidity aluminum body with transparent filter

Piping-free unit

Just insert tubes for piping.
The clean air unit significantly reduces assembling work and its compact body saves space.
Simplified model number management for ordering.

All oil-prohibited specifications

Fluid passage parts are all degreased and cleaned, and manufactured in a dust-free room from assembling to packaging.

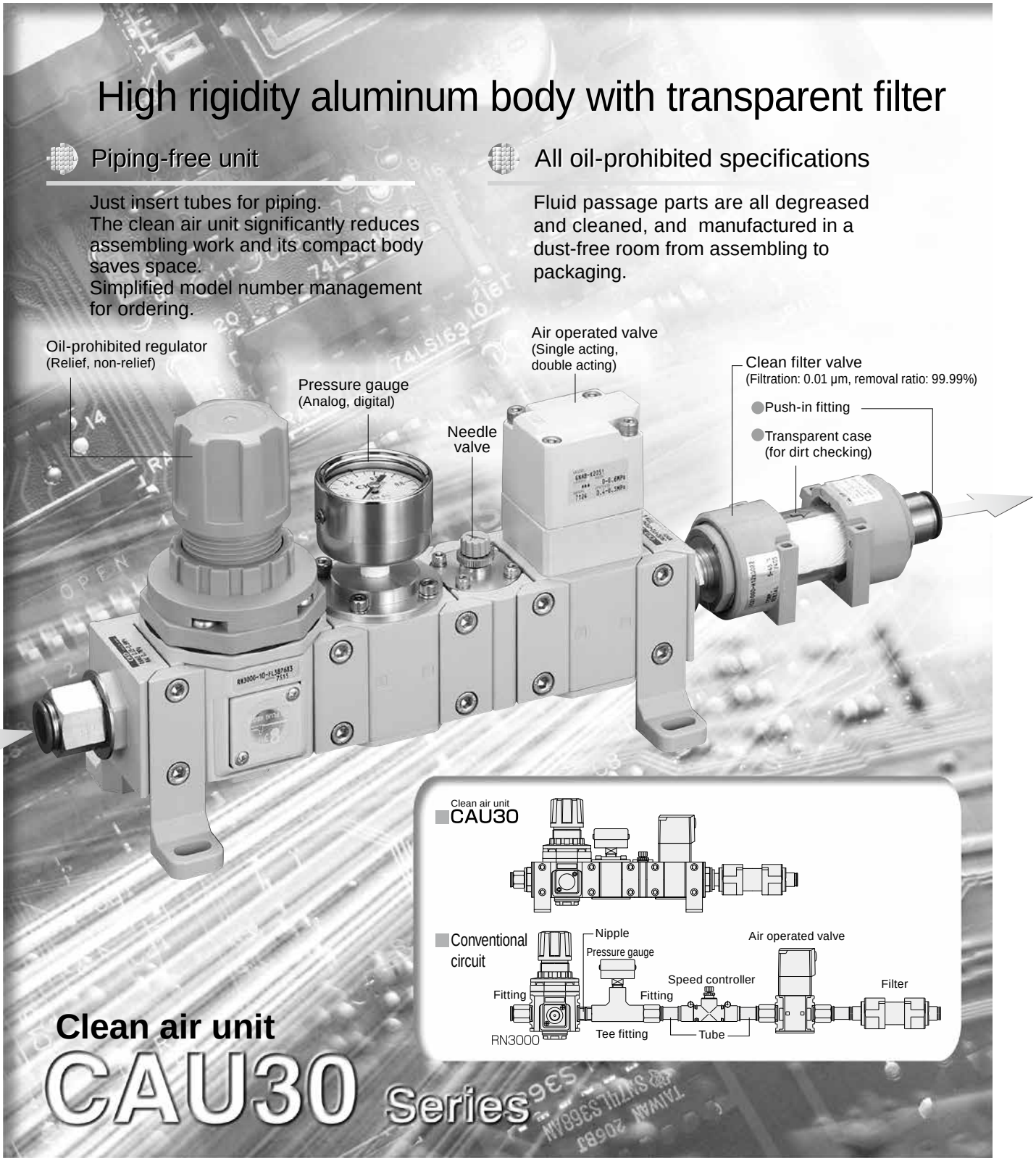

Clean air unit

CAU30 Series

Compact and clean air supply unit with all-oil-prohibited specification requiring little piping work.

High rigidity aluminum body

The body made of aluminum has high rigidity (except for the filter).

Dual-flow available

Wider variation of air supply.

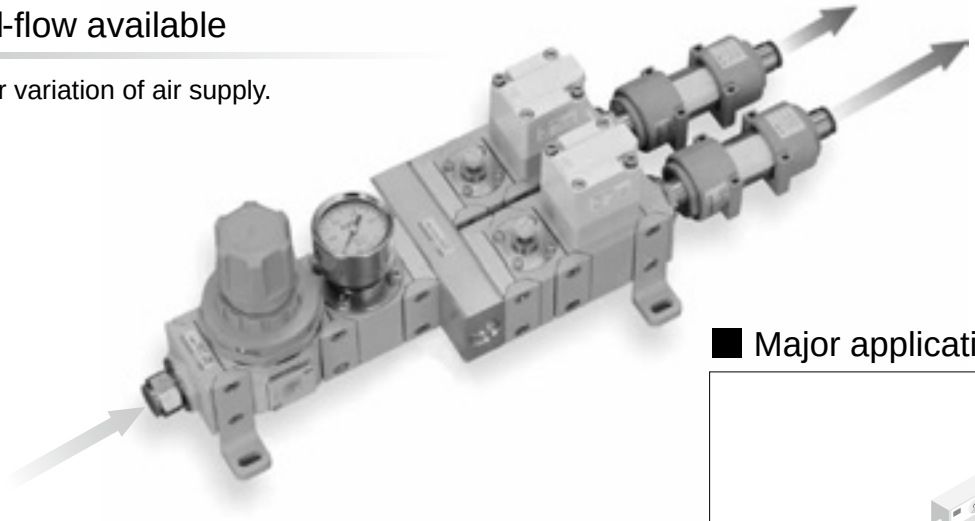

High air flow rate

Provides high stable flow of 400 ℓ/min (ANR).

Modular type allowing flexible combination

Can be combined with various instruments for different uses.
This unit can be connected with air operated valves and needle valves, which was not possible before.

Best suited to the liquid crystal industry

This unit has been developed mainly for ionizers.
It can also be used for automobile parts, foods, and medicine.

High precision filtration of 0.01 µm

A hollow fiber membrane element is used as a filter.
Particle filtration of 0.01 µm and removal ratio of 99.99% are ensured.

Visual dirt checking

The filter with its transparent case allows visual checking of dirt, making the maintenance work easy.

Major applications

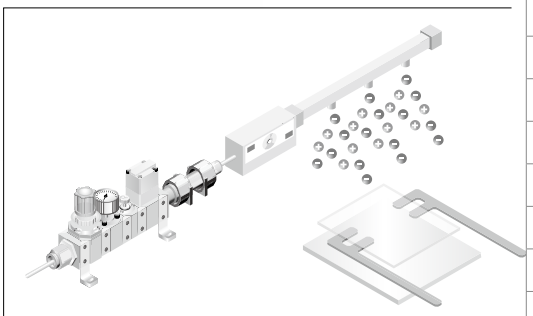

Air supply to ionizer

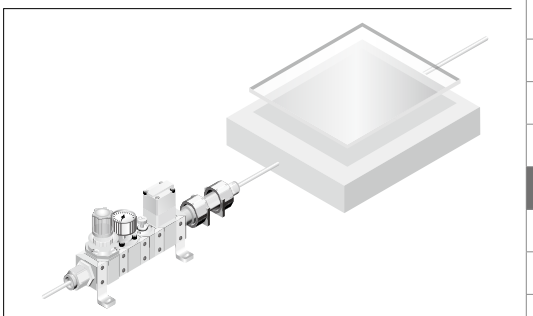

Air supply for hovering conveyance

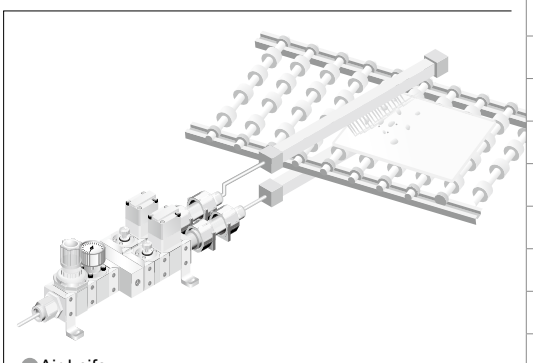

Air knife

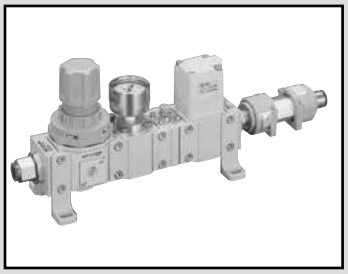

Clean air unit

CAU30 Series

● Port size: ø10, ø12

RoHS CAD

Common specifications

Item		Clean air unit
Working fluid		Compressed clean air
Max. working pressure	MPa	0.7 (≈100 psi, 7 bar) (0.5 (≈73 psi, 5 bar) for low pressure)
Proof pressure	MPa	1 (≈150 psi, 10 bar)
Ambient / fluid temperature	°C	5 (41°F) to 45 (113°F)
Set pressure range	MPa	0.05 (≈7.3 psi, 0.5 bar) to 0.6 (≈87 psi, 6 bar) (0.05 (≈7.3 psi, 0.5 bar) to 0.3 (≈44 psi, 3 bar) for low pressure)
Port size (IN/OUT)		ø10,ø12
Filtration rating	μm	0.01 (removal efficiency 99.99%)
Processing flow rate	ℓ/min	400 *1
Differential pressure-resistant *2	MPa	0.5 (≈73 psi, 5 bar)
Dial value (needle position)	(times)	12 and over
Pilot air pressure for valve	MPa	0.4 (≈58 psi, 4 bar) to 0.5 (≈73 psi, 5 bar)
Pilot port size for valve		Rc1/8
Oil-prohibited specifications		Oil-prohibited fluid passage section

*1: Flow rate at 0.7 MPa primary pressure, 0.5 MPa set pressure and 0.15 MPa pressure drop. Refer to the flow characteristics table for details.
*2: Pressure difference between before and after the filter.

Pressure switch specifications (digital pressure gauge: PPX-R10N-6M-P12)

Item		Digital pressure sensor
Power supply voltage		12 to 24 VDC ±10% Ripple P−P 10% or less
Power consumption		Normal: 720 mW or less (current consumption 30 mA or less at 24 V power supply voltage) ECO mode: 480 mW of less at STD (current consumption 20 mA or less at power supply voltage 24 V), 360 mW or less at FULL (current consumption 15 mA or less at power supply voltage 24 V)
Comparison outputs (comparison output 1, comparison output 2)		NPN transistor/open collector · Max. inrush current: 100 mA · Applied voltage: 30 VDC or less (comparison output - 0 V interval) · Residual voltage: 2 V or less (at inrush current 100 mA)
	Output operation	Select NO/NC with key operation
	Output mode	EASY mode/hysteresis mode/window comparator mode
	Hysteresis	Min. 1 digit (variable)
	Repeatability	±0.2% F.S. (within ±2 digits)
	Response time	2.5 ms, 5 ms, 10 ms, 25 ms, 50 ms, 100 ms, 250 ms, 500 ms, 1000 ms, 5000 ms select by key operation
	Short circuit protection	Equipped
Display		4-digit + 4-digit 3-color LCD display (display updating cycle: 250 ms, 500 ms, 1000 ms select by key operation)
Temp characteristics at +20°C		Within ±1% F.S.
Lead wire		2 m cable with connector

Weight

● 1 system (Unit: g)

Model No.	Weight
CAU30-□-R□F (regulator, filter)	800

● 2 systems (Unit: g)

Model No.	Weight
CAU30-□-2-R□F (regulator, filter)	1490

Additional weight (Unit: g)

Option (including joiner)		Weight
Pressure gauge	T6: With pressure outlet port block	265
	GY49: Analog pressure gauge	345
	PX1: Digital pressure gauge	350
Needle	N1: Needle block	165
Air operated valve	V1: Air operated valve block (single acting)	390
	V3: Air operated valve block (double acting)	390

Additional weight (Unit: g)

Option (including joiner)		Weight
Pressure gauge	T6: With pressure outlet port block	265
	GY49: Analog pressure gauge	345
	PX1: Digital pressure gauge	350
Needle	N1: Needle block	330
Air operated valve	V1: Air operated valve block (single acting)	780
	V3: Air operated valve block (double acting)	780

How to order

CAU30 - H10 - 2 - R1 T6N1V1 F - X1

- CAU30 — Model No.
- H10 — Ⓐ Port size
- 2 — Ⓑ System
- R1 — Ⓒ Regulator
- T6N1V1 — Ⓓ Assembled option
- F — Filter
- X1 — Ⓔ Pressure gauge orientation

Code	Description
Ⓐ Port size	
H10	ø10
H12	ø12
Ⓑ System	
Blank	1 system
2	2 system
Ⓒ Regulator	***1**
R1	Setting 0.05 to 0.6 MPa Pressure relief
R2	Setting 0.05 to 0.6 MPa Non-relief
RL1	Setting 0.05 to 0.3 MPa (for low pressure) Relief
RL2	Setting 0.05 to 0.3 MPa (for low pressure) Non-relief
Ⓓ Assembled option	***2**
Pressure gauge: Blank	Without pressure gauge block
Pressure gauge: T6 *3	With pressure outlet port blocked (Pressure outlet port is left open)
Pressure gauge: GY49 *4	With analog pressure gauge assembled (G49D-6-□-P94)
Pressure gauge: PX1 *5	With digital pressure sensor assembled (PPX-R10N-6M-P12)
Needle: Blank	Without needle block
Needle: N1	With needle block
Air operated valve: Blank	Without air operated valve block
Air operated valve: V1	Single acting (normally closed)
Air operated valve: V3	Double acting

Ⓔ Pressure gauge orientation	***6**
Blank	Standard 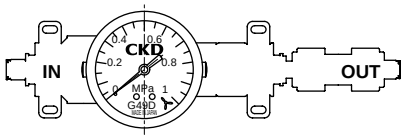
X1	90° clockwise 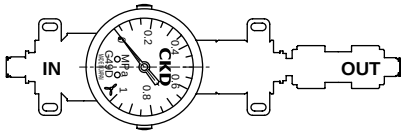
X2	180° clockwise 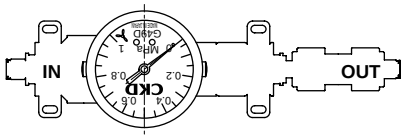
X3	270° clockwise 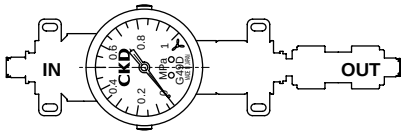

⚠ Precautions for model No. selection

*1
Pressure range of pressure gauge (MPa)

	RL1 or RL2	R1 or R2
G49D	0 to 0.4	0 to 0.7
PPX	-0.100 to 1.000	

*2: Select pressure gauge, needle and air operated valve options.
*3: If "T6" option code is selected, only a pressure outlet port block is attached. The pressure outlet port size is Rc 1/8.
*4: If the "GY49" pressure gauge is selected together with the "RL1" or "RL2" regulator, the pressure gauge will be for low pressure (0 to 0.4 MPa pressure range).
(It will be for a standard pressure in the -0.100 to 1.000 MPa pressure range in the case of a "PX1" pressure sensor.)
*5: Output of the digital pressure sensor assembly (PPX) is NPN transistor 2 output points (made to order).
*6: The figure for pressure gauge orientation uses a "GY49" pressure gauge as an example. The same orientation applies to the "PX1" pressure sensor.

[Example of model No. 1]

CAU30-H10-R1GY49N1V1F

Ⓐ Port size : ø10
Ⓑ System : 1 system
Ⓒ Regulator : 0.05 to 0.6 MPa relief
Ⓓ Assembled option : Analog pressure gauge (G49D), needle, air operated valve (single acting)
Ⓔ Pressure gauge orientation : Standard

[Example of model No. 2]

CAU30-2-H12-RL1PX1V3F-X2

Ⓐ Port size : ø12
Ⓑ System : 2 system
Ⓒ Regulator : 0.05 to 0.3 MPa relief
Ⓓ Assembled option : Digital pressure sensor (PPX), air operated valve (double acting) assembly
Ⓔ Pressure gauge orientation : Turn 180° clockwise

Internal structure and fluid passage materials

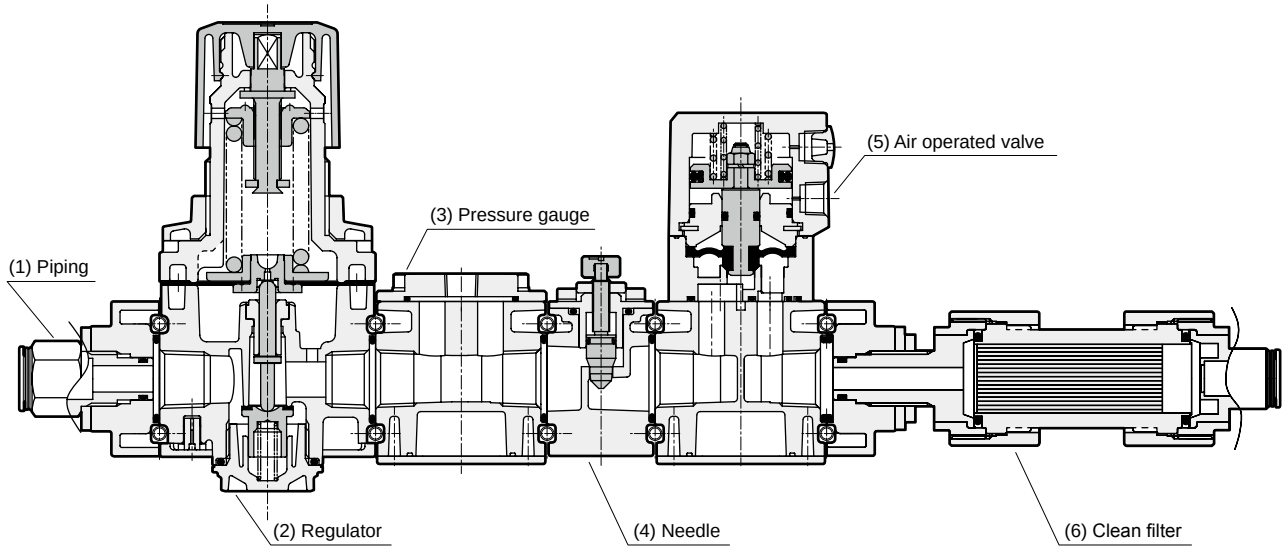

No.	Part name		Fluid passage material
(1)	Piping		Aluminum alloy, copper alloy (nickeling), fluoro rubber, nitrile rubber, hydrogenated nitrile rubber
(2)	Regulator		Aluminum alloy, zinc alloy, nitrile rubber, hydrogenated nitrile rubber, fluoro rubber, polyacetal resin
(3)	Pressure gauge	Port only	Aluminum alloy, fluoro rubber
		G49D	Stainless steel, steel (chrome plating)
		PX1	Stainless steel, hydrogenated nitrile rubber
(4)	Needle		Aluminum alloy, copper alloy (nickeling), nitrile rubber, fluoro rubber
(5)	Air operated valve		Aluminum alloy, stainless steel, fluoro rubber, polypropylene, ethylene propylene rubber
(6)	Clean filter		Aluminum alloy, fluoro rubber, polypropylene, urethane, polyamide

Dimensions (1 system) CAD

● CAU30-□-R□GY49N1V□F (regulator, pressure gauge, needle, valve, filter)

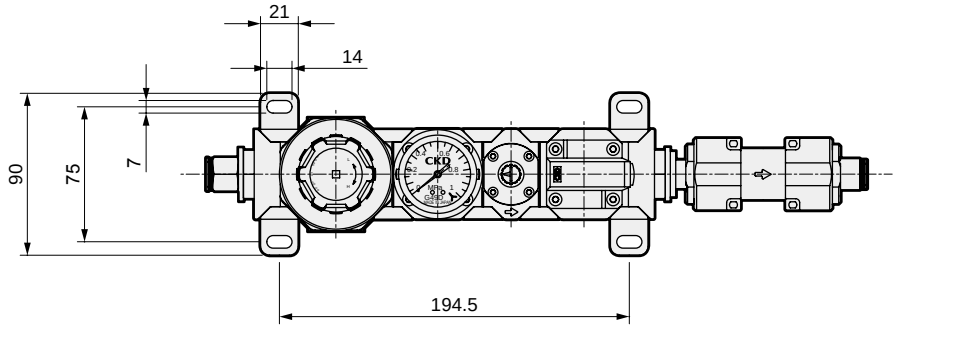

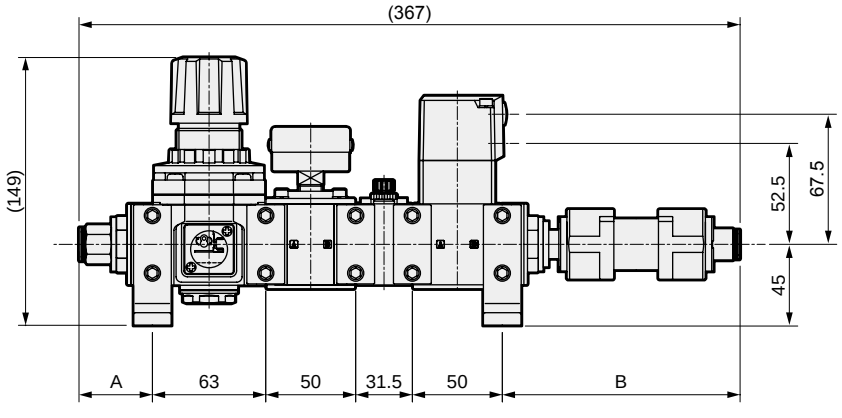

Port size dimensions table

Port size	A	B
H10	41	132
H12	42.5	133.5

* Dimensions of “T6” and “PX1” pressure sensors are the same as those of “GY49”.

Dimensions (1 system)

● CAU30-□-R□N1V□F
(regulator, needle, valve, filter)

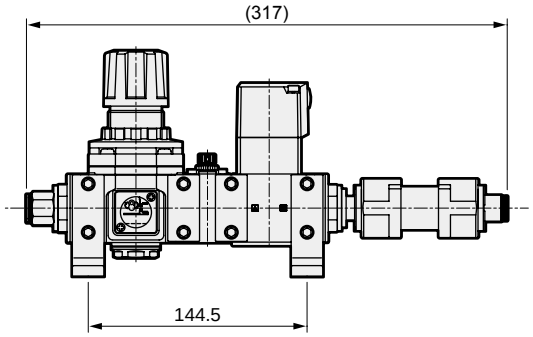

● CAU30-□-R□GY49V□F
(regulator, pressure gauge, valve, filter)

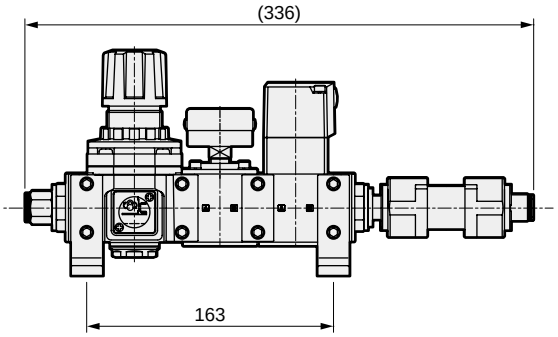

● CAU30-□-R□GY49N1F
(regulator, pressure gauge, needle, filter)

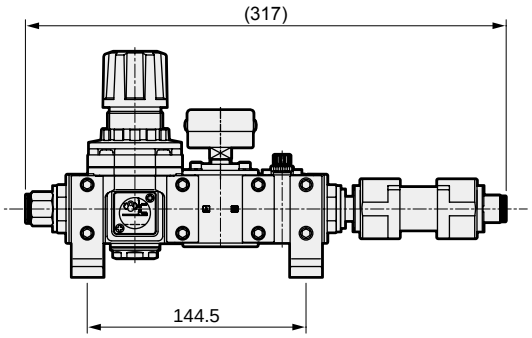

● CAU30-□-R□GY49F
(regulator, pressure gauge, filter)

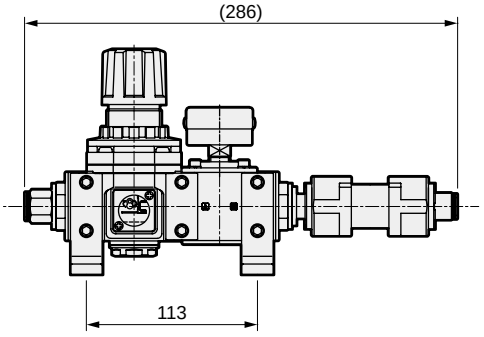

● CAU30-□-R□V□F
(regulator, valve, filter)

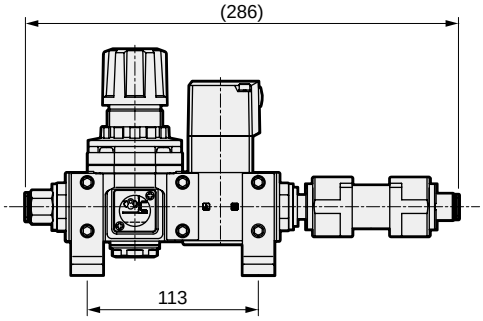

● CAU30-□-R□F
(regulator, filter)

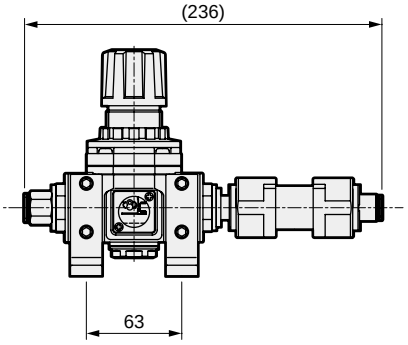

● CAU30-□-R□N1F
(regulator, needle, filter)

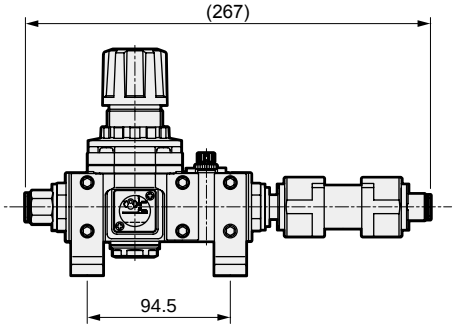

* Dimensions of “T6” and “PX1” pressure gauges are the same as those of “GY49”.

Dimensions (2 systems)

● CAU30-□-2-R□GY49N1V□F (regulator, pressure gauge, needle, valve, filter)

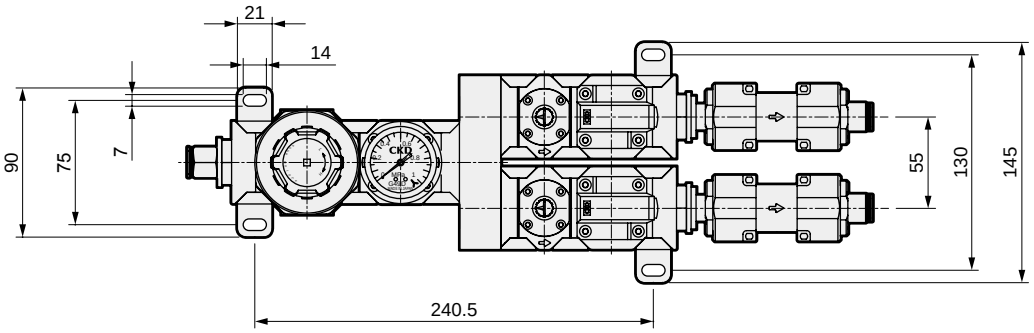

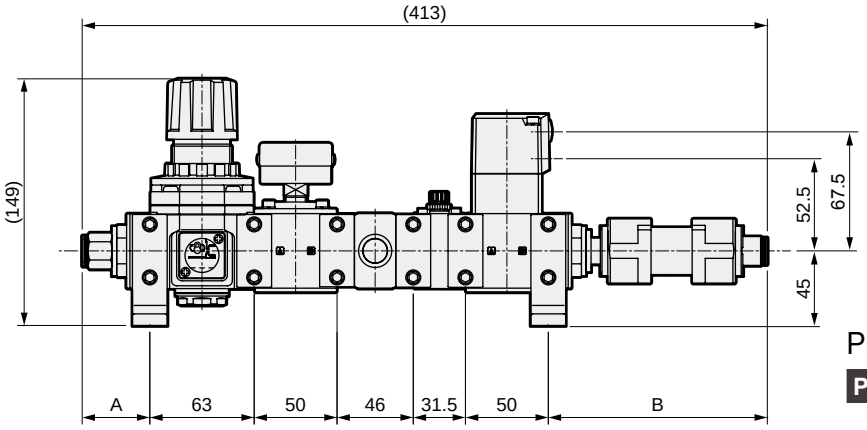

Port size dimensions table

Port size	A	B
H10	41	132
H12	42.5	133.5

● CAU30-□-2-R□N1V□F
(regulator, needle, valve, filter)

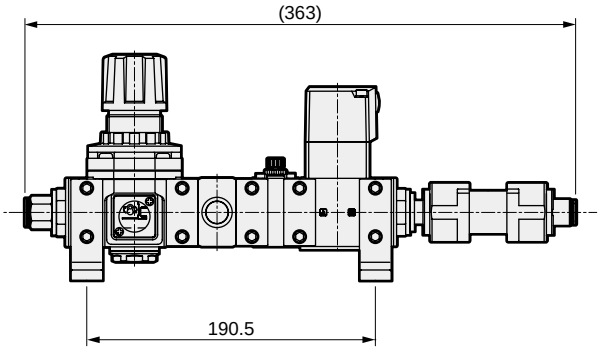

● CAU30-□-2-R□GY49V□F
(regulator, pressure gauge, valve, filter)

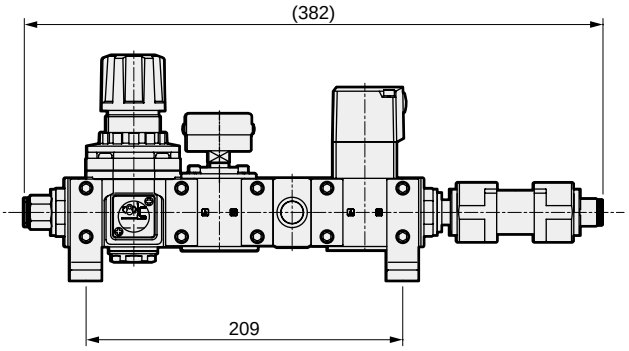

* Dimensions of “T6” and “PX1” pressure gauges are the same as those of “GY49”.

Dimensions (2 systems)

● CAU30-□-2-R□GY49N1F
(regulator, pressure gauge, needle, filter)

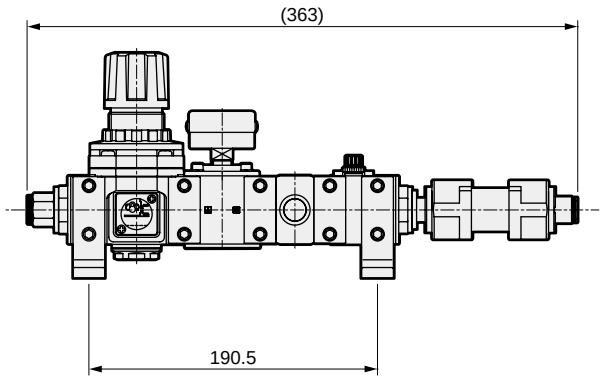

● CAU30-□-2-R□GY49F
(regulator, pressure gauge, filter)

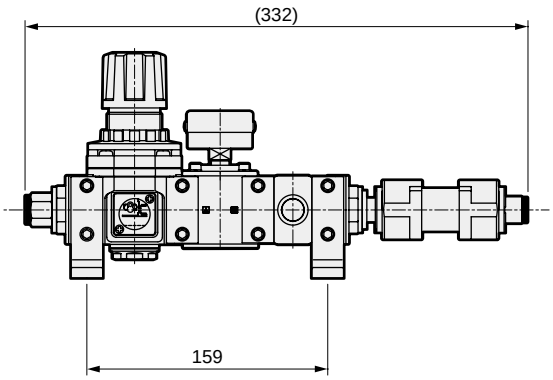

● CAU30-□-2-R□V□F
(regulator, valve, filter)

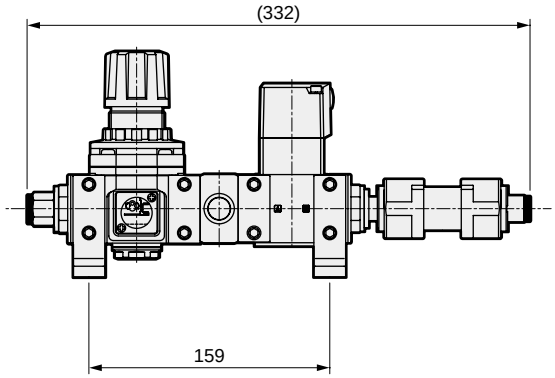

● CAU30-□-2-R□F
(regulator, filter)

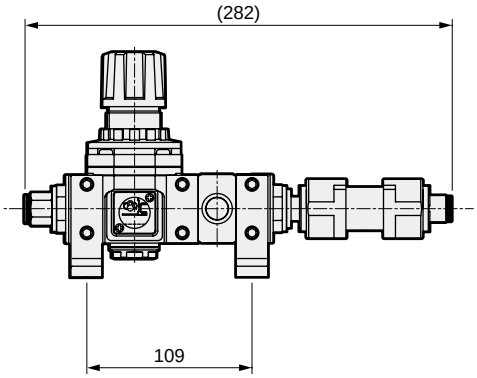

● CAU30-□-2-R□N1F
(regulator, needle, filter)

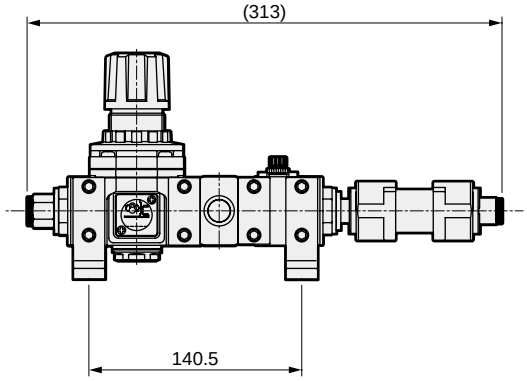

* Dimensions of “T6” and “PX1” pressure gauges are the same as those of “GY49”.

Flow characteristics

● Regulator's set pressure and the corresponding flow characteristics

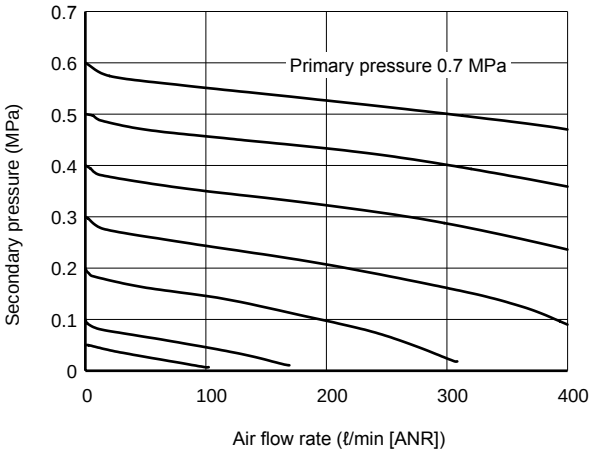

● Dial value (needle position) and the corresponding flow characteristics

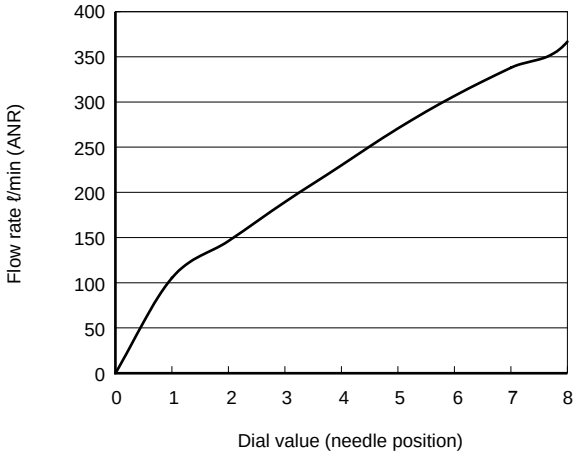

*1: Flow characteristics when the regulator, pressure gauge, needle valve, air operated valve, and filter are attached and the needle is fully open.

Safety precautions

Pneumatic components Warnings/cautions

Be sure to read this section before use.

Refer to Intro Page 63 for precautions for general pneumatic components.

Design/selection

1. Common

⚠ WARNING

■ Use the product in the range of conditions specified for the product.

■ This product is designed for industrial use. Do not use for medical purposes, or in any equipment or circuit that concerns human life.

■ Take measures to prevent physical harm or property damage in the event of failure of this product.

■ Understand the characteristics of compressed air before designing a pneumatic circuit.

■ For detailed cautions, refer to the catalog for each piece of equipment.

2. Regulator

⚠ WARNING

■ Output pressure exceeding the regulator's set pressure could result in damage or faulty operation of the secondary side devices. Be sure to install a safety device.

■ As the regulator may not always be usable with the secondary side sealed circuit or balance circuit, consult with CKD.
Depending on use, such as when back pressure rises, the set pressure may increase 0.2 MPa.

⚠ CAUTION

■ When the primary pressure is released, the secondary pressure flows to the primary side.
If a problem occurs in another device due to the inflow of secondary-side fluid to the primary side, provide a circuit to retain the pressure.

■ The setting range for the regulator's secondary side pressure should be within 85% of that of the primary side. Otherwise, the pressure drop may increase.

■ When used in applications where primary pressure is 0.7 MPa or more, keep the difference in primary and set pressure within 0.4 MPa.
Pulsation could occur if the difference in pressures is large or if secondary piping is large. If so, lower primary side pressure or restrict the secondary line. Contact CKD if the pulsation still continues.

■ Turning the knob in the L direction from the set pressure 0, activates the stopper and the knob does not turn.
Note that if torque is forcibly applied in the L direction, the knob may lock and become inoperable.

3. Needle

⚠ CAUTION

■ This valve cannot be used as a stop valve that requires no leakage.
Slight leakage is allowed for in this product's specifications.

4. Air operated valve

⚠ WARNING

■ This product cannot be used as an emergency shut-off valve.
The valves listed in this catalog are not designed as valves to ensure safety such as emergency shutoff valves. When using in such a system, always take separate measures that will ensure safety.

⚠ CAUTION

■ External pilot air
(1) Draining: Compressed air contains a large amount of drainage (water, oil oxides, tar, foreign matter). This is a factor that significantly reduces the reliability of the pneumatic components. For drainage measures, improve air quality by dehumidifying with an after cooler or dryer, removing foreign matter with a filter, and removing tar with a tar removal filter, etc.
(2) Filter: Install a filter with a 5 µm or less filter element.

5. Inline clean filter

⚠ WARNING

■ Do not use this product in an atmosphere containing organic solvents or chemicals, etc., or where the product could come in contact with them.
Not observing this could damage the polyamide housing.

⚠ CAUTION

■ Do not create flow exceeding the max. processing flow rate.
Doing so may degrade the filtration accuracy and damage the element membrane.

■ This device cannot be used as an absolute filter.
Filtration accuracy is 99.99% within specified conditions. Do not use for applications where foreign matter is absolutely prohibited (e.g., direct blowing on wafers).

■ Alcohol is used in the manufacturing line of some parts of this product.

* For precautions on the digital pressure sensor (PPX-R10N-6M-P12), refer to CKD "Pneumatic, Vacuum, and Auxiliary Components" (CB-024SA).

Mounting, installation and adjustment

1. Common

⚠ CAUTION

■ Install the product where it is not exposed to direct sunlight.

■ Do not install this product in a location where it may be subject to vibrations or shocks.

■ Securing maintenance space
- Secure sufficient space for maintenance and inspection.

■ Always thoroughly read the instruction manual before installing this product.

■ Match the flow direction and the direction of the arrow on the product for correct connection.

■ Perform piping so no excessive force is applied to the product.
- Protect the product from external force that may be applied during installation, pulling, compression, bending and tubing.

■ Select the appropriate piping tube.
- Use the CKD soft nylon tube and the urethane tube.
- Contact CKD regarding other fluorine resin tubes, etc.

■ Securely insert a tube into the push-in fitting before use.

■ When supplying compressed air after connecting pipes, do not suddenly apply high pressure.
- Connected piping could be dislocated and tubing could fly off.

■ Flush and clean the pipes before use.
- Dirt or foreign matter remaining in the piping will deteriorate product performance.

■ Air quality: Compressed air of JIS B 8392-1:2012 Class 1.3.1 is recommended.
- Use compressed air that does not contain oil oxides, tar, or carbon from the air compressor.
- Use CKD clean air system components appropriate for your application.

JIS B 8392-1:2012 Compressed air purity grade

Grade	Solid particle				Humidity and moisture		Oil
	Max No. of particles/m³ for particle ød (µm)			Mass conc Cp	Press dew point	Water conc Cw	Total oil conc
	0.1 < d ≤ 0.5	0.5 < d ≤ 1.0	1.0 < d ≤ 5.0	mg/m³	°C	g/m³	mg/m³
0	Conditions stricter than Grade 1 to be specified by user or supplier.						
1	≤ 20,000	≤ 400	≤ 10	-	≤ -70	-	≤ 0.01
2	≤ 400,000	≤ 6,000	≤ 100	-	≤ -40	-	≤ 0.1
3	-	≤ 90,000	≤ 1,000	-	≤ -20	-	≤ 1
4	-	-	≤ 10,000	-	≤ +3	-	≤ 5
5	-	-	≤ 100,000	-	≤ +7	-	-
6	-	-	-	0 < Cp ≤ 5	≤ +10	-	-
7	-	-	-	5 < Cp ≤ 10	-	Cw ≤ 0.5	-
8	-	-	-	-	-	0.5 < Cw ≤ 5	-
9	-	-	-	-	-	5 < Cw ≤ 10	-
X	-	-	-	Cp > 10	-	Cw > 10	> 5

JIS B 8392-1:2003 has been revised to JIS B 8392-1:2012.

For example,
What is Grade 1:2:1?
- Solid particles 0.1 to 0.5 µm are 20,000 particles or less, 0.5 to 1.0 µm are 400 particles or less, and 1.0 to 5.0 µm are 10 particles or less
- Pressure dew point -40°C or less
- Oil concentration 0.01 mg/m³ or less.

■ Do not move or swing the product by the adjustment knob, clean filter or pressure gauge on the regulator.
- Hold the body when carrying the product.

■ For detailed cautions, refer to the catalog for each piece of equipment.

2. Needle

⚠ CAUTION

■ Do not turn the knob forcibly when fully closing or opening it. Do not use the lock nut to adjust the needle. Otherwise this could cause needle galling or damage.

■ Check that lock nuts are not loose.

■ Check the rotation speed of the needle valve.
- The needle valve has dislocation prevention that could break or seize if the needle is turned too far. Check the number of turns for the product used.

■ Fully close the needle, and open to adjust speed.
- The needle closes when turned to the right and opens when turned to the left.

3. Air operated valve

⚠ CAUTION

■ Check the supply port on the pilot operation side when piping.

Model No.	Pilot operation side supply port
CAU30-*V1*	X
CAU30-*V3*	X and Y

■ Refer to the table below for tightening torque of the pilot air piping.

Piping nominal diameter	Recommended piping tightening torque (Nm)
Rc1/8	7 to 9

■ Grease is applied to the pilot valve.
Make sure there is an exhaust port for pilot air when using the single acting in a clean room.

4. Pressure gauge

⚠ CAUTION

■ Repeated and sudden increases or decreases in pressure and pressure pulsations must be avoided as they could adversely affect the life of the pressure gauge.

* For precautions on the digital pressure sensor (PPX-R10N-6M-P12), refer to CKD “Pneumatic, Vacuum, and Auxiliary Components” (CB-024SA).

Use/maintenance

1. Common

⚠ WARNING

■ Use this product under the max. working pressure and max. operating pressure differential.

⚠ CAUTION

■ Carefully read the instruction manual before starting use and maintenance.

■ Before conducting maintenance, stop the supply of the fluid and make sure that there is no residual pressure.

■ Do not disassemble or modify the product.

■ Do not use the product as footing or place any heavy objects on top of the product.

■ Storage

- Do not store this product in a hot, humid atmosphere or atmospheric conditions outside of the specified range for a prolonged period of time. Storing the product in such an environment can result in deterioration of the resin and rubber.
- Consult with CKD for storage outside the specified range.

■ For detailed cautions, refer to the catalog for each piece of equipment.

2. Air operated valve

⚠ WARNING

■ To ensure ideal use, inspect the product every six months. This frequency varies with the frequency of use.

⚠ CAUTION

■ If the product has been out of use for one month or more, perform a test run before starting the actual operation.

■ Pilot air pressure

Use the product with a pilot air pressure in the specified range.

3. Inline clean filter

⚠ WARNING

■ Prevent the generated ozone from passing through the filter. Otherwise the filter element may be degraded. Take care especially when using an ozone generator (e.g., ionizer) together.

(1) Do not install it upstream of the filter.
(2) When installing downstream of the filter, stop air while static electricity is neutralized since generated ozone may flow back.

■ Check the filter periodically and replace if necessary.

⚠ CAUTION

■ As a clogged filter element may cause degradation of performance, perform periodical inspection and replacement of the element.

■ Perform periodical inspection to check for cracks, scratches and other degradation of the transparent resin parts.

- Replace with a new product if you find any damage.

* For precautions on the digital pressure sensor (PPX-R10N-6M-P12), refer to CKD “Pneumatic, Vacuum, and Auxiliary Components” (CB-024SA).

Air unit

CXU

■ Air unit components

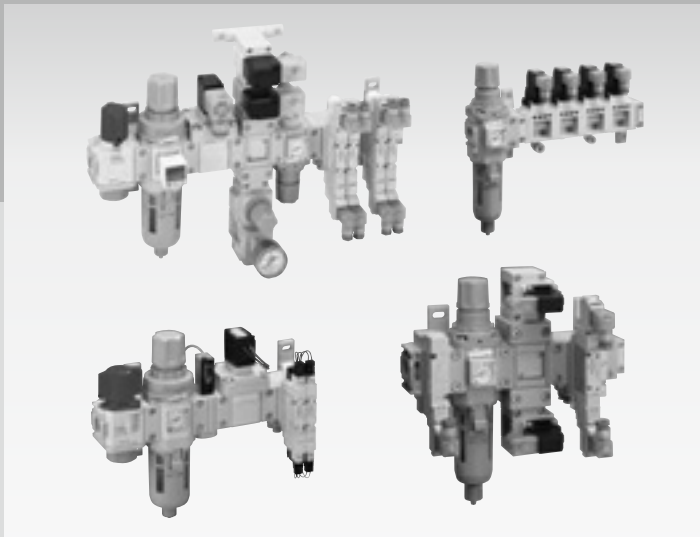

Overview

Air units consist of modularized and integrated various air components which are necessary for pneumatic control and actuator drive between filter/ regulators and valves.
The conventional design and piping processes will be dramatically changed.

CONTENTS

Product introduction	948
● Customized Air Unit (Customized combinations)	953
● Air Unit Customized Products	1005
● Valve air unit	1007
● Single air unit	1017
⚠ Safety precautions	1048

Next-generation pneumatic unit

Piping is not necessary. No complicated work. Flexible combination

Various parts are available for your desired combination including customized specifications.



Pilot operated 2-port solenoid valve
[For blow valve, etc.]



Direct acting 2-port solenoid valve
[For blow valve, etc.]

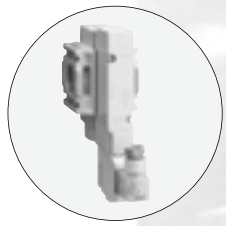

Shut-off 3-port solenoid valve
[For modular component master valve]



Pilot kick 2-port solenoid valve
[For main ON/OFF valves, etc.]

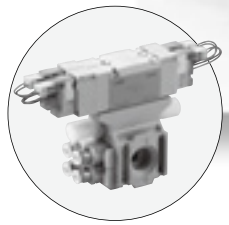

Pilot operated 5-port valve/pilot
[Actuator drive]



Module check valve
[Reverse flow prevention]

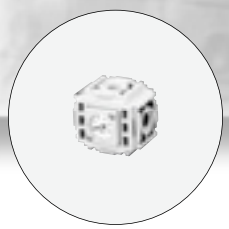

4-way distributor
[For branching a line]

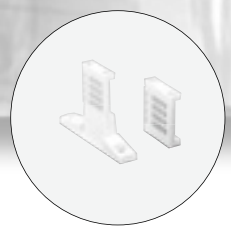

Masking adaptor
[For masking a connection]

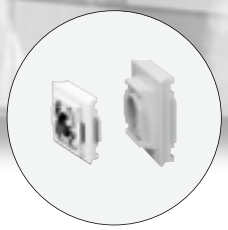

Module conversion adaptor
[For adopting another series]

Capable of connecting 1000 Series with 3000 Series and 4000 Series with 8000 Series

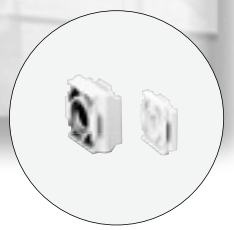

Turn adaptor
[90° rotatable]

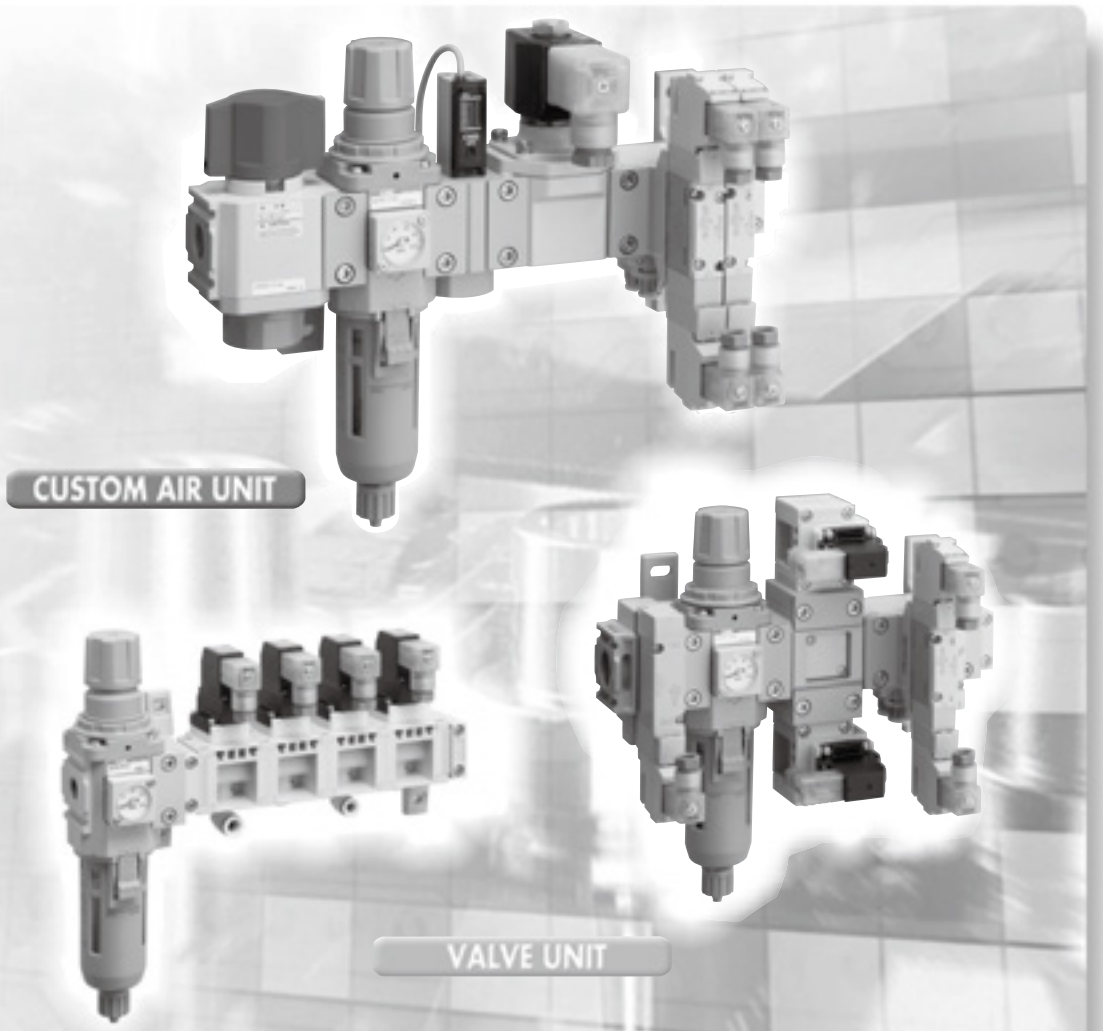

PART

Air unit

CXU Series

CKD

The Air Unit CXU Series modularizes and unites various air components essential to pneumatic control and actuator drive, from filter regulators to valves.
The number of processes for design and piping has been dramatically reduced.

Piping is not necessary/no complicated work

Space saving without piping

No complicated pipe design or pipework. Just order a single unit.
There is no tedious and time consuming installation of components, no need to follow complicated piping designs.
Everything comes preinstalled.
Without most of the piping, the device not only looks well-organized, but also saves space.

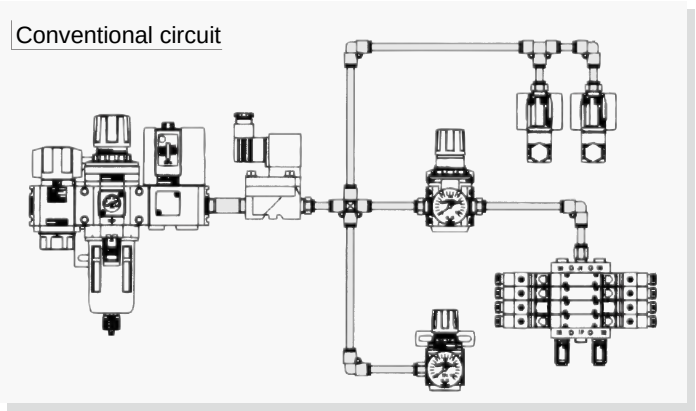

High quality

There are no screw-in parts and so there are no worries about external leakage.
Entry of foreign matter during piping can be prevented.

Flexible combination

Unrestricted in vertical/horizontal directions

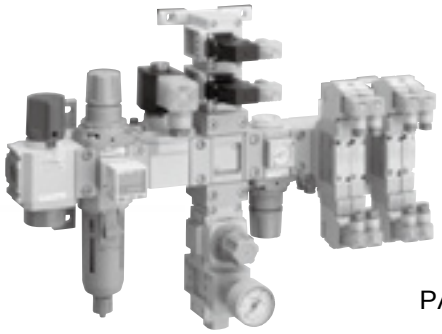

PAT.

Vertical and horizontal piping can be changed flexibly.
Direct connection of solenoid valve is possible.
Easy layout and reduced piping design work.
(Made to order AIR UNIT)

Flexible change and expansion

Modular connection enables flexible exchange and expansion of pneumatic components.
The units can be attached/detached from the front of the equipment.
Maintenance is very easy.

■ Applications

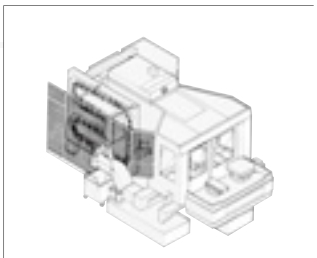
● Machine tools

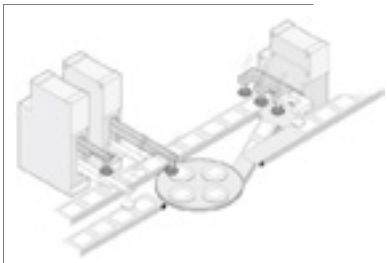
● Assembly/transport

Customized air unit (customized combinations)

Model	Model No.	Series 1000	Series 2000 3000 4000	Page
CXU10 Series	CXU10-UN-	●		956, 957
CXU13 Series	CXU13-UN-	●		962, 963
CXU30 Series	CXU30-UN-		●	958 to 961

Air Unit Customized Products

Model	Model No.	Series 1000	Series 2000 3000 4000	Page
Air Unit Customized Products	CXUZ-FL	●	●	1005

Valve air unit

Model	Model No.	Series 1000	Series 2000 3000 4000	Page
Pilot operated 2-port solenoid valve	CXU10-GEXA	●		1008
Pilot operated 5-port valve	CXU30-M4G2R		●	1012

Single air unit

Model	Model No.	Series			Page
		1000	2000 3000 4000	6000 8000	
Module residual pressure exhaust valve	CXU30-VE		●		1020
Pilot operated 2-port solenoid valve	CXU10-EXA	●			1026
Direct acting 2-port solenoid valve	CXU10-FAB3	●			1028
	CXU30-FAB4U		●		1030
Pilot kick 2-port solenoid valve	CXU30-ADK		●		1032
Pilot operated 5-port valve	CXU30-4G2R		●		1034
Module check valve	CXU10-CHV	●			1040
4-way distributor	CXU10-D4	●			1042
	CXU30-D4		●		1042
Turn adaptor	CXU10-TA	●			1044
	CXU30-TA		●		1044
Masking adaptor	CXU10-MA	●			1045
Module conversion adaptor	CXU13-CA	●			1046
	CXU48-CA		●		

MEMO

Customized air unit
Customized combinations

Overview

Complex pneumatic components can be configured by purchasing customized units.
Work such as piping is eliminated, enabling the unit to be used immediately.

Features

(1) Flexible combinations
Flexible layouts reduce the man-hours required for design.

(2) Simplified order placement
Units can be purchased using only one form, making order placement and delivery management easy.

(3) Reduced man-hours
FR components and solenoid valves are connected as a module, eliminating work such as piping.

(4) Space saving
Piping free and fitting free simple design. Compact design that fits into confined spaces.

(5) Front access
Units can be easily mounted/removed and added from the front. The maintenance operation is simple as well.

Descriptions of icons

Customized only

(1) Dedicated model No. for customized combinations
Model No. containing “-UN” are used exclusively for customized combinations.
Components cannot be purchased individually.

Interface 56 mm

(2) Interface dimensions
Interface dimensions are shown in icons.

Screwless open type

(3) Cannot be used at terminals
Since no connection screw is provided, a masking adaptor or pipe adaptor is required for use at terminals.

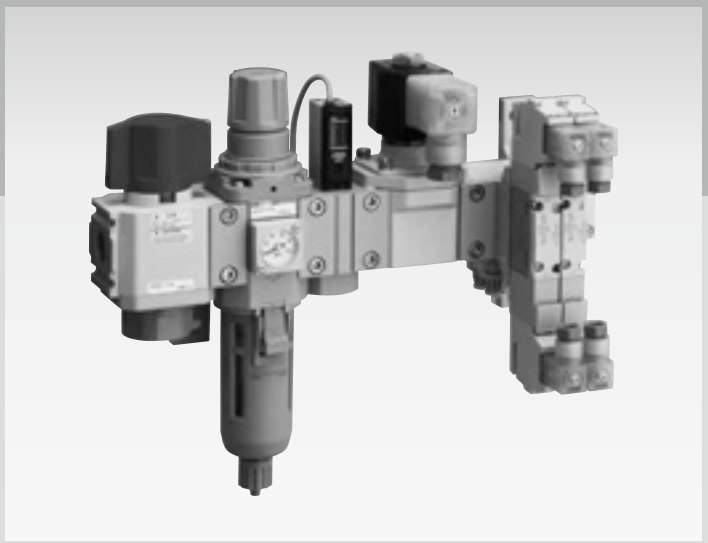

CONTENTS

[F.R.L. components, solenoid valve]
- Filter/regulator
- Reverse filter/regulator
- Air filter
- Oil mist filter
- High-performance oil mist filter
- Regulator
- Reverse regulator
- Lubricator
- Drain separator
- Mechanical pressure switch
- Residual pressure exhaust valve
- Slow start valve
- Residual pressure exhaust 3-port solenoid valve
- Direct acting 2-port solenoid valve
- Pilot operated 2-port solenoid valve
- Pilot kick 2-port solenoid valve
- Pilot operated 5-port valve

[Distributor, adaptor]
- Module check valve
- Distributor
- Turn adaptor
- Pipe adaptor
- L type pipe adaptor
- Masking adaptor
- Module conversion adaptor

[Joiner, bracket]
- Joiner
- T type bracket

Series variation

Customized air unit

[F.R.L. components]

Series	Model No.	Module			Port size (OUT)									Page
		1000 Series	3000 Series	8000 Series	ø4	ø6	ø8	1/8	1/4	3/8	1/2	3/4	1	
● Filter/regulator 	W1000	●						●	●					964
	W2000		●						●	●				
	W3000		●						●	●	●			
	W4000		●						●	●	●			
	W8000			●								●	●	
● Reverse filter/regulator 	W1100	●						●	●					966
	W2100		●						●	●				
	W3100		●						●	●				
	W4100		●						●	●	●			
	W8100			●								●	●	
● Air filter 	F1000	●						●	●					968
	F2000		●						●	●				
	F3000		●						●	●				
	F4000		●						●	●	●			
	F6000			●								●	●	
	F8000			●								●	●	
● Oil mist filter 	M1000	●						●	●					970
	M2000		●						●	●				
	M3000		●						●	●				
	M4000		●						●	●	●			
	M6000			●								●	●	
	M8000			●								●	●	
● High-performance oil mist filter 	MX1000	●						●	●					972
	MX3000		●						●	●				
	MX4000		●						●	●	●			
	MX6000			●								●	●	
	MX8000			●								●	●	
● Regulator 	R1000	●						●	●					974
	R2000		●						●	●				
	R3000		●						●	●				
	R4000		●						●	●	●			
	R6000			●								●	●	
	R8000			●								●	●	
● Reverse regulator 	R1100	●						●	●					976
	R2100		●						●	●				
	R3100		●						●	●				
	R4100		●						●	●	●			
	R6100			●								●	●	
	R8100			●								●	●	
● Lubricator 	L1000	●						●	●					978
	L3000		●						●	●				
	L4000		●						●	●	●			
	L8000			●								●	●	
● Drain separator 	FX1004		●						●	●				979
	FX1011		●						●	●	●			
	FX1037			●								●	●	
● Mechanical pressure switch 	P4000		●						●	●	●			981
	P1100-UN	●						●	●					982
	P4100-UN		●						●	●	●			
	P8100-UN			●								●	●	
● Residual pressure exhaust valve 	V1000	●						●	●					984
	V3000		●						●	●	●			
	V3010		●						●	●	●			985
	V6010			●								●	●	
● Slow start valve 	V3301		●						●	●	●			986
	V3321		●						●	●	●			

[Solenoid valve]

Series	Model No.	Module			Port size (OUT)								Page
		1000 Series	3000 Series	8000 Series	ø4	ø6	ø8	1/8	1/4	3/8	1/2	3/4	1	
● Shut-off 3-port solenoid valve 	CXU30-VE-UN		●											987
● Pilot operated 2-port solenoid valve 	CXU10-EXA-UN	●				●	●							990
● Direct acting 2-port solenoid valve 	CXU10-FAB3-UN	●				●	●							991
	CXU30-FAB4U-UN		●						●					992
● Pilot kick 2-port solenoid valve 	CXU30-ADK-UN		●											993
● Pilot operated 5-port valve 	CXU30-4G2R-UN		●		●	●	●							994

[Distributor, adaptor]

Series	Model No.	Module			Port size (OUT)							Page
		1000 Series	3000 Series	8000 Series	ø6	ø8	1/8	1/4	3/8	1/2	3/4	1	
● Module check valve 	CXU10-CHV-UN	●											997
● Distributor 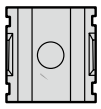	D101-UN	●					●	●					998
	D401-UN		●					●	●	●			
	D801-UN			●							●	●	
	D300		●					●	●				
● Turn adaptor 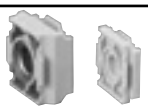	CXU10-TA-UN	●											999
	CXU30-TA-UN		●										
● Pipe adaptor 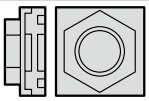	A100-UN	●					●	●	●				1000
	A400-UN		●					●	●	●			
	A800-UN			●							●	●	
● L type pipe adaptor 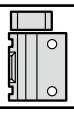	A101-UN	●					●	●					1000
	A401-UN		●					●	●	●			
	A801-UN			●							●	●	
● Masking adaptor 	CXU10-MA-UN	●											1001
	CXU30-MA-UN		●										
● Module conversion adaptor 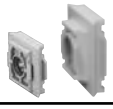	CXU13-CA-UN		●										1002
	CXU48-CA-UN			●									

[Joiner, bracket]

Series	Model No.	Module			Height to pipe center				Page
		1000 Series	3000 Series	8000 Series	40	45	55	65	
● T type bracket set 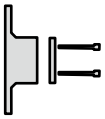 Note: T type bracket sets of different heights cannot be combined.	B110-UN	●			●				1003
	B110-UN-H	●				●			
	B310-UN		●			●			
	B410-UN		●				●		
	B810-UN			●				●	
● Joiner 	C1000-J100-UN	●							1003
	C4000-J400-UN		●						
	C8000-J800-UN			●					

Example of CXU10 Series customized combination specifications sheet 1000 Series base

Overview

Customized combination is a customer-oriented service meeting various combination needs for each user. Complete the following specifications sheet before placing an order.
Additional models such as solenoid valves, etc., are available as well as conventional customized combinations.

How to complete customized combination specifications sheet

(1) Indicate the full model No. in the model No. field for the required part.
(2) Place a "○" to indicate the installation position, and designate "Up" or "Down" for the direction of the required part.
(3) Indicate "○" in the bracket and joiner fields.

- Refer to each section in this catalog by configuration for "How to order" and descriptions, etc.
- Only the FRL Standard White Series and air unit components (CXU) can be selected.
- If air unit components (CXU) are not included, use the C*000 specifications.

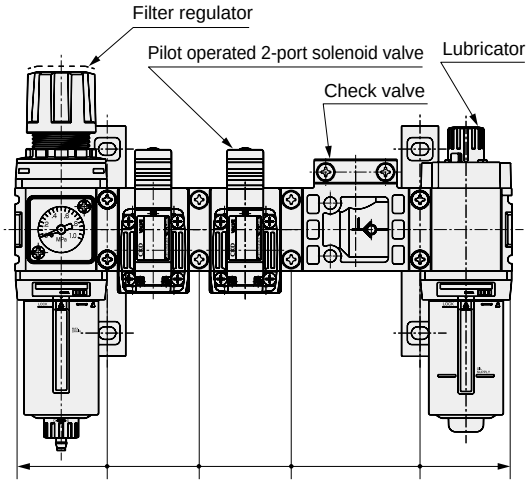

Dimensions are calculated by totaling the face-to-face dimensions of each component.
The bracket mounting position can also be calculated.

CXU10 Series customized combination specifications sheet 1000 Series base

Contact
Slip No.
Quantity set (s)
Delivery date /
Date issued / /
Company
Contact
Order No.

● Model No.
CXU10 ─ UN ─ ○ ─ ●

Leave it blank.
It is used by CKD for your control No.

Flow direction	
Blank	Left → Right
X1	Right → Left

Designate the direction of compressed air flow as seen from the front.
Do not write anything when "blank" is selected.

For products with the ★ mark, indicate up or down.
For regulator, indicate up/down for knob and other port directions.

Indicate the installation position from the left when seen from the front.

Part name	Interface dimensions	Model No.	Direction	Installation position								Technical use field
Filter regulator	40	W1000-8-W		○								
		W1100- -W										
Air filter	40	F1000- -W										
Oil mist filter	40	M1000- -W										
High-performance oil mist filter	40	MX1000- -W										
Regulator ★	40	R1000- -W										
	40	R1100- -W										
Lubricator	40	L1000-8-W						○				
Pressure switch	28	P1100-UN- -W		*2							*2	
Residual pressure exhaust valve	40	V1000- -W										
Pilot operated 2-port solenoid valve	40	CXU10-EXA-UN-CL8-2HS-3		*2	○	○					*2	
Direct acting 2-port solenoid valve	40	CXU10-FAB3-UN-		*2							*2	
		CXU10-FAB3-UN-		*2							*2	
Module check valve ★	56	CXU10-CHV-UN-00-MA		*2			○				*2	
Distributor ★	28	D101-UN-00-W		*2							*2	
Turn adapter	10	CXU10-TA-UN-00										
Piping adapter	21.5	A100-UN- -W										
L-type piping adapter ★	28	A101-UN- -W										
Masking adapter	10	CXU10-MA-UN-00										

One piping adapter is included. Properly indicate the required quantities.

Please fill in this field when using different products such as options, bore sizes, etc.

T type bracket set	*1	B110-UN-W		○			○				
T type bracket set	*2	B110-H-UN-W									
Joiner set		C1000-J100-UN-W			○	○					

Use the T-brackets at regular intervals. When the T-bracket uses a single end for support, up to three stations can be used. When it is supported on both ends, up to five stations can be used.
Only the indicated T-bracket is available.

*1: The distance from pipe center to the mounting surface is 40 mm.
*2: The distance from pipe center to the mounting surface is 45 mm.
*3: When using a product at the end of the combination, use a piping adapter (A100-UN, A101-UN) or masking adapter (CXU10-MA) at its end. (The horizontal direction port does not have threads.)

Technical Comment Field	

Approval	Inspection	Contact
	●	

Leave it blank.
It is used by CKD when confirming your order.

CXU10 Series customized combination specifications sheet

1000 Series base

Contact _____ Quantity _____ Set
Slip No. _____ Delivery date / /

Issued / /
Your company name _____
Contact _____
Order No. _____

● Model No.

CXU10 — UN — ( ) — ( )

Flow direction	
Blank	Left → Right
X1	Right → Left

For products with the ★ mark, indicate up or down.
For regulator, indicate up/down for knob and other port directions.

Indicate the installation position from the left when seen from the front.

Part name	Interface dimensions	Model No.	Direction	Installation position								Technical use field
Filter/regulator	40	W1000- -W										
		W1100- -W										
Air filter	40	F1000- -W										
Oil mist filter	40	M1000- -W										
High-performance oil mist filter	40	MX1000- -W										
Regulator ★	40	R1000- -W										
	40	R1100- -W										
Lubricator	40	L1000- -W										
Pressure switch	28	P1100-UN- -W		*2							*2	
Residual pressure exhaust valve	40	V1000- -W										
Pilot operated 2-port solenoid valve	40	CXU10-EXA-UN-		*2							*2	
Direct acting 2-port solenoid valve	40	CXU10-FAB3-UN-		*2							*2	
		CXU10-FAB3-UN-		*2							*2	
Module check valve ★	56	CXU10-CHV-UN-00		*2							*2	
Distributor ★	28	D101-UN-00-W		*2							*2	
Turn adaptor	10	CXU10-TA-UN-00										
Pipe adaptor	21.5	A100-UN- -W										
L type pipe adaptor ★	28	A101-UN- -W										
Masking adaptor	10	CXU10-MA-UN-00										

T type bracket set	*1	B110-UN-W										
T type bracket set	*2	B110-H-UN-W										
Joiner set		C1000-J100-UN-W										

*1: The distance from pipe center to the mounting surface is 40 mm.
*2: The distance from pipe center to the mounting surface is 45 mm.
*3: When using a product at the end of the combination, a pipe adaptor (A100-UN, A101-UN) or masking adaptor (CXU10-MA) shall be used at its end. (The horizontal direction port does not have threads.)

Technical Comment Field	

Approval	Inspection	Contact

Example of CXU30 Series customized combination specifications sheet 2000, 3000 Series base

Overview

Customized combination is a customer-oriented service meeting various combination needs for each user. Complete the following specifications sheet before placing an order.
Additional models such as solenoid valves, etc., are available as well as conventional customized combinations.

How to complete customized combination specifications sheet

(1) Indicate the full model No. in the model No. field for the required part.
(2) Place a "○" to indicate the installation position, and designate "Up" or "Down" for the direction of the required part.
(3) Indicate "○" in the bracket and joiner fields.

- Refer to each section in this catalog by configuration for "How to order" and descriptions, etc.
- Only the FRL Standard White Series and air unit components (CXU) can be selected.
- If air unit components (CXU) are not included, use the C*000 specifications.

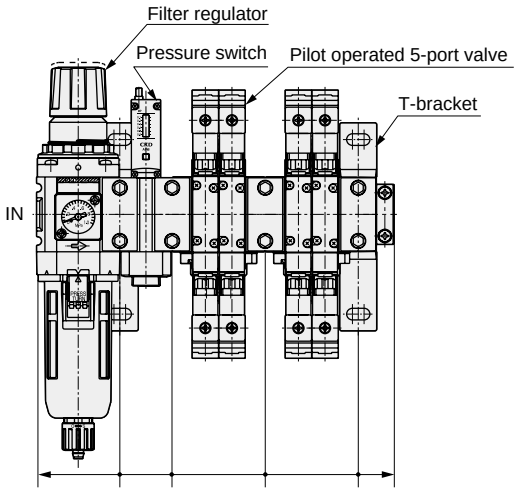

Dimensions are calculated by totaling the face-to-face dimensions of each component.
The bracket mounting position can also be calculated.

CXU30 Series customized combination specifications sheet 2000, 3000 Series base

Contact
Slip No.
Quantity set (s)
Delivery date /
Date issued / /
Company
Contact
Order No.

● Model No.
CXU30 ─ UN ─ ○ ─ ＿＿＿＿

Leave it blank.
It is used by CKD for your control No.

Flow direction	
Blank	Left → Right
X1	Right → Left

Designate the direction of compressed air flow as seen from the front.
Do not write anything when "blank" is selected.

For products with the ★ mark, indicate up or down.
For regulator, indicate up/down for knob and other port directions.

Indicate the installation position from the left when seen from the front.

Part name	Interface dimensions	Model No.	Direction	Installation position								Technical use field
Filter regulator	50	W2000-10-W-		○								
		W2100- -W										
	63	W3000- -W										
		W3100- -W										
Air filter	50	F2000- -W										
	63	F3000- -W										
Oil mist filter	50	M2000-- -W										
	63	M3000- -W										
High-performance oil mist filter	63	MX3000- -W										
Regulator ★	50	R2000- -W										
		R2100- -W										
	63	R3000- -W										
		R3100- -W										
Lubricator	63	L3000- -W										
Drain separator	63	FX1004- -W										
Pressure switch	80	P4000- -W										
	31.5	P4100-UN-10-W		*2	○						*2	
Residual pressure exhaust valve	63	V3000-10-W-S										
		V3010- -W-										
Residual pressure exhaust 3-port solenoid valve	45	CXU30-VE-UN-00										
Slow start valve	63	V3301- -W-										
		V3321- -W-										
Direct acting 2-port solenoid valve	50	CXU30-FAB4U-UN-8L-		*2							*2	
Pilot kick 2-port solenoid valve	63	CXU30-ADK-UN-00-		*2							*2	
Pilot operated 5-port valve	56	CXU30-4G2R-UN-33-C8-BS-3		*2		○	○				*2	
		CXU30-4G2R-UN-										
Distributor ★	31.5	D401-UN-00- -W		*2							*2	
Distributor	42	D300- -W										
Turn adapter	22.5	CXU30-TA-UN-00										
Piping adapter	*3	A400-UN- -W										
L-type piping adapter★	31.5	A401-UN- -W										
Masking adapter	21.5	CXU30-MA-UN-00						○				

T type bracket set	*1	B310-UN-W		○				○			
Joiner set		C4000-J400-UN-W			○	○			○		

Use the pilot operated 5-port valve with up to three stations.

One piping adapter is included. Properly indicate the required quantities.

Please fill in this field when using different products such as options, bore sizes, etc.

Use the T-brackets at regular intervals. When the T-bracket uses a single end for support, up to three stations can be used. When it is supported on both ends, up to five stations can be used.
Only the indicated T-bracket is available.

*1: The distance from pipe center to the mounting surface is 45 mm.
*2: When using a product at the end of the combination, use a piping adapter (A400-UN, A401-UN) or masking adapter (CXU30-MA) at its end. (The horizontal direction port does not have threads.)
*3: 20 mm for port sizes 8, 10 and 15, and 25 mm for port size 20.

Technical Comment Field	

Approval	Inspection	Contact

Leave it blank.
It is used by CKD when confirming your order.

CXU30 Series customized combination specifications sheet

2000, 3000 Series base

Contact
Slip No.
Quantity Set
Delivery date /
Issued / /
Your company name
Contact
Order No.

● Model No.

CXU30 — UN — ( ) — ( )

Flow direction	
Blank	Left → Right
X1	Right → Left

For products with the ★ mark, indicate up or down.
For regulator, indicate up/down for knob and other port directions.

Indicate the installation position from the left when seen from the front.

Part name	Interface dimensions	Model No.	Direction	Installation position								Technical use field
Filter/regulator	50	W2000- -W										
		W2100- -W										
	63	W3000- -W										
		W3100- -W										
Air filter	50	F2000- -W										
	63	F3000- -W										
Oil mist filter	50	M2000- -W										
	63	M3000- -W										
High-performance oil mist filter	63	MX3000- -W										
Regulator ★	50	R2000- -W										
		R2100- -W										
	63	R3000- -W										
		R3100- -W										
Lubricator	63	L3000- -W										
Drain separator	63	FX1004- -W										
Pressure switch	80	P4000- -W										
	31.5	P4100-UN- -W		*2							*2	
Residual pressure exhaust valve	63	V3000- -W										
		V3010- -W										
Residual pressure exhaust 3-port solenoid valve	45	CXU30-VE-UN-00										
Slow start valve	63	V3301- -W-										
		V3321- -W-										
Direct acting 2-port solenoid valve	50	CXU30-FAB4U-UN-8L-		*2							*2	
Pilot kick 2-port solenoid valve	63	CXU30-ADK-UN-00-		*2							*2	
Pilot operated 5-port valve	56	CXU30-4G2R-UN-		*2							*2	
		CXU30-4G2R-UN-										
Distributor ★	31.5	D401-UN-00- -W		*2							*2	
Distributor	42	D300- -W										
Turn adaptor	22.5	CXU30-TA-UN-00										
Pipe adaptor	*3	A400-UN- -W										
L type pipe adaptor ★	31.5	A401-UN- -W										
Masking adaptor	21.5	CXU30-MA-UN-00										

T type bracket set	*1	B310-UN-W										
Joiner set		C4000-J400-UN-W										

*1: The distance from pipe center to the mounting surface is 45 mm.
*2: When using a product at the end of the combination, a pipe adaptor (A400-UN, A401-UN) or masking adaptor (CXU30-MA) shall be used at its end. (The horizontal direction port does not have threads.)
*3: 20 mm for port sizes 8, 10 and 15, and 25 mm for port size 20.

Technical Comment Field	

Approval	Inspection	Contact

Example of CXU30 Series customized combination specifications sheet 4000 Series base

Overview

Customized combination is a customer-oriented service meeting various combination needs for each user. Complete the following specifications sheet before placing an order.
Additional models such as solenoid valves, etc., are available as well as conventional customized combinations.

How to complete customized combination specifications sheet

(1) Indicate the full model No. in the model No. field for the required part.
(2) Place a "○" to indicate the installation position, and designate "Up" or "Down" for the direction of the required part.
(3) Indicate "○" in the bracket and joiner fields.

- Refer to each section in this catalog by configuration for "How to order" and descriptions, etc.
- Only the FRL Standard White Series and air unit components (CXU) can be selected.
- If air unit components (CXU) are not included, use the C*000 specifications.

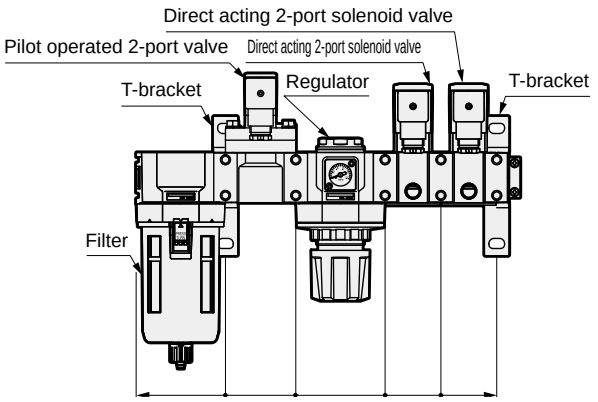

Dimensions are calculated by totaling the face-to-face dimensions of each component.
The bracket mounting position can also be calculated.

CXU30 Series customized combination specifications sheet 4000 Series base

Contact
Slip No.
Quantity set (s)
Delivery date /
Date issued / /
Company
Contact
Order No.

● Model No.
CXU30 — UN — ( ) — ( )

Leave it blank.
It is used by CKD for your control No.

Flow direction	
Blank	Left → Right
X1	Right → Left

Designate the direction of compressed air flow as seen from the front.
Do not write anything when "blank" is selected.

For products with the ★ mark, indicate up or down.
For the regulator's knob direction, indicate up/down, and the port up/down for other components.

Indicate the installation position in order from the left as seen from the front.

Part name	Interface dimensions	Model No.	Direction	Installation position								Technical use field
Filter regulator	63	W3000- -W										
		W3100- -W										
	80	W4000- -W										
		W4100- -W										
Air filter	63	F3000- -W										
	80	F4000-15-W		○								
Oil mist filter	63	M3000- -W										
	80	M4000- -W										
High-performance oil mist filter	63	MX3000- -W										
	80	MX4000- -W										
Regulator ★	63	R3000-- -W										
		R3100- -W										
	80	R4000-15-W	Down			○						
		R4100- -W										
Lubricator	63	L3000- -W										
	80	L4000- -W										
Drain separator	63	FX1004- -W										
	80	FX1011- -W										
Pressure switch	80	P4000- -W										
	31.5	P4100-UN- -W		*2							*2	
Residual pressure exhaust valve	63	V3000- -W										
		V3010- -W										
Residual pressure exhaust 3-port solenoid valve	45	CXU30-VE-UN-00										
Slow start valve	63	V3301- -W-										
		V3321- -W-										
Direct acting 2-port solenoid valve	50	CXU30-FAB4U-UN-8L-2HS-3		*2			○	○			*2	
Pilot kick 2-port solenoid valve	63	CXU30-ADK-UN-00-2HS-3		*2	○						*2	
Pilot operated 5-port valve	56	CXU30-4G2R-UN-		*2							*2	
		CXU30-4G2R-UN-										
Distributor ★	31.5	D401-UN-00- -W		*2							*2	
Distributor	42	D300- -W										
Turn adapter	22.5	CXU30-TA-UN-00										
Piping adapter	*3	A400-UN- -W										
L-type piping adapter★	31.5	A401-UN- -W										
Masking adapter	21.5	CXU30-MA-UN-00							○			
T type bracket set	*1	B410-UN-W		○					○			
Joiner set		C4000-J400-UN-W			○	○	○					

Use the pilot operated 5-port valve with up to three stations.

One piping adapter is included. Properly indicate the required quantities.

Please fill in this field when using different products such as options, bore sizes, etc.

Use the T-brackets at regular intervals. When the T-bracket uses a single end for support, up to three stations can be used. When it is supported on both ends, up to five stations can be used.
Only the indicated T-bracket is available.

*1: The distance from pipe center to the mounting surface is 55 mm.
*2: When using a product at the end of the combination, use a piping adapter (A400-UN, A401-UN) or masking adapter (CXU30-MA) at its end. (The horizontal direction port does not have threads.)
*3: 20 mm for port sizes 8, 10 and 15, and 25 mm for port size 20.

Technical Comment Field	

Approval	Inspection	Contact

Leave it blank.
It is used by CKD when confirming your order.

CXU30 Series customized combination specifications sheet

4000 Series base

Contact
Slip No.
Quantity Set
Delivery date /
Issued / /
Your company name
Contact
Order No.

● Model No.

CXU30 — UN — ( ) — ( )

Flow direction	
Blank	Left → Right
X1	Right → Left

For products with the ★ mark, indicate up or down.
For regulator, indicate up/down for knob and other port directions.

Indicate the installation position from the left when seen from the front.

Part name	Interface dimensions	Model No.	Direction	Installation position								Technical use field
Filter/regulator	63	W3000- -W										
		W3100- -W										
	80	W4000- -W										
		W4100- -W										
Air filter	63	F3000- -W										
	80	F4000- -W										
Oil mist filter	63	M3000- -W										
	80	M4000- -W										
High-performance oil mist filter	63	MX3000- -W										
	80	MX4000- -W										
Regulator ★	63	R3000- -W										
		R3100- -W										
	80	R4000- -W										
		R4100- -W										
Lubricator	63	L3000- -W										
	80	L4000- -W										
Drain separator	63	FX1004- -W										
	80	FX1011- -W										
Pressure switch	80	P4000- -W										
	31.5	P4100-UN- -W		*2							*2	
Residual pressure exhaust valve	63	V3000- -W										
		V3010- -W										
Residual pressure exhaust 3-port solenoid valve	45	CXU30-VE-UN-00										
Slow start valve	63	V3301- -W-										
		V3321- -W-										
Direct acting 2-port solenoid valve	50	CXU30-FAB4U-UN-8L-		*2							*2	
Pilot kick 2-port solenoid valve	63	CXU30-ADK-UN-00-		*2							*2	
Pilot operated 5-port valve	56	CXU30-4G2R-UN-		*2							*2	
		CXU30-4G2R-UN-										
Distributor ★	31.5	D401-UN-00- -W		*2							*2	
Distributor	42	D300- -W										
Turn adaptor	22.5	CXU30-TA-UN-00										
Pipe adaptor	*3	A400-UN- -W										
L type pipe adaptor ★	31.5	A401-UN- -W										
Masking adaptor	21.5	CXU30-MA-UN-00										

T type bracket set	*1	B410-UN-W									
Joiner set		C4000-J400-UN-W									

*1: The distance from pipe center to the mounting surface is 55 mm.
*2: When using a product at the end of the combination, a pipe adaptor (A400-UN, A401-UN) or masking adaptor (CXU30-MA) shall be used at its end. (The horizontal direction port does not have threads.)
*3: 20 mm for port sizes 8, 10 and 15, and 25 mm for port size 20.

Technical Comment Field	

Approval	Inspection	Contact

Example of CXU13 Series customized combination specifications sheet 1000, 2000, 3000 Series mix

Overview

Customized combination is a customer-oriented service meeting various combination needs for each user. Complete the following specifications sheet before placing an order.
Additional models such as solenoid valves, etc., are available as well as conventional customized combinations.

How to complete customized combination specifications sheet

(1) Indicate the full model No. in the model No. field for the required part.
(2) Place a "○" to indicate the installation position, and designate "Up" or "Down" for the direction of the required part.
(3) Indicate "○" in the bracket and joiner fields.

- Refer to each section in this catalog by configuration for "How to order" and descriptions, etc.
- Only the FRL Standard White Series and air unit components (CXU) can be selected.
- If air unit components (CXU) are not included, use the C*000 specifications.

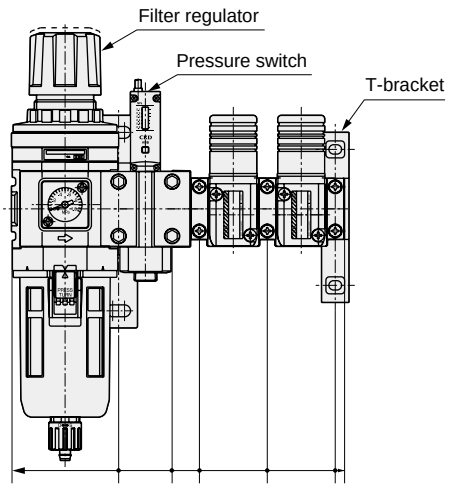

Dimensions are calculated by totaling the face-to-face dimensions of each component.
The bracket mounting position can also be calculated.

CXU13 Series customized combination specifications sheet **1000, 3000 Series mix**

Contact
Slip No.
Quantity set (s)
Delivery date /
Date issued / /
Company
Contact
Order No.

● Model No.
CXU13 — UN — ○ —

Leave it blank.
It is used by CKD for your control No.

Flow direction	
Blank	Left → Right
X1	Right → Left

Designate the direction of compressed air flow as seen from the front.
Do not write anything when "blank" is selected.

For products with the ★ mark, indicate up or down.
For regulator, indicate up/down for knob and other port directions.

Indicate the installation position from the left when seen from the front.

Part name	Interface dimensions	Model No.	Direction	Installation position								Technical use field
Filter regulator	40: 1000 50: 2000 63: 3000	W3000-10-W		○								
		W100- -W										
Air filter	40: 1000 50: 2000 63: 3000	F000- -W										
Oil mist filter	40: 1000 50: 2000 63: 3000	M000- -W										
High-performance oil mist filter	40	MX1000- -W										
	63	MX3000- -W										
Regulator	40: 1000 50: 2000 63: 3000	R000- -W										
		R100- -W										
Lubricator	40	L1000- -W										
	63	L3000- -W										
Drain separator	63	FX1004- -W										
Pressure switch	80	P4000- -W										
	28	P1100-UN- -W		*2							*2	
	31.5	P4100-UN-8-W		*2	○						*2	
Residual pressure exhaust valve	40	V1000- -W										
	63	V300- -W										
Residual pressure exhaust 3-port solenoid valve	45	CXU30-VE-UN-00										
Slow start valve	63	V3301- -W-										
		V3321- -W-										
Pilot operated 2-port solenoid valve	40	CXU10-EXA-UN-		*2							*2	
Direct acting 2-port solenoid valve	40	CXU10-FAB3-UN-C6-2HS-3		*2			○	○			*2	
Direct acting 2-port solenoid valve	50	CXU30-FAB4U-UN-8L-		*2							*2	
Pilot kick 2-port solenoid valve	63	CXU30-ADK-UN-00-		*2							*2	
Pilot operated 5-port valve	56	CXU30-4G2R-UN-		*2							*2	
		CXU30-4G2R-UN-										
Module check valve ★	56	CXU10-CHV-UN-00-		*2							*2	
Module conversion adapter	16	CXU13-CA-UN-00		*2		○					*2	
Distributor ★	28	D101-UN-00- -W		*2							*2	
	31.5	D401-UN-00- -W										
Distributor	42	D300- -W										
Turn adapter	10	CXU10-TA-UN-00										
	22.5	CXU30-TA-UN-00										
Piping adapter	21.5	A100-UN- -W										
	*3	A400-UN- -W										
L-type piping adapter ★	28	A101-UN- -W										
	31.5	A401-UN- -W										
Masking adapter	10	CXU10-MA-UN-00							○			
	21.5	CXU30-MA-UN-00										
T type bracket set	*1	B110-H-UN-W							○			
T type bracket set	*1	B310-UN-W			○							
Joiner set		C1000-J100-UN-W				○	○					
Joiner set		C4000-J400-UN-W			○							

4000 Series cannot be selected.
This is due to a height difference between B410-W and B110-H-W.

Use the pilot operated 5-port valve with up to three stations.

One piping adapter is included. Properly indicate the required quantities.

Use the T-brackets at regular intervals. When the T-bracket uses a single end for support, up to three stations can be used. When it is supported on both ends, up to five stations can be used.
Only the indicated T-bracket is available.

*1: The distance from pipe center to the mounting surface is 45 mm.
*2: When using a product at the end of the combination, use a piping adapter (A*00-UN, A*01-UN) or masking adapter (CXU*0-MA) at its end. (The horizontal direction port does not have threads.)
*3: 20 mm for port sizes 8, 10 and 15, and 25 mm for port size 20.

Technical Comment Field	

Approval	Inspection	Contact

Leave it blank.
It is used by CKD when confirming your order.

CXU13 Series customized combination specifications sheet

1000, 2000, 3000 Series mix

Contact
Slip No.
Quantity Set
Delivery date /
Issued / /
Your company name
Contact
Order No.

● Model No.

CXU13 — UN — ( ) — ( )

Flow direction	
Blank	Left → Right
X1	Right → Left

For products with the ★ mark, indicate up or down.
For regulator, indicate up/down for knob and other port directions.

Indicate the installation position from the left when seen from the front.

Part name	Interface dimensions	Model No.	Direction	Installation position								Technical use field
Filter/regulator	40:1000 50:2000 63:3000	W 000- -W										
		W 100- -W										
Air filter	40:1000 50:2000 63:3000	F 000- -W										
Oil mist filter	40:1000 50:2000 63:3000	M 000- -W										
High-performance oil mist filter	40	MX1000- -W										
	63	MX3000- -W										
Regulator	40:1000 50:2000 63:3000	R 000- -W										
		R 100- -W										
Lubricator	40	L1000- -W										
	63	L3000- -W										
Drain separator	63	FX1004- -W										
Pressure switch	80	P4000- -W										
	28	P1100-UN- -W		*2							*2	
	31.5	P4100-UN- -W										
Residual pressure exhaust valve	40	V1000- -W										
	63	V3000- -W										
Residual pressure exhaust 3-port solenoid valve	45	CXU30-VE-UN-00										
Slow start valve	63	V3301- -W-										
		V3321- -W-										
Pilot operated 2-port solenoid valve	40	CXU10-EXA-UN-		*2							*2	
Direct acting 2-port solenoid valve	40	CXU10-FAB3-UN-		*2							*2	
Direct acting 2-port solenoid valve	50	CXU30-FAB4U-UN-8L-		*2							*2	
Pilot kick 2-port solenoid valve	63	CXU30-ADK-UN-00-		*2							*2	
Pilot operated 5-port valve	56	CXU30-4G2R-UN-		*2							*2	
		CXU30-4G2R-UN-										
Module check valve ★	56	CXU10-CHV-UN-00		*2							*2	
Module conversion adaptor	16	CXU13-CA-UN-00		*2							*2	
Distributor ★	28	D101-UN-00- -W		*2							*2	
	31.5	D401-UN-00- -W										
Distributor	42	D300- -W										
Turn adaptor	10	CXU10-TA-UN-00										
	22.5	CXU30-TA-UN-00										
Pipe adaptor	21.5	A100-UN- -W										
	*3	A400-UN- -W										
L type pipe adaptor ★	28	A101-UN- -W										
	31.5	A401-UN- -W										
Masking adaptor	10	CXU10-MA-UN-00										
	21.5	CXU30-MA-UN-00										

T type bracket set	*1	B110-H-UN-W									
T type bracket set	*1	B310-UN-W									
Joiner set		C1000-J100-UN-W									
Joiner set		C4000-J400-UN-W									

*1: The distance from pipe center to the mounting surface is 45 mm.
*2: When using a product at the end of the combination, a pipe adaptor (A*00-UN, A*01-UN) or masking adaptor (CXU*0-MA) shall be used at its end. (The horizontal direction port does not have threads.)
*3: 20 mm for port sizes 8, 10 and 15, and 25 mm for port size 20.

Technical Comment Field	

Approval	Inspection	Contact



Filter/regulator Standard White Series

W1000/W2000/W3000/W4000/W8000-W Series

New Series of 5 µm element for dust removal, and 0.3 µm element for tar removal.

Port size: Rc1/8 to Rc1

JIS symbol 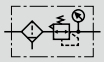

W1000 Interface 40 mm | W2000 Interface 50 mm | W3000 Interface 63 mm | W4000 Interface 80 mm | W8000 Interface 100 mm

RoHS CAD

How to order

W3000 - 8 - W - Z - (White type)

Ⓐ Model No. Ⓑ Port size Ⓒ Option Ⓓ Other attachments

Code		Description	Ⓐ Model No. W1000	W2000	W3000	W4000	W8000
Ⓑ Port size							
6		Rc1/8	●				
8		Rc1/4	●	●	●	●	
10		Rc3/8		●	●	●	
15		Rc1/2			●	●	
20		Rc3/4					●
25		Rc1					●
Ⓒ Option							*1
Drain discharge *2	**Blank**	Manual drain cock	●	●	●	●	●
	F	Auto-drain, man OVRD (NO: no press→Exhaust)			●	●	●
	F1	Auto-drain, man OVRD (NC: no press→no exhaust)	●	●	●	●	●
	FF	Auto-drain, man OVRD (NO: no press→Exhaust)					●
	FF1	Auto-drain, man OVRD (NC: no press→no exhaust)					●
Bowl material	**Blank**	Polycarbonate bowl	●	●	●	●	●
	Z	Nylon bowl	●	●	●	●	●
	M	Metal bowl			●	●	●
	M1 *3	Metal bowl with manual drain cock		●	●	●	●
Element	**Blank**	5 µm	●	●	●	●	●
	Y *4	0.3 µm (submicron)			●	●	●
Pressure range	**Blank**	0.05 to 0.85 MPa	●	●	●	●	●
	L	0.05 to 0.35 MPa	●	●	●	●	●
Pressure relief	**Blank**	With relief mechanism	●	●	●	●	●
	N	Non-relief	●	●	●	●	●
Pressure gauge	**Blank**	With standard pressure gauge (G401)	●	●	●	●	●
	T	No pressure gauge (gauge port (1/4) is assembled sealed)	●	●	●	●	●
	T8	Pressure gauge ready (gauge port (1/4) is left open)	●	●	●	●	●
	T6 *5	Digital pressure sensor PPX included option	●	●	●	●	●
	RN	Pressure switch with display PPR mounted (NPN output 1 point)	●		●	●	●
	RP	Pressure switch with display PPR mounted (PNP output 1 point)	●		●	●	●
Flow direction	**Blank**	Standard flow (left → right)	●	●	●	●	●
	X1	Reverse flow (right → left)	●	●	●	●	●
Ⓓ Other attachments							
Blank		Not included	●	●	●	●	●
G45P		G45D-8-P10(L:G45D-8-P04)	●	●	●	●	●
G49P		G49D-8-P10(L:G49D-8-P04)	●	●	●	●	●
G59P		G59D-8-P10(L:G59D-8-P04)	●		●	●	●
G40P		G40D-8-P10(L:G40D-8-P04)	●	●	●	●	●
G52P		G52D-8-P10(L:G52D-8-P10)	●	●	●	●	●
R2 *5		Digital pressure sensor: PPX-R10N-6M	●	●	●	●	●

⚠ Precautions for model No. selection

*1: Select options for the drainage, bowl material, element, and regulator.
When selecting options for several items, list options in order from the top.

*2: Refer to page 354 for the auto-drain working conditions.

*3: A manual drain cock is included with all drainage types.

*4: Refer to “Pneumatic, Vacuum, and Auxiliary Components” (CB-024SA) for max. processing flow rate when option “Y” is selected.

*5: When the option “T6” is selected, only “Blank” or “R2” can be selected for Ⓓ Other attachments.
The digital pressure sensor PPX mounting port (Rc1/8) is left open.

Refer to the modular design F.R.L. for specifications and internal structure diagram.

Dimensions

● W1000

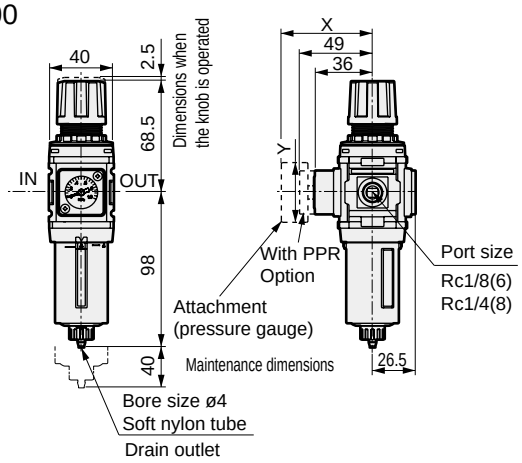

● W2000

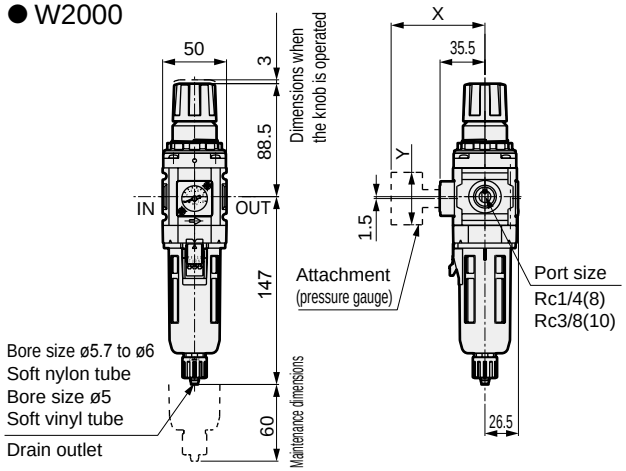

● W3000

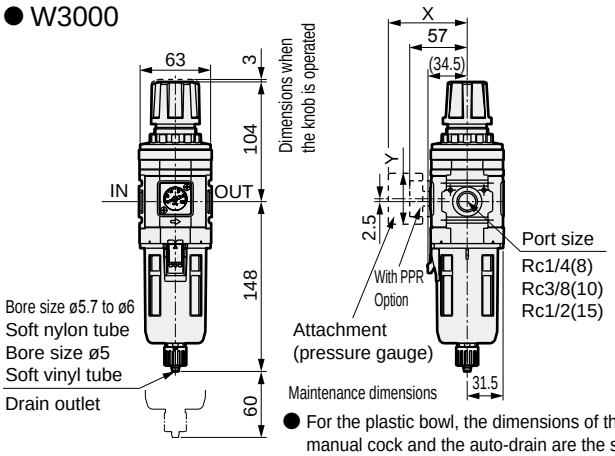

● For the plastic bowl, the dimensions of the manual cock and the auto-drain are the same.

● W4000

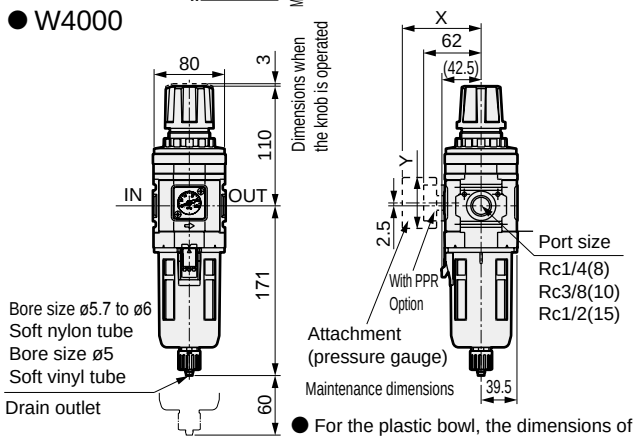

● For the plastic bowl, the dimensions of the manual cock and the auto-drain are the same.

● W8000

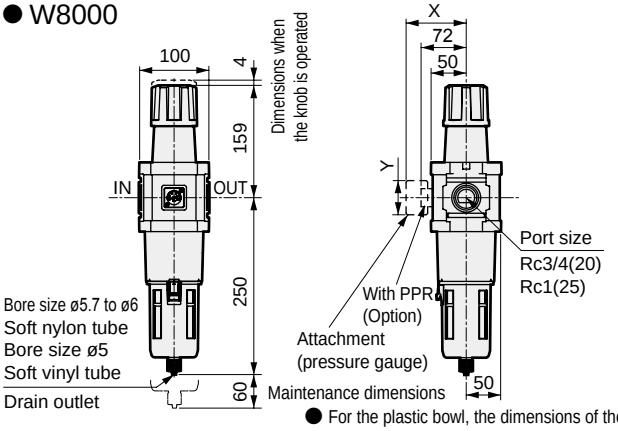

● For the plastic bowl, the dimensions of the manual cock and the auto-drain are the same.

Pressure gauge attached optional dimensions table

Attached pressure gauge	X					Y
	W1000	W2000	W3000	W4000	W8000	
G45P	(74)	(73.5)	(70)	(75)	(85)	ø39
G49P	(73.5)	(73)	(69.5)	(74.5)	(84.5)	ø43.5
G59P	(76)	-	(72)	(77)	(87)	ø52
G40P	(75.5)	(75)	(71.5)	(76.5)	(86.5)	ø42.5
G52P	(86)	(85.5)	(82)	(86)	(98)	ø52.5
R2	(74)	(73)	(69.5)	(75)	(85)	□30

Optional dimensions

● Metal bowl (option)

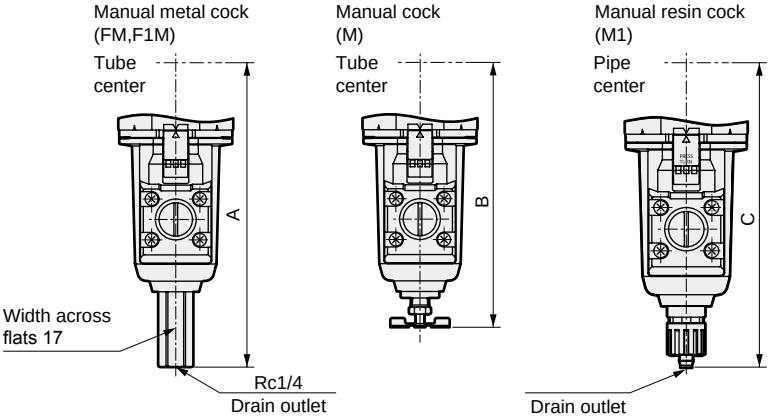

Dimensions table

Model No.	F1M	M	M1
	A	B	C
W2000	-	-	147
W3000	163.5	143.5	154
W4000	187	166.5	177
W8000	256	245.5	256



Reverse filter and regulator Standard White Series

W1100/W2100/W3100/W4100/W8100-W Series

Introducing the 5 µm dust removing and 0.3 µm tar removing element with reverse flow function to the lineup. Port size: Rc1/8 to Rc1

JIS symbol 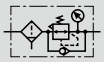

W1100 Interface 40 mm
W2100 Interface 50 mm
W3100 Interface 63 mm
W4100 Interface 80 mm
W8100 Interface 100 mm

RoHS CAD

How to order

W3100 - 8 - W - Z - [ ]

- W3100: Ⓐ Model No.
- 8: Ⓑ Port size
- W: (White type)
- Z: Ⓒ Option
- [ ]: Ⓓ Other attachments

Code		Description	Ⓐ Model No. W1100	W2100	W3100	W4100	W8100
Ⓑ Port size							
6		Rc1/8	●				
8		Rc1/4	●	●	●	●	
10		Rc3/8		●	●	●	
15		Rc1/2			●	●	
20		Rc3/4					●
25		Rc1					●
Ⓒ Option							*1, *2
Drain discharge *4	**Blank**	Manual drain cock	●	●	●	●	●
	F	Auto-drain, man OVRD (NO: no press→Exhaust)			●	●	●
	F1	Auto-drain, man OVRD (NC: no press→no exhaust)	●	●	●	●	●
	FF	Large auto-drain, man OVRD (NO: no press→Exhaust)					●
	FF1	Large auto-drain, man OVRD (NC: no press→no exhaust)					●
Bowl material	**Blank**	Polycarbonate bowl	●		●	●	●
	Z	Nylon bowl	●	●	●	●	●
	M	Metal bowl			●	●	●
	M1 *4	Metal bowl with manual drain cock		●	●	●	●
Element	**Blank**	5 µm	●	●	●	●	●
	Y *5	0.3 µm (submicron)			●	●	●
Pressure range	**Blank**	0.05 to 0.85 MPa	●	●	●	●	●
	L	0.05 to 0.35 MPa	●	●	●	●	●
Pressure relief	**Blank**	With relief mechanism	●	●	●	●	●
	N	Non-relief	●	●	●	●	●
Pressure gauge	**Blank**	With standard pressure gauge (G401)	●	●	●	●	●
	T	No pressure gauge (gauge port (1/4) is assembled sealed)	●	●	●	●	●
	T8	Pressure gauge ready (gauge port (1/4) is left open)	●	●	●	●	●
	T6 *6	Digital pressure sensor PPX included option	●	●	●	●	●
	RN	Pressure switch with display PPR mounted (NPN output 1 point)	●		●	●	●
	RP	Pressure switch with display PPR mounted (PNP output 1 point)	●		●	●	●
Flow direction	**Blank**	Standard flow (left → right)	●	●	●	●	●
	X1	Reverse flow (right → left)	●	●	●	●	●
Ⓓ Other attachments							
Blank		Not included	●	●	●	●	●
G45P		G45D-8-P10(L:G45D-8-P04)	●	●	●	●	●
G49P		G49D-8-P10(L:G49D-8-P04)	●	●	●	●	●
G59P		G59D-8-P10(L:G59D-8-P04)	●		●	●	●
G40P		G40D-8-P10(L:G40D-8-P04)	●	●	●	●	●
G52P		G52D-8-P10(L:G52D-8-P10)	●	●	●	●	●
R2 *6		Digital pressure sensor: PPX-R10N-6M	●	●	●	●	●

⚠ Precautions for model No. selection

*1 : Select options for the drainage, bowl material, element, and regulator.
When selecting options for several items, list options in order from the top.

***2 : Positions of check valve and pressure gauge cannot be changed.**
If the IN and OUT directions must be reversed, indicate "X1" at the end of the option field.

*3 : Refer to page 354 for the auto-drain working conditions.

*4 : A manual drain cock is included with all drainage types.

*5 : Refer to "Pneumatic, Vacuum, and Auxiliary Components" (CB-024SA) for max. processing flow rate when option "Y" is selected.

*6 : When the option "T6" is selected, only "Blank" or "R2" can be selected for Ⓓ Other attachments.
The digital pressure sensor PPX mounting port (Rc1/8) is left open.

Refer to the modular design F.R.L. for specifications and internal structure diagram.

Dimensions

● W1100

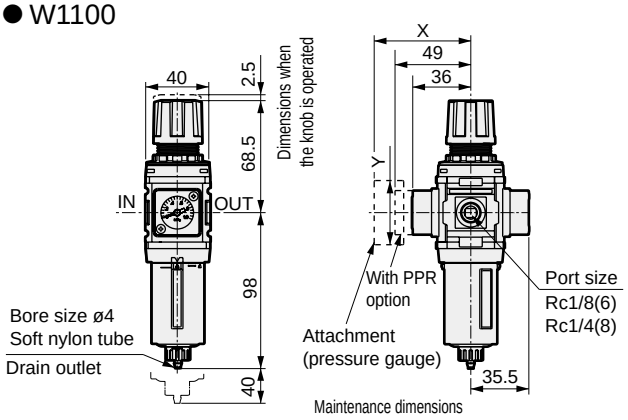

● W2100

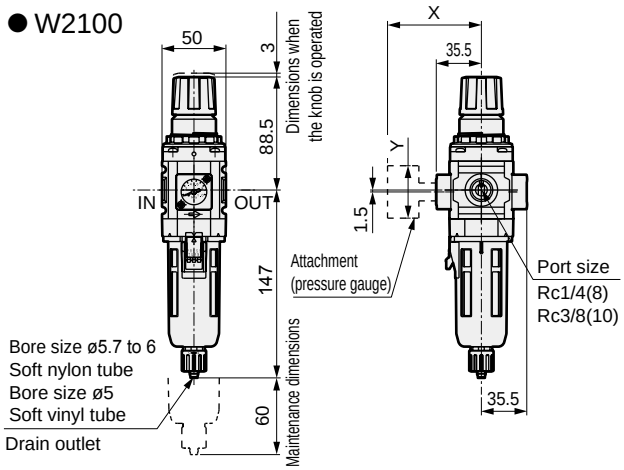

● W3100

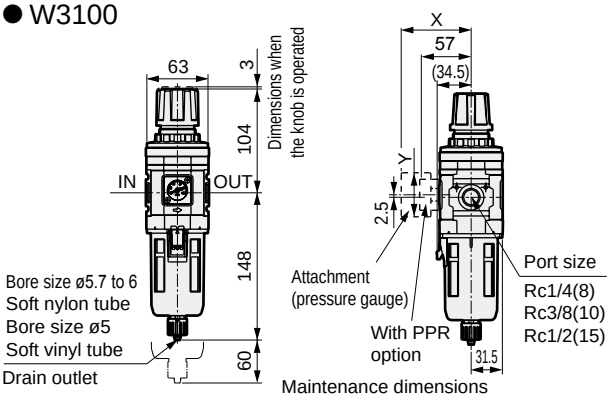

● For the plastic bowl, the dimensions of the manual cock and the auto-drain are the same.

● W4100

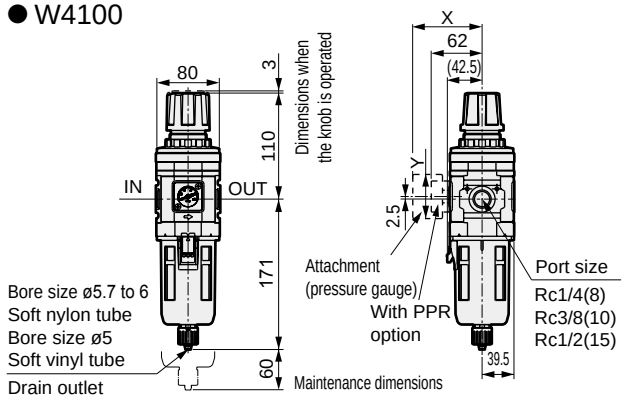

● For the plastic bowl, the dimensions of the manual cock and the auto-drain are the same.

● W8100

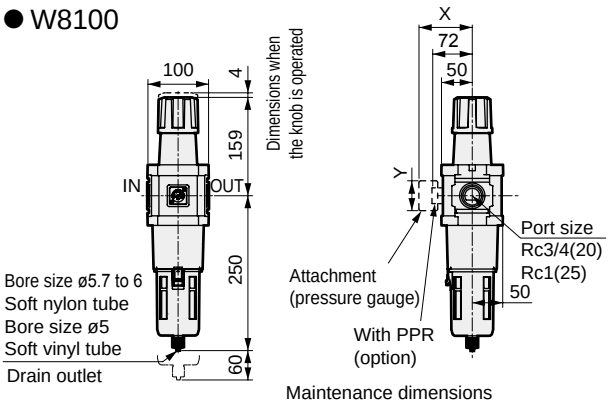

● For the plastic bowl, the dimensions of the manual cock and the auto-drain are the same.

Pressure gauge attached optional dimensions table

Attached pressure gauge	X					Y
	W1100	W2100	W3100	W4100	W8100	
G45P	(74)	(73.5)	(70)	(75)	(85)	ø39
G49P	(73.5)	(73)	(69.5)	(74.5)	(84.5)	ø43.5
G59P	(76)	-	(72)	(77)	(87)	ø52
G40P	(75.5)	(75)	(71.5)	(76.5)	(86.5)	ø42.5
G52P	(86)	(85.5)	(82)	(86)	(98)	ø52.5
R2	(74)	(73)	(69.5)	(75)	(85)	□30

Optional dimensions

● Metal bowl (option)

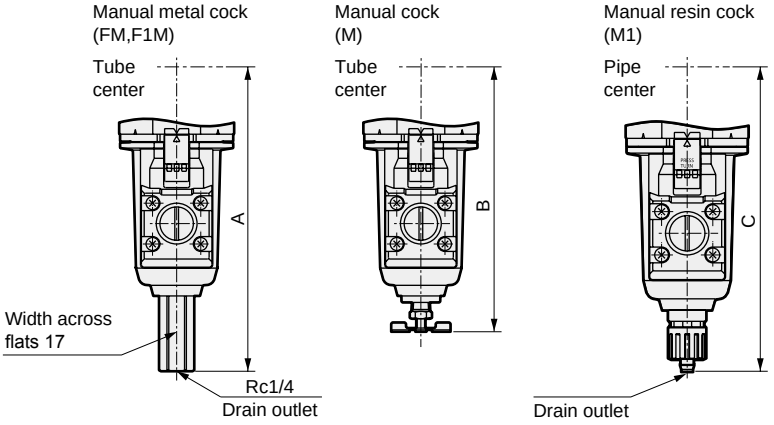

Dimensions table

Model No.	F1M	M	M1
	A	B	C
W2100	-	-	147
W3100	163.5	143.5	154
W4100	187	166.5	177
W8100	256	245.5	256



Air filter Standard White Series

F1000/F2000/F3000/F4000/F6000/F8000-W Series

New Series using 5 µm elements for dust removal, and 0.3 µm elements for tar removal.
Port size: Rc1/8 to Rc1

JIS symbol 

RoHS CAD

F1000 Interface 40 mm
F2000 Interface 50 mm
F3000 Interface 63 mm
F4000 Interface 80 mm
F6000 Interface 90 mm
F8000 Interface 100 mm

How to order

F3000 - 8 - W - Z

- F3000 — Ⓐ Model No.
- 8 — Ⓑ Port size
- W — (White type)
- Z — Ⓒ Option

Code	Description	Ⓐ Model No. F1000	F2000	F3000	F4000	F6000	F8000
Ⓑ Port size							
6	Rc1/8	●					
8	Rc1/4	●	●	●	●		
10	Rc3/8		●	●	●		
15	Rc1/2				●		
20	Rc3/4					●	●
25	Rc1					●	●
Ⓒ Option							*1
Drain discharge *2 **Blank**	With manual drain cock	●	●	●	●	●	●
F	Auto-drain, man OVRD (NO: no press→Exhaust)			●	●	●	●
F1	Auto-drain, man OVRD (NC: no press→no exhaust)	●	●	●	●	●	●
FF	Large auto-drain, man OVRD (NO: no press→Exhaust)						●
FF1	Large auto-drain, man OVRD (NC: no press→no exhaust)						●
Bowl material **Blank**	Polycarbonate bowl	●	●	●	●	●	●
Z	Nylon bowl	●	●	●	●	●	●
M	Metal bowl			●	●	●	●
M1 *3	Metal bowl with manual drain cock		●	●	●	●	●
Element **Blank**	5 µm	●	●	●	●	●	●
Y	0.3 µm (submicron)			●	●	●	●
Diff press detect **Blank**	Without differential pressure detection port	●	●	●	●	●	●
Q	With differential pressure detection port (Rc 1/4)					●	●
Flow direction **Blank**	Standard flow (left → right)	●	●	●	●	●	●
X1	Reverse flow (right → left)	●	●	●	●	●	●

Precautions for model No. selection

*1: Select options for the drainage, bowl material, element, and flow direction.
When selecting options for several items, list options in order from the top.
*2: Refer to page 354 for the auto-drain working conditions.
*3: A manual drain cock is included with all drainage types.

Dimensions

● F1000

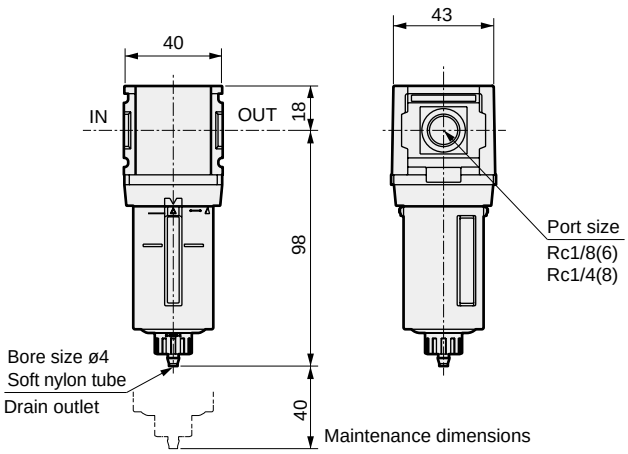

· Dimensions of options
With auto-drain (F1)

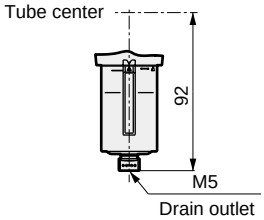

● F2000

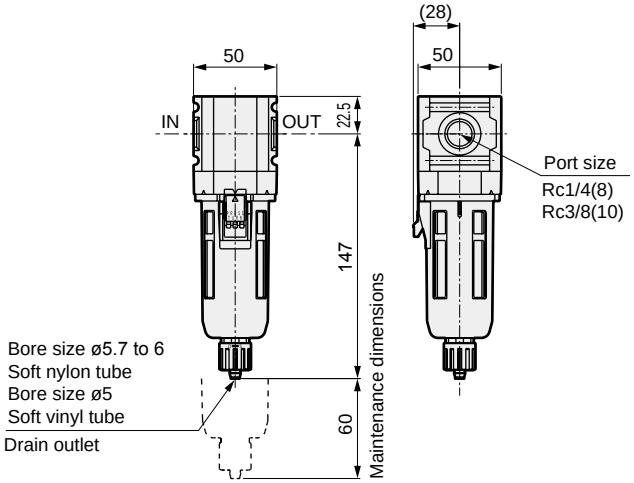

Dimensions

● F3000

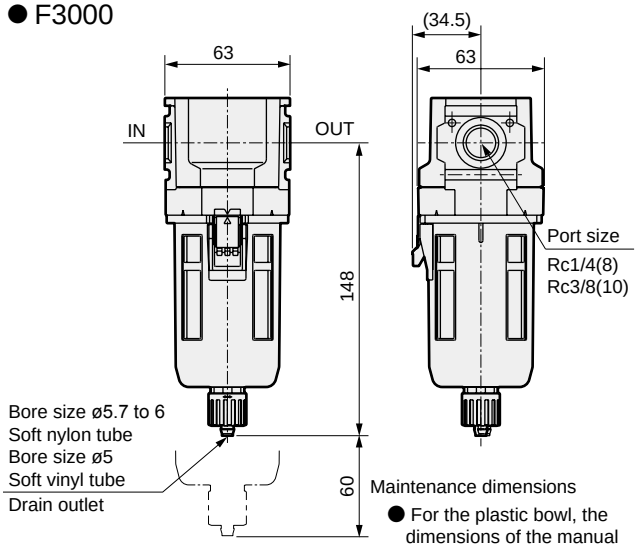

Maintenance dimensions
● For the plastic bowl, the dimensions of the manual cock and the auto-drain are the same.

● F4000

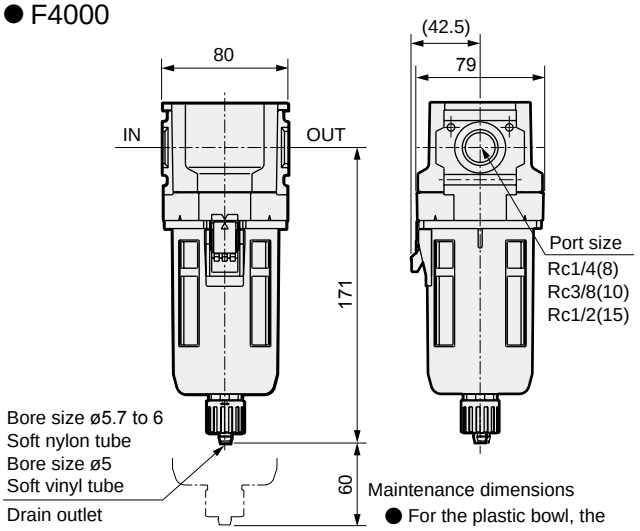

Maintenance dimensions
● For the plastic bowl, the dimensions of the manual cock and the auto-drain are the same.

● F6000

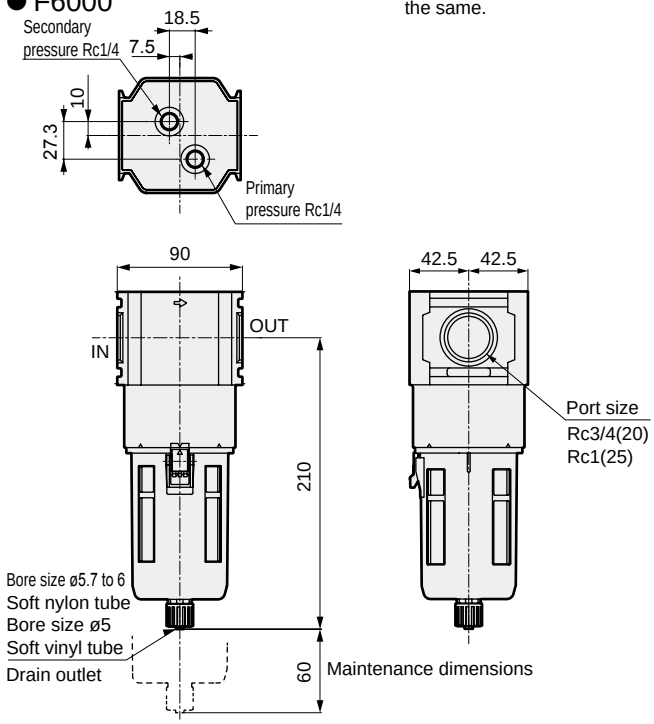

Maintenance dimensions

● F8000

With differential pressure detection port (Q)

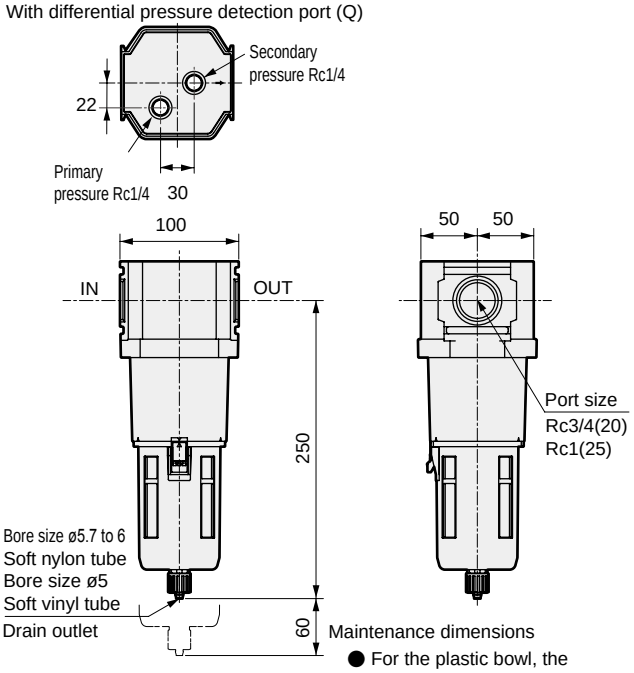

Maintenance dimensions
● For the plastic bowl, the dimensions of the manual cock and the auto-drain are the same.

Optional dimensions

● Metal bowl (option)

Manual metal cock (F1M)

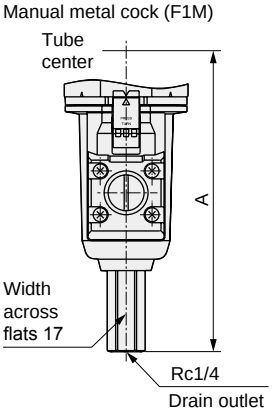

Manual cock (M)

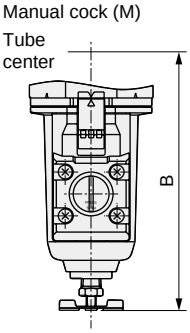

Manual resin cock (M1)

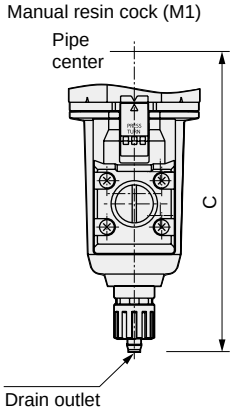

Dimensions table

Model No.	F1M	M	M1
	A	B	C
F2000	-	-	147
F3000	164	143.5	154
F4000	187	166.5	177
F6000	226	205	216
F8000	266	245.5	256

Refer to the modular design F.R.L. for specifications and internal structure diagram.

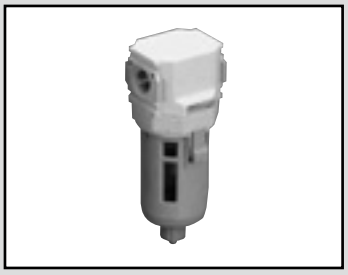

Oil mist filter Standard White Series

M1000/M2000/M3000/M4000/M6000/M8000-W Series

Ideal for circuits susceptible to oil, including measuring and instrumentation circuits.

Port size: Rc1/8 to Rc1

JIS symbol 

RoHS CAD

M1000 Interface 40 mm
M2000 Interface 50 mm
M3000 Interface 63 mm
M4000 Interface 80 mm
M6000 Interface 90 mm
M8000 Interface 100 mm

How to order

M3000 - 8 - W - S

- M3000 — Ⓐ Model No.
- 8 — Ⓑ Port size
- W — (White type)
- S — Ⓒ Option

Code	Description	Ⓐ Model No. M1000	M2000	M3000	M4000	M6000	M8000
Ⓑ Port size							
6	Rc1/8	●					
8	Rc1/4	●	●	●	●		
10	Rc3/8		●	●	●		
15	Rc1/2				●		
20	Rc3/4					●	●
25	Rc1					●	●
Ⓒ Option							***1**
Drain discharge *2, *3 **Blank**	With manual drain cock	●	●	●	●	●	●
F1	Auto-drain, man OVRD (NC: No press→No exhaust)	●	●	●	●	●	●
Bowl material **Blank**	Polycarbonate bowl	●	●	●	●	●	●
Z	Nylon bowl	●	●	●	●	●	●
M	Metal bowl			●	●	●	●
M1 *4	Metal bowl with manual drain cock		●	●	●	●	●
Mantle (Element) **Blank**	M type (nominal 0.01 µm; remaining oil 0.01 mg/m³ or less)	●	●	●	●	●	●
S	S type (nominal 0.3 µm; remaining oil 0.5 mg/m³ or less)	●	●	●	●	●	●
X *5	X type (deodorization; remaining oil 0.03mg/m³)	●	●	●	●	●	●
Diff press detect **Blank**	Without differential pressure detection port	●	●	●	●	●	●
Q	With differential pressure detection port (Rc 1/4)					●	●
Diff press indicator **Blank**	Without differential pressure indicator	●	●	●	●	●	●
Q1 *6	With differential pressure indicator				●		
Q2	With differential pressure indicator		●	●	●	●	
Differential pressure switch **Q3**	Differential pressure indicator + switch 1-point (SW2)		●	●	●	●	
Q4	Differential pressure indicator + switch 2-point (SW1/SW2)		●	●	●	●	
Flow direction **Blank**	Standard flow (left → right)	●	●	●	●	●	●
X1	Reverse flow (right → left)	●	●	●	●	●	●

Precautions for model No. selection

*1: Select options for drainage, bowl material, mantle, and flow direction.
When selecting options for several items, list options in order from the top.
*2: NO auto-drain cannot be selected.
*3: Refer to page 354 for the auto-drain working conditions.
*4: A manual drain cock is included with all drainage types.
*5: Combination with option F1 is not possible.
*6: This cannot be selected with "M" and "X". Replace the element before the differential pressure indicator's color changes completely to red.
The differential pressure indicator functions only when the compressed air is flowing. Note that it does not operate simply by pressurization.

Dimensions

● M1000

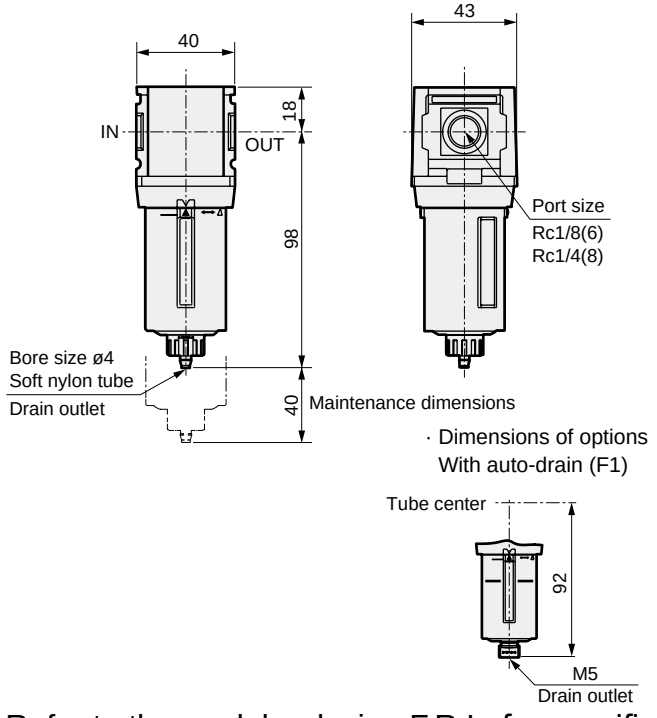

· Dimensions of options
With auto-drain (F1)

● M2000

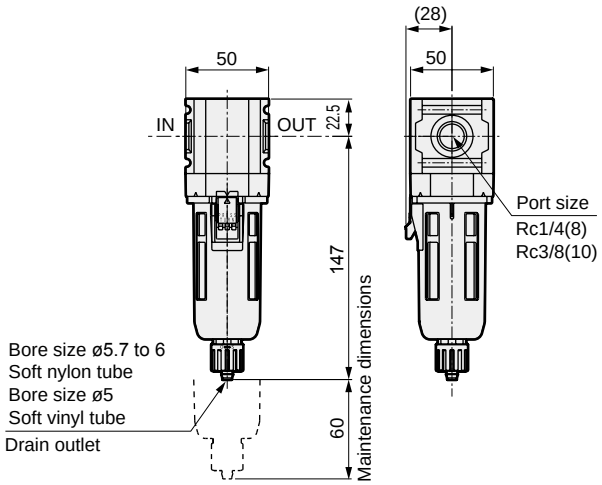

Refer to the modular design F.R.L. for specifications and internal structure diagram.

Dimensions

● M3000

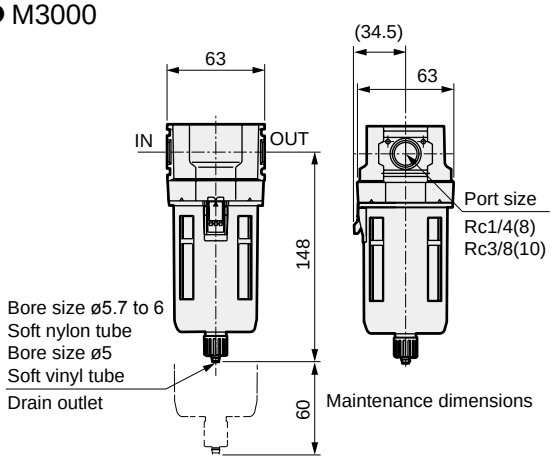

● For the plastic bowl, the dimensions of the manual cock and the auto-drain are the same.

● M4000

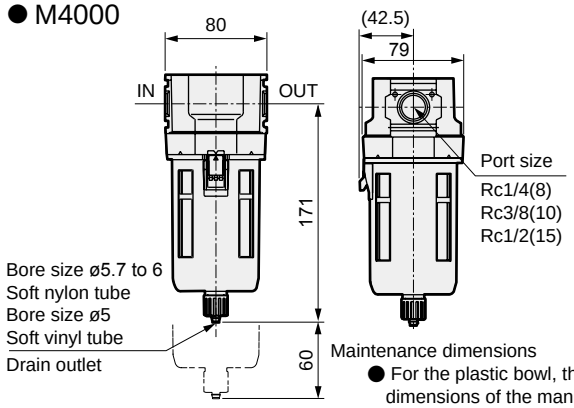

● For the plastic bowl, the dimensions of the manual cock and the auto-drain are the same.

● With differential pressure indicator (option) Q1

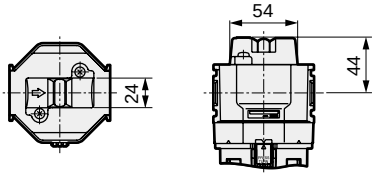

● M6000

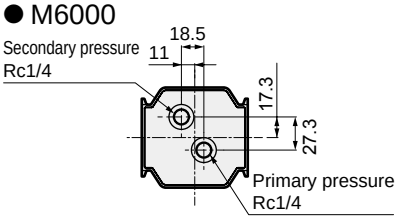

With differential pressure detection port

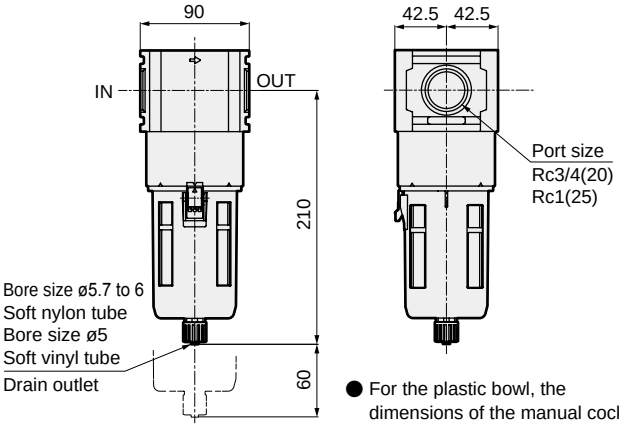

● For the plastic bowl, the dimensions of the manual cock and the auto-drain are the same.

● M8000

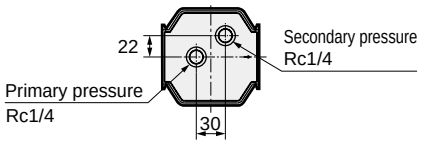

Option
(With differential pressure detection port)

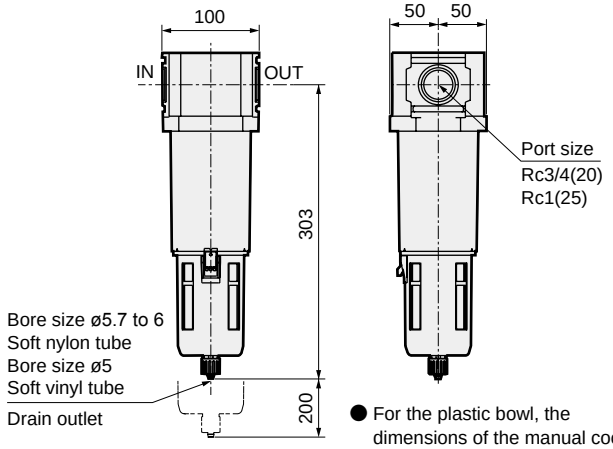

● For the plastic bowl, the dimensions of the manual cock and the auto-drain are the same.

Optional dimensions

● Metal bowl

Manual metal cock (F1M)

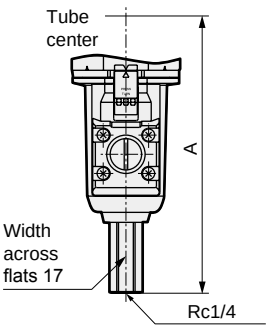

Manual cock (M)

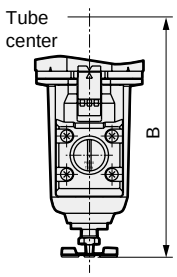

Manual resin cock (M1)

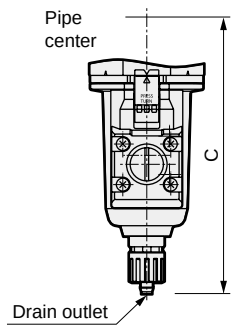

Model No.	F1M	M	M1
	A	B	C
M2000	-	-	147
M3000	164	143.5	154
M4000	187	166.5	177
M6000	226	205	216
M8000	319	298	309

● Differential pressure indicator/differential pressure switch Q2/Q3/Q4

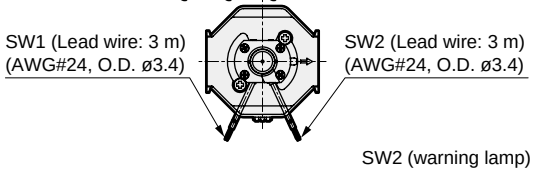

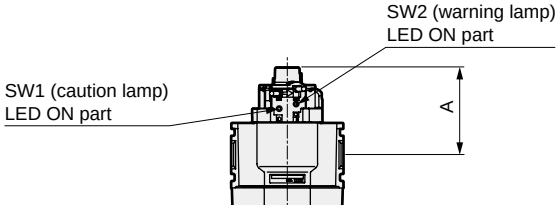

Model No.	A
M2000	62
M3000	62
M4000	62
M6000	72.5

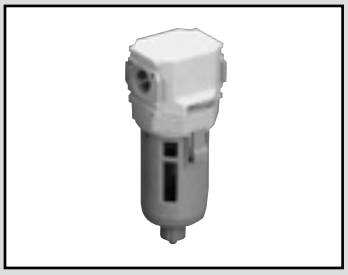

High performance oil mist filter/Standard White Series

MX1000/MX3000/MX4000/MX6000/MX8000-W Series

Secondary oil content 0.001 mg/m^3

Ideal for optical devices, such as optical positioning devices and laser processing systems.

Port size: Rc1/8 to Rc1

JIS symbol 

RoHS

MX1000	MX3000	MX4000	MX6000	MX8000
Interface 40 mm	Interface 63 mm	Interface 80 mm	Interface 90 mm	Interface 100 mm

How to order

MX3000 - 8 - W - Z

(White type)

Ⓐ Model No. Ⓑ Port size Ⓒ Option

Code		Description	Ⓐ Model No. MX1000	MX3000	MX4000	MX6000	MX8000
Ⓑ Port size							
6		Rc1/8	●				
8		Rc1/4	●	●	●		
10		Rc3/8		●	●		
15		Rc1/2			●		
20		Rc3/4				●	●
25		Rc1				●	●
Ⓒ Option							*1
Drain discharge *2, *3	**Blank**	With manual drain cock	●	●	●	●	●
	F1	Auto-drain, man OVRD (NC: No press→No exhaust)	●	●	●	●	●
Bowl material	**Blank**	Polycarbonate bowl	●	●	●	●	●
	Z	Nylon bowl	●	●	●	●	●
	M	Metal bowl		●	●	●	●
	M1 *4	Metal bowl with manual drain cock		●	●	●	●
Diff press detect	**Blank**	Without differential pressure detection port	●	●	●	●	●
	Q	With differential pressure detection port (Rc 1/4)				●	●
Flow direction	**Blank**	Standard flow (left → right)	●	●	●	●	●
	X1	Reverse flow (right → left)	●	●	●	●	●

⚠ Precautions for model No. selection

*1: Select options for drainage, bowl material and differential pressure detection.
When selecting options for several items, list options in order from the top.
*2: NO auto-drain cannot be selected.
*3: Refer to page 354 for the auto-drain working conditions.
*4: A manual drain cock is included with all drainage types.

Dimensions

● MX1000

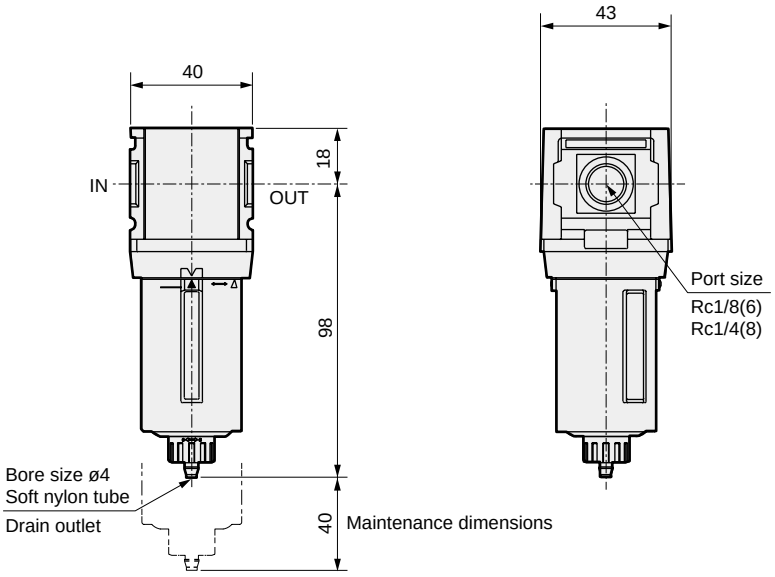

· Dimensions of options
With auto-drain (F1)

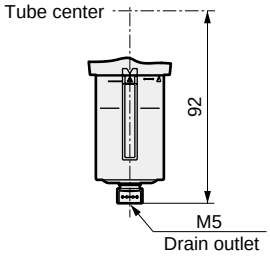

Refer to the modular design F.R.L. for specifications and internal structure diagram.

Dimensions

● MX3000

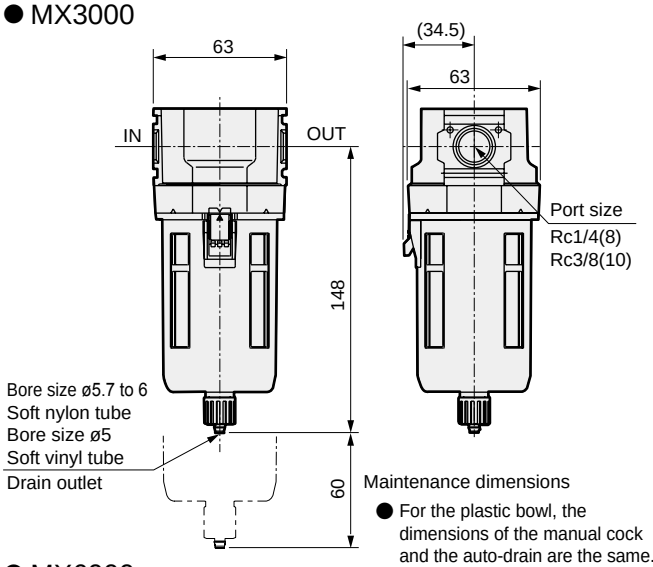

Maintenance dimensions

● For the plastic bowl, the dimensions of the manual cock and the auto-drain are the same.

● MX4000

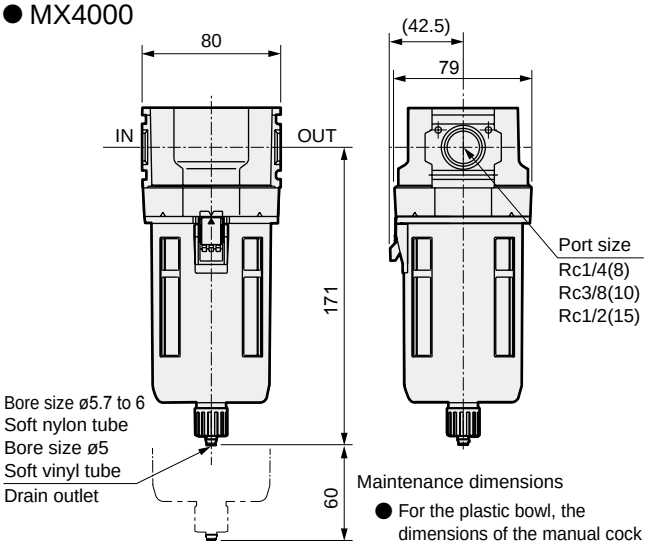

Maintenance dimensions

● For the plastic bowl, the dimensions of the manual cock and the auto-drain are the same.

● MX6000

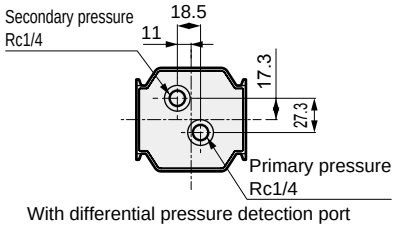

With differential pressure detection port

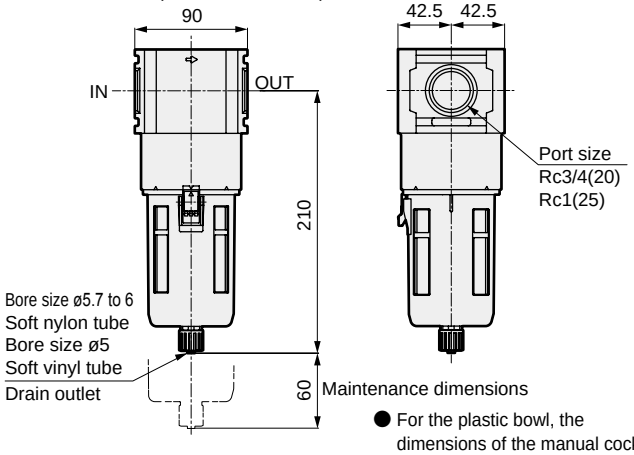

Maintenance dimensions

● For the plastic bowl, the dimensions of the manual cock and the auto-drain are the same.

● MX8000

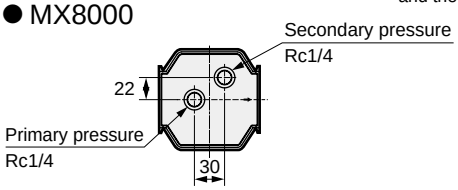

Option

(With differential pressure detection port)

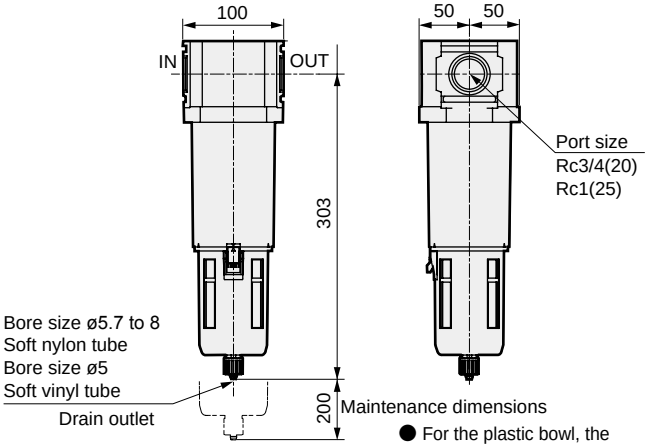

Maintenance dimensions

● For the plastic bowl, the dimensions of the manual cock and the auto-drain are the same.

Optional dimensions

● Metal bowl (option)

Manual metal cock (F1M)

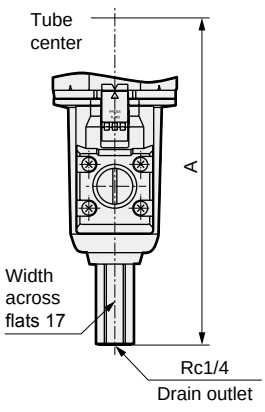

Manual cock (M)

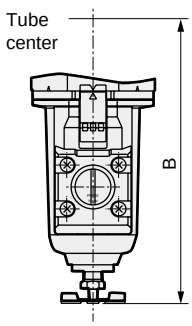

Manual resin cock (M1)

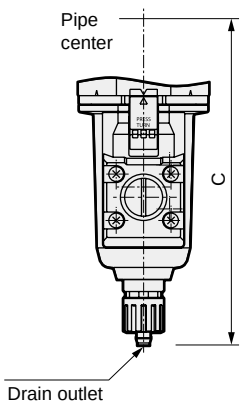

Dimensions table

Model No.	F1M	M	M1
	A	B	C
MX3000	164	143.5	154
MX4000	187	166.5	177
MX6000	226	205	216
MX8000	319	298	309

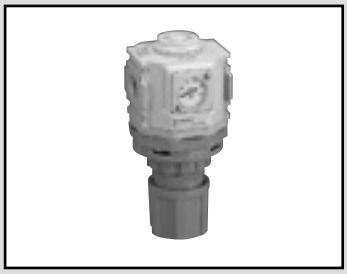

Regulator Standard White Series

R1000/R2000/R3000/R4000/R6000/R8000-W Series

Compact, pressure gauge embedded.
Port size: Rc1/8 to Rc1

JIS symbol 

RoHS CAD

R1000 Interface 40 mm
R2000 Interface 50 mm
R3000 Interface 63 mm
R4000 Interface 80 mm
R6000 Interface 90 mm
R8000 Interface 100 mm

How to order

R3000 - 8 - W - L - G49P

- R3000 — Ⓐ Model No.
- 8 — Ⓑ Port size
- W — (White type)
- L — Ⓒ Option
- G49P — Ⓓ Other attachments

Code		Description	Ⓐ Model No. R1000	R2000	R3000	R4000	R6000	R8000
Ⓑ Port size								
6		Rc1/8	●					
8		Rc1/4	●	●	●	●		
10		Rc3/8		●	●	●		
15		Rc1/2				●		
20		Rc3/4					●	●
25		Rc1					●	●
Ⓒ Option								*1
Press Range	**Blank**	0.05 to 0.85 MPa	●	●	●	●	●	●
	L	0.05 to 0.35 MPa	●	●	●	●	●	●
Pressure relief	**Blank**	With relief mechanism	●	●	●	●	●	●
	N	Non-relief	●	●	●	●	●	●
Pressure gauge	**Blank**	With standard pressure gauge (G401)	●	●	●	●	●	●
	T	No pressure gauge (gauge port (1/4) is assembled sealed)	●	●	●	●	●	●
	T8	Pressure gauge ready (gauge port (1/4) is left open)	●	●	●	●	●	●
	T6 *2	Digital pressure sensor PPX included option	●	●	●	●	●	●
	RN	Pressure switch with display PPR mounted (NPN output 1 point)	●	●	●	●	●	●
	RP	Pressure switch with display PPR mounted (PNP output 1 point)	●	●	●	●	●	●
Flow direction	**Blank**	Standard flow (left → right)	●	●	●	●	●	●
	X1	Reverse flow (right → left)	●	●	●	●	●	●
Ⓓ Other attachments								
Blank		Not included	●	●	●	●	●	●
G45P		G45D-8-P10(L:G45D-8-P04)	●	●	●	●	●	●
G49P		G49D-8-P10(L:G49D-8-P04)	●	●	●	●	●	●
G59P		G59D-8-P10(L:G59D-8-P04)	●	●	●	●	●	●
G40P		G40D-8-P10(L:G40D-8-P04)	●	●	●	●	●	●
G52P		G52D-8-P10(L:G52D-8-P10)	●	●	●	●	●	●
R2 *2		Digital pressure sensor: PPX-R10N-6M	●	●	●	●	●	●

⚠ Precautions for model No. selection

*1: When selecting options for several items, list options in order from the top.
*2: When the option "T6" is selected, only "Blank" or "R2" can be selected for Ⓓ Other attachments.
The digital pressure sensor PPX mounting port (Rc1/8) is left open.

Refer to the modular design F.R.L. for specifications and internal structure diagram.

Dimensions

● R1000

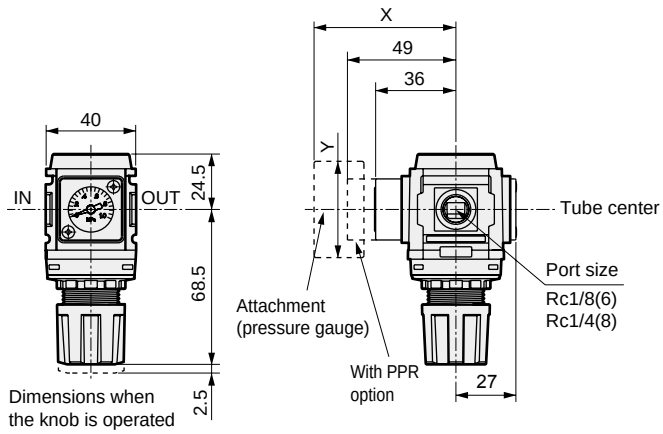

● R2000

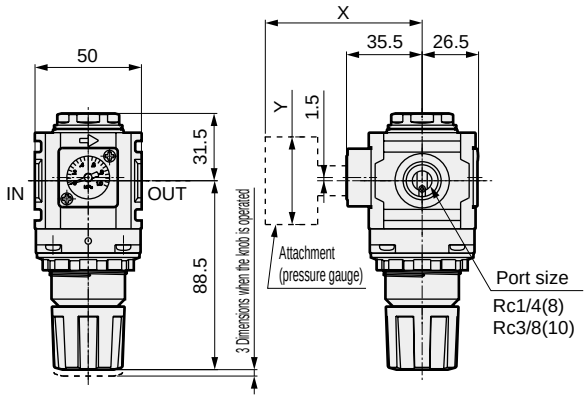

● R3000

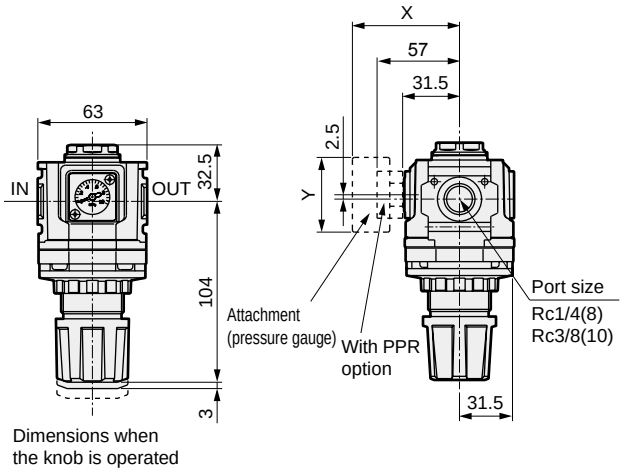

● R4000

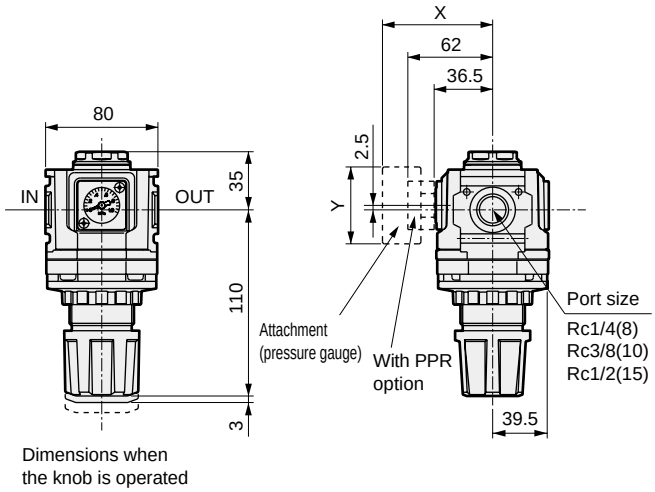

● R6000

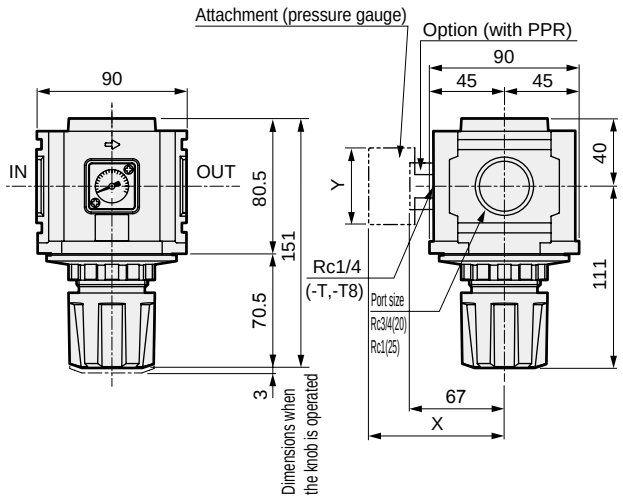

● R8000

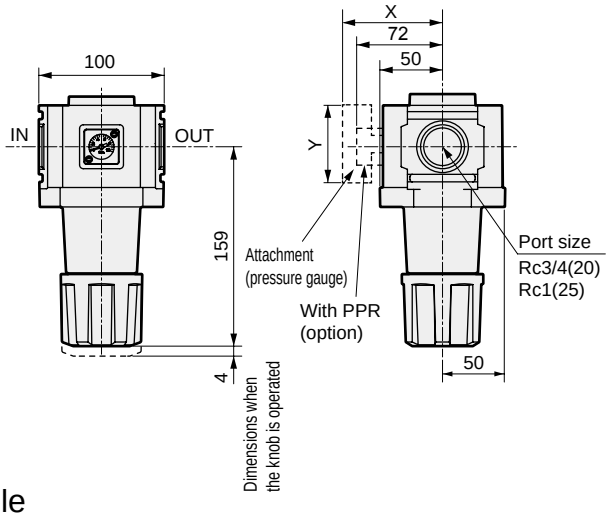

Pressure gauge attached optional dimensions table

Attached pressure gauge	X						Y
	R1000	R2000	R3000	R4000	R6000	R8000	
G45P	(74)	(73.5)	(70)	(75)	(80)	(85)	ø39
G49P	(73.5)	(73)	(69.5)	(74.5)	(79.5)	(84.5)	ø43.5
G59P	(76)	(75.5)	(72)	(77)	(82)	(87)	ø52
G40P	(75.5)	(75)	(71.5)	(76.5)	(81.5)	(86.5)	ø42.5
G52P	(86)	(85.5)	(82)	(86)	(93)	(98)	ø52.5
R2	(74)	(73)	(69.5)	(75)	(80)	(85)	□30



Reverse regulator Standard White Series

R1100/R2100/R3100/R4100/R6100/R8100-W Series

From secondary pressure to primary side with reverse flow function built in.

Port size: Rc1/8 to Rc1

JIS symbol

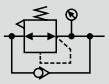

RoHS CAD

R1100 Interface 40 mm
R2100 Interface 50 mm
R3100 Interface 63 mm
R4100 Interface 80 mm
R6100 Interface 90 mm
R4100 Interface 100 mm

How to order

R3100 - 8 - W - L - G49P

(White type)

Ⓐ Model No. Ⓑ Port size Ⓒ Option Ⓓ Other attachments

Code		Description	Ⓐ Model No. R1100	R2100	R3100	R4100	R6100	R8100
Ⓑ Port size								
6		Rc1/8	●					
8		Rc1/4	●	●	●	●		
10		Rc3/8		●	●	●		
15		Rc1/2				●		
20		Rc3/4					●	●
25		Rc1					●	●
Ⓒ Option								*1, *2
Pressure range	**Blank**	0.05 to 0.85 MPa	●	●	●	●	●	●
	L	0.05 to 0.35 MPa	●	●	●	●	●	●
Pressure relief	**Blank**	With relief mechanism	●	●	●	●	●	●
	N	Non-relief	●	●	●	●	●	●
Pressure gauge	**Blank**	With standard pressure gauge (G401)	●	●	●	●	●	●
	T	No pressure gauge (gauge port (1/4) is assembled sealed)	●	●	●	●	●	●
	T8	Pressure gauge ready (gauge port (1/4) is left open)	●	●	●	●	●	●
	T6 *3	Digital pressure sensor PPX included option	●	●	●	●	●	●
	RN	Pressure switch with display PPR mounted (NPN output 1 point)	●	●	●	●	●	●
	RP	Pressure switch with display PPR mounted (PNP output 1 point)	●	●	●	●	●	●
Flow direction	**Blank**	Standard flow (left → right)	●	●	●	●	●	●
	X1	Reverse flow (right → left)	●	●	●	●	●	●
Ⓓ Other attachments								
Blank		Not included	●	●	●	●	●	●
G45P		G45D-8-P10(L:G45D-8-P04)	●	●	●	●	●	●
G49P		G49D-8-P10(L:G49D-8-P04)	●	●	●	●	●	●
G59P		G59D-8-P10(L:G59D-8-P04)	●	●	●	●	●	●
G40P		G40D-8-P10(L:G40D-8-P04)	●	●	●	●	●	●
G52P		G52D-8-P10(L:G52D-8-P10)	●	●	●	●	●	●
R2 *3		Digital pressure sensor: PPX-R10N-6M	●	●	●	●	●	●

⚠ Precautions for model No. selection

*1 : When selecting options for several items, list options in order from the top.

***2 : Positions of check valve and pressure gauge cannot be changed. If the IN and OUT directions must be reversed, indicate "X1" at the end of the option field.**

*3 : When the option "T6" is selected, only "Blank" or "R2" can be selected for Ⓓ Other attachments. The digital pressure sensor PPX mounting port (Rc1/8) is left open.

Refer to the modular design F.R.L. for specifications and internal structure diagram.

Dimensions

● R1100

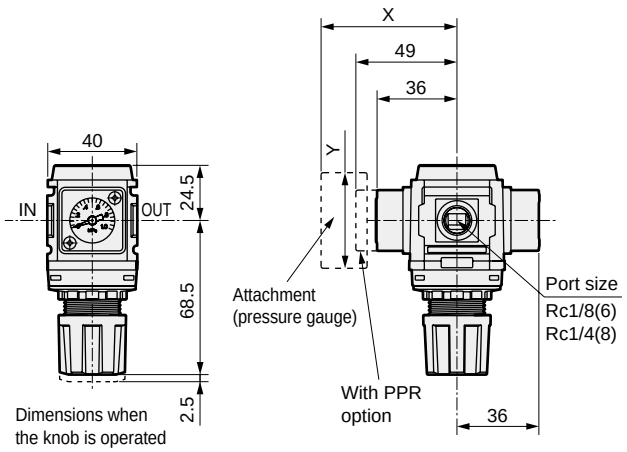

● R2100

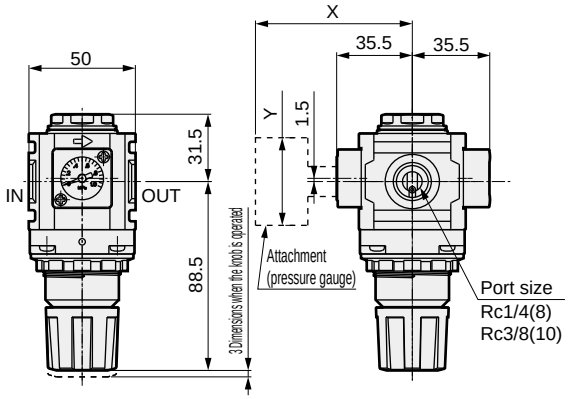

● R3100

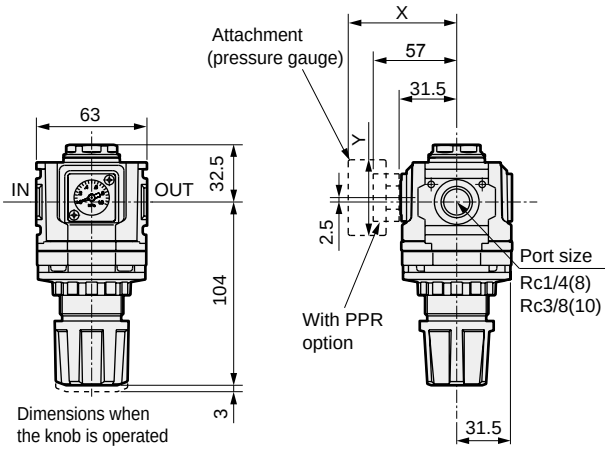

● R4100

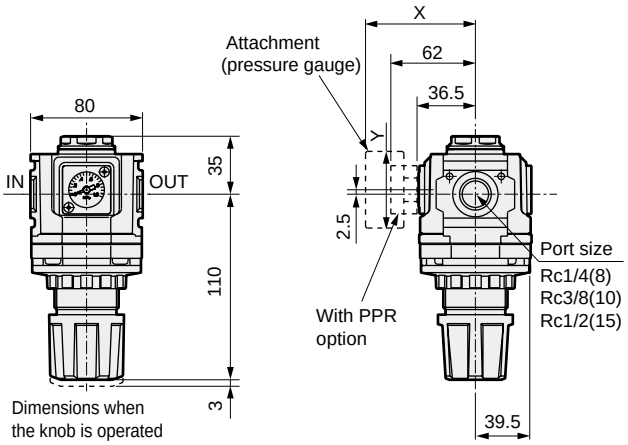

● R6100

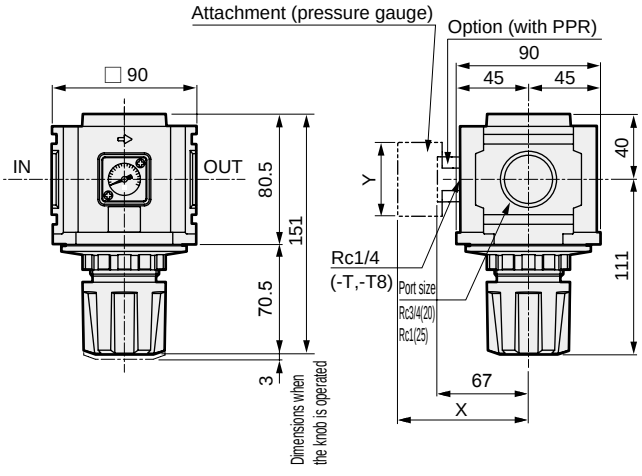

● R8100

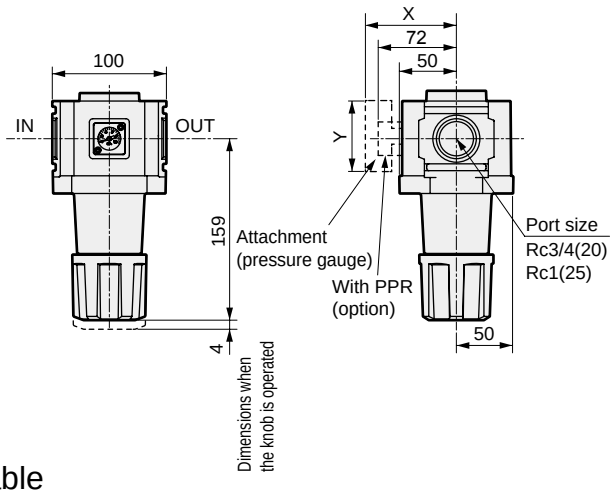

Pressure gauge attached optional dimensions table

Attached pressure gauge	X						Y
	R1100	R2100	R3100	R4100	R6100	R8100	
G45P	(74)	(73.5)	(70)	(75)	(80)	(85)	ø39
G49P	(73.5)	(73)	(69.5)	(74.5)	(79.5)	(84.5)	ø43.5
G59P	(76)	(75.5)	(72)	(77)	(82)	(87)	ø52
G40P	(75.5)	(75)	(71.5)	(76.5)	(81.5)	(86.5)	ø42.5
G52P	(86)	(85.5)	(82)	(86)	(93)	(98)	ø52.5
R2	(74)	(73)	(69.5)	(75)	(80)	(85)	□30

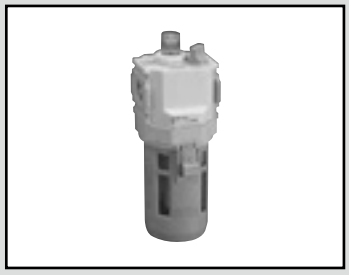

Lubricator Standard White Series

L1000/L3000/L4000/L8000-W Series

Supplies fine oil mist.
Port size: Rc1/8 to Rc1

JIS symbol 

L1000 Interface 40 mm
L3000 Interface 63 mm
L4000 Interface 80 mm
L8000 Interface 100 mm

RoHS CAD

How to order

L3000 - 8 - W - C

(White type)

Ⓐ Model No. Ⓑ Port size Ⓒ Option

Precautions for model No. selection

*1: When selecting options for several items, list options in order from the top.
*2: The adjusting dome material remains unchanged (polycarbonate), even when a nylon bowl or metal bowl is selected. Contact CKD if a different material is required.

Drainage and bowl material combination (Model No. display Ⓒ section) Option ● with float switch

	3000/4000/8000 Series		
Shape	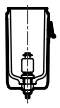	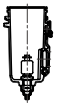	
Material	Plastic bowl		Metal bowl
	Polycarbonate	Nylon	Aluminum
Lubricator L*000	LL	LLZ	LLM

Code		Description	L1000	L3000	L4000	L8000
Ⓐ Model No.						
Ⓑ Port size						
6		Rc1/8	●			
8		Rc1/4	●	●	●	
10		Rc3/8		●	●	
15		Rc1/2			●	
20		Rc3/4				●
25		Rc1				●
Ⓒ Option						
Drain discharge	Blank	Without manual cock	●	●	●	●
	C	With manual cock	●	●	●	●
	LL	With float switch		●	●	●
Bowl material	Blank	Polycarbonate bowl	●	●	●	●
	Z	Nylon bowl	●	●	●	●
	M	Metal bowl		●	●	●
Flow direction	Blank	Standard flow (left → right)	●	●	●	●
	X1	Reverse flow (right → left)	●	●	●	●

Dimensions

● L1000

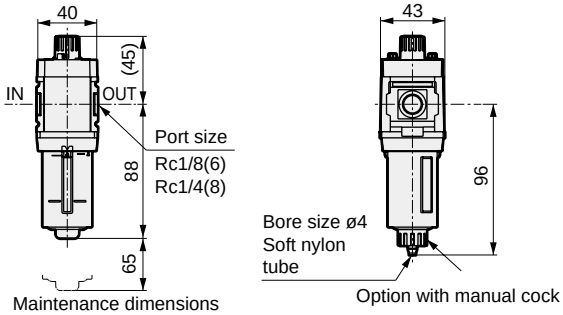

● L3000

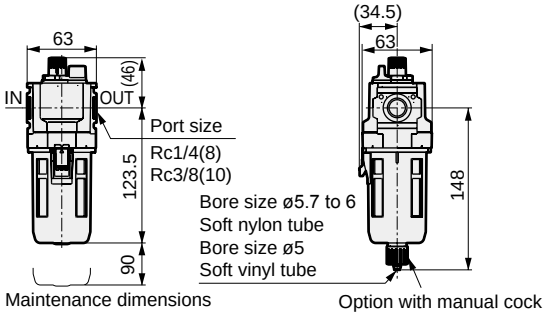

● L4000

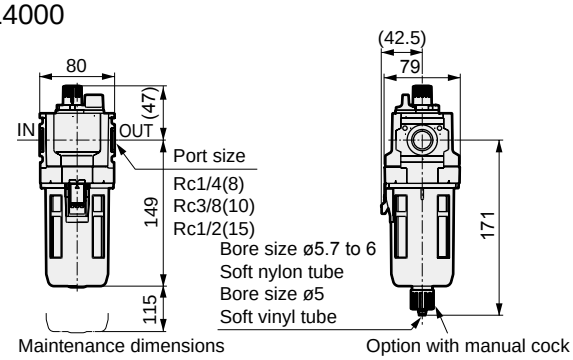

● L8000

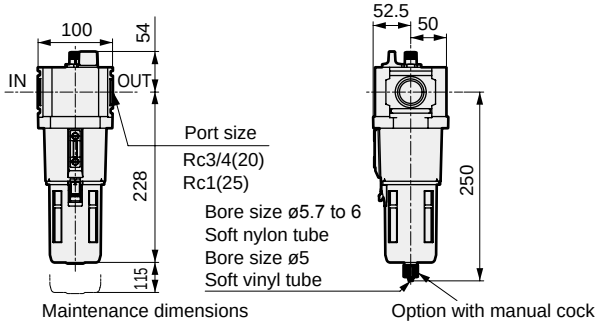

Refer to the modular F.R.L. for specifications and internal structure diagram.



Drain separator

FX Series

Lightweight compact drain separator
Compatible compressor 0.75 kW to 37 kW
Port size: Rc1/4 to Rc1

JIS symbol



FX1004 Interface 63 mm
FX1011 Interface 80 mm
FX1037 Interface 100 mm

RoHS CAD

How to order

FX1004 - **8** - **W** - **F**

Ⓐ Model No.
Ⓑ Port size
Ⓓ Option

Code	Description	Ⓐ Model No. FX1004	FX1011	FX1037
Ⓑ Port size				
8	Rc1/4	●	●	
10	Rc3/8	●	●	
15	Rc1/2		●	
20	Rc3/4			●
25	Rc1			●
Ⓓ Option *1, 2				
Drain discharge **Blank**	With manual drain cock (1/8 internal thread only for metal bowl)	●	●	●
C	With manual cock (can only be selected for metal bowl)	●	●	●
F	Auto-drain with manual override (NO: Exhaust when not pressurized)	●	●	●
F1	Auto-drain with manual override (NC: No exhaust when not pressurized)	●	●	●
Bowl material **Blank**	Polycarbonate bowl	●	●	●
Z	Nylon bowl	●	●	●
M	Metal bowl	●	●	●
M1	Metal bowl with manual drain cock	●	●	●
Flow direction **Blank**	Standard flow (left → right)	●	●	●
X1	Reverse flow (right → left)	●	●	●

⚠ Precautions for model No. selection

*1: Select options for the drainage, bowl material, and flow direction.
When selecting options for several items, list options in order from the top.
*2: Refer to "Pneumatic, Vacuum, and Auxiliary Components" (CB-024SA) for the auto-drain use conditions.

Dimensions

● FX1004

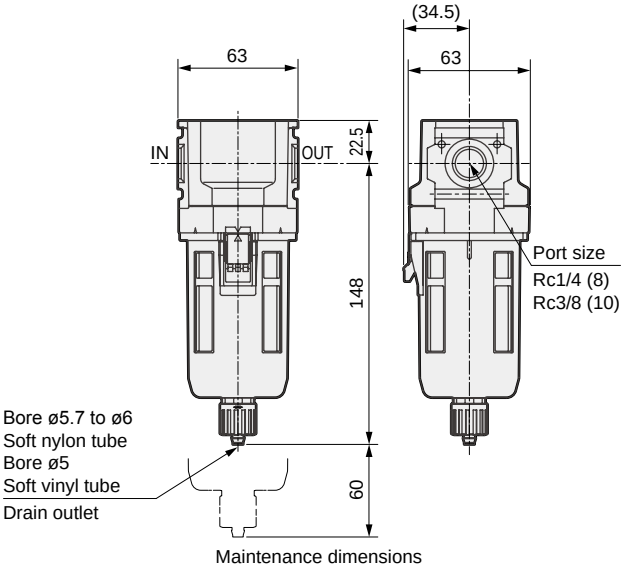

Maintenance dimensions

● For the plastic bowl, the dimensions of the manual cock and the auto-drain are the same.

● FX1011

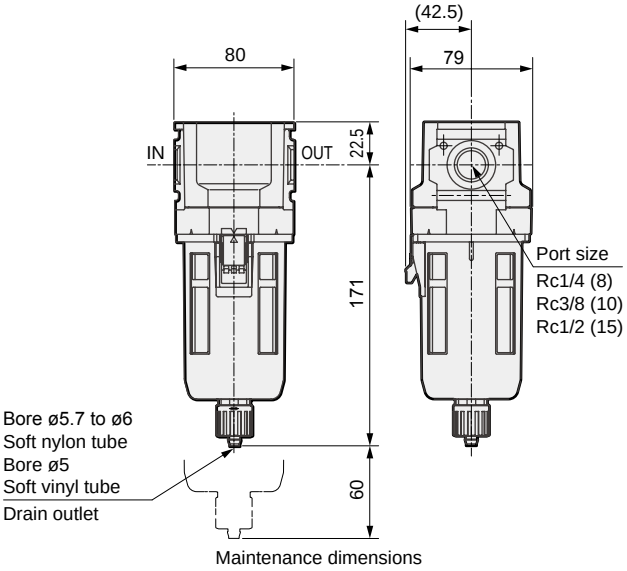

Maintenance dimensions

● For the plastic bowl, the dimensions of the manual cock and the auto-drain are the same.

Refer to the modular F.R.L. for specifications and internal structure diagram.

Dimensions

● FX1037-W

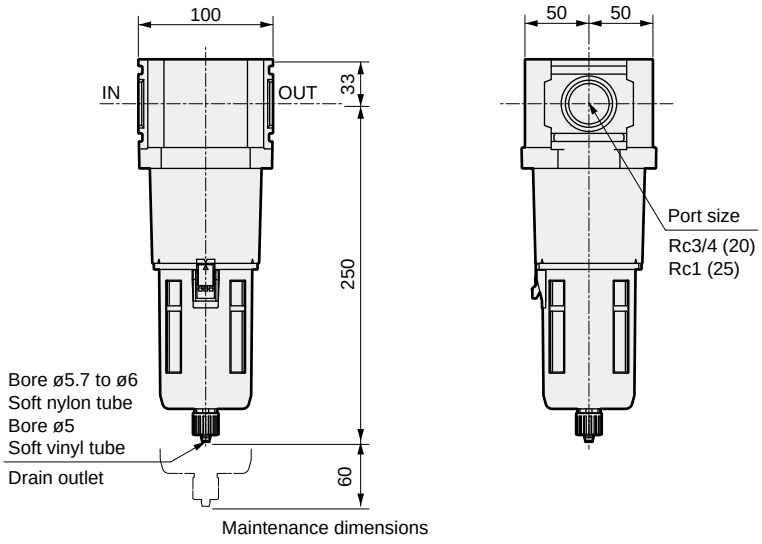

Maintenance dimensions

● For the plastic bowl, the dimensions of the manual cock and the auto-drain are the same.

Optional dimensions

● Metal bowl FX1004-W/FX1011-W/FX1037-W (option)

Metal bowl
with auto-drain (FM, F1M)

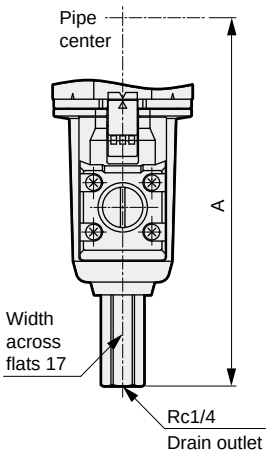

Metal bowl
with manual cock (CM)

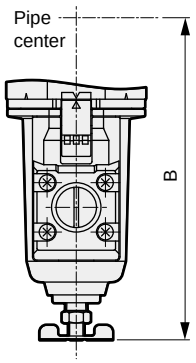

Metal bowl
without cock (M)

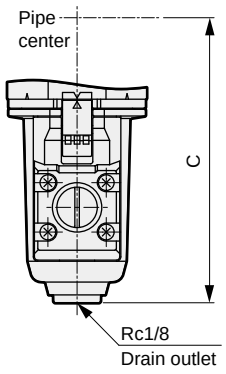

Metal bowl
with manual cock (CM1, FM1, F1M1)

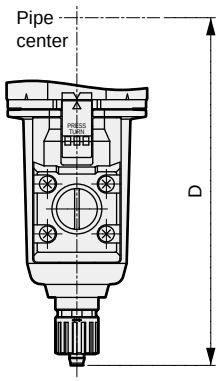

Dimensions table

Model No.	FM/F1M	CM	M	CM1/FM1/F1M1
	A	B	C	D
FX1004	164	143.5	127	154
FX1011	187	166.5	150	177
FX1037	266	245.5	229	256

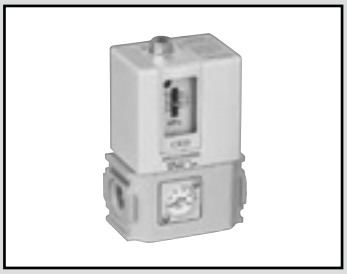

Mechanical pressure switch Standard White Series

P4000-W Series

Wide pressure setting range covers 0.1 to 0.8 MPa.
Port size: Rc1/4 to Rc1/2

JIS symbol 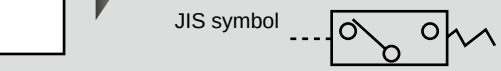

RoHS CAD Interface 80 mm

How to order

P4000 - 8 - W - 1N

(White type)

Ⓐ Port size

Ⓑ Option

Code	Description
Ⓐ Port size	
8	Rc1/4
10	Rc3/8
15	Rc1/2
Ⓑ Option	
Blank	Without indicator lamp
1N	100/200 VAC with indicator lamp
3N	24 VDC with indicator lamp
T	Without pressure gauge

Dimensions

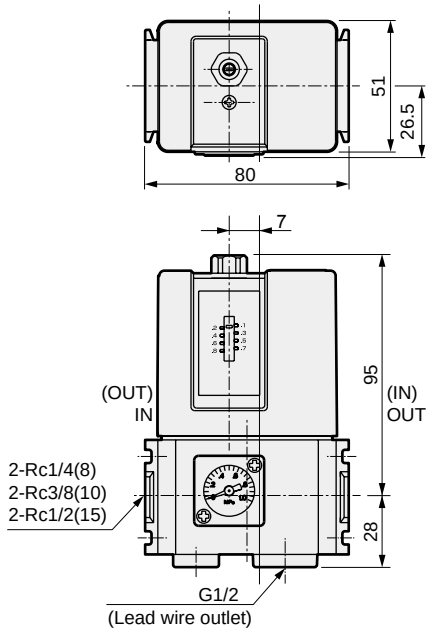

Refer to the modular design F.R.L. for specifications, internal structure diagram, and safety precautions.



Reed switch compact mechanical pressure switch

P1100/P4100/P8100-UN- Series

Compatible with module connection to F.R.L.

P1100 Interface 28 mm
P4100 Interface 31.5 mm
P8100 Interface 50 mm
Customized only

JIS symbol 

RoHS CAD

How to order (modular design)

P 4100 - UN - 6 L - W - 3

(White type)

Ⓐ Series model No.
Ⓑ Port size
Ⓒ Branch direction
Ⓓ Length of lead wire

* Dedicated model No. for customized combinations. Components cannot be purchased individually.

Code	Description
Ⓐ Series model No.	
1100	For 1000 Series
4100	For 2000, 3000, and 4000 Series
8100	For 6000 and 8000 Series

Ⓑ Port size

		1100	4100	8100
6	Rc1/8	●		
8	Rc1/4	●	●	
10	Rc3/8		●	
15	Rc1/2		●	
20	Rc3/4			●
25	Rc1			●

Ⓒ Branch direction *1

Blank *2	L	R
		

Ⓓ Length of lead wire

Blank	1 m
3	3 m
5	5 m

⚠ Precautions for model No. selection

*1: This is used for intermediate connection of the module series so the module connection section is not threaded.
*2: A plug matching the port size is included.

Dimensions

● P1100

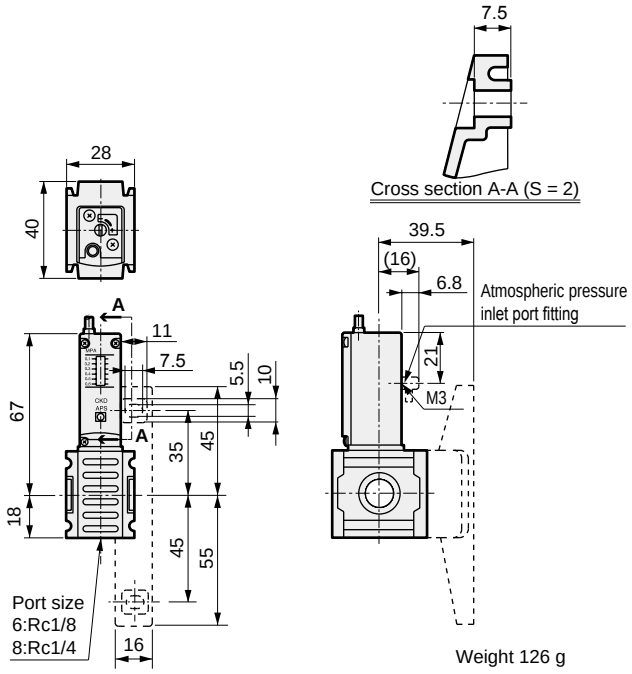

Weight 126 g

● P4100

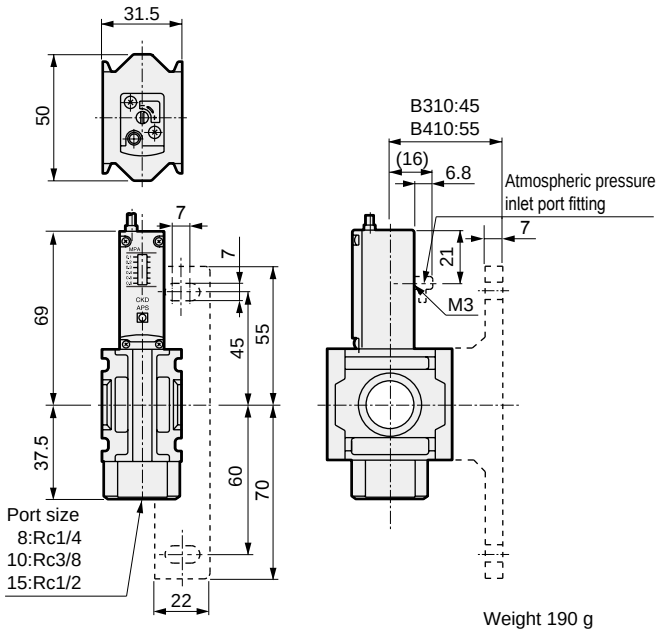

Weight 190 g

● P8100

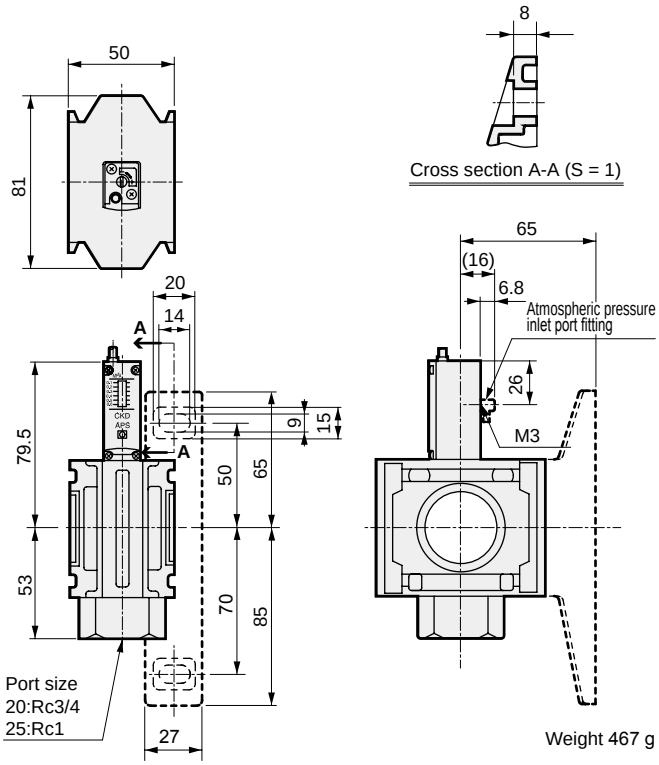

Weight 467 g

Refer to the modular design F.R.L for specifications and safety precautions.

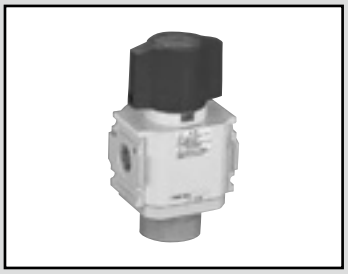

Residual pressure exhaust valve Standard White Series

V1000/V3000-W Series

One action exhaust operation. Ideal for preventing accidents due to residual pressure in pneumatic lines.

Port size: Rc1/8 to Rc1/2

JIS symbol

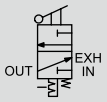

RoHS CAD V1000 Interface 40 mm V3000 Interface 63 mm

How to order

V3000 - 8 - W - X1 - S

- V3000: Ⓐ Model No.
- 8: Ⓑ Port size
- W: (White type)
- X1: Ⓒ Option
- S: Ⓓ Attachment

⚠ Select the reverse regulator (R*100-W) or reverse filter regulator (W*100-W) when installing the V*000-W onto the primary side of the regulator or filter regulator.

Code	Description		
Ⓐ Model No.			
V1000	For 1000 Series		
V3000	For 2000, 3000, 4000 Series		
Ⓑ Port size			
		V1000	**V3000**
6	Rc1/8	●	
8	Rc1/4	●	●
10	Rc3/8		●
15	Rc1/2		●
Ⓒ Option			
Blank	None		
X1	IN/OUT reverse flow (right to left)		
Ⓓ Other attachments			
Blank	Not included		
S	Silencer		

Dimensions

● V1000

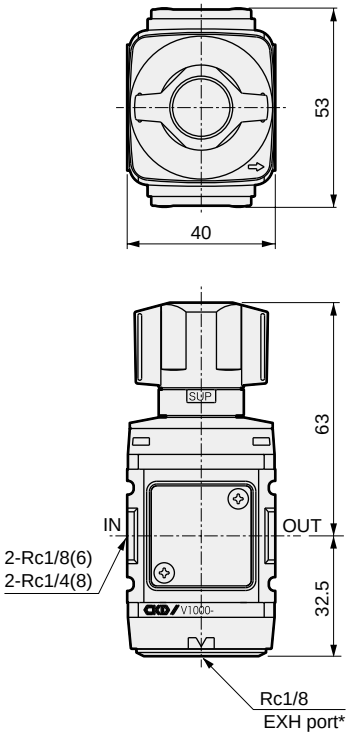

*The EXH port is dedicated for silencer mounting.

● V3000

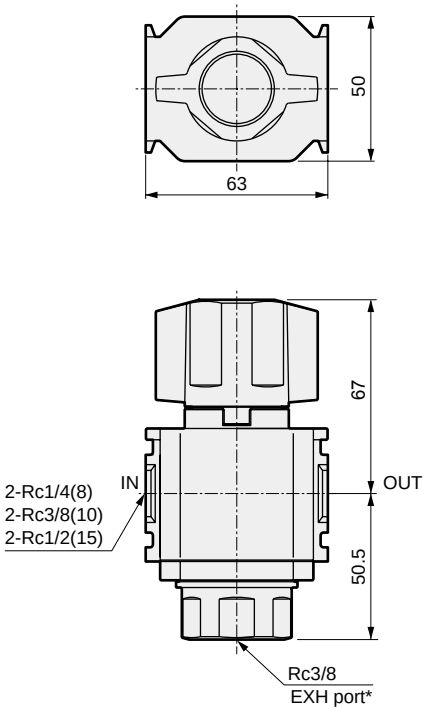

*The EXH port is dedicated for silencer mounting.

Refer to the modular F.R.L. for specifications and internal structure diagram.

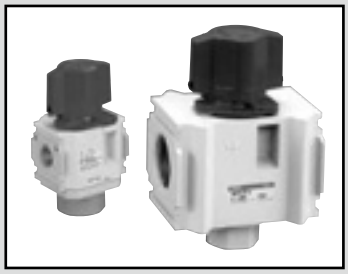

Residual pressure exhaust valve with locking hole (OSHA compliant)

V3010-W/V6010-W Series

Ideal for preventing accidents due to residual pressure in pneumatic lines.
Port size: Rc1/4 to Rc1

JIS symbol

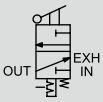

RoHS CAD V3010 Interface 63 mm V6010 Interface 90 mm

OSHA (Occupational Safety and Health Administration)

Establishes safety standards for employees, as well as US safety standards.

[Lockout/Tagout Regulation]
When serving or maintaining machinery, the air source shall be closed with a shut-off valve (residual pressure exhaust valve), and residual pressure shall be discharged. If a third party inadvertently operates the valve during such operation and compressed air is applied, the cylinder, etc., could move suddenly and injure personnel. This standard states that, "All valves used for such purposes shall have a key or a structure which can be locked with a key."

How to order

V3010 - 8 - W - X1 - S

- V3010 — Ⓐ Model No.
- 8 — Ⓑ Port size
- W — (White type)
- X1 — Ⓒ Option
- S — Ⓓ Attachment *2

Code	Description	Ⓐ Model No. V3010	Ⓐ Model No. V6010
Ⓑ Port size			
8	Rc1/4	●	
10	Rc3/8	●	
15	Rc1/2	●	
20	Rc3/4		●
25	Rc1		●
Ⓒ Option			
Blank	None	●	●
X1	IN/OUT reverse flow (right → left)	●	●
Ⓓ Other attachments			
Blank	No included products	●	●
S	Silencer	●	●

Precautions for model No. selection

*1: Contact CKD for locking at the air supply position.
*2: The silencer element is not made of flame-resistant resin.

⚠ Select the reverse regulator (R*100-W) or reverse filter regulator (W*100-W) when installing the V*010-W onto the primary side of the regulator or filter regulator.

Usage methods

● Regular use

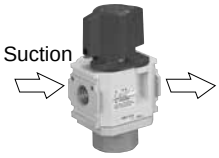

● During maintenance work
The component can be locked when residual pressure is released.

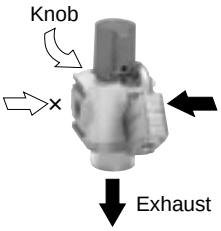

Dimensions

● V3010

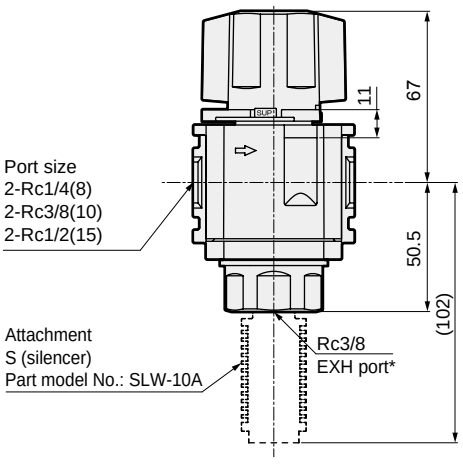

● V6010

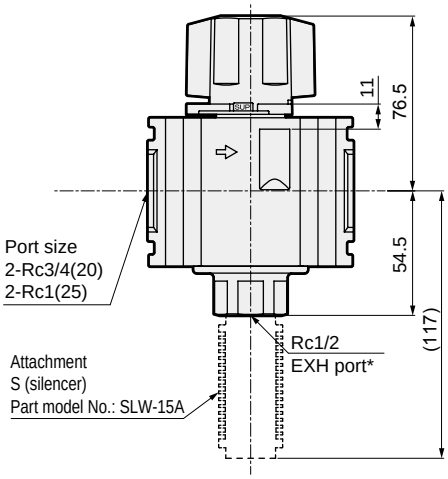

*The EXH port is dedicated for silencer mounting.

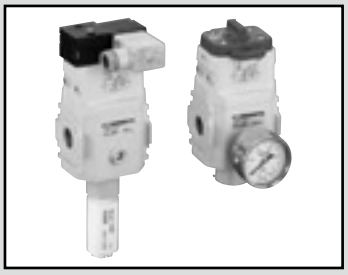

Slow start valve Standard White Series

V3301-W/V3321-W Series

Ensuring safety
when starting and stopping.

● Port size:
Rc1/4 to Rc1/2

JIS symbol

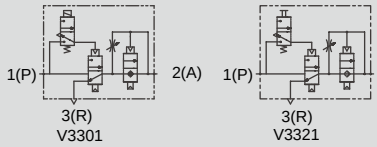

RoHS CAD Interface 63 mm

How to order

● Solenoid valve: V3301 - 08 - W - ( ) ( ) - 1 — S
(White type)

● Manual: V3321 - 08 - W ——— S

Ⓐ Port size
Ⓑ Manual operation
Ⓒ Electrical connections
Ⓓ Voltage
Ⓔ Other attachments

Code	Description	
Ⓐ Port size		
1(P)/2(A) port		
08	Rc1/4	
10	Rc3/8	
15	Rc1/2	
Ⓑ Manual operation		
Blank	Non-locking	
M1	Locking	
Ⓒ Electrical connections		
Blank	Grommet lead wire	
S	Grommet lead wire with surge suppressor	
B	Terminal box	
LS	Terminal box surge suppressor/lamp	
Ⓓ Voltage		
1	100 VAC 50/60 Hz	Standard
2	200 VAC 50/60 Hz	Standard
3	24 VDC	Option
4	12 VDC	Option
5	110 VAC 50/60 Hz	Option
6	220 VAC 50/60 Hz	Option
Ⓔ Other attachments		
Blank	None	
G49P	Pressure gauge: G49D-8-P10	
S	Silencer	

⚠ Select the reverse regulator (R*100-W) or reverse filter regulator (W*100-W) when installing the V3301-W, V3321-W onto the primary side of the regulator or filter regulator.

Dimensions

● V3301-W

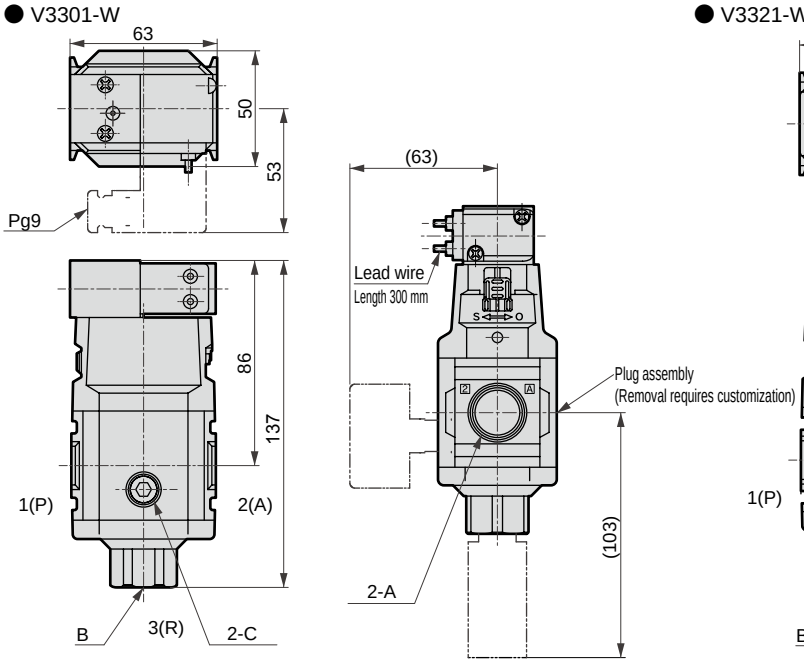

● V3321-W

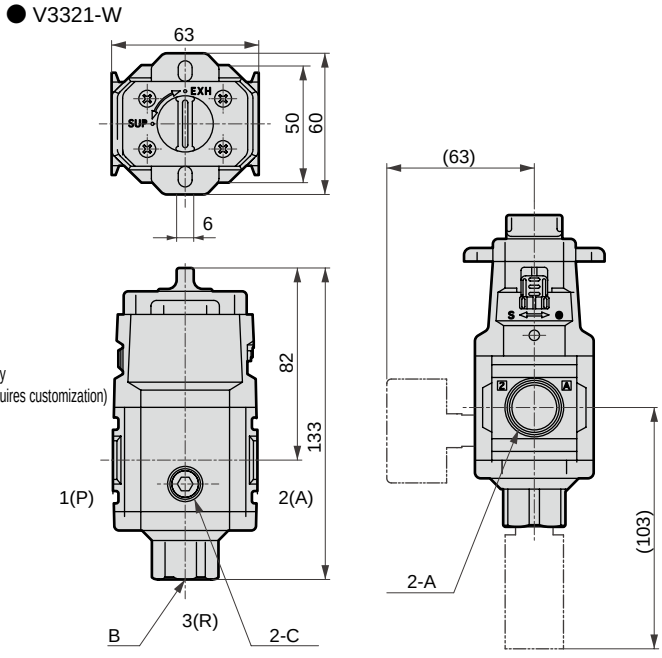

	A	B	C
V3301-08-W	Rc1/4	Rc3/8	Rc1/4
V3301-10-W	Rc3/8		
V3301-15-W	Rc1/2		

	A	B	C
V3321-08-W	Rc1/4	Rc3/8	Rc1/4
V3321-10-W	Rc3/8		
V3321-15-W	Rc1/2		

Refer to the modular F.R.L. for specifications and internal structure diagram.

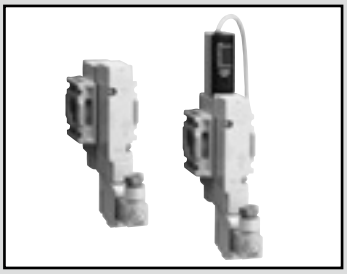

Shut-off 3-port solenoid valve

CXU30-VE-UN Series

Shut-off 3-port solenoid valve
capable of modular connection
with 2000, 3000, and 4000 Series

JIS symbol

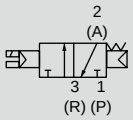

RoHS

Interface 45 mm

Customized only

How to order

CXU30 - VE - UN - 00 - P X1 - E20 S - 3

Ⓐ Model No.

Ⓑ Pressure switch option

Ⓒ Flow direction option

Ⓓ Electrical connections

Ⓔ Option

Ⓕ Rated voltage

* Dedicated model No. for customized combinations.
Components cannot be purchased individually. Refer to page 1021 for the model No. of your order.

Model No.

Code	Description
Ⓑ Pressure switch option	
Blank	Without pressure switch
P	With pressure switch
Ⓒ Flow direction option	
Blank	Standard flow (left → right)
X1	Reverse flow (right → left)
Ⓓ Electrical connections	
B	DIN terminal box (Pg7) with surge suppressor/light
E20	E type connector lead wire (500 mm) with surge suppressor/light
B2	DIN terminal box with M12 connector cable (300 mm) with surge suppressor/light *1
Ⓔ Option	
Blank	None
S	Silencer (SLW-8L) attached
Ⓕ Rated voltage	
1	100 VAC (rectifier integrated)
3	24 VDC

⚠ Precautions for model No. selection

*1: Only the rated voltage [3] is available for the electrical connection [B2].
*2: The length of the lead wire for the pressure switch is 1 m.
*3: The product comes with a fitting for the atmospheric pressure inlet port of the pressure switch.

Dimensions

● E type connector

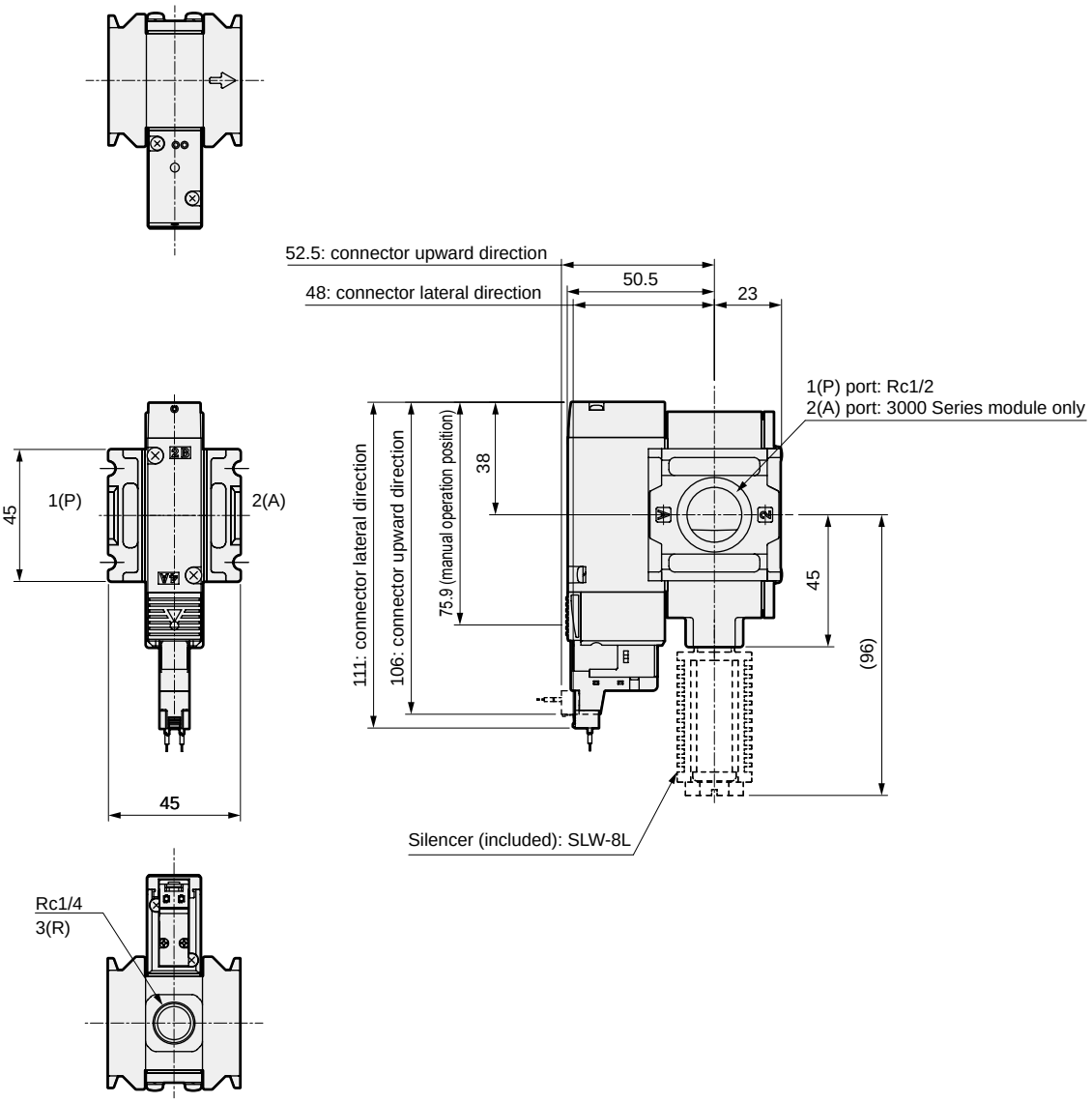

● DIN terminal box B

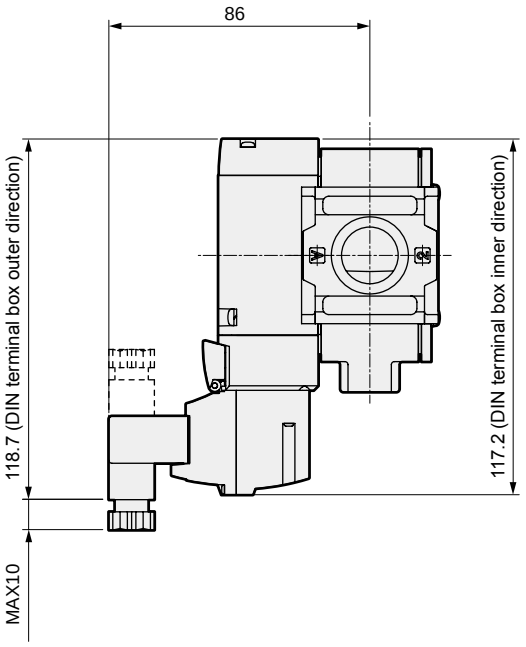

● Flow direction X1

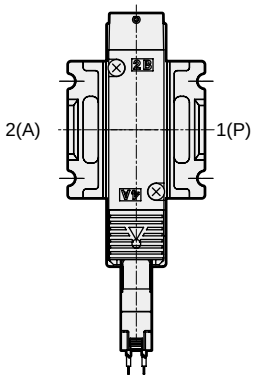

● Pressure switch P

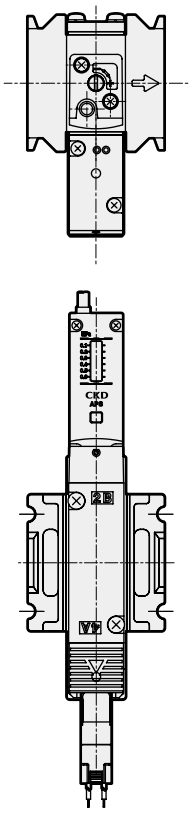

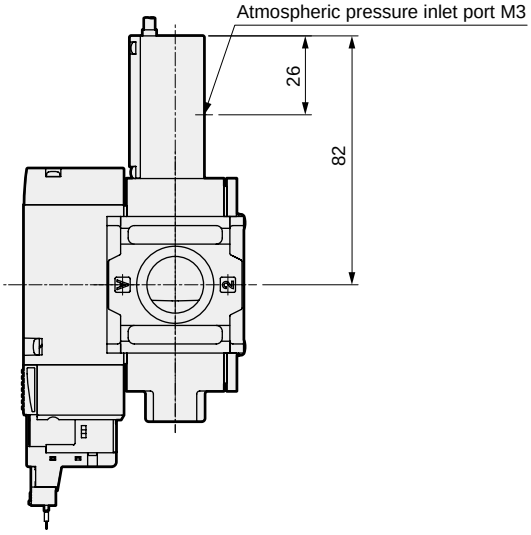

● DIN terminal box with M12 connector cable B2 / Pressure switch P-B2

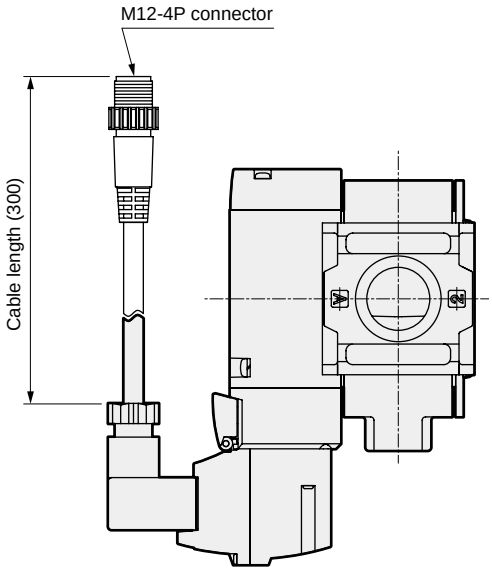

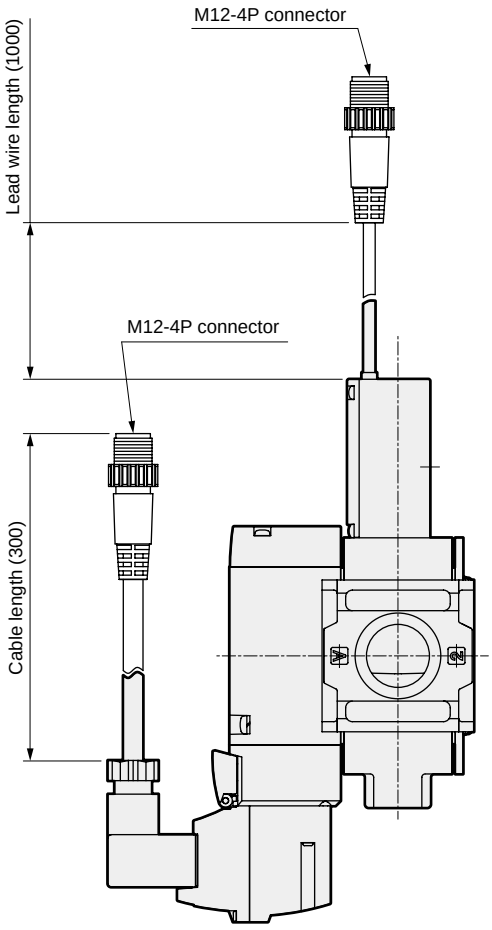

Pin array (common to DIN terminal box and pressure switch)

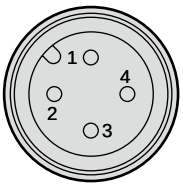

PIN No.	Applications
1PIN	(Not used)
2PIN	(Not used)
3PIN	Power supply -
4PIN	Power supply +

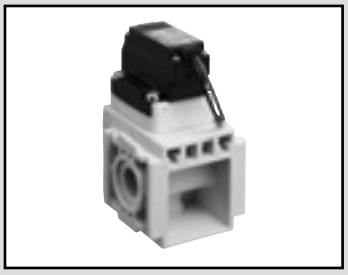

Pilot operated 2-port solenoid valve for compressed air

CXU10-EXA-UN Series

NC, diaphragm drive
Modular connection with 1000 Series enabled
Ideal for modular component blow valves

JIS symbol

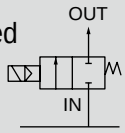

RoHS CAD

No thread, open
Customized only
Expandable
Interface 40 mm

How to order

CXU10-EXA - UN - C6 - 2C - 1

- A Port size (OUT)
- B Coil option
- C Voltage

* Dedicated model No. for customized combinations.
Components cannot be purchased individually.
Refer to page 1026 for the model No. of your order.

Code	Description
A Port size (OUT)	
C6	ø6 push-in fitting
CL6	Radial ø6 push-in fitting
C8	ø8 push-in fitting
CL8	Radial ø8 push-in fitting
B Coil option *1	
2C	Standard: Lead wire (without lamp/surge suppressor)
2H	Option: DIN terminal box (Pg7), with lamp (inside terminal box)
2HS	Option: DIN terminal box (Pg7), with lamp/ surge suppressor (inside terminal box)
C Voltage *1	
1	100 VAC 50/60 Hz
3	24 VDC

*1: Refer to the table on the left for the available coil option and voltage combinations.
*2: When using with an extremely small flow rate or when the solenoid valve's secondary side is restricted, set the pressure so that the pressure difference does not fall below 0.01 MPa with the valve opened. (Refer to precautions on page 104.) Contact CKD if the differential pressure before/after the solenoid valve with the valve opened is small.

Precautions for model No. selection

Coil option	Voltage 1	Voltage 3
2C	●	●
2H	●	
2HS		●

Select from the combinations indicated with ● above.

Dimensions

● Grommet lead wire
CXU10-EXA-UN-*-2C-*
Cartridge fitting: Straight

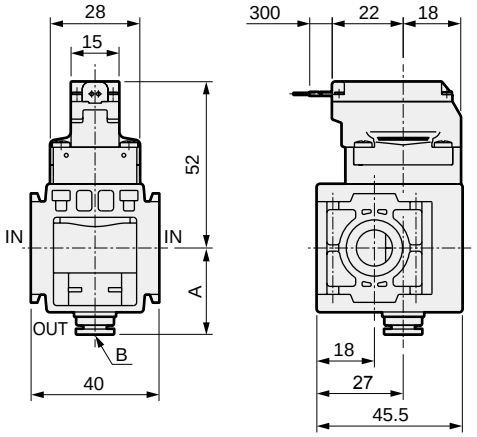

Cartridge fitting: Elbow

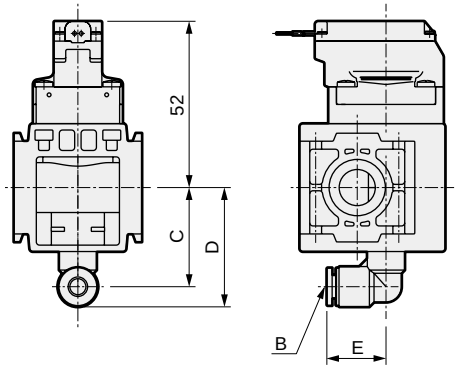

● With DIN terminal box (Pg7) type
CXU10-EXA-UN-*-2HS-*

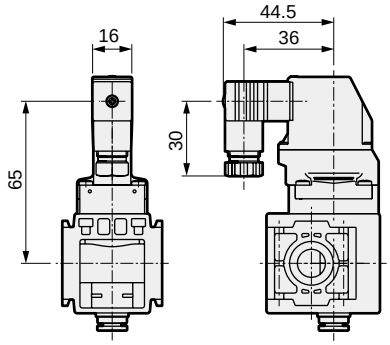

Optional dimensions table

Option	A	B	C	D	E
C6	27	Push-in fitting ø6	-	-	-
CL6	-	Push-in fitting ø6	31	37	18.5
C8	27	Push-in fitting ø8	-	-	-
CL8	-	Push-in fitting ø8	32	39	21

Refer to air unit components on pages 1026 and 1027 for specifications and internal structure diagram.

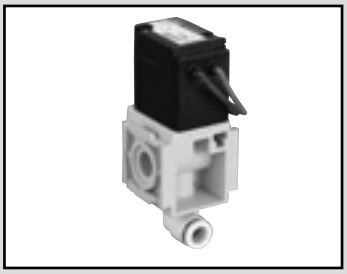

Direct acting 2-port solenoid valve

CXU10-FAB3-UN Series

NC (open when energized)
Modular connection with 1000 Series enabled
Ideal for modular component blow valves

JIS symbol

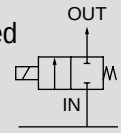

No thread, open

Interface 40 mm

Customized only

How to order

CXU10-FAB3 - UN - C6 - 2C - 3

- A Port size (OUT)
- B Coil option
- C Rated voltage

Code	Description
A Port size (OUT)	
C6	ø6 push-in fitting
CL6	Radial ø6 push-in fitting
C8	ø8 push-in fitting
CL8	Radial ø8 push-in fitting
B Coil option	
2C	Grommet lead wire
2HS	DIN terminal box with lamp/surge suppressor (Pg11)
C Rated voltage	
1	100 VAC 50/60 Hz, 110 VAC 60 Hz
3	24 VDC

* Dedicated model No. for customized combinations.
Components cannot be purchased individually.
Refer to page 1028 for the model No. of your order.

Dimensions

● Grommet lead wire
CXU10-FAB3-UN-*-2C-*
Cartridge fitting: Straight

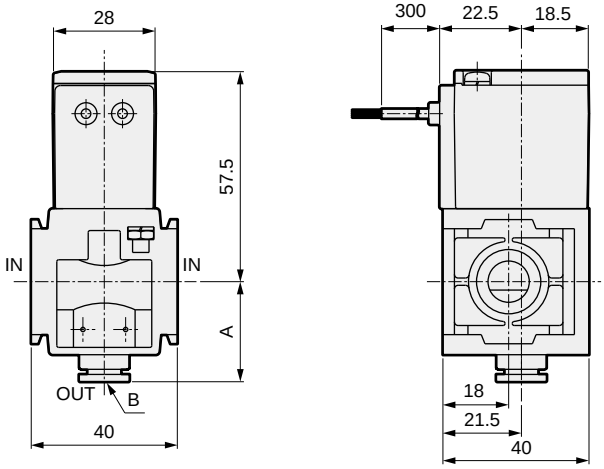

Cartridge fitting: Elbow

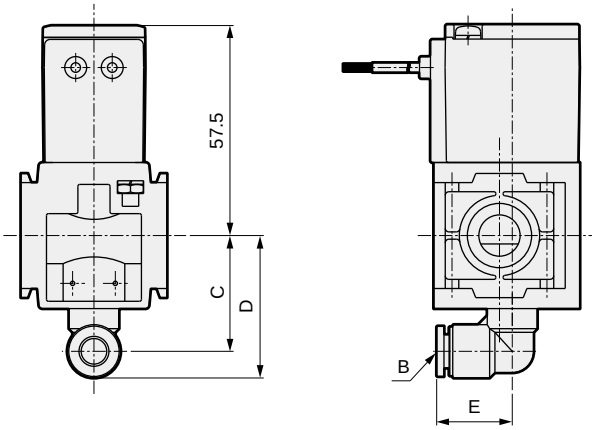

● With DIN terminal box (Pg11) type
CXU10-FAB3-UN-*-2HS-*

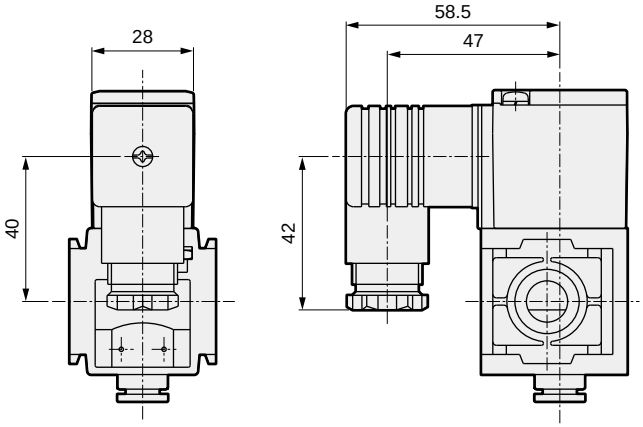

Optional dimensions table

Option	A	B	C	D	E
C6	27	Push-in fitting ø6	-	-	-
CL6	-	Push-in fitting ø6	31	37	18.5
C8	27	Push-in fitting ø8	-	-	-
CL8	-	Push-in fitting ø8	32	39	21

Refer to air unit components on pages 1028 and 1029 for specifications and internal structure diagram.



Direct acting 2-port solenoid valve

CXU30-FAB4U-UN Series

NC (open when energized)
Modular connection with
2000, 3000, and 4000 Series enabled
Ideal for modular component blow valves

RoHS CAD

JIS symbol

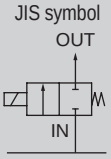

Interface 50 mm

No thread release

Customized only

How to order

CXU30-FAB4U-UN-8L - 2C - 3

Ⓐ Coil option

Ⓑ Rated voltage

* Dedicated model No. for customized combinations. Components cannot be purchased individually. Refer to page 1030 for the model No. of your order.

Code	Description
Ⓐ Coil option	
2C	Grommet lead wire
2HS	DIN terminal box with lamp/surge suppressor (Pg11)
Ⓑ Rated voltage	
1	100 VAC 50/60 Hz, 110 VAC 60 Hz
3	24 VDC

Dimensions CAD

● Grommet lead wire

CXU30-FAB4U-UN-8L-2C-*

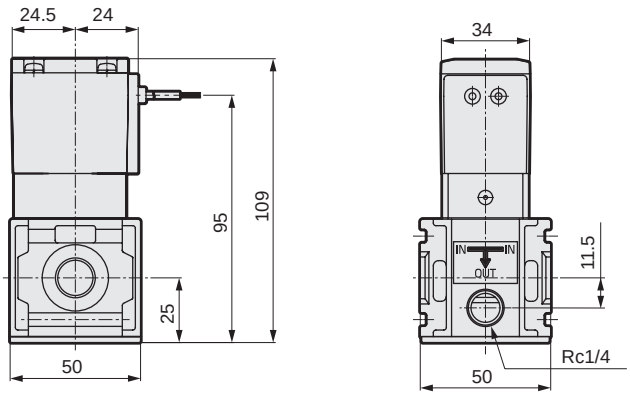

● With DIN terminal box (Pg11) type

CXU30-FAB4U-UN-8L-2HS-*

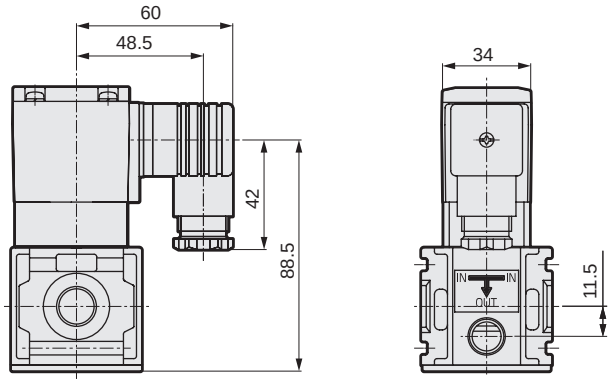

Refer to air unit components on pages 1030 and 1031 for specifications and internal structure diagram.



Pilot kick 2-port solenoid valve

CXU30-ADK-UN Series

NC (open when energized)
diaphragm drive
Modular connection with 2000, 3000, and 4000 Series enabled
Suitable for modular component master valve

JIS symbol

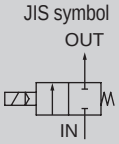

RoHS CAD Interface 63 mm Customized only

How to order

CXU30-ADK-UN-00-F 2C-1

A Sealant

* Dedicated model No. for customized combinations. Components cannot be purchased individually. Refer to page 1032 for the model No. of your order.

B Coil option

C Rated voltage

Code	Description	
A Sealant		
Blank	Nitrile rubber	
F	Fluoro rubber	
B Coil option		
2C	Grommet lead wire	*1
2HS	DIN terminal box with lamp/surge suppressor (Pg11)	
C Rated voltage		
1	100 VAC 50/60 Hz,110 VAC 60 Hz	
3	24 VDC	

*1: The coil option 2C is available for rated voltage [1] only.

Dimensions CAD

● Grommet lead wire
CXU30-ADK-UN-00-*2C-*

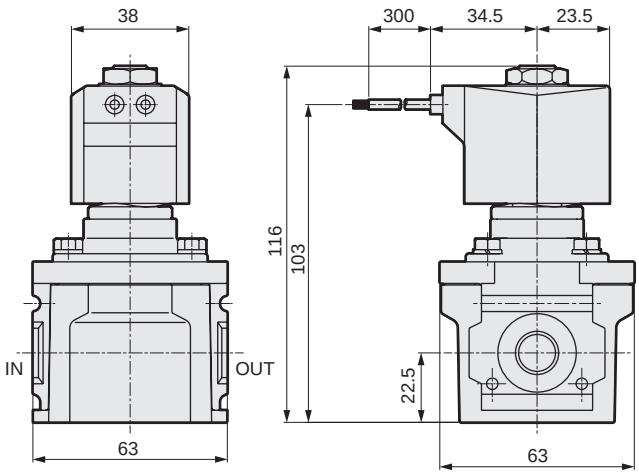

● With DIN terminal box (Pg11)
CXU30-ADK-UN-00-*2HS-*

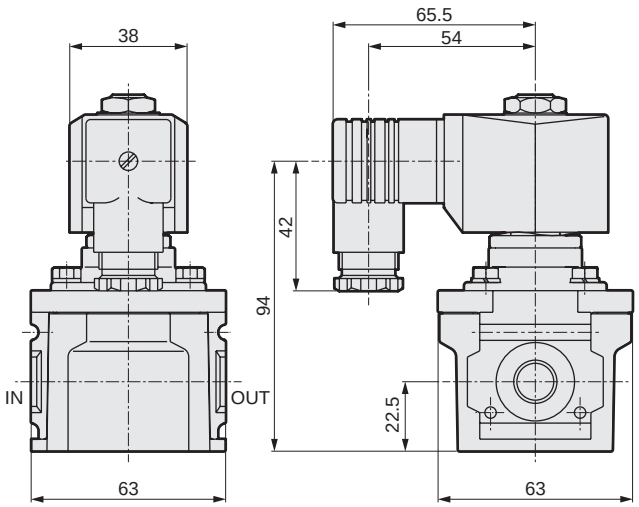

Refer to air unit components on pages 1032 and 1033 for specifications and internal structure diagram.

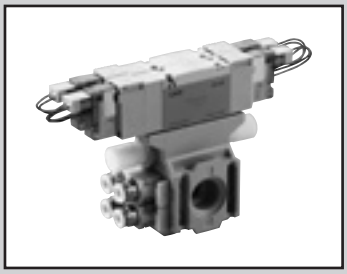

Pilot operated 5-port valve

CXU30-4G2R-UN Series

5-port solenoid valve for modular connection with 2000, 3000, 4000 Series

Interface 56 mm

RoHS CAD Customized only No thread release

How to order

CXU30-4G2R-UN- 3 3 - C6 - E20 S - 3

Ⓐ Model No.

Ⓑ Solenoid valve (1) switching position *2, *4, *5

Ⓒ Solenoid valve (2) switching position *2, *4, *5

Ⓓ Port size (OUT)

Ⓔ Electrical connections

Ⓕ Option

Ⓖ Rated voltage

* Dedicated model No. for customized combinations. Components cannot be purchased individually. Refer to page 1035 for the model No. of your order.

Code	Description
Ⓑ Solenoid valve (1) switching position	
0	Without solenoid valve: Masking plate
1	2-position single; with exhaust check valve
2	2-position double; with exhaust check valve
3	3-position all ports closed
4	3-position ABR connection; with exhaust check valve
5	3-position PAB connection
Ⓒ Solenoid valve (2) switching position	
0	Without solenoid valve: Masking plate
1	2-position single; with exhaust check valve
2	2-position double; with exhaust check valve
3	3-position all ports closed
4	3-position ABR connection; with exhaust check valve
5	3-position PAB connection
Ⓓ Port size (OUT)	
C4	ø4 push-in fitting
C6	ø6 push-in fitting
CL6	ø6 radial push-in fitting (facing rear)
C8	ø8 push-in fitting
Ⓔ Electrical connections	
B	DIN terminal box (Pg7) with surge suppressor/lamp
E20	E-connector lead wire (500 mm) with surge suppressor/lamp
Ⓕ Option	
Blank	None
S	Two silencers (SLW-8S) attached
Ⓖ Rated voltage	
1	100 VAC (rectifier integrated)
3	24 VDC

Precautions for model No. selection

*1: The fitting that can be mounted on the R1 port is the same as GWS□-8-S.
*2: The exhaust check valve is provided as standard. 3-position all ports closed and PAB connection are not provided with the exhaust check valve. For the exhaust check valve, refer to page 106.
*3: For solenoid valves (1) (2), if the port size, electrical connection, option or voltage is changed, it is processed as a customized product.
*4: Refer to dimensions for positions of solenoid valves (1) and (2).
*5: When masking plates are used for all solenoid valves, electrical connections and rated voltage options are blank.

Refer to page 1039 for the solenoid valve model No. list.

JIS symbol

2-position single

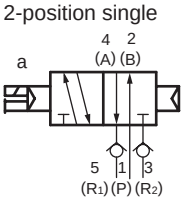

2-position double

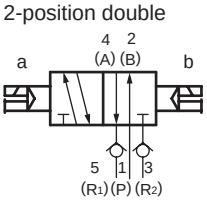

3-position all ports closed

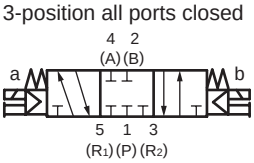

3-position ABR connection

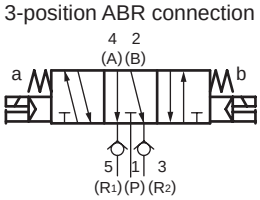

3-position PAB connection

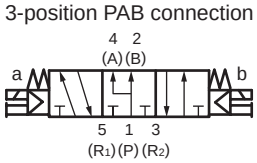

Refer to air unit components on pages 1034 and 1036 for specifications and internal structure diagram.

Dimensions

CXU30-4G2R-$^{0}_{1}$

● E-connector
Cartridge fitting: Straight

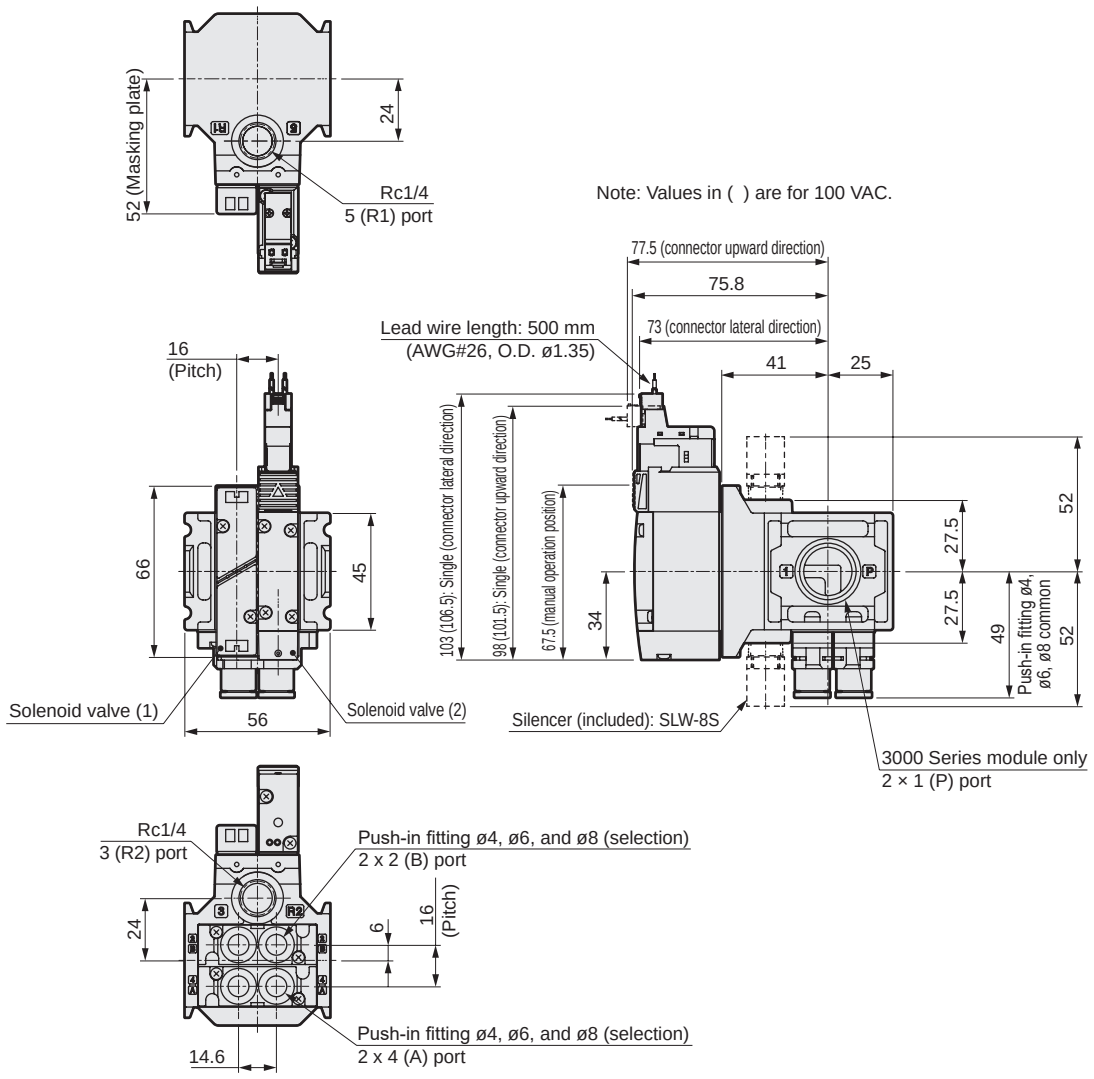

● DIN terminal box (B)
Cartridge fitting: Straight

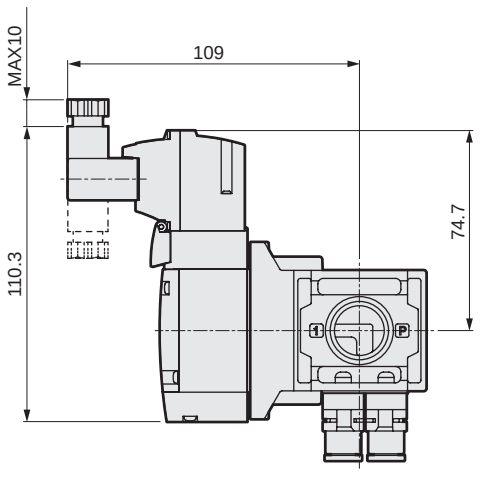

Note: DIN terminal box assembly is shipped facing inward.

● ø6 radial push-in fitting (facing rear)

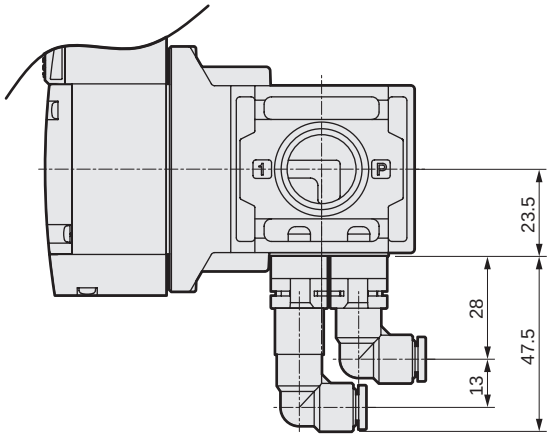

Dimensions

CXU30-4G2R-$^{2}_{3}$ ^{4} ^{5}

● E-connector
Cartridge fitting: Straight

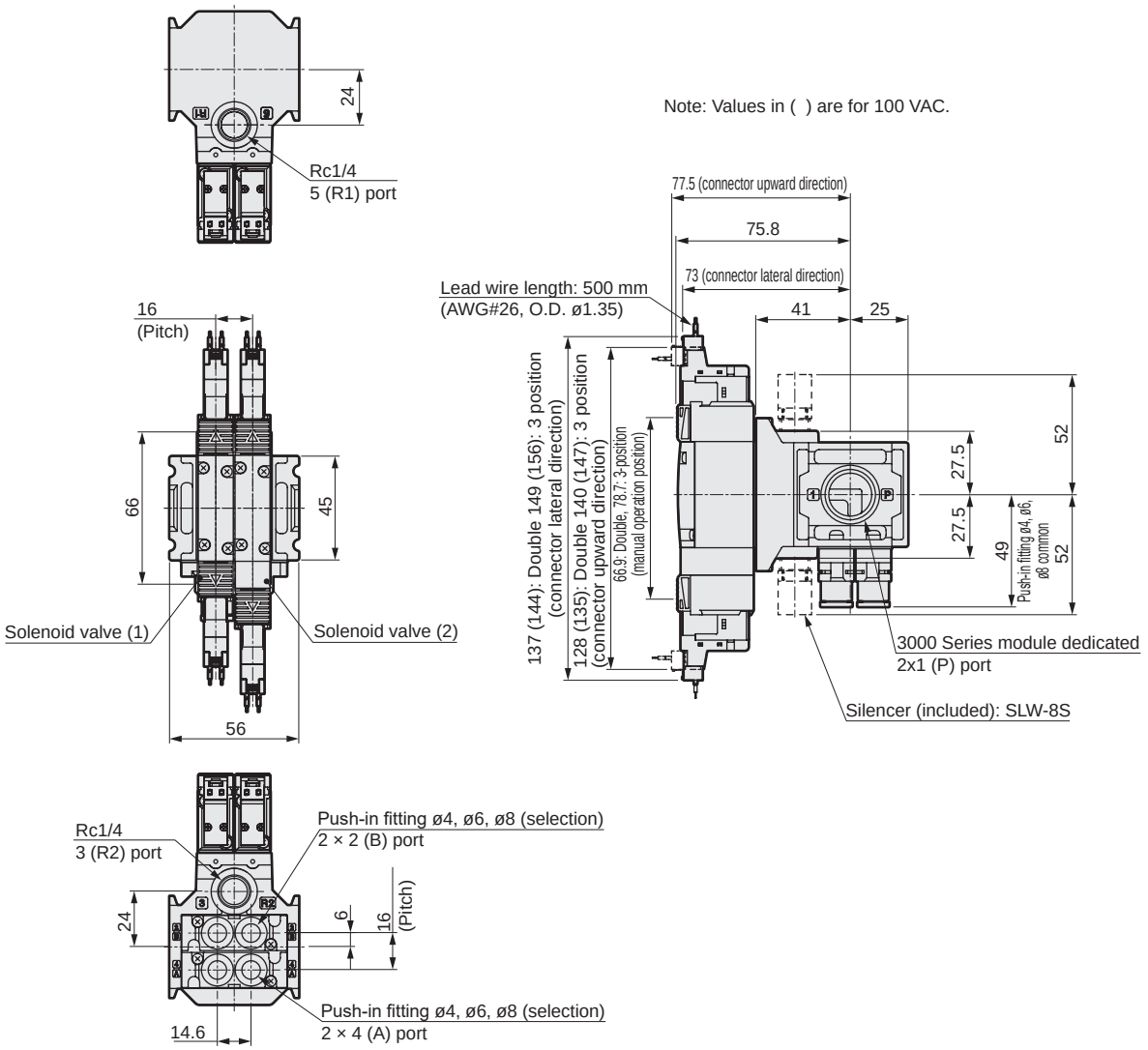

● DIN terminal box (B)
Cartridge fitting: Straight

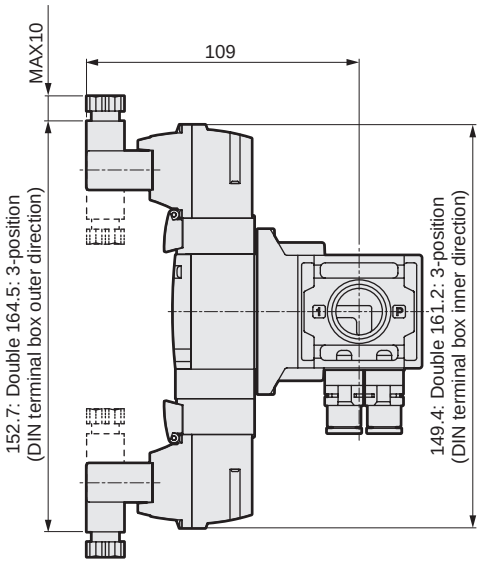

Note: DIN terminal box assembly is shipped facing inward.

● ø6 radial push-in fitting (facing rear)

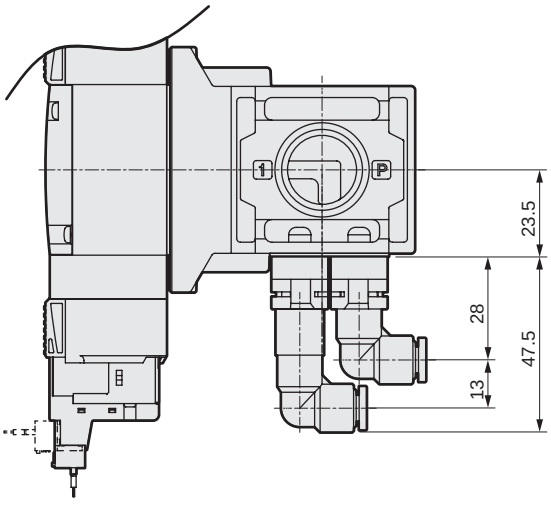

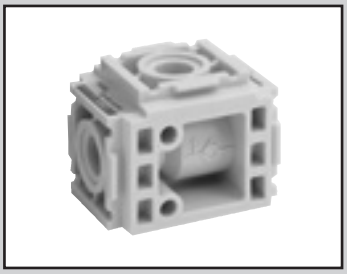

Module check valve

CXU10-CHV-UN Series

Completely prevents reverse flow of fluid such as compressed air.
Enabling modular connection
with F.R.L. 1000 Series
Intermediate extraction of air with branching port

JIS symbol

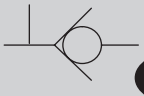

RoHS CAD Interface 56 mm Customized only

How to order

CXU10-CHV - UN - 00 - 6 - A - X1

Ⓐ Port size
Ⓑ Option
Ⓒ Flow direction

Code	Description
Ⓐ Port size	
6	Pipe adaptor (Rc1/8") assembled
8	Pipe adaptor (Rc1/4") assembled
10	Pipe adaptor (Rc3/8") assembled
MA	Masking adaptor assembled
Ⓑ Option	
Blank	No option
A	Fluoro rubber specifications
Ⓒ Flow direction	
Blank	Standard flow (left → right)
X1	Reverse flow (right → left)

*1 Dedicated model No. for customized combinations. Components cannot be purchased individually. Refer to page 1040 for the model No. of your order.
*2 The pipe adaptor and masking adaptor are mounted facing upward from the product front.

Dimensions

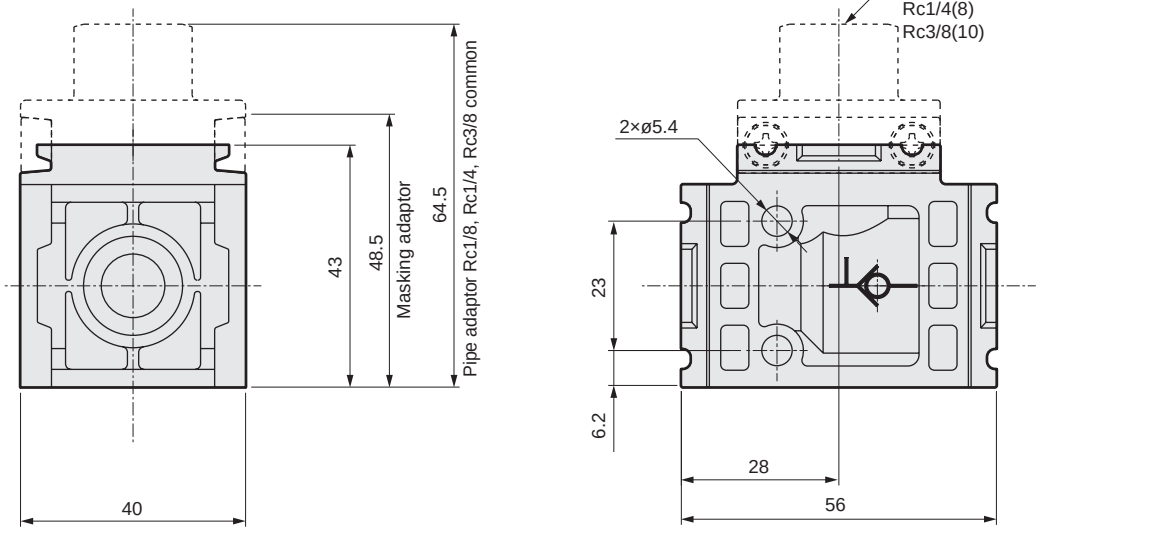

Refer to air unit components on pages 1040 and 1041 for specifications and internal structure diagram.

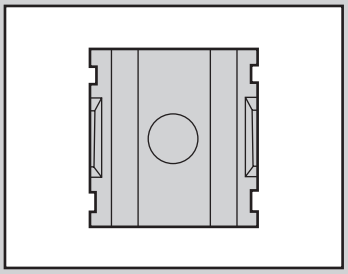

Distributor Standard White Series

D101/D401/D801-UN-W/D300-W Series

Compatible with pipe branching.
Port size: Rc1/8 to Rc1

D101 Interface 28 mm
D401 Interface 31.5 mm
D801 Interface 50 mm
D300 Interface 42 mm

RoHS CAD

How to order

D101 - UN - 00 - 6 - W

- D101: Ⓐ Model No.
- 6: Ⓑ Port size
- W: (White type)

Code	Description
Ⓐ Model No.	
D101	For 1000 Series
D401	For 2000, 3000, and 4000 Series
D801	For 6000 and 8000 Series

Ⓑ Port size		D101	D401	D801
6	Rc1/8	•		
8	Rc1/4	•	•	
10	Rc3/8		•	
15	Rc1/2		•	
20	Rc3/4			•
25	Rc1			•

D300 - 8 - W - Q

- D300: Distributor
- 8: Ⓐ Port size
- W: (White type)
- Q: Ⓑ Option

Code	Description
Ⓐ Port size	
8	Rc1/4
10	Rc3/8
Ⓑ Option	
Blank	None
Q	2 each of R1/4 pipe plug, R3/8 pipe plug attached

Dimensions

● D101-UN-00

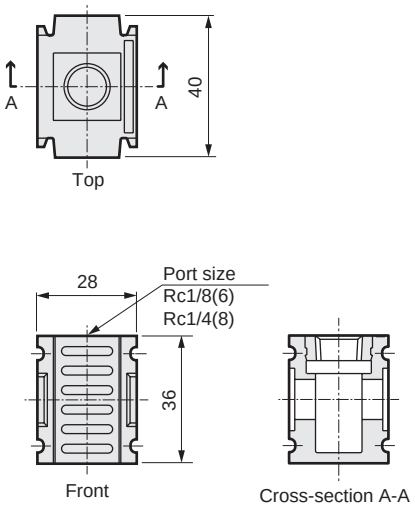

● D401-UN-00

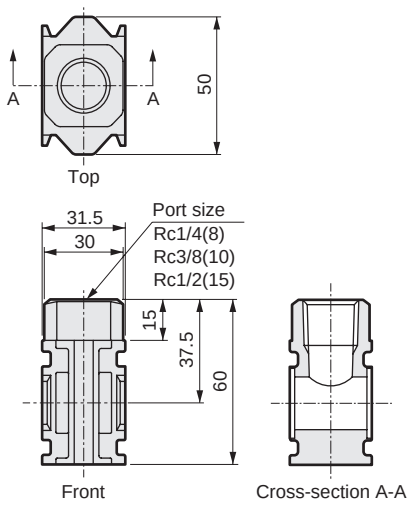

● D801-UN-00

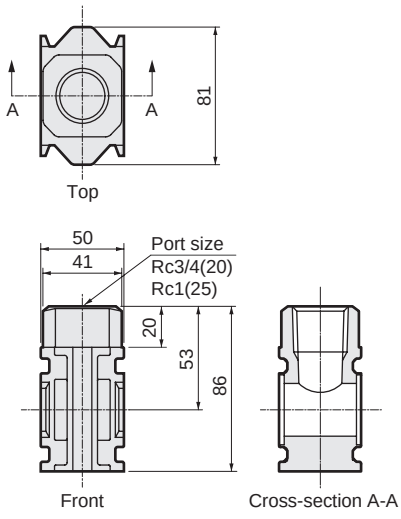

Dimensions

● D300

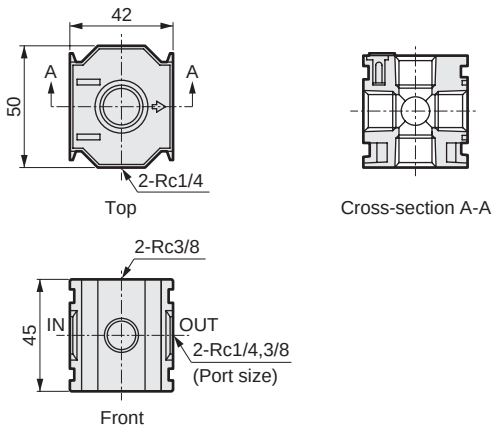

Application examples (D101-00-W, D401-00-W, D801-00-W)



CKD

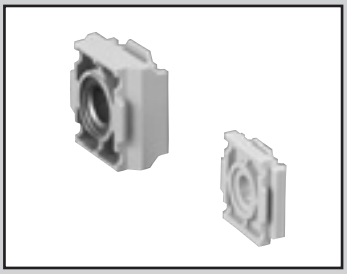

Turn adaptor

CXU10-TA-UN/CXU30-TA-UN Series

Rotates module fitting section by 90 degrees.
Direction of module components can be changed.

No thread open

RoHS CAD Customized only

How to order

CXU10 - TA - UN - 00

Ⓐ Model No.

Code	Description
Ⓐ **Model No.**	
CXU10	1000 Series
CXU30	3000 Series

* Dedicated model No. for customized combinations.
Components cannot be purchased individually.
Refer to page 1044 for the model No. of your order.

Usage methods



Precautions for model No. selection

*1: CXU30-TA can be connected to 2000 Series, 3000 Series, and 4000 Series.

Internal structure and parts list/dimensions

● CXU10-TA-UN

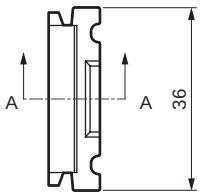

Top

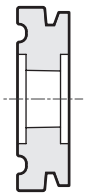

Cross-section A-A

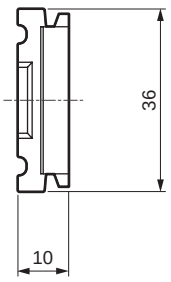

Front

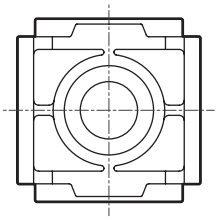

Side

● CXU30-TA-UN

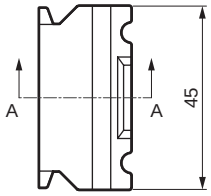

Top

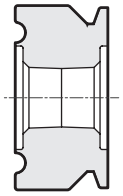

Cross-section A-A

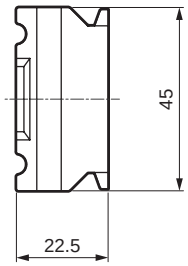

Front

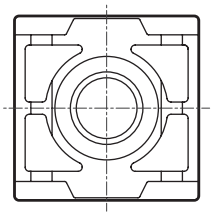

Side

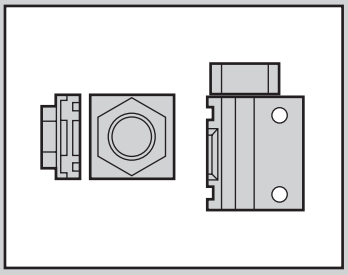

Pipe adaptor/L type pipe adaptor Standard White Series

A100/A400/A800-UN-W Series
A101/A401/A801-UN-W Series

Port size: Rc1/8 to Rc1 / Rc1/4 to Rc1

RoHS CAD Customized only

Dimensions and applications

* Dedicated model No. for customized combinations. Components cannot be purchased individually.

Pipe adaptor

● Model No.: A100-UN-6, 8, 10-W
A400-UN-8, 10, 15, 20-W
A800-UN-20, 20, 32-W

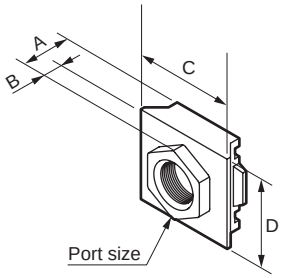

● Applications



Model No.	Port size	Compatible series	A	B	C	D	Others
A100-UN-6-W	Rc1/8	1000 Series	21.5	13.5	40	36	-
A100-UN-8-W	Rc1/4						
A100-UN-10-W	Rc3/8						
A400-UN-8-W	Rc1/4	2000 and 3000 Series / 4000 Series	20 (25)	6 (11)	50	45	Numbers shown in ( ) are for Rc3/4
A400-UN-10-W	Rc3/8						
A400-UN-15-W	Rc1/2						
A400-UN-20-W	Rc3/4						
A800-20-W	Rc3/4	6000 8000 Series	35 (38)	15 (18)	81	66	Numbers shown in ( ) are for 1 1/4.
A800-25-W	Rc1						

L type pipe adaptor

How to order

A101 - UN - 6 - W

(White type)

Ⓐ Model No.

Ⓑ Port size

Code	Description
Ⓐ Model No.	
A101	For 1000 Series
A401	For 2000, 3000, and 4000 Series
A801	For 6000 and 8000 Series

Ⓑ Port size

		A101	A401	A801
6	Rc1/8	●		
8	Rc1/4	●	●	
10	Rc3/8		●	
15	Rc1/2		●	
20	Rc3/4			●
25	Rc1			●

● Applications



Dimensions

● A101-UN

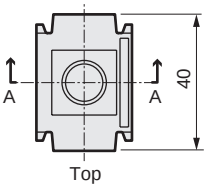

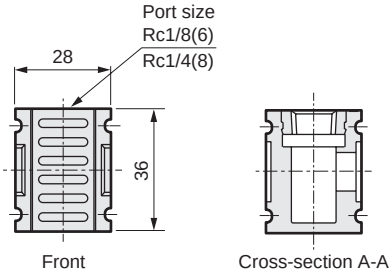

● A401-UN

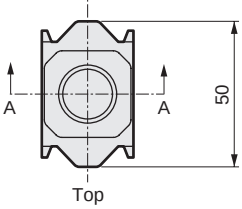

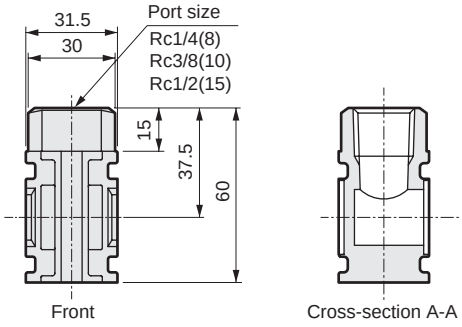

● A801-UN

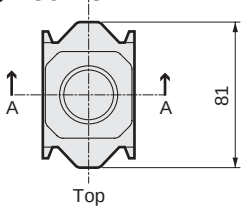

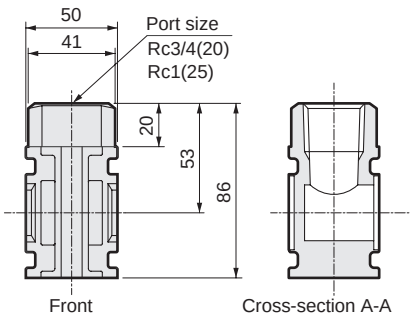

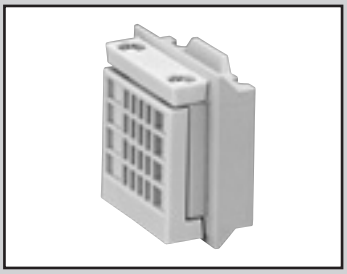

Masking adaptor

CXU10-MA-UN
CXU30-MA-UN Series

Used for fitting section masking.

Customized only

CXU10-MA Interface 10.5 mm

CXU30-MA Interface 21.5 mm

RoHS CAD

How to order

CXU10-MA-UN-00
CXU30-MA-UN-00

* Dedicated model No. for customized combinations.
Components cannot be purchased individually.

Internal structure and parts list/dimensions

● CXU10-MA-UN-00

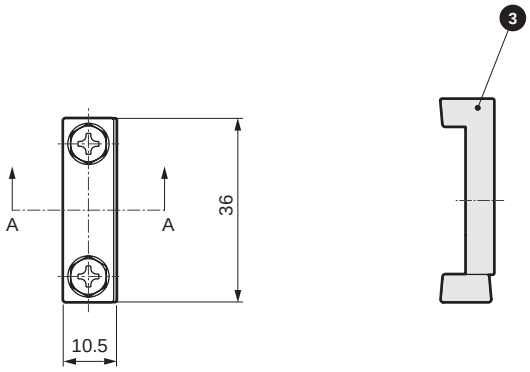

Front　　Cross-section A-A

● CXU30-MA-UN-00

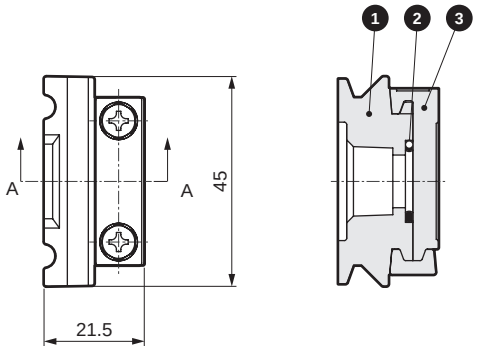

Front　　Cross-section A-A

No.	Part name	Model No.
1	Module conversion adaptor	CXU13-CA-00
2	O-ring	JASO-2013
3	Masking adaptor	CXU10-MA-00

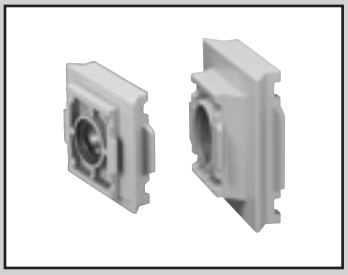

Module conversion adaptor

CXU13-CA-UN/CXU48-CA-UN Series

Capable of connecting 1000 Series with 2000, 3000, 4000 Series and 2000, 3000, 4000 Series with 6000, 8000 Series.

RoHS CAD Interface 16 mm Customized only No thread open

How to order

CXU13-CA-UN-00
CXU48-CA-UN-00

* Dedicated model No. for customized combinations.
Components cannot be purchased individually.
Refer to page 1046 for the model No. of your order.

Dimensions

● CXU13-CA-UN-00

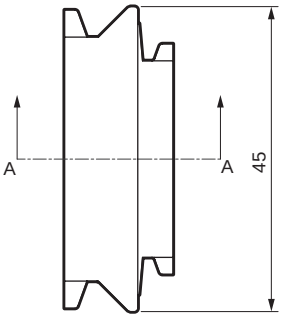

Top

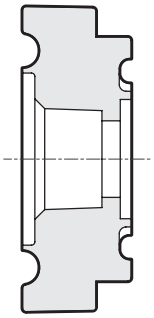

Cross-section A-A

● CXU48-CA-UN-00

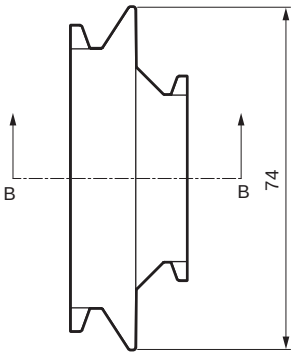

Top

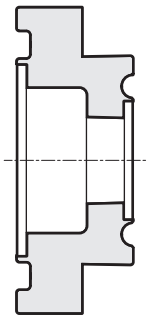

Cross section B-B

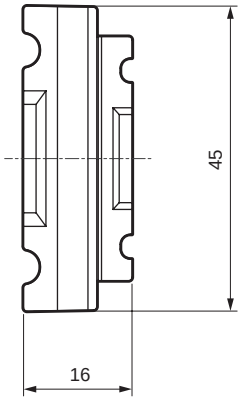

Front

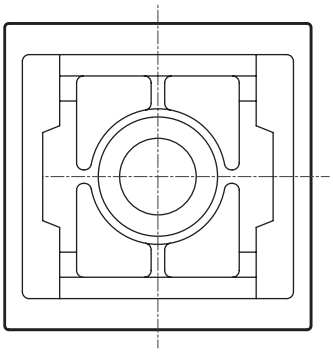

Side

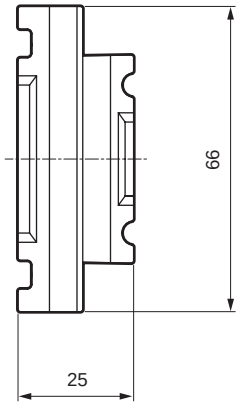

Front

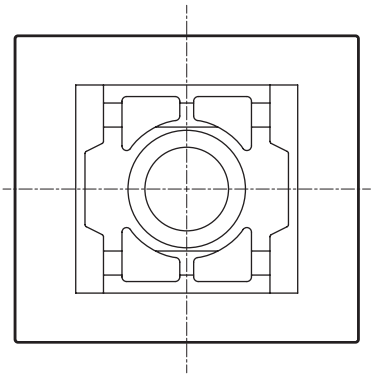

Side

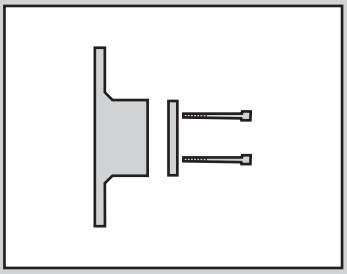

Bracket/joiner

B-UN-W/J-UN-W Series

RoHS CAD Customized only

Dimensions and applications

* Dedicated model No. for customized combinations. Components cannot be purchased individually. Refer to page 1047 for the model No. of your order.

T-bracket set

● Model No.: B110-UN-W / B310-UN-W / B410-UN-W / B810-UN-W

● Applications



*1: B310-UN-W and B410-UN-W cannot be combined.
*2: By using B110-UN-W, the 1000 Series can be adjusted to the same height as the 3000 Series.

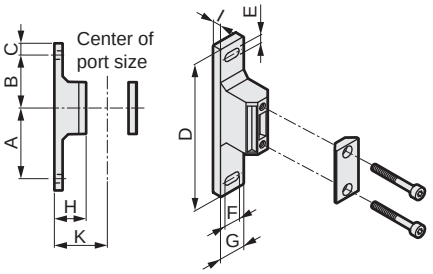

Model No.	Compatible series	A	B	C	D	E	F	G	H	I	K
B110-UN-W	1000 Series	45	35	10	100	5.5	7.5	16	25	7.5	40
B110-UN-H-W	1000 Series	45	35	10	100	5.5	7.5	16	30	7.5	45
B310-UN-W	2000 Series	60	45	10	125	7	14	22	27	7	45
	3000 Series										
B410-UN-W	4000 Series	60	45	10	125	7	14	22	37	7	55
B810-UN-W	6000 Series	70	50	15	150	9	14	27	37	8	65
	8000 Series										

Joiner set

● Model No.: C1000-J100-UN-W
C4000-J400-UN-W
C8000-J800-UN-W

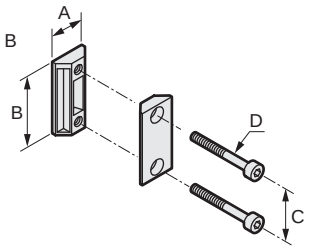

● Applications



Model No.	Compatible series	A	B	C	D
C1000-J100-UN-W	1000 Series	10	36	26	M3.5
C4000-J400-UN-W	2000 Series 3000 Series 4000 Series	21	44	32	M5
C8000-J800-UN-W	6000 Series 8000 Series	26	65	50	M6

MEMO

Air Unit Customized Products

Overview

CKD customizes all air unit combinations.
Allows vertical module connections, which are not available with customized units.

Features

(1) Unrestricted in vertical/horizontal directions

Vertical and horizontal piping can be changed flexibly. Solenoid valves can also be connected to the desired position.

(2) Unlimited flexibility

Module components not listed in this catalog are also available.

(3) Reduced work-hours

All components are connected as modules, eliminating work such as piping.

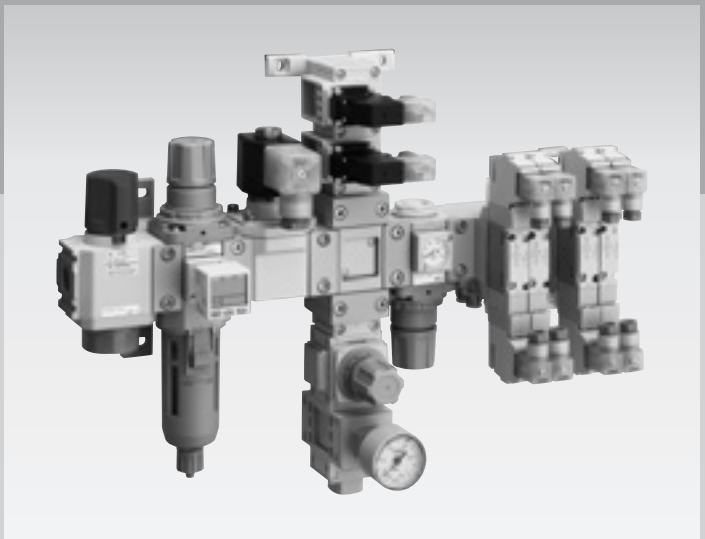

CONTENTS

● Air unit customized products 1006
CXUZ Series

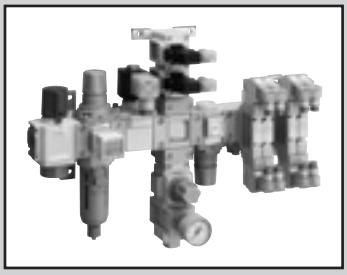

Air unit customized products

CXUZ Series

How to order

CXUZ-FL ○

Dedicated model No.
Each product is assigned a 6-digit number.

Air unit components can be combined depending on applications and space.
Contact CKD for combinations.

Related products (compatible module combination products)

CXU10 (Compatible model: 1000 Series)		
Model	**Precision regulator**	**Electro-pneumatic regulator**
Model No.	RPE1000 	EVD-1000 
Catalog No.	CB-024SA	CB-024SA

CXU30 (Compatible model: 2000, 3000, 4000 Series)			
Model	**Residual pressure exhaust valve with spool position detection**	**Precision regulator**	**Electro-pneumatic regulator**
Model No.	SNS 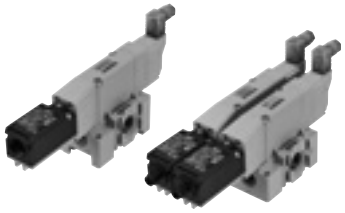	RP2000 	EVD-3000 
Catalog No.	CC-1395A	CB-024SA	CB-024SA

Valve air unit

Overview

In valve air units, the solenoid valve is connected to components such as regulators.
Work such as piping is eliminated, enabling the unit to be used immediately.

Features

(1) Simplified order placement
Units can be purchased using only one form, making order placement and delivery management easy.

(2) Reduced man-hours
FR components and solenoid valves are connected as a module, eliminating work such as piping.

(3) Space saving
Piping free and fitting free simple design. Compact design that fits into confined spaces.

Descriptions of icons

(1) Model selection is easy.

Simple Manifold
Complex options are eliminated to allow easier selection even for the first order.

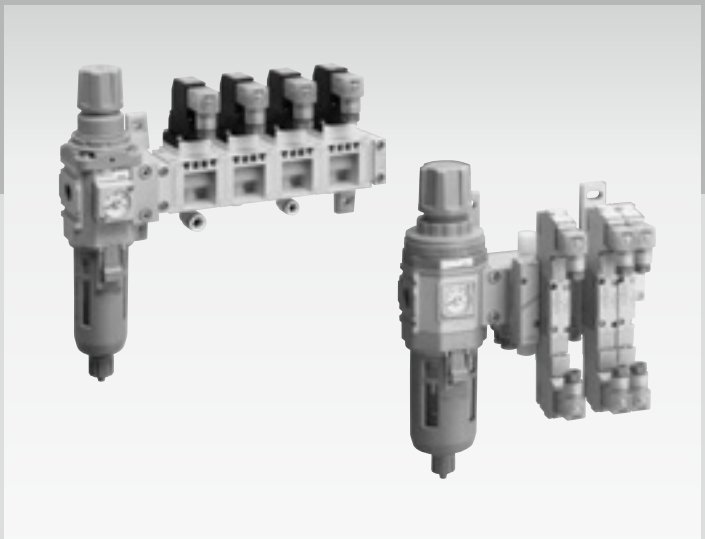

CONTENTS

● Pilot operated 2-port solenoid valve CXU10-GEXA Series 1008
● Pilot operated 5-port valve CXU30-M4G2R Series 1012

Series Variation [Solenoid valves]

Series Model No.	Voltage		Connection port					FR component			Electrical connections		
	24 VDC	100 VAC	Port size (IN)	Port size (OUT)				Regu.	Filter/ regulator		Grommet lead	E type connector	DIN terminal box
			3/8	ø4	ø6	ø8	1/4	R2000	W2000	W3000			
● Pilot operated 2-port solenoid valve CXU10-GEXA Simple manifold 	●	●	●		●	●		●	●		●		●
● Pilot operated 5-port valve CXU30-M4G2R Simple manifold 	●	●	●	●	●	●		●		●		●	●

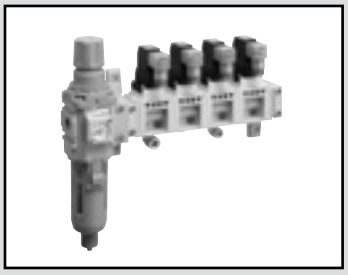

Pilot operated 2-port solenoid valve for compressed air

CXU10-GEXA Series

NC (open when energized)
Order as a manifold with a connected regulator

CAD Simple Manifold

JIS symbol

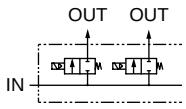

(Example) CXU10-GEXA-C6-R-3-2C-3

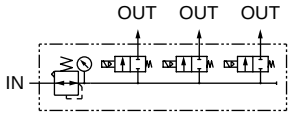

Specifications

Item	CXU10-GEXA				
Working fluid	Compressed air				
Working pressure differential MPa	0.01 (≈1.5 psi, 0.1 bar) to 0.7 (≈100 psi, 7 bar)				*3
Max. working pressure MPa	0.7 (≈100 psi, 7 bar)				
Proof pressure MPa	1.05 (≈150 psi, 10.5 bar)				
Fluid temperature °C	5 (41°F) to 55 (131°F)				
Ambient temperature °C	5 (41°F) to 55 (131°F)				
Atmosphere	Place free of corrosive gas/explosive gas and not exposed to water				
Valve structure	Pilot operated diaphragm drive				
Valve section leakage cm^3/min(ANR)	10 or less				
Mounting orientation	Unrestricted				
Port size (IN)	IN:Rc3/8				
Connecting wire bore size (OUT)	Push-in fitting ø6	Radial push-in fitting ø6	Push-in fitting ø8	Radial push-in fitting ø8	
C[dm^3/(s·bar)] *2	1.6		3.0		
b	0.37		0.32		
Electrical specifications					
Rated voltage	100 VAC, 24 VDC				*1
Rated power VA	1.2				
Power consumption W DC	0.6				
Thermal class	B				
Degree of protection (IEC Standard 529)	Lead wire: IPX0, with DIN terminal box: IPX5				

*1: The voltage fluctuation range is ±10%.
*2: Effective cross-sectional area S and sonic conductance C are converted as S ≈ 5.0 × C.
*3: When using with an extremely small flow rate or when the solenoid valve's secondary side is restricted, set the pressure so that the pressure difference does not fall below 0.01 MPa with the valve opened. (Refer to precautions on pages 1051 to 1055.) Contact CKD if the differential pressure before/after the solenoid valve with the valve opened is small.

Regulator specifications		
Set pressure MPa	0.05 (≈7.3 psi, 0.5 bar) to 0.7 (≈100 psi, 7 bar)	*4, *5
Pressure relief	With relief mechanism	
Port size	Rc3/8	
Ambient / fluid temperatures °C	5 (41°F) to 60 (140°F)	
Filter specifications		
Filtration rating µm	5	
Drain capacity cm^3	12.0	
Port size	Rc3/8	

*4: The set pressure range is limited by the working pressure of CXU10-EXA.
*5: In the case of "F1" with auto-drain, the min. working pressure of auto-drain is 0.15 MPa.

Weight

(Unit: kg)

Item		Description
FR components (including T type brackets and joiners)		
A: Pipe adaptor		0.21
R: Regulator		0.58
RT8: Regulator (without pressure gauge)		0.57
W: Filter/regulator		0.7
WT8: Filter/regulator (without pressure gauge)		0.69
2-port solenoid valve		
CXU10-EXA (discrete valve and joiner)	*6	0.11

The weight is calculated as FR component + 2-port solenoid valve × number of stations.

*6: Weight of models with the DIN terminal box is +20 g.

How to order

CXU10-GEXA-C6-R-3-2C-3

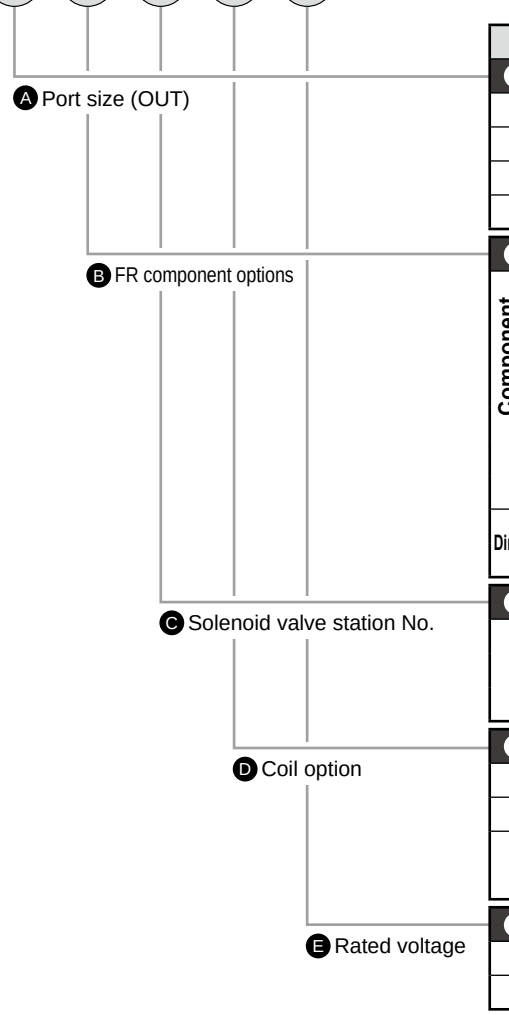

Code		Description
A Port size (OUT)		
C6		ø6 push-in fitting
CL6		ø6 radial push-in fitting
C8		ø8 push-in fitting
CL8		ø8 radial push-in fitting
B FR component options		
Component options *1	**A**	Pipe adaptor (Rc3/8)
	R	Regulator (R2000-10-W-X2 *2)
	RT8	Regulator (R2000-10-W-T8X2 *2) No pressure gauge (port Rc1/4 left open)
	W	Filter regulator (W2000-10-W-F1 *2)
	WT8	Filter regulator (W2000-10-W-F1T8 *2) No pressure gauge (port Rc1/4 left open)
Direction	**Blank**	IN side left
	X	IN side right
C Solenoid valve station No.		
1		1 station
to		to
4		4 stations
D Coil option *3, *4		
2C	Standard	Lead wire (without surge suppressor)
2H	Option	DIN terminal box (Pg7), with lamp (inside terminal box)
2HS		DIN terminal box (Pg7), with lamp/ surge suppressor (inside terminal box)
E Rated voltage		
1		100 VAC
3		24 VDC

⚠ Precautions for model No. selection

*1: The standard filter regulator is the NC auto-drain. Specify “A” unless the component options R, RT8, W, WT8 are selected. Multiple FR component options cannot be selected.
*2: The model No. for the IN side left (FR component direction option “Blank”).
*3: Refer to the table to the right for the available coil option and voltage combinations.
*4: Contact CKD for models with M12 connector cables.

Coil option	Voltage	
	1	3
2C	●	●
2H	●	
2HS		●

Select from the combinations indicated with ● above.

Internal structure

Model	Corresponding catalog and page No.
CXU10-EXA	Page 1027
CXU10-TA	Page 1044
CXU10-MA	Page 1045
R2000	Page 136
W2000	Page 90

Dimensions

● Grommet lead wire

CXU10-GEXA-*-A-*-2C-*

Cartridge fitting: Straight

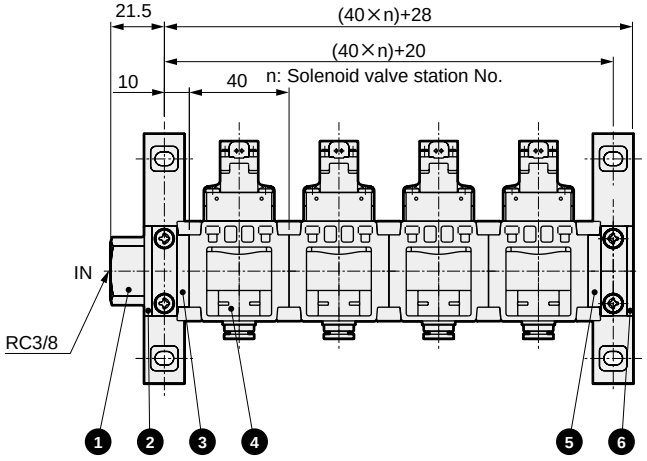

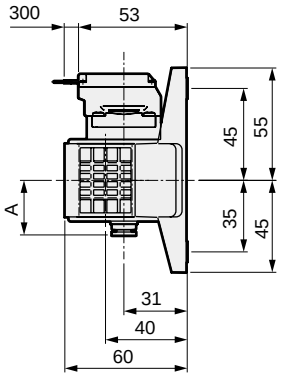

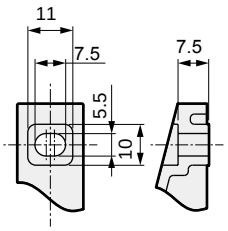

Enlarged view of bracket section

Configured product table

No.	Product name	Model No.
1	Pipe adaptor *1	(FR component option -A)
2	T type bracket	B110-W
3	Turn adaptor	CXU10-TA-00
4	Pilot operated 2-port solenoid valve	CXU10-EXA-□
5	Turn adaptor	CXU10-TA-00
6	Masking adaptor	CXU10-MA-00-B

*1: Configured products may differ depending on FR component options.
*2: Mounting directions of brackets and solenoid valves differ from those of the customized units.

Optional dimensions table

Option	A	B	C	D	E
C6	27	Push-in fitting ø6	-	-	-
CL6	-	Push-in fitting ø6	31	37	18.5
C8	27	Push-in fitting ø8	-	-	-
CL8	-	Push-in fitting ø8	32	39	21

Cartridge fitting: Elbow

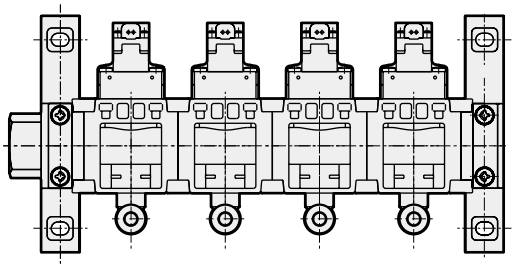

n: Solenoid valve station No.

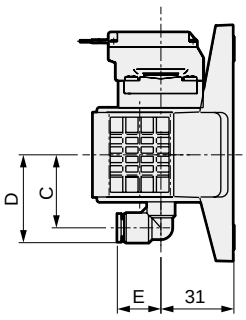

● With DIN terminal box (Pg7)

CXU10-GEXA-*-A-*-2HS-*

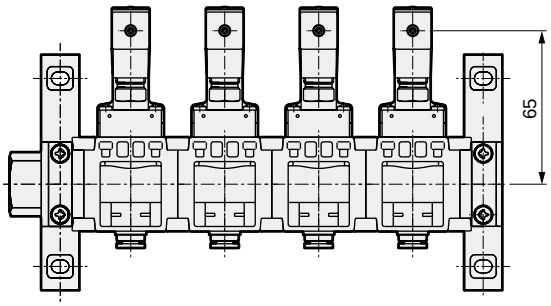

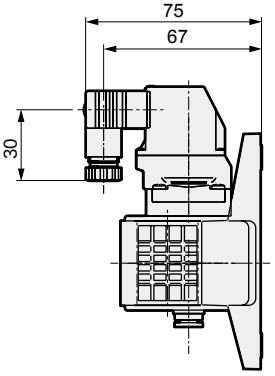

Dimensions

● FR component option: Regulator

CXU10-GEXA-*-$^{R}_{RT8}$-*-*-*

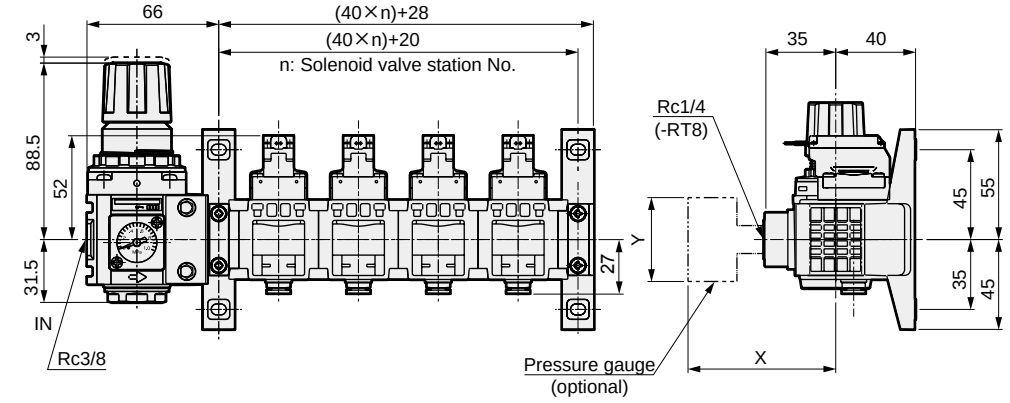

Pressure gauge dimensions table

Pressure gauge (optional)	X	Y
G45D	(73.5)	ø39
G49D	(73)	ø43.5
G59D	(75.5)	ø52
G40D	(75)	ø42.5
G50D	(75)	ø52.5
G41D	(73.5)	ø42
G52D	(85.5)	ø52.5

● FR component option: Filter regulator

CXU10-GEXA-*-$^{W}_{WT8}$-*-*-*

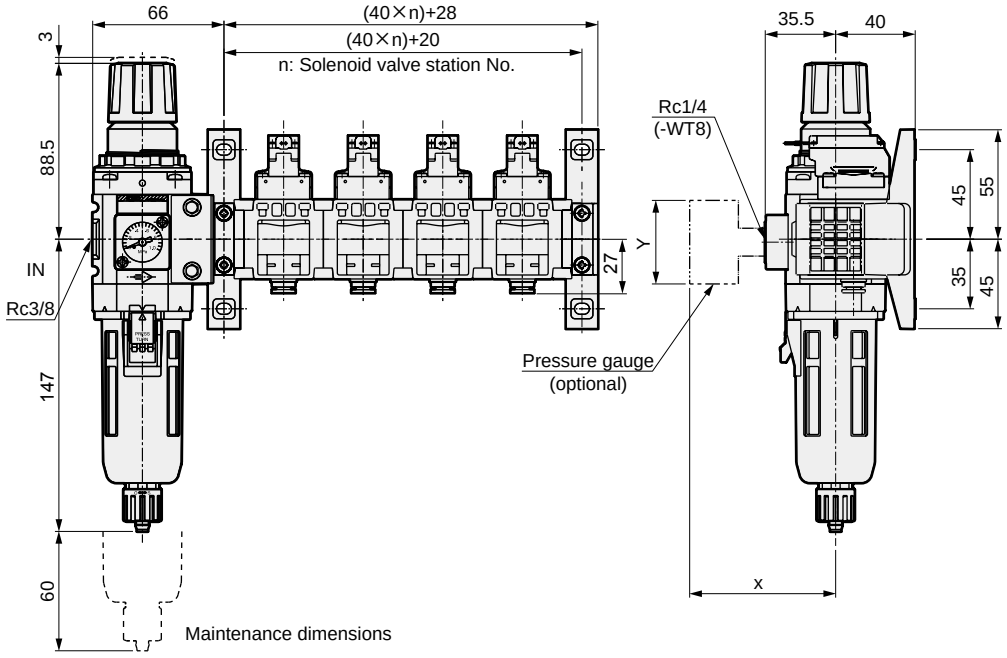

Pressure gauge dimensions table

Pressure gauge (optional)	X	Y
G45D	(73.5)	ø39
G49D	(73)	ø43.5
G40D	(75)	ø42.5
G41D	(73.5)	ø42
G52D	(85.5)	ø52.5

● FR component option: Reverse flow

CXU10-GEXA-*-$^{R}_{RT8}$ X-*-*-*

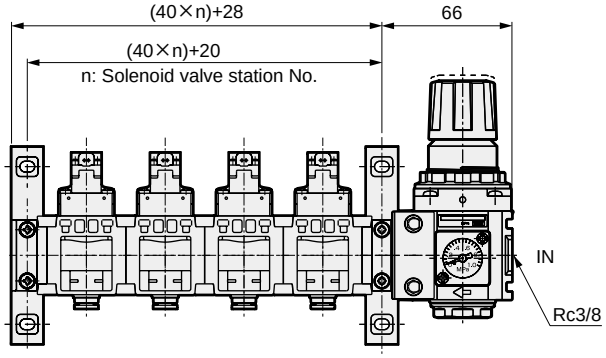

Note: When the reverse flow option X is selected, the IN side and FR component are on the right.
The figure on the left is for the regulator.

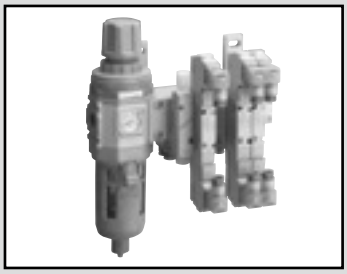

Pilot operated 5-port valve

CXU30-M4G2R Series

Order as a manifold with a connected regulator

CAD Simple Manifold

Common specifications

Item		Description
Valve and operation		Pilot operated soft spool valve
Working fluid		Compressed air
Max. working pressure MPa		0.7 (≈100 psi, 7 bar)
Min. working pressure MPa		0.2 (≈29 psi, 2 bar) (2-position, 3-position)
Proof pressure MPa		1.05 (≈150 psi, 10.5 bar)
Fluid temperature °C		5 (41°F) to 55 (131°F)
Ambient temperature °C		5 (41°F) to 55 (131°F)
Atmosphere		Place free of corrosive gas and explosive gas Not exposed to water
Port size	Port A/B	Push-in fitting ø4, ø6, ø8
	R1/R2 port	Rc1/4
Manual operating device		Non-locking/locking common
Pilot exhaust method		Main valve/pilot valve common exhaust
Lubrication *1		Not required
Degree of protection *2		Dust-proof
Vibration/shock resistance m/s^2		50 or less/300 or less

*1: Use turbine oil Class 1 ISO VG32 for lubrication.
Excessive or intermittent lubrication results in unstable operation.
*2: Avoid water drops or oil, etc., during use.
IP65 (jet-proof) applies for DIN terminal box specifications.
However, the specified outer diameter of the applicable cord and tightening torque must be used for fixing in place.

Electrical specifications

Item		Description
Rated voltage	DC	24
V	AC	100
Rated voltage fluctuation range		±10%
Holding current	24 VDC	0.017
A	100 VAC	0.009
Power consumption W	24 VDC	0.4
Apparent power VA	100 VAC	0.98
Thermal class		B
Surge suppressor		Standard
Indicator		With indicator lamp (standard)

JIS symbol

2-position single

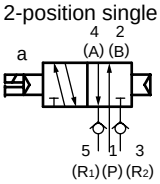

2-position double

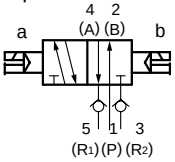

3-position all ports closed

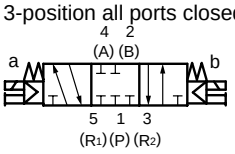

3-position A/R/B connection

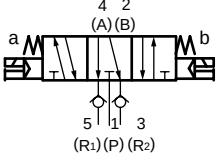

3-position P/A/B connection

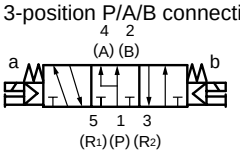

(Example) CXU30-M4G2R-1130-C6-R-B-3

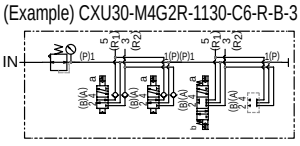

Weight

(Unit: kg)

Item			Description	
FR components (including T type brackets and joiners)				
A: Pipe adaptor			0.54	
R: Regulator			0.80	
RT8: Regulator (without pressure gauge)			0.79	
W: Filter/regulator			1.06	
WT8: Filter/regulator (without pressure gauge)			1.05	
5-port valve: Switching position			Single valve	Valve sub-base
Without solenoid valve: Masking plate			0.02	0.32
2-position	Single	E type connector	0.08	
		DIN terminal	0.10	
	Double	E type connector	0.10	
		DIN terminal	0.14	
3-position	All ports closed	E type connector	0.11	
		DIN terminal	0.15	

The weight is calculated as FR component used + solenoid valve (1) to (4) + valve sub-base.

Flow characteristics

Solenoid position		P→A/B		A/B→R1/R2	
		C[dm^3/(s·bar)]	b	C[dm^3/(s·bar)]	b
2-position		2.3	0.29	1.8	0.24
3-position	All ports closed	2.1	0.27	2.3	0.27
	A/B/R connection	2.1	0.34	1.7	0.2
	P/A/B connection	2.2	0.34	2.4	0.29

*1: Effective cross-sectional area S and sonic conductance C are converted as S ≈ 5.0 × C.
*2: Values for 2-position and A/B/R connection are the values when an exhaust check valve is integrated.

Regulator specifications		
Set pressure	MPa	0.2 to 0.7 *3
Pressure relief		With relief mechanism
Port size		Rc3/8
Filter specifications		
Filtration rating	μm	5
Drain capacity	cm^3	45
Port size		Rc3/8

*3: The set pressure range is limited by the working pressure of CXU30-4G2R.

How to order

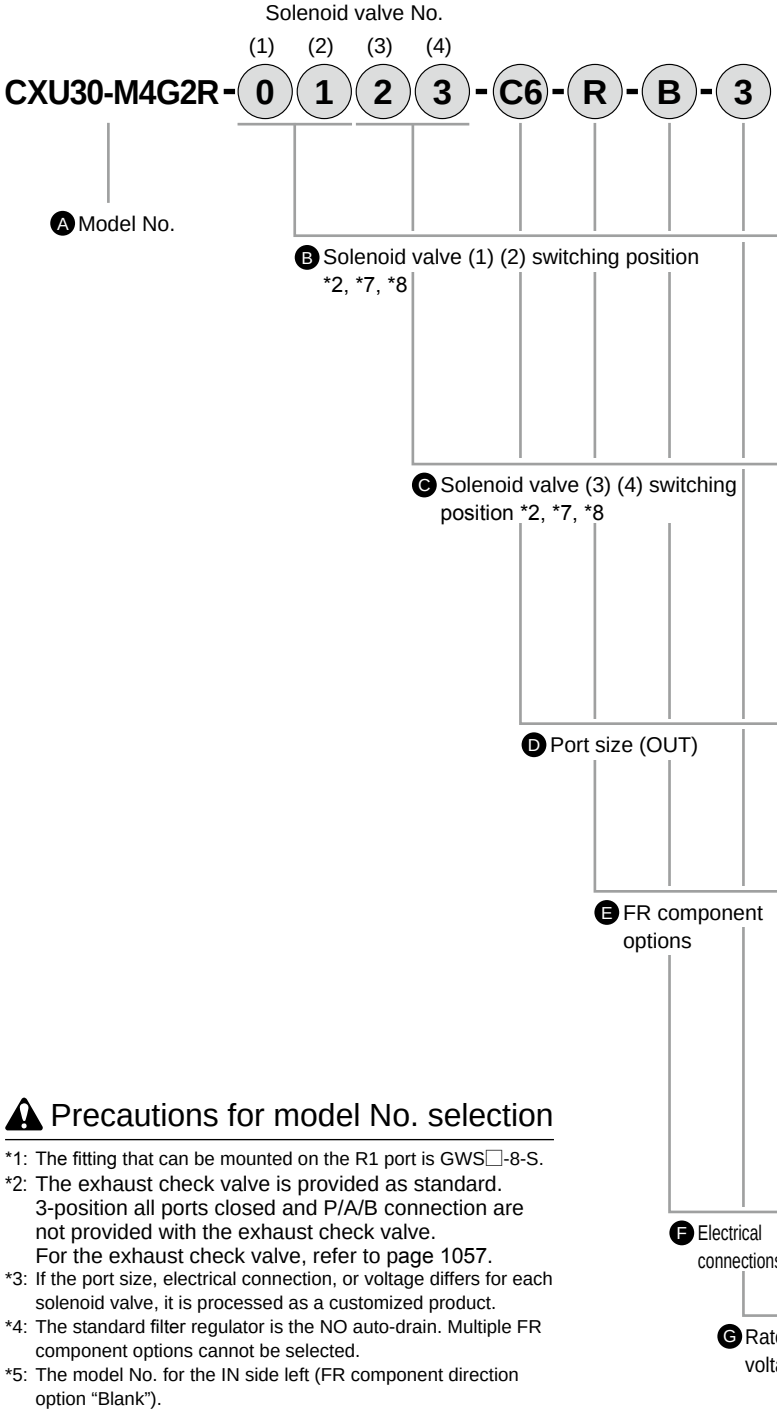

Code	Description
B Solenoid valve (1), solenoid valve (2) switching position	
0	Without solenoid valve: Masking plate
1	2-position single; with exhaust check valve
2	2-position double; with exhaust check valve
3	3-position all ports closed
4	3-position ABR connection; with exhaust check valve
5	3-position PAB connection
C Solenoid valve (3), solenoid valve (4) switching position	
Blank	Without sub-base
0	Without solenoid valve; Masking plate
1	2-position single; with exhaust check valve
2	2-position double; with exhaust check valve
3	3-position all ports closed
4	3-position A/B/R connection; with exhaust check valve
5	3-position P/A/B connection
D Port size (OUT)	
C4	ø4 push-in fitting
C6	ø6 push-in fitting
CL6	ø6 radial push-in fitting (facing rear)
C8	ø8 push-in fitting
E FR component options	
Component options **A**	Pipe adaptor (Rc3/8)
Component options **R**	Regulator (R2000-10-W-X2 *5)
Component options **RT8**	Regulator (R2000-10-W-T8X2 *5) No pressure gauge (port Rc1/4 left open)
Component options **W**	Filter regulator (W3000-10-W-F *5)
Component options *4 **WT8**	Filter regulator (W3000-10-W-FT8 *5) No pressure gauge (port Rc1/4 left open)
Direction **Blank**	IN side left
Direction **X**	IN side right
F Electrical connections	
B	DIN terminal box (Pg7) with surge suppressor and indicator lamp
E20	E type connector Lead wire (500 mm) with surge suppressor/lamp
G Rated voltage	
1	100 VAC (rectifier integrated)
3	24 VDC

⚠ Precautions for model No. selection

*1: The fitting that can be mounted on the R1 port is GWS□-8-S.
*2: The exhaust check valve is provided as standard. 3-position all ports closed and P/A/B connection are not provided with the exhaust check valve. For the exhaust check valve, refer to page 1057.
*3: If the port size, electrical connection, or voltage differs for each solenoid valve, it is processed as a customized product.
*4: The standard filter regulator is the NO auto-drain. Multiple FR component options cannot be selected.
*5: The model No. for the IN side left (FR component direction option "Blank").
*6: Two silencers (SLW-8S) are attached to one sub-base.
*7: Refer to dimensions for positions of solenoid valves (1) and (4).
*8: When masking plates are used for all solenoid valves, electrical connections and rated voltage options are blank.

Internal structure

Model	Corresponding catalog and page No.
CXU30-4G2R	Page 1036
CXU10-MA	Page 1001
CXU13-CA	Page 1046
R2000	Page 136
W3000	Page 90

Dimensions

CXU30-M4G2R -A

● E type connector
Cartridge fitting: Straight

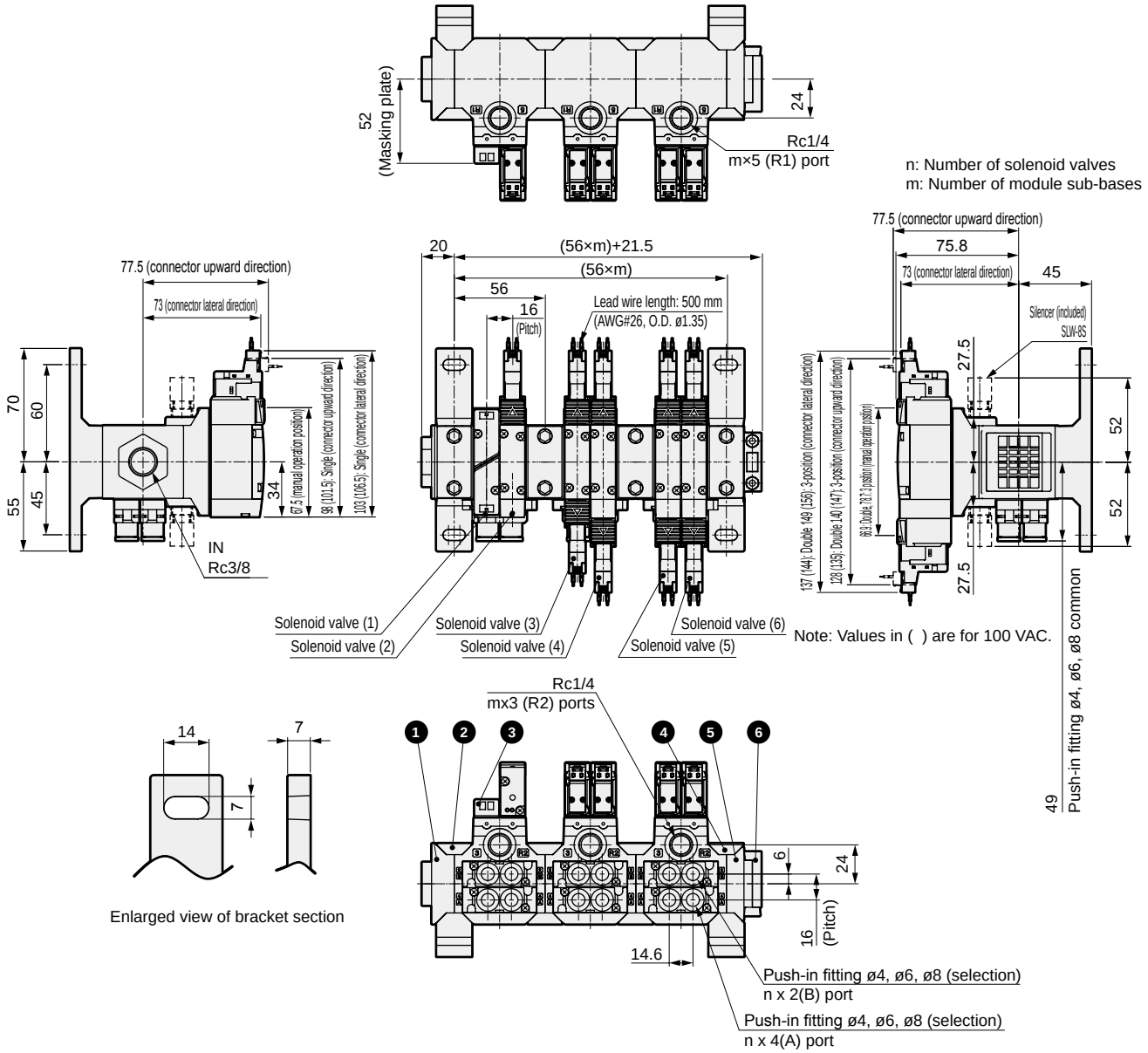

Configured product table

No.	Product name	Model No.
1	Pipe adaptor *1	(FR component option -A)
2	T type bracket	B310-W
3	Pilot operated 5-port valve	CXU30-4G2R-□
4	T type bracket	B310-W
5	Module conversion adaptor	CXU13-CA-00
6	Masking adaptor	CXU10-MA-00

*1: Configured products may differ depending on FR component options.

Solenoid valve and module sub-base quantity

Model No.	No. of solenoid valves	Module sub-base quantity
CXU30-M4G2R-(1)(2)	2	1
CXU30-M4G2R-(1)(2)(3)(4)	4	2

Note: The masking plate quantity is included in the solenoid valve quantity.
There are two solenoid valves for each module sub-base.

Dimensions

● DIN terminal box (B)
Cartridge fitting: Straight
2-position single

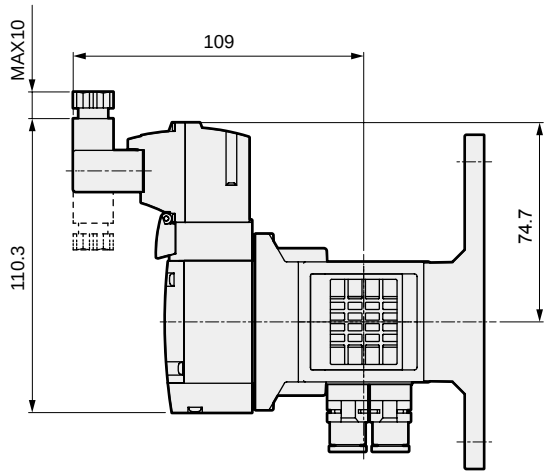

3-position, double

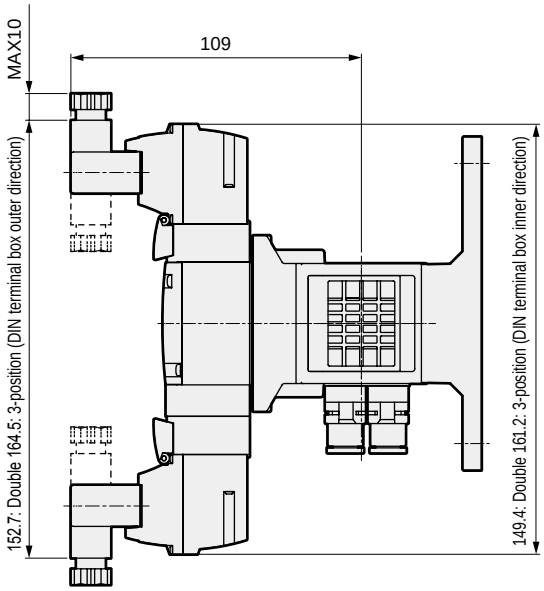

Note: DIN terminal box assembly is shipped facing inward.

● ø6 radial push-in fitting (facing rear)

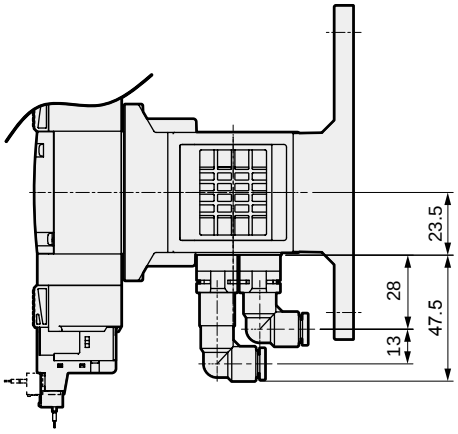

● FR component option: Regulator
CXU30-M4G2R-**-*-R_{RT8}-*-*

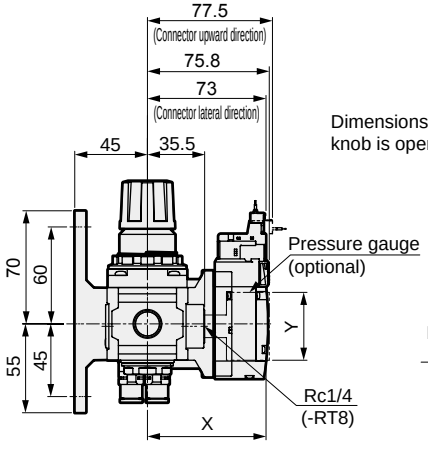

Dimensions when the knob is operated

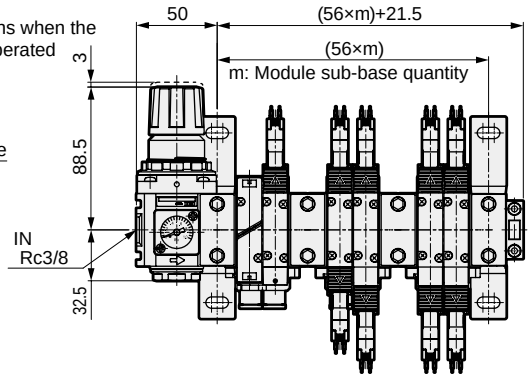

Pressure gauge dimensions table

Pressure gauge (optional)	X	Y
G49D	(73)	ø43.5
G59D	(75.5)	ø52
G40D	(75)	ø42.5
G50D	(75)	ø52.5
G41D	(73.5)	ø42
G52D	(78.5)	ø52.5

For the pressure gauge model No., refer to catalog No.CB-024SA.

Dimensions

● FR component option: Filter regulator

CXU30-M4G2-**-*- $^{W}_{WT8}$ -*-*

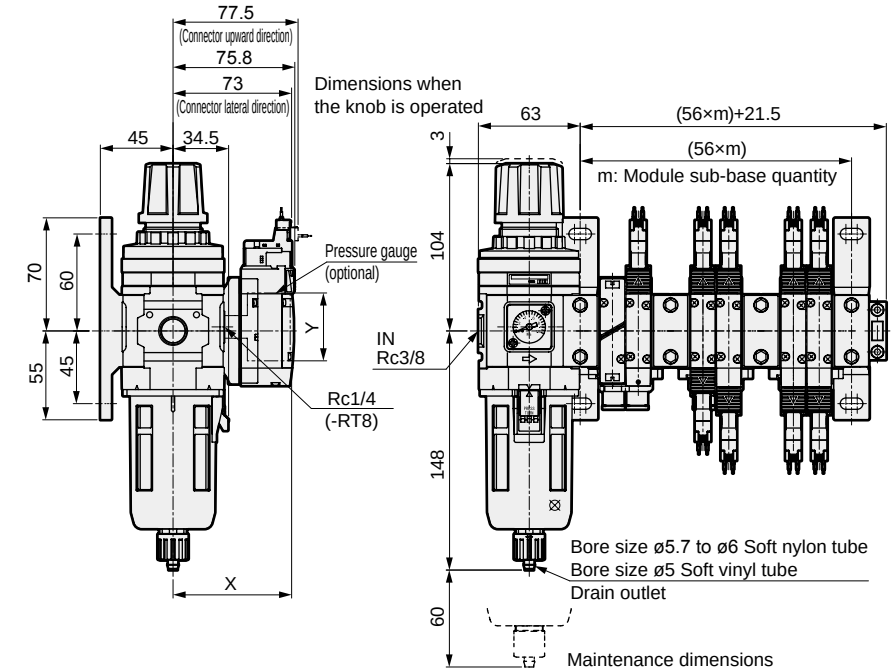

Pressure gauge dimensions table

Pressure gauge (optional)	X	Y
G49D	(69.5)	ø43.5
G59D	(72)	ø52
G40D	(71.5)	ø42.5
G50D	(71.5)	ø52.5
G41D	(70)	ø42
G52D	(75)	ø52.5

● FR component option: Reverse flow

CXU30-M4G2-**-*- $^{R}_{RT8}$ X-*-*

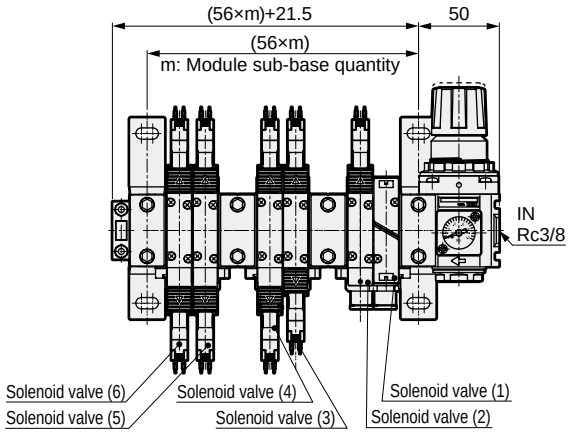

Note: When the reverse flow option X is selected, the IN side and FR component are on the right.
Solenoid valves are arranged in order from the left.
The figure on the left is for the regulator.

Single air unit

Overview

Air unit components can be easily added on to existing units and can be conveniently purchased during maintenance.
Also, general components can be purchased together and assembled with air unit components.

Features

(1) Module connection of solenoid valves
2-port and 5-port valves can be connected to conventional FRL components.

(2) Easy connection using a joiner
Conventional piping materials and tubes are not used, so there is no possibility of foreign objects entering or pressure loss.

(3) Various module components
Modules can be split into four directions, twisted 90 degrees, or resized.

Descriptions of icons

IN Gasket

(1) Gasket connection on the IN side
A gasket is required for connecting module concavities.

No thread open

(2) Cannot be used at terminals
Since no port thread is provided, a masking adaptor or pipe adaptor is required for use at terminals.

Expandable

(3) Easy to expand stations
IN structures are used on both sides of the module connection section, making it easy to expand stations.

Inline

(4) Main inline
The component can be used as main inline. This structure is incompatible with the expandable type.

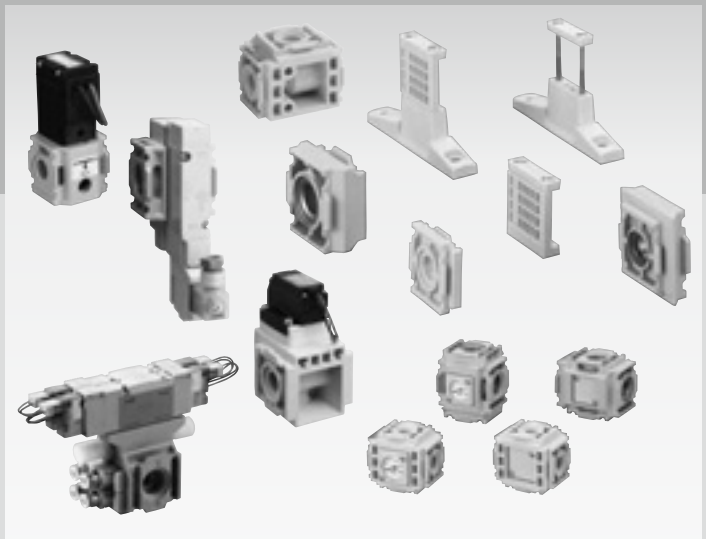

CONTENTS

- Shut-off 3-port solenoid valve 1020
  CXU30-VE Series
- Pilot operated 2-port solenoid valve 1026
  CXU10-EXA Series
- Direct acting 2-port solenoid valve 1028
  CXU10-FAB3 Series
- Direct acting 2-port solenoid valve 1030
  CXU30-FAB4U Series
- Pilot kick 2-port solenoid valve 1032
  CXU30-ADK Series
- Pilot operated 5-port valve 1034
  CXU30-4G2R Series
- Module check valve 1040
  CXU10-CHV Series
- 4-way distributor 1042
  CXU10-D4 Series
  CXU30-D4 Series
- Turn adaptor 1044
  CXU10-TA Series
  CXU30-TA Series
- Masking adaptor 1045
  CXU10-MA Series
- Module conversion adaptor 1046
  CXU13-CA Series
  CXU48-CA Series
- Brackets, joiners, O-rings/gaskets, pipe plugs 1047
  B-W J-W ORING GASKET CXU-PP

[Solenoid valve]

Series	Major applications	JIS symbol	Model No.	
● Shut-off 3-port solenoid valve Module dedicated Inline 	For modular component Master valve	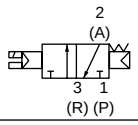	CXU30-VE	
● Pilot operated 2-port solenoid valve IN gasket Expandable No thread open 	For air blow	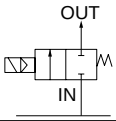	CXU10-EXA	
● Direct acting 2-port solenoid valve IN gasket Expandable No thread open 	For air blow	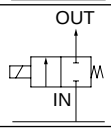	CXU10-FAB3	
● Direct acting 2-port solenoid valve IN gasket Expandable No thread open 	For air blow	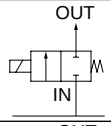	CXU30-FAB4U	
● Pilot kick 2-port solenoid valve No thread open Inline 	Main ON/OFF	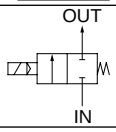	CXU30-ADK	
● Pilot operated 5-port valve IN gasket Expandable No thread open 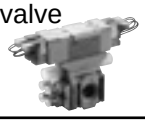	For driving cylinder	(Example) CXU30-4G2R-13-C6-B-1 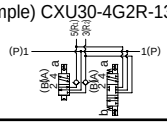	CXU30-4G2R	

[Distributor, adaptor]

Series	Major applications	Applications	Model No.	
● Module check valve IN gasket No thread open 	Reverse flow prevention		CXU10-CHV	
● 4-way distributor IN gasket No thread open *2 	4-way branch		CXU10-D4	
			CXU30-D4	
● Turn adaptor IN gasket No thread open 	Turning the module 90°		CXU10-TA	
			CXU30-TA	
● Masking adaptor 	Masking the module		CXU10-MA	
● Module conversion adaptor IN gasket No thread open 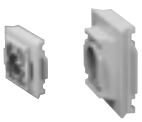	Combination of 1000 Series and 3000 Series		CXU13-CA	
	Connecting 4000 Series and 8000 Series		CXU48-CA	

*1: Effective cross-sectional area S and sonic conductance C are converted as S ≈ 5.0 x C.

Module		Port size (OUT)							Flow characteristics C[dm^3/(s·bar)] *1	Page
1000 Series	2000 3000 Series 4000	ø4	ø6	ø8	1/8	1/4	3/8	1/2		
	●								7	1020
●			●	●					1.4 to 3.2	1026
●			●	●					1.2	1028
	●					●			2.1	1030
	●								11	1032
	●	●	●	●					2.2 to 2.7	1034

*2: There is a port size for CXU30-D4.

Module			Port sz	Description Page
1000 Series	2000 3000 Series 4000	6000 8000 Series	3/8	
●				1040
●				1042
	●		●	
●				1044
	●			
●				1045
●				1046
	●			

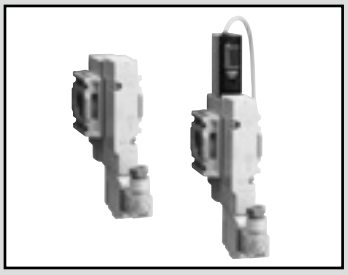

Shut-off 3-port solenoid valve

CXU30-VE Series

Shut-off 3-port solenoid valve
capable of modular connection
with 2000, 3000 and 4000 Series
Suitable for modular component master valves

JIS symbol

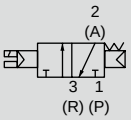

Module dedicated

RoHS

Inline

Common specifications

Item		Description	
Configuration		Without pressure switch	With pressure switch
Valve and operation		Pilot operated soft spool valve	
Working fluid		Compressed air	
Max. working pressure MPa		0.7 (≈100 psi, 7 bar)	
Min. working pressure MPa		0.2 (≈29 psi, 2 bar)	
Proof pressure MPa		1.05 (≈150 psi, 10.5 bar)	
Fluid temperature °C		5 (41°F) to 55 (131°F)	
Ambient temperature °C		-5 (23°F) to 55 (131°F) (no freezing)	5 (41°F) to 55 (131°F) (no freezing)
Atmosphere		Place free of corrosive gas/explosive gas and not exposed to water	
Port size	P-port	Rc1/2 (capable of connection with 2000, 3000 and 4000 Series)	
	A-port	For module only (2000, 3000 and 4000 Series)	
	R-port	Rc1/4	
Manual operating device		Non-locking/locking common	
Pilot exhaust method		Main valve/pilot valve individual exhaust	
Lubrication *1		Not required	
Degree of protection *2		Dust-proof	
Vibration/impact m/s^2		50 or less/294 or less	
Effective cross-sectional area	P→A mm^2	35	
	A→R mm^2	20	
Weight (excluding joiner) kg *3		0.38	0.45

*1: Use turbine oil Class 1 ISO VG32 for lubrication. Excessive or intermittent lubrication results in unstable operation.
*2: Avoid water drops or oil, etc., during use.
IP65 (jet-proof) applies for DIN terminal box specifications. However, the specified outer diameter of the applicable cord and tightening torque must be used for fixing in place.
*3: Weight with the DIN terminal box is +0.02kg.

Solenoid valve specifications

Item		Description
Rated voltage V	DC	24
	AC	100
Rated voltage fluctuation range		±10%
Holding current A	24 VDC	0.017
	100 VAC	0.009
Power consumption W	24 VDC	0.4
Apparent power VA	100 VAC	0.98
Thermal class		B
Surge suppressor		Standard
Indicator		With indicator lamp (standard)
Wiring		E20 : oil resistant vinyl cabtyre cable B : DIN terminal box (VCTF 2(3) core (ø3.5 to 7) specified in the applicable dimensions for cable JIS C 3306) B2 : DIN terminal box with M12 connector cable (oil resistant vinyl cabtyre cable)

Pressure switch specifications

Item	Description
Set pressure range MPa	0.1 (≈15 psi, 1 bar) to 0.6 (≈87 psi, 6 bar)
Hysteresis MPa	0.08 (≈12 psi, 0.8 bar) or less
Repeatability MPa	±0.02 (≈2.9 psi, 0.2 bar) or less
Contact array	1a *4
Wiring	E20, B: Lead wire (oil resistant vinyl cabtyre cable 2-conductor 0.2 mm^2) B2: Lead wire (oil resistant vinyl cabtyre cable) + M12 connector
Degree of protection	IP65 equiv. *5

*4: The contact turns ON if air pressure exceeding the scale set pressure is applied.
*5: The fitting that comes with the product should be used for the atmospheric pressure inlet port, and the tube should be extended to a spot where no water will enter.

Pressure switch wiring section specification

Item	Description	
Load voltage	24 VDC	100 VAC
Load current	5 to 50 mA	7 to 20 mA
Internal voltage drop	3V or less	
Lamp	LED (Lit when ON)	
Insulation resistance	20 MΩ and over at 500 VDC megger	
Withstand voltage	No failure after 1 minute of 1,000 VAC application.	

How to order

CXU30-VE-00- P X1 - E20 S - 3

Ⓐ Model No.

Ⓑ Pressure switch option

Code	Description
Ⓑ Pressure switch option	
Blank	Without pressure switch
P	With pressure switch

Ⓒ Flow direction option

Code	Description
Ⓒ Flow direction option	
Blank	Standard flow (left → right)
X1	Reverse flow (right → left)

Ⓓ Electrical connections

Code	Description
Ⓓ Electrical connections	
B	DIN terminal box (Pg7) with surge suppressor and indicator lamp
E20	E type connector, lead wire (500 mm) with surge suppressor and indicator lamp
B2	DIN Term box-M12 300 mm cable, surge suppress, indicator lamp *1

Ⓔ Option

Code	Description
Ⓔ Option	
Blank	None
S	Silencer (SLW-8L) attached

Ⓕ Rating voltage

Code	Description
Ⓕ Rated voltage	***1**
1	100 VAC (rectifier integrated)
3	24 VDC

⚠ Precautions for model No. selection

*1: Only the rated voltage [3] is available for the electrical connection [B2].
*2: The joiner set (joiner, bolt, O-ring) and one gasket are enclosed.
*3: The length of the lead wire for the pressure switch is 1 m.
*4: The product comes with a fitting for the atmospheric pressure inlet port of the pressure switch.

Internal structure and parts list

● E type connector

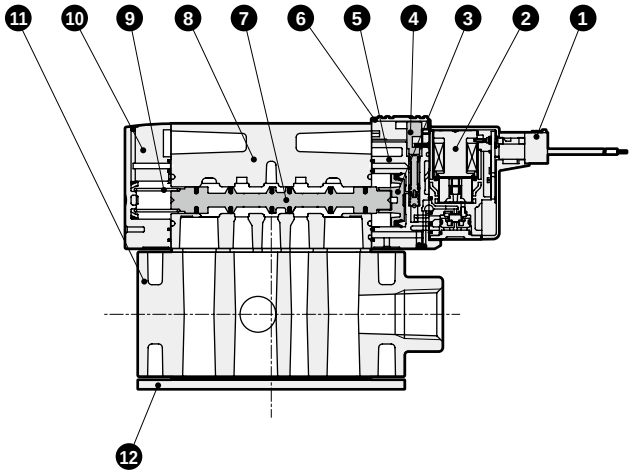

No.	Part name	Material
1	E type connector socket assembly	-
2	Coil assembly	-
3	Piston D assembly	-
4	Manual operating device	Resin
5	Piston chamber	Resin
6	Manual protection cover	Resin
7	Spool assembly	-
8	Body	Aluminum alloy die-casting
9	Spool spring	Stainless steel
10	Cap	Resin
11	Module sub-base	Aluminum alloy die-casting
12	Masking plate	Steel plate
13	DIN terminal box assembly	-
14	Adaptor	Copper alloy
15	Piston	Resin
16	Magnet	-
17	Shield plate	Steel plate
18	Stopper	Resin
19	Plate	Resin
20	Cylinder switch	-
21	Spring	Piano wire
22	Body	Aluminum alloy die-casting
23	Screw	Steel

● DIN terminal box B

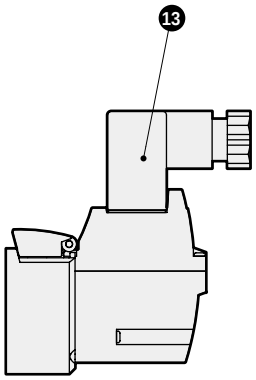

● Pressure switch P

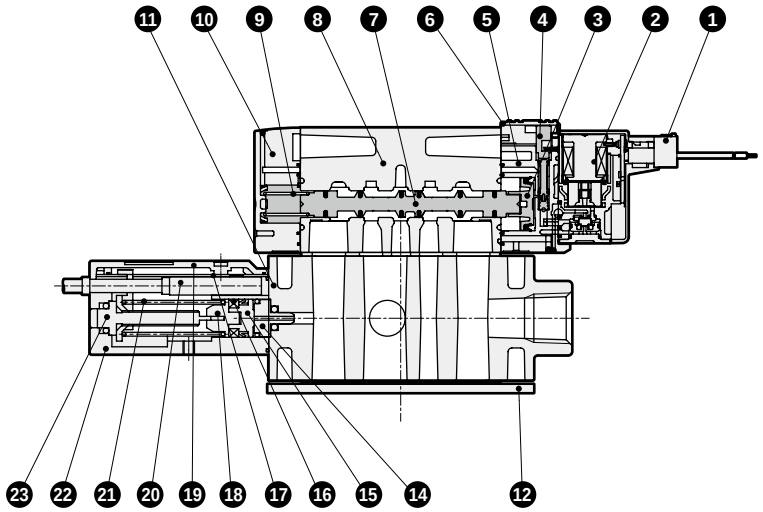

● E type connector

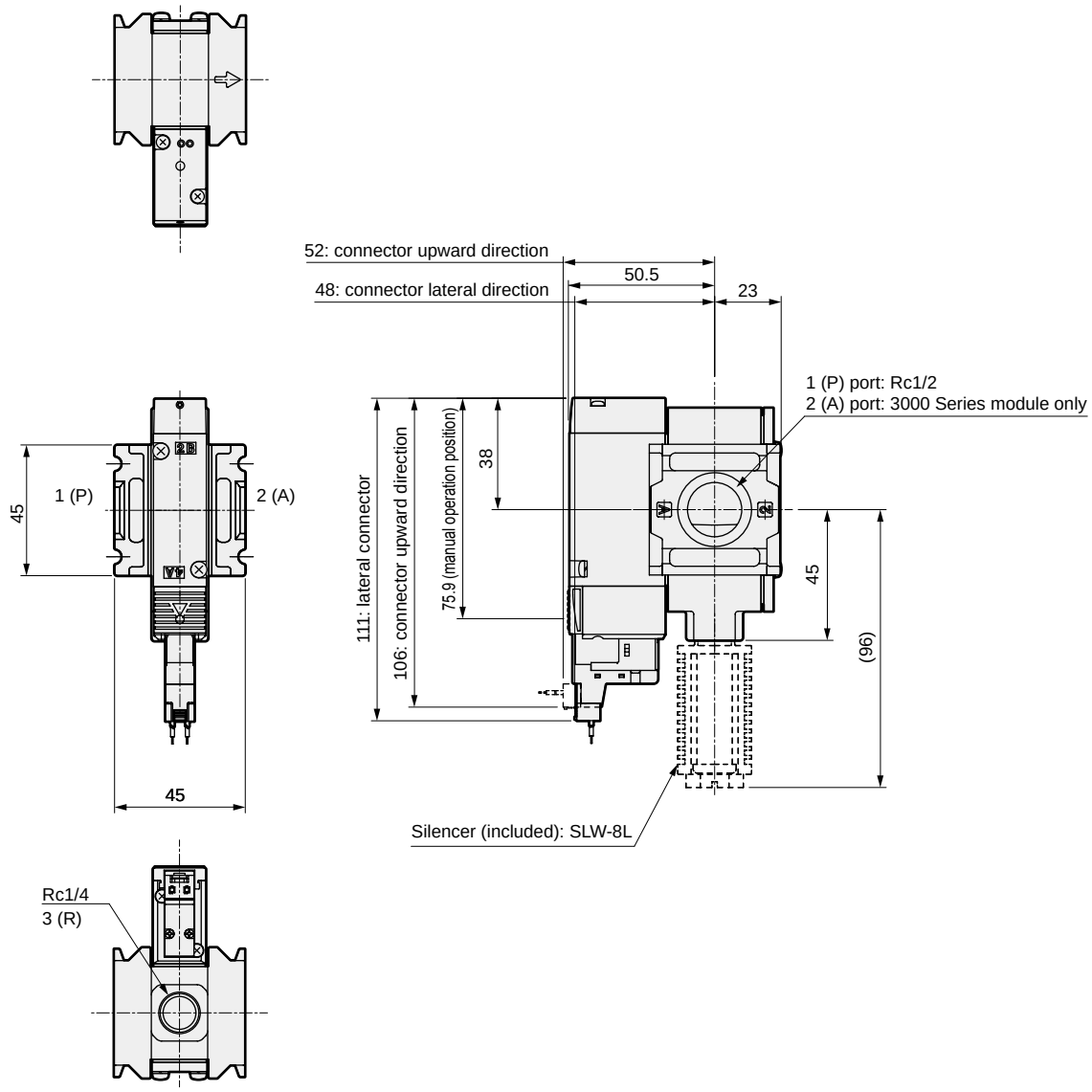

● DIN terminal box B

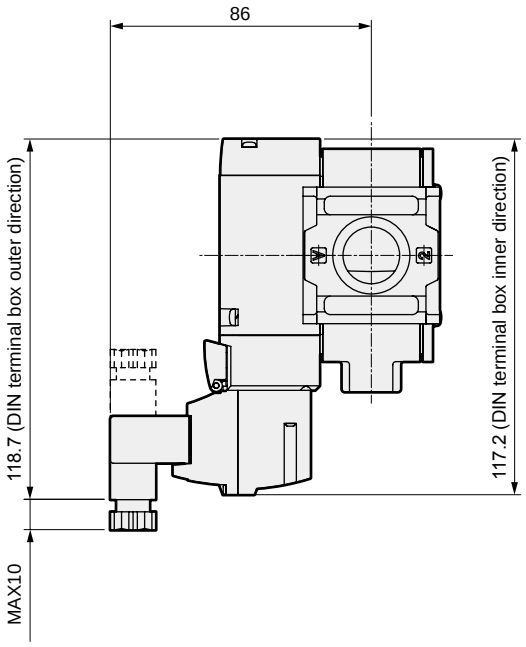

● Flow direction X1

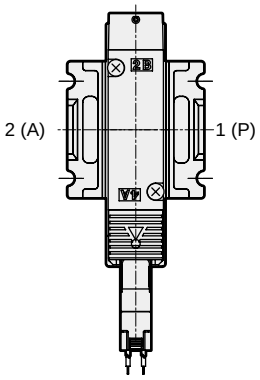

Dimensions

● Pressure switch P

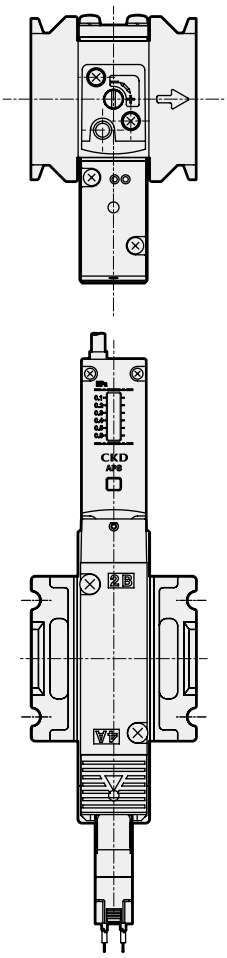

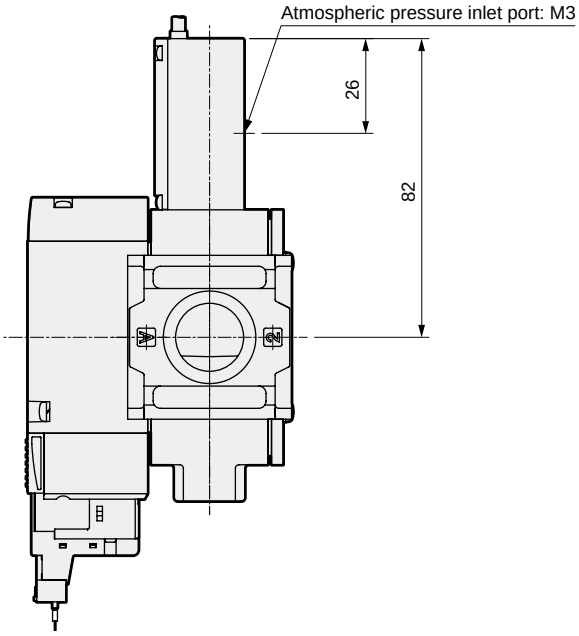

● DIN terminal box with M12 connector cable B2 / Pressure switch P-B2

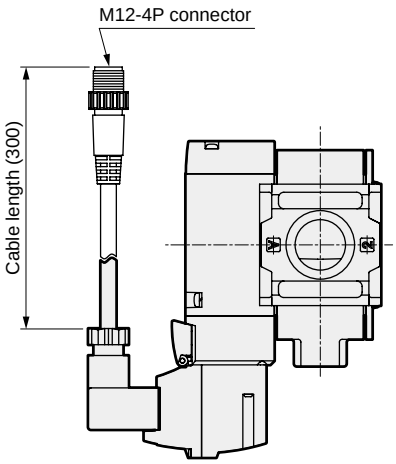

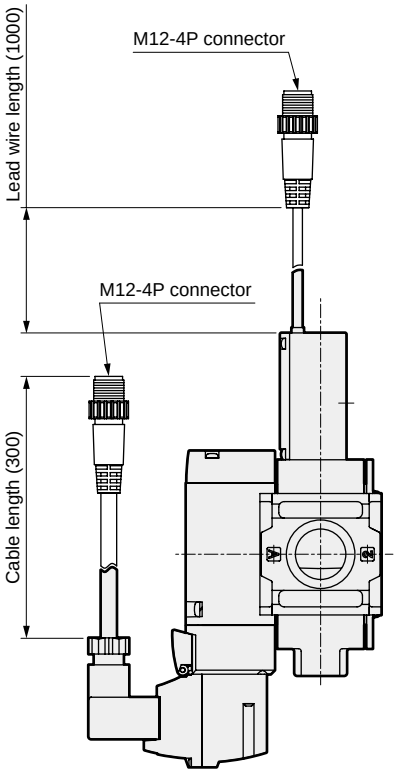

Pin array (common to DIN terminal box and pressure switch)

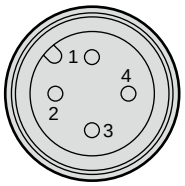

PIN No.	Applications
1PIN	(Not used)
2PIN	(Not used)
3PIN	Power supply -
4PIN	Power supply +

MEMO

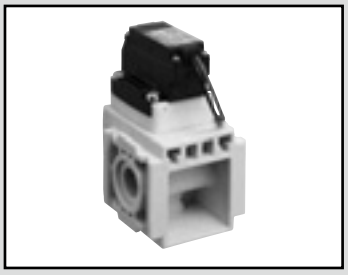

Pilot operated 2-port solenoid valve for compressed air

CXU10-EXA Series

NC (open when energized), diaphragm drive
Modular connection with 1000 Series enabled
Ideal for modular component blow valves

JIS symbol

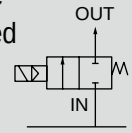

No thread open
IN gasket
Expandable
RoHS
CAD

Specifications

Item	CXU10-EXA			
Working fluid	Compressed air			
Working pressure differential MPa	0.01 (≈1.5 psi, 0.1 bar) to 0.7 (≈100 psi, 7 bar) *4			
Max. working pressure MPa	0.7 (≈100 psi, 7 bar)			
Proof pressure MPa	1.05 (≈150 psi, 10.5 bar)			
Fluid temperature °C	0 (32°F) to 55 (131°F)			
Ambient temperature °C	-5 (23°F) to 55 (131°F)			
Atmosphere	Place free of corrosive gas/explosive gas and not exposed to water			
Valve structure	Pilot operated diaphragm drive			
Valve section leakage cm^3/min	10 or less			
Mounting orientation	Unrestricted			
Port size (IN)	None			
Connecting wire bore size (OUT)	Push-in fitting ø6	Radial push-in fitting ø6	Push-in fitting ø8	Radial push-in fitting ø8
C[$dm^3/(s \cdot bar)$] *2	1.6		3.0	
b	0.37		0.32	
Weight kg *3	0.098	0.095	0.098	0.1
Electrical specifications				
Rated voltage	100 VAC (50/60 Hz), 24 VDC *1			
Apparent power VA	1.2			
Power consumption W DC	0.6			
Thermal class	B			
Degree of protection (IEC Standard 529)	Lead wire: IPX0, with DIN terminal box: IPX5			

*1: The voltage fluctuation range is ±10%.
*2: Effective cross-sectional area S and sonic conductance C are converted as S ≈ 5.0 × C.
*3: Weight with the DIN terminal box is +0.02 kg.
*4: When using with an extremely small flow rate or when the solenoid valve's secondary side is restricted, set the pressure so that the pressure difference does not fall below 0.01 MPa with the valve opened. (Refer to precautions on pages 1051 to 1055.) Contact CKD if the differential pressure before/after the solenoid valve with the valve opened is small.

How to order

CXU10-EXA - C6 - 2C - 1

- Ⓐ Port size (OUT)
- Ⓑ Coil option
- Ⓒ Voltage

Code	Description
Ⓐ Port size (OUT)	
C6	ø6 push-in fitting
CL6	ø6 radial push-in fitting
C8	ø8 push-in fitting
CL8	ø8 radial push-in fitting

Ⓑ Coil option *1, *2		
2C	Standard	Lead wire (without surge suppressor)
2H	Option	DIN terminal box (Pg7), with lamp (inside terminal box)
2HS		DIN terminal box (Pg7), with lamp/ surge suppressor (inside terminal box)

Ⓒ Voltage *1	
1	100 VAC 50/60 Hz
3	24 VDC

*1: Refer to the table on the left for the available coil option and voltage combinations.
*2: Contact CKD for models with M12 connector cables.

⚠ Precautions for model No. selection

Note: The joiner set (joiner, bolt, O-ring) and one gasket are enclosed.

Coil option	Voltage 1	Voltage 3
2C	●	●
2H	●	
2HS		●

Select from the combinations indicated with ● above.

Internal structure and parts list

● CXU10-EXA

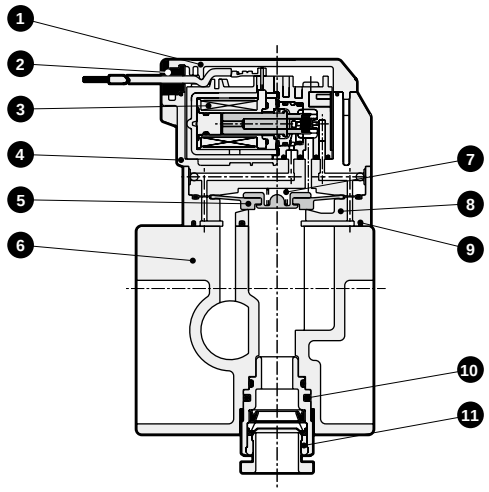

No.	Part name	Material
1	Cover (*1)	Polybutylene terephthalate
2	Bush	Nitrile rubber
3	Coil assembly	-
4	Body	Polyphenylene sulfide
5	Diaphragm assembly	Hydrogenated nitrile rubber/polyphenylene sulfide
6	Body	Polyamide resin
7	Spring	Stainless steel
8	Valve body	Polybutylene terephthalate
9	Gasket	Hydrogenated nitrile rubber
10	Pin	Stainless steel
11	Cartridge fitting	

*1: Polyamide resin is used when the DIN terminal box is attached.

Dimensions

● Grommet lead wire

CXU10-EXA-*-2C-*

Cartridge fitting: Straight

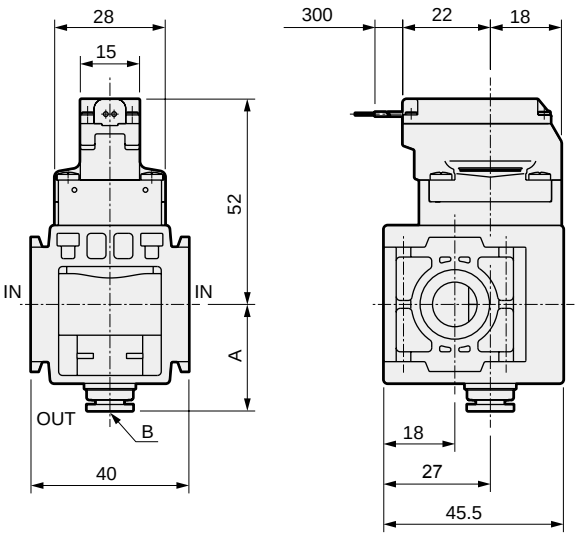

Cartridge fitting: Elbow

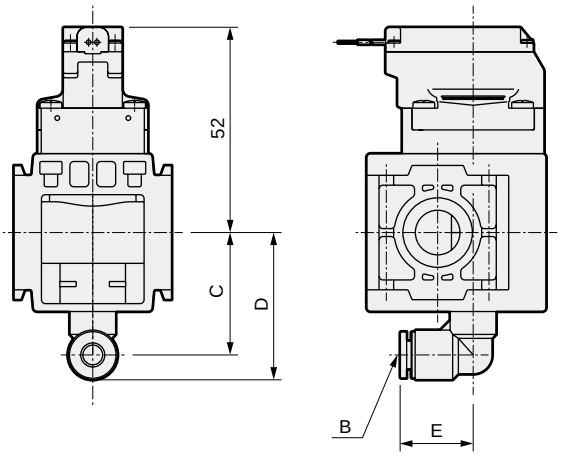

● With DIN terminal box (Pg7)

CXU10-EXA-*-2HS-*

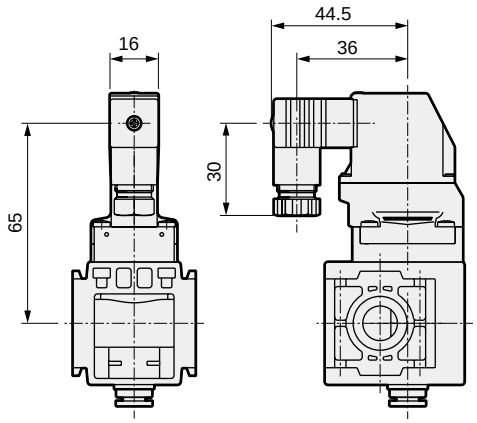

Optional dimensions table

Option	A	B	C	D	E
C6	27	Push-in fitting ø6	-	-	-
CL6	-	Push-in fitting ø6	31	37	18.5
C8	27	Push-in fitting ø8	-	-	-
CL8	-	Push-in fitting ø8	32	39	21

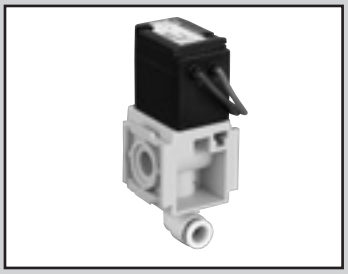

Direct acting 2-port solenoid valve

CXU10-FAB3 Series

NC (open when energized)
Modular connection with 1000 Series enabled Ideal for modular component blow valves

JIS symbol

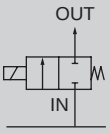

No thread open
IN gasket
Expandable
RoHS
CAD

Specifications

Item		CXU10-FAB3
Working fluid		Compressed air
Working pressure differential MPa		AC:0 (≈0 psi, 0 bar) to 1.0 (≈150 psi, 10 bar), DC:0 (≈0 psi, 0 bar) to 0.6 (≈87 psi, 6 bar)
Max. working pressure MPa		1.0 (≈150 psi, 10 bar)
Proof pressure MPa		1.5 (≈220 psi, 15 bar)
Fluid temperature °C		AC:5 (41°F) to 60 (140°F), DC:5 (41°F) to 40 (104°F)
Ambient temperature °C		AC:5 (41°F) to 60 (140°F), DC:5 (41°F) to 40 (104°F)
Atmosphere		Place free of corrosive gas/explosive gas and not exposed to water
Valve structure		Direct acting poppet structure
Valve section leakage cm^3/min		10 or less
Mounting orientation		Unrestricted
Port size (IN)		None
Orifice size mm		3
C[$dm^3/(s \cdot bar)$] *1		1.2
b		0.56
Weight kg		0.25
Electrical specifications		
Rated voltage		100 VAC, 24 VDC
Rated power VA	50 Hz	When holding: 7.5, when starting: 20
	60 Hz	When holding: 5.5, when starting: 17
Power consumption W	50 Hz	4.0
	60 Hz	3.4
	DC	6.5
Thermal class		B

*1: Effective cross-sectional area S and sonic conductance C are converted as S ≈ 5.0 × C.

How to order

CXU10-FAB3 - C6 - 2C - 3

- A Port size (OUT)
- B Coil option
- C Rated voltage

Code	Description
A Port size (OUT)	
C6	ø6 push-in fitting
CL6	ø6 radial push-in fitting
C8	ø8 push-in fitting
CL8	ø8 radial push-in fitting
B Coil option	
2C	Grommet lead wire
2HS	DIN terminal box with lamp/surge suppressor (Pg11)
C Rated voltage	
1	100 VAC 50/60 Hz,110 VAC 60 Hz
3	24 VDC

⚠ Precautions for model No. selection

Note: The joiner set (joiner, bolt, O-ring) and one gasket are enclosed.

Internal structure and parts list

● CXU10-FAB3

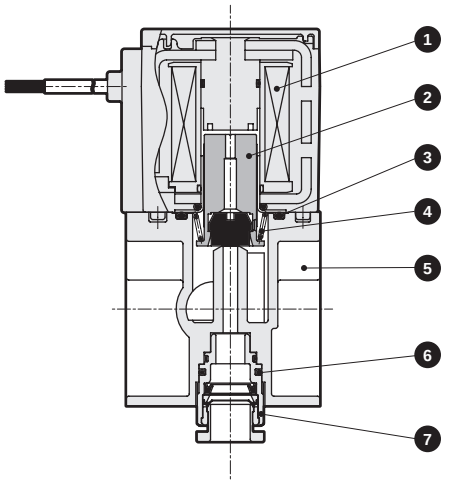

No.	Part name	Material
1	Coil assembly	Class B molded coil
2	Plunger assembly	Stainless steel, nitrile rubber
3	O-ring	Nitrile rubber
4	Spring	Stainless steel
5	Body	Polyamide resin
6	Pin	Stainless steel
7	Cartridge fitting	

Dimensions

● Grommet lead wire

CXU10-FAB3-*-2C-*

Cartridge fitting: Straight

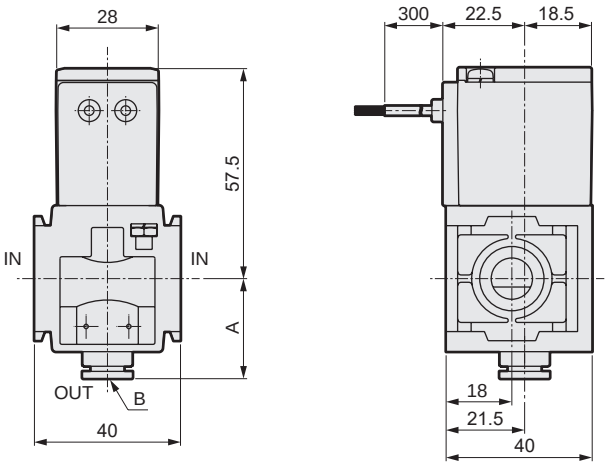

Cartridge fitting: Elbow

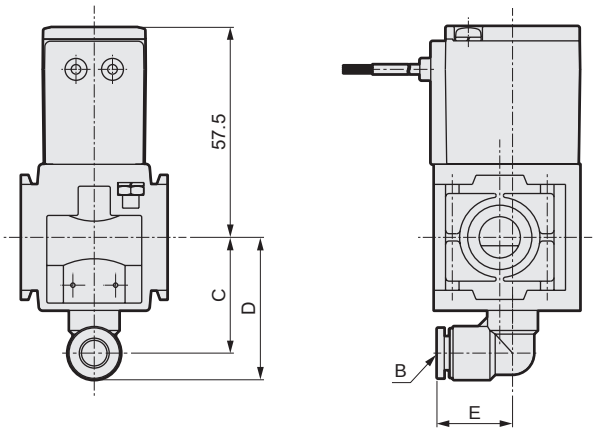

● With DIN terminal box (Pg11)

CXU10-FAB3-*-2HS-*

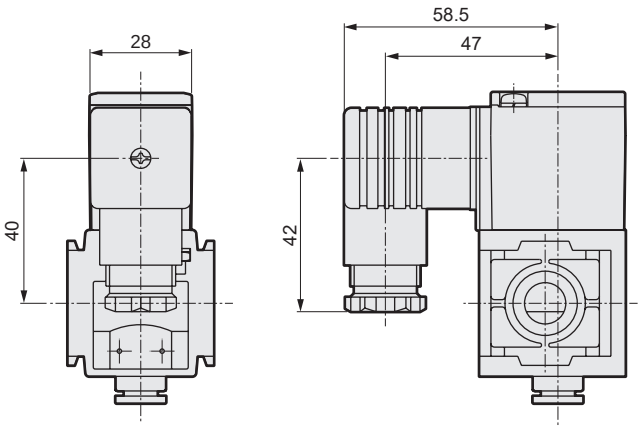

Optional dimensions table

Option	A	B	C	D	E
C6	27	Push-in fitting ø6	-	-	-
CL6	-	Push-in fitting ø6	31	37	18.5
C8	27	Push-in fitting ø8	-	-	-
CL8	-	Push-in fitting ø8	32	39	21



Direct acting 2-port solenoid valve

CXU30-FAB4U Series

NC (open when energized)
Modular connection with 2000, 3000, 4000 Series enabled
Interchangeable with GFAB actuator assembly

JIS symbol

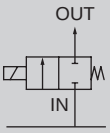

No thread open
IN gasket
Expandable

Specifications

Item		CXU30-FAB4U
Working fluid		Compressed air
Working pressure differential MPa		AC:0 (≈0 psi, 0 bar) to 1.0 (≈150 psi, 10 bar), DC:0 (≈0 psi, 0 bar) to 0.9 (≈130 psi, 9 bar)
Max. working pressure MPa		1.0 (≈150 psi, 10 bar)
Proof pressure MPa		1.5 (≈220 psi, 15 bar)
Fluid temperature °C		AC:5 (41°F) to 60 (140°F),DC:5 (41°F) to 40 (104°F)
Ambient temperature °C		AC:5 (41°F) to 60 (140°F),DC:5 (41°F) to 40 (104°F)
Atmosphere		Place free of corrosive gas/explosive gas and not exposed to water
Valve structure		Direct acting poppet structure
Valve section leakage cm^3/min(ANR)		10 or less
Mounting orientation		Unrestricted
Port size	IN	None
	OUT	Rc1/4
Orifice size mm		4
C[$dm^3/(s \cdot bar)$] *1		2.1
b		0.34
Weight kg		0.55
Electrical specifications		
Rated voltage		100 VAC, 24 VDC
Rated power VA	50 Hz	When holding: 15, when starting: 40
	60 Hz	When holding: 11, when starting: 35
Power consumption W	50 Hz	7.5
	60 Hz	6.5
	DC	8.0
Thermal class		B

*1: Effective cross-sectional area S and sonic conductance C are converted as S ≈ 5.0 × C.

How to order

CXU30-FAB4U-8L - 2C - 3

Ⓐ Coil option
Ⓑ Rated voltage

Code	Description
Ⓐ Coil option	
2C	Grommet lead wire
2HS	DIN terminal box with lamp/surge suppressor (Pg11)
Ⓑ Rated voltage	
1	100 VAC 50/60 Hz,110 VAC 60 Hz
3	24 VDC

⚠ Precautions for model No. selection

Note: The joiner set (joiner, bolt, O-ring) and one gasket are enclosed.

Internal structure and parts list

● CXU30-FAB4U

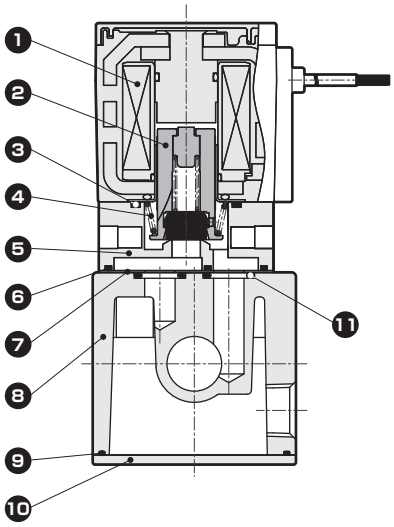

No.	Part name	Material
1	Coil assembly	Class B molded coil
2	Plunger assembly	Stainless steel, nitrile rubber
3	O-ring	Nitrile rubber
4	Spring	Stainless steel
5	Body	Polyphenylene sulfide
6	Gasket	Nitrile rubber
7	Plate	Stainless steel
8	Body	Aluminum die-casting
9	O-ring	Nitrile rubber
10	Base plate	Steel plate
11	O-ring	Nitrile rubber

Dimensions

● Grommet lead wire

CXU30-FAB4U-8L-2C-*

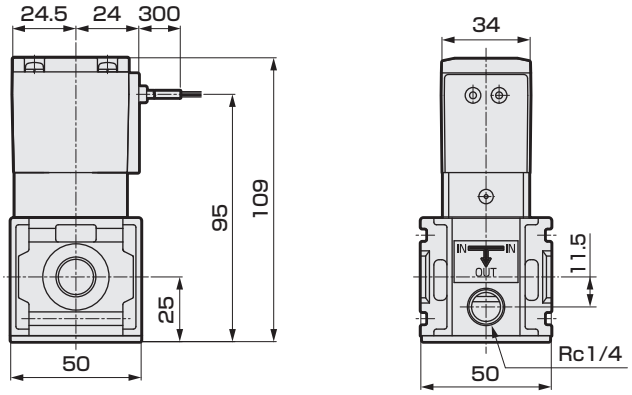

● With DIN terminal box (Pg11) type

CXU30-FAB4U-8L-2HS-*

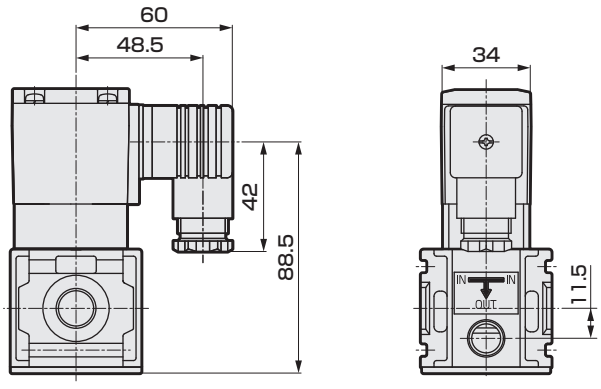



Pilot kick 2-port solenoid valve

CXU30-ADK Series

NC (open when energized)
diaphragm drive

Modular connection with 2000, 3000 and 4000 Series enabled

Suitable for modular component master valve

JIS symbol

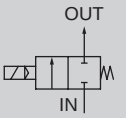

RoHS CAD Module dedicated Inline

Specifications

Item		CXU30-ADK
Working fluid		Compressed air
Working pressure differential MPa		AC:0 (≈0 psi, 0 bar) to 1.0 (≈150 psi, 10 bar), DC:0 (≈0 psi, 0 bar) to 0.7 (≈100 psi, 7 bar)
Max. working pressure MPa		2 (≈290 psi, 20 bar)
Proof pressure (water pressure) MPa		4 (≈580 psi, 40 bar)
Fluid temperature (*1) °C		Nitrile rubber: -10 (14°F) to 60 (140°F), fluoro rubber: 5 (41°F) to 60 (140°F)
Ambient temperature °C		-10 (14°F) to 60 (140°F)
Atmosphere		Place free of corrosive gas/explosive gas and not exposed to water
Valve structure		Pilot kick poppet, diaphragm drive
Valve section leakage cm^3/min		10 or less
Mounting orientation		Unrestricted
Port size		None
Orifice size mm		12
$C[dm^3/(s \cdot bar)]$ (*2)		10.4
b		0.46
Weight kg		0.65
Electrical specifications		
Rated voltage		100 VAC, 24 VDC
Apparent power VA	50 Hz	24.0
	60 Hz	19.0
Power consumption W	50 Hz	10.0
	60 Hz	8.0
	DC	11.0
Thermal class		B

*1: No freezing.
*2: Effective cross-sectional area S and sonic conductance C are converted as S ≈ 5.0 × C.

How to order

CXU30-ADK-00 - F 2C - 1

- A Sealant
- B Coil option
- C Rated voltage

Code	Description
A Sealant	
Blank	Nitrile rubber
F	Fluoro rubber
B Coil option	
2C	Grommet lead wire *1
2HS	DIN terminal box with lamp/surge suppressor (Pg11)
C Rated voltage	
1	100 VAC 50/60 Hz,110 VAC 60 Hz
3	24 VDC

*1: The coil option 2C is available for rated voltage [1] only.

⚠ Precautions for model No. selection

Note: The joiner set (joiner, bolt, O-ring) is enclosed.

Internal structure and parts list

● CXU30-ADK

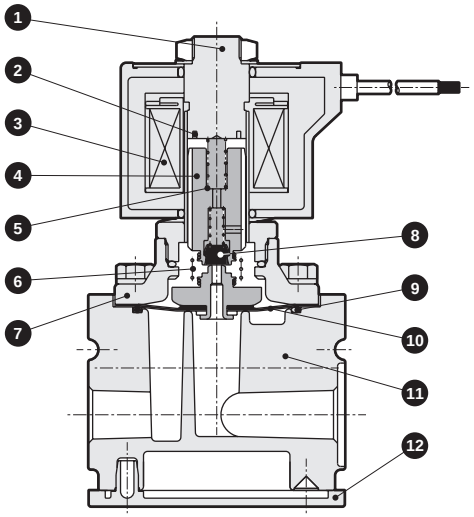

No.	Part name	Material
1	Core assembly	Stainless steel
2	Shading coil	Copper
3	Coil	-
4	Plunger assembly	Stainless steel
5	Plunger spring	Stainless steel
6	Kick spring	Stainless steel
7	Body	Copper alloy casting
8	Seal	Nitrile rubber (fluoro rubber)
9	Diaphragm assembly	Stainless steel (nitrile/fluoro rubber)
10	O-ring	Nitrile rubber (fluoro rubber)
11	Body	Aluminum die-casting
12	Plate cover	ABS resin

* ( ) is when selecting Ⓐ Sealant F (fluoro rubber).

Dimensions

● Grommet lead wire
CXU30-ADK-00-*2C-*

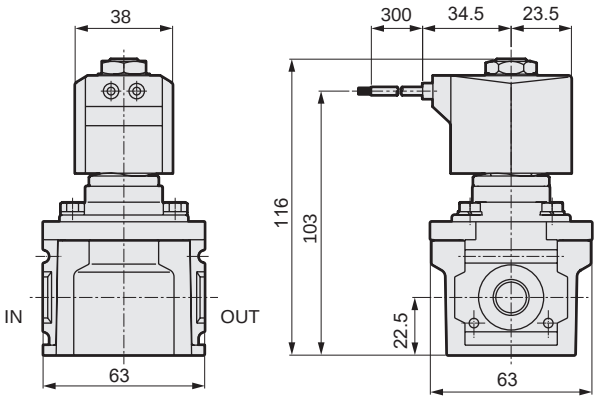

● With DIN terminal box (Pg11)
CXU30-ADK-00-*2HS-*

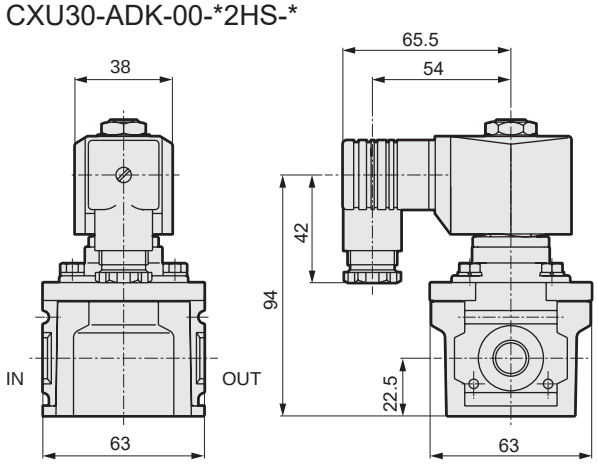

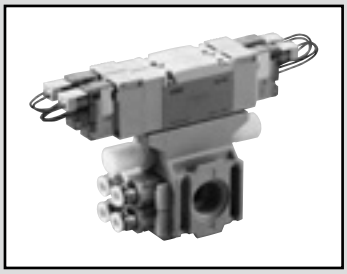

Pilot operated 5-port valve

CXU30-4G2R Series

5-port solenoid valve for modular connection with 2000, 3000, 4000 Series

No thread open
IN gasket
RoHS
CAD
Expandable

JIS symbol

2-position single

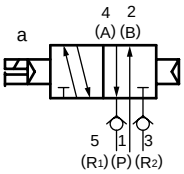

2-position double

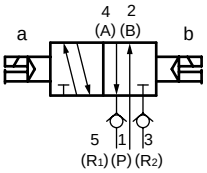

3-position all ports closed

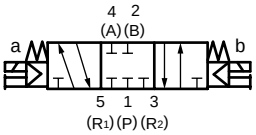

3-position A/B/R connection

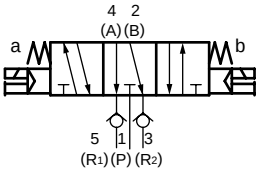

3-position P/A/B connection

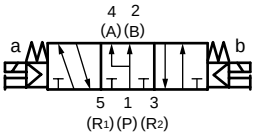

(Example) CXU30-4G2R-13-C6-B-1

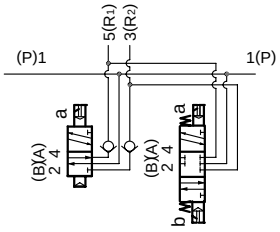

Common specifications

Item		Description
Valve and operation		Pilot operated soft spool valve
Working fluid		Compressed air
Max. working pressure MPa		0.7 (≈100 psi, 7 bar)
Min. working pressure MPa		0.2 (≈29 psi, 2 bar) (2-position, 3-position)
Proof pressure MPa		1.05 (≈150 psi, 10.5 bar)
Fluid temperature °C		5 (41°F) to 55 (131°F)
Ambient temperature °C		-5 (23°F) to 55 (131°F) (no freezing)
Atmosphere		Place free of corrosive gas/explosive gas and not exposed to water
Port size	A/B port	Push-in fitting ø4, ø6, ø8
	P port	None (connectable with 3000 Series)
	R1/R2 port	Rc1/4
Manual operating device		Non-locking/locking common
Pilot exhaust method		Main valve/pilot valve common exhaust
Lubrication *1		Not required
Degree of protection *2		Dust-proof
Vibration/shock resistance m/s^2		50 or less/300 or less

*1: Use turbine oil Class 1 ISO VG32 for lubrication.
Excessive or intermittent lubrication results in unstable operation.
*2: Avoid water drops or oil, etc., during use.
IP65 (jet-proof) applies for DIN terminal box specifications.
However, the specified outer diameter of the applicable cord and tightening torque must be used for fixing in place.

Electrical specifications

Item		Description
Rated voltage V	DC	24
	AC	100
Rated voltage fluctuation range		±10%
Holding current A	24 VDC	0.017
	100 VAC	0.009
Power consumption W	24 VDC	0.4
Apparent power VA	100 VAC	0.98
Thermal class		B
Surge suppressor		Standard
Indicator		With indicator lamp (standard)

Weight

(Unit: kg)

Solenoid position			Description: Single valve	Description: Valve sub-base
Without solenoid valve: Masking plate			0.02	0.32
2-position	Single	E type connector	0.08	
		DIN terminal	0.10	
	Double	E type connector	0.10	
		DIN terminal	0.14	
3-position	All ports closed	E type connector	0.11	
		DIN terminal	0.15	

The weight is calculated as the discrete valve (1) + the discrete valve (2) + the valve sub-base.

Flow characteristics

Solenoid position		P→A/B		A/B→R1/R2	
		C[dm³/(s·bar)]	b	C[dm³/(s·bar)]	b
2-position		2.3	0.29	1.8	0.24
3-position	All ports closed	2.1	0.27	2.3	0.27
	A/B/R connection	2.1	0.34	1.7	0.2
	P/A/B connection	2.2	0.34	2.4	0.29

*1: Effective cross-sectional area S and sonic conductance C are converted as S ≈ 5.0 × C.
*2: Values for 2-position and A/B/R connection are the values when an exhaust check valve is integrated.

How to order

CXU30-4G2R- 3 3 - C6 - E20 S - 3

Ⓐ Model No.

Ⓑ Solenoid valve (1) switching position *2, *5, *6

Ⓒ Solenoid valve (2) switching position *2, *5, *6

Ⓓ Port size (OUT)

Ⓔ Electrical connections

Ⓕ Option

Ⓖ Rated voltage

Code	Description
Ⓑ Solenoid valve (1) switching position	
0	Without solenoid valve; Masking plate
1	2-position single; with exhaust check valve
2	2-position double; with exhaust check valve
3	3-position all ports closed
4	3-position A/B/R connection; with exhaust check valve
5	3-position P/A/B connection
Ⓒ Solenoid valve (2) switching position	
0	Without solenoid valve; Masking plate
1	2-position single; with exhaust check valve
2	2-position double; with exhaust check valve
3	3-position all ports closed
4	3-position A/B/R connection; with exhaust check valve
5	3-position P/A/B connection
Ⓓ Port size (OUT)	
C4	ø4 push-in fitting
C6	ø6 push-in fitting
CL6	ø6 radial push-in fitting (facing rear)
C8	ø8 push-in fitting
Ⓔ Electrical connections	
B	DIN terminal box (Pg7) with surge suppressor/lamp
E20	E type connector lead wire (500 mm) with surge suppressor/lamp
Ⓕ Option	
Blank	None
S	Two silencers (SLW-8S) attached
Ⓖ Rated voltage	
1	100 VAC (rectifier integrated)
3	24 VDC

Refer to page 1039 for the solenoid valve model No. list.

⚠ Precautions for model No. selection

*1: The fitting that can be mounted on the R1 port is GWS□-8-S.
*2: The exhaust check valve is provided as standard. 3-position all ports closed and P/A/B connection are not provided with the exhaust check valve.
For the exhaust check valve, refer to page 1057.
*3: For solenoid valves (1)(2), if the port size, electrical connection, option or voltage is changed, it is processed as a customized product.
*4: The joiner set (joiner, bolt, O-ring) and one gasket are enclosed.
*5: Refer to dimensions for positions of solenoid valves (1) and (2).
*6: When masking plates are used for all solenoid valves, electrical connections and rated voltage options are blank.

Internal structure and parts list

● 2-position single
E type connector

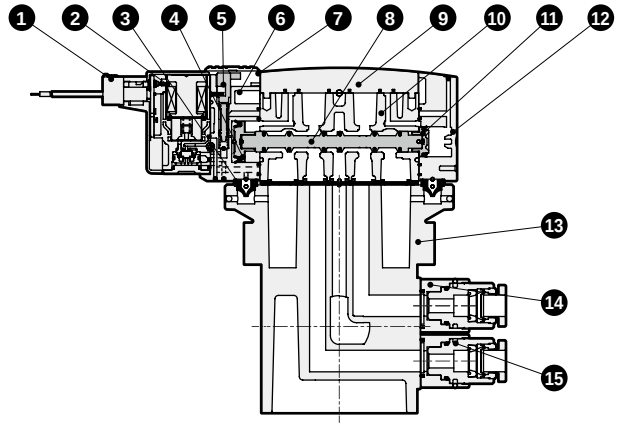

No.	Part name	Material
1	E type connector socket assembly	-
2	Coil assembly	-
3	Pilot exhaust check valve	Hydrogenated nitrile rubber
4	Piston D assembly	-
5	Manual operating device	Resin
6	Piston chamber	Resin
7	Manual protection cover	Resin
8	Spool assembly	-
9	Plate	Resin
10	Body	Aluminum alloy die-casting
11	Piston S assembly	-
12	Cap	Resin
13	Module sub-base	Aluminum alloy die-casting
14	Fitting adaptor	Resin
15	Cartridge push-in fitting	-
16	DIN terminal box assembly	-

● 2-position double
E type connector

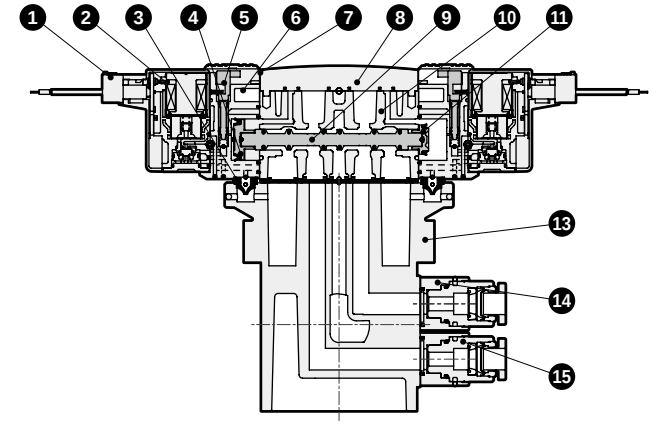

● 3-position
E type connector

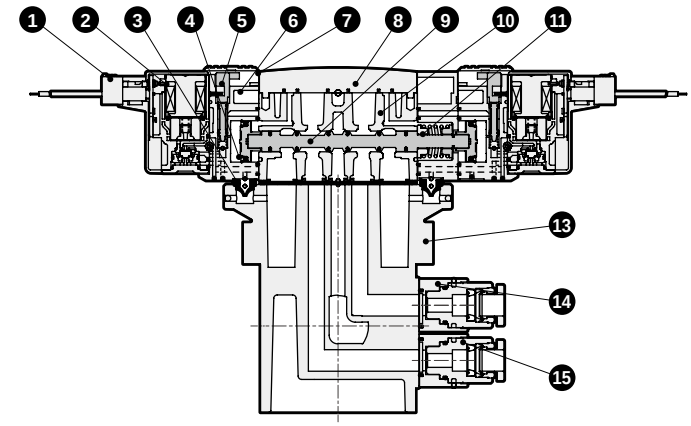

● DIN terminal box B

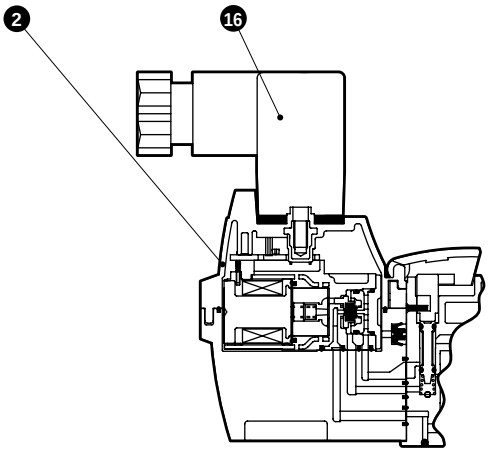

Dimensions

CXU30-4G2R-$^{0}_{1}$

● E type connector (E)
Cartridge fitting: Straight

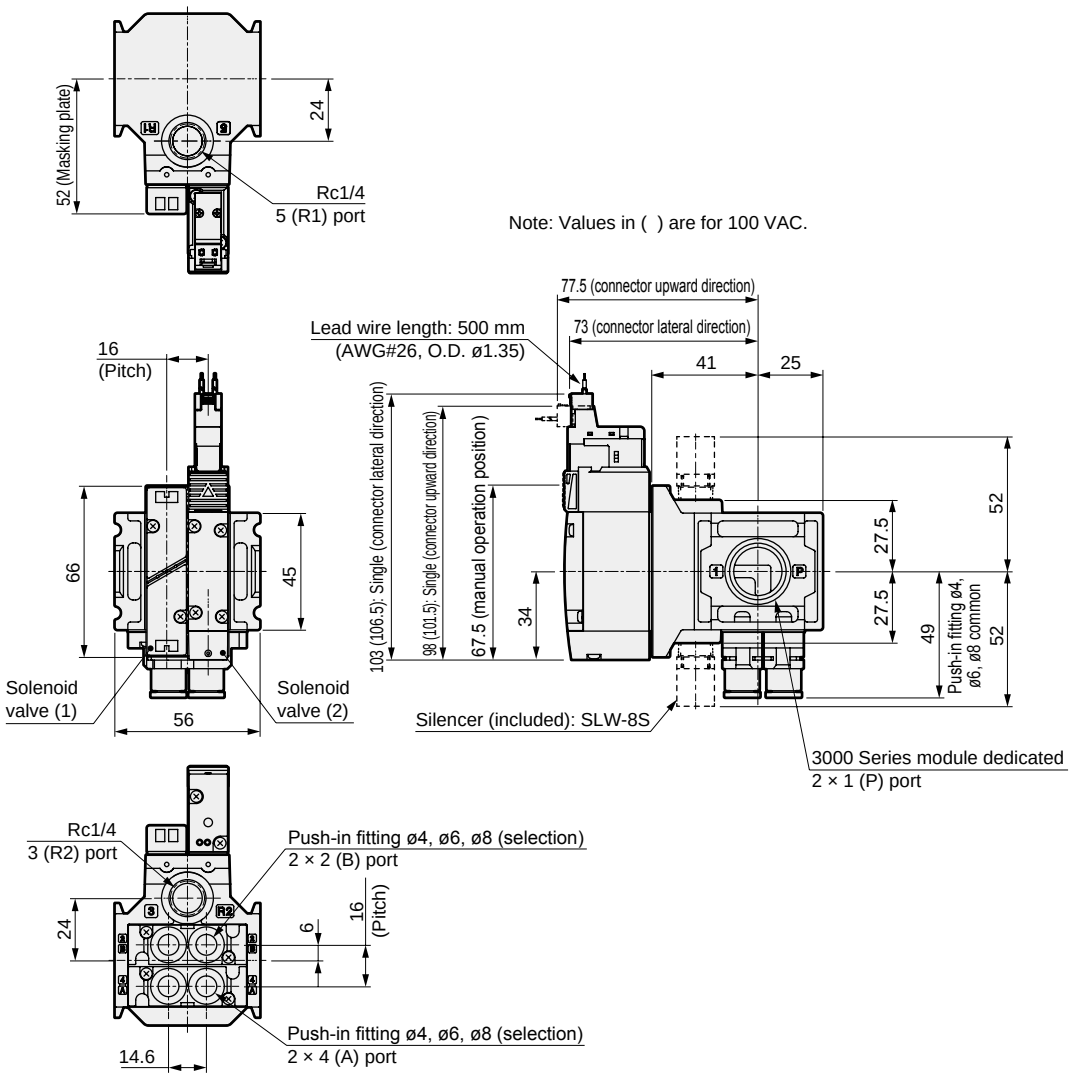

● DIN terminal box (B)
Cartridge fitting: Straight

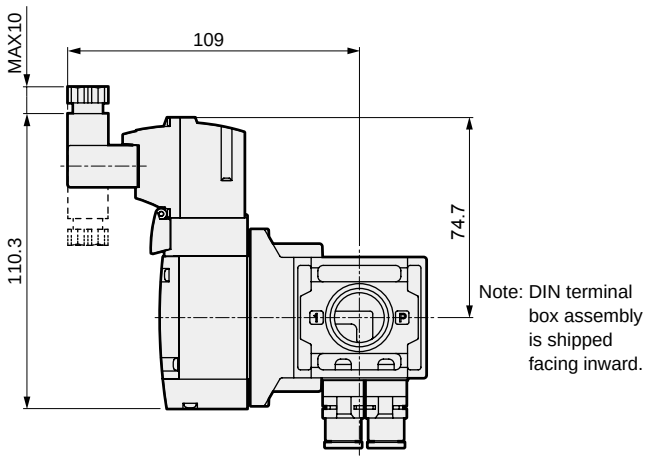

● Radial ø6 push-in fitting (facing rear)

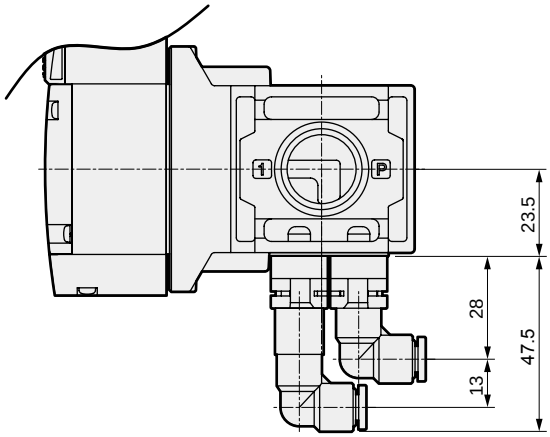

Dimensions

CXU30-4G2R-$^{2}_{3}$ 4 5

● E type connector (E)
Cartridge fitting: Straight

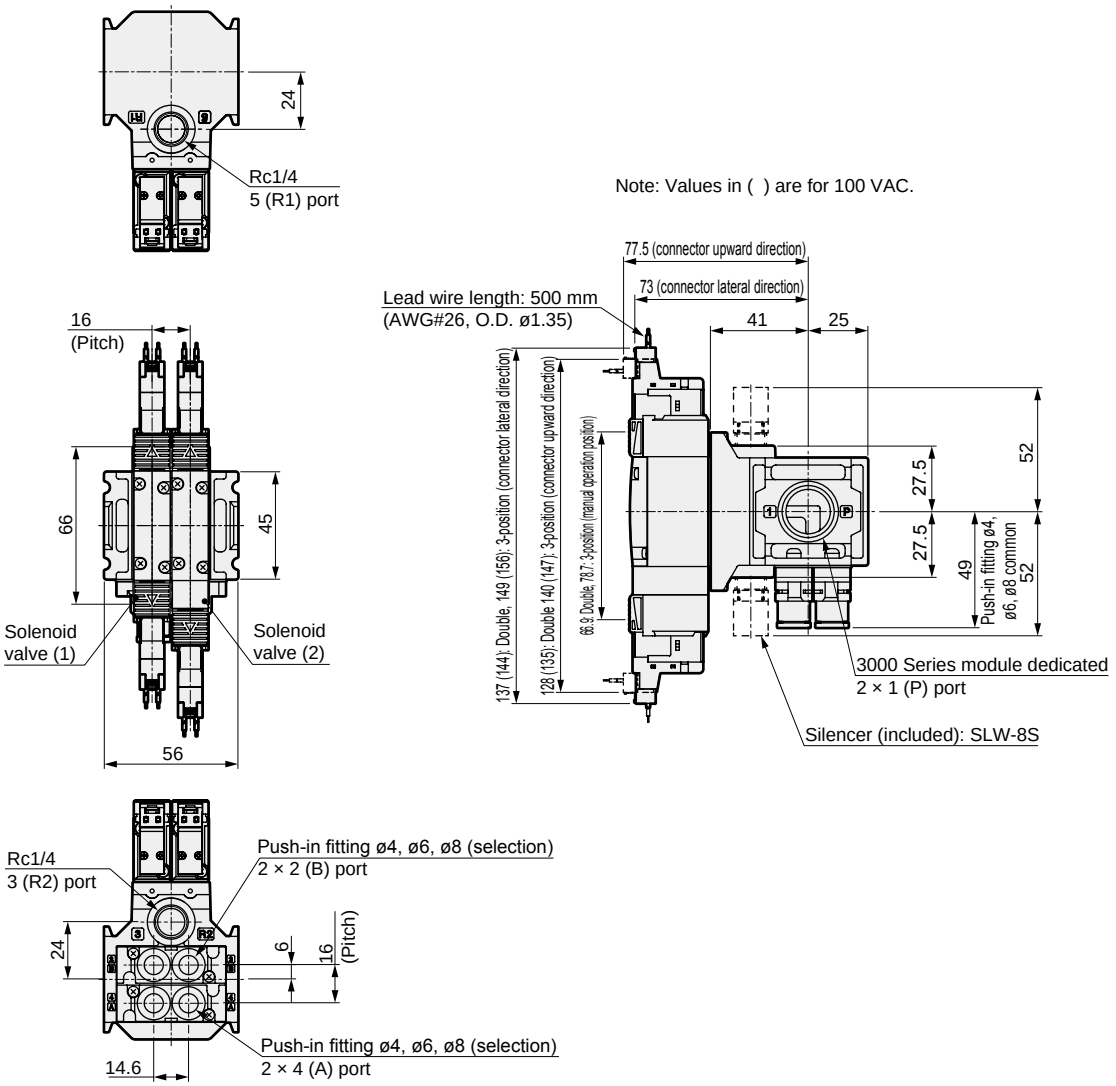

● DIN terminal box (B)
Cartridge fitting: Straight

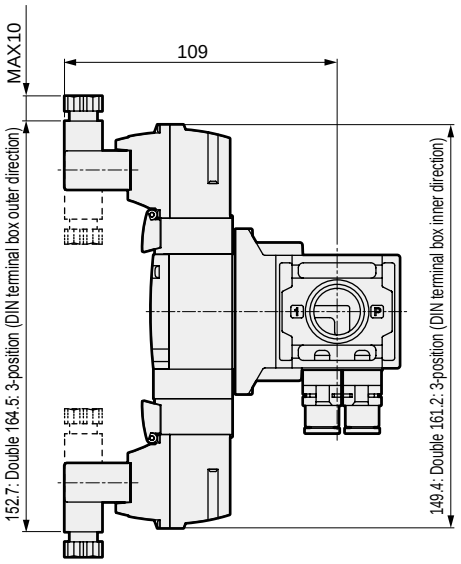

Note: DIN terminal box assembly is shipped facing inward.

● Radial ø6 push-in fitting (facing rear)

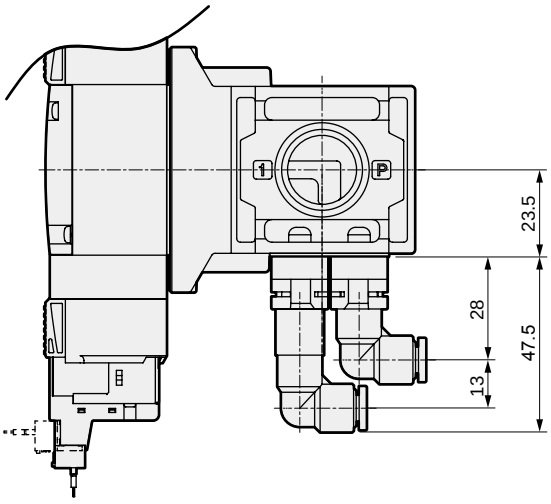

Solenoid valve model No. table

Option			Solenoid valve model No.
Solenoid valve switch position	Electrical connections	Rated voltage	
0			4G2R-MP
1	B	1	4GB219R-00-BH-1
		3	4GB219R-00-BH-3
	E20	1	4GB219R-00-E20H-1
		3	4GB219R-00-E20H-3
2	B	1	4GB229R-00-BH-1
		3	4GB229R-00-BH-3
	E20	1	4GB229R-00-E20H-1
		3	4GB229R-00-E20H-3
3	B	1	4GB239R-00-B-1
		3	4GB239R-00-B-3
	E20	1	4GB239R-00-E20-1
		3	4GB239R-00-E20-3
4	B	1	4GB249R-00-BH-1
		3	4GB249R-00-BH-3
	E20	1	4GB249R-00-E20H-1
		3	4GB249R-00-E20H-3
5	B	1	4GB259R-00-B-1
		3	4GB259R-00-B-3
	E20	1	4GB259R-00-E20-1
		3	4GB259R-00-E20-3

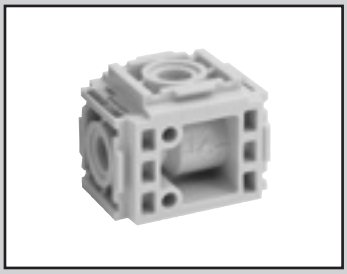

Module check valve

CXU10-CHV Series

Completely prevents reverse flow of fluid such as compressed air.
Capable of modular connection with FRL 1000 Series
Intermediate extraction of air with branching port

JIS symbol

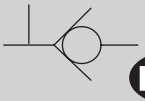

RoHS CAD No thread open IN gasket

Specifications

Item		Description
Working fluid		Compressed air
Max. working pressure MPa		1.0
Min. working pressure MPa		0.03
Proof pressure MPa		1.5
Port size		None
Ambient/fluid temperatures °C		5 to 60
Weight kg		0.08
Effective cross-sectional area	(IN → branching port) mm^2	28
	(IN→OUT) mm^2	28

How to order

CXU10-CHV - 00 - 6 - A

Ⓐ Port size
Ⓑ Option

Code	Description	
Ⓐ Port size		
Blank	Without pipe adaptor	*1
6	Pipe adaptor (Rc1/8") attached	*2
8	Pipe adaptor (Rc1/4") included	*2
10	Pipe adaptor (Rc3/8") included	*2
MA	Masking adaptor attached	*3
Ⓑ Option		
Blank	No option	
A	Fluoro rubber specifications	

⚠ Precautions for model No. selection

*1: The joiner set (joiner, bolt, O-ring) and one gasket are attached.
*2: Pipe adaptor x 1, the joiner set (joiner, bolt, O-ring), and two gaskets are attached.
*3: A masking adaptor, the joiner set (joiner, bolt, O-ring), and one gasket are attached.

How to use

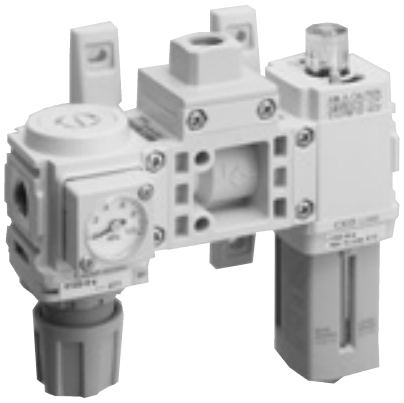

Internal structure and parts list

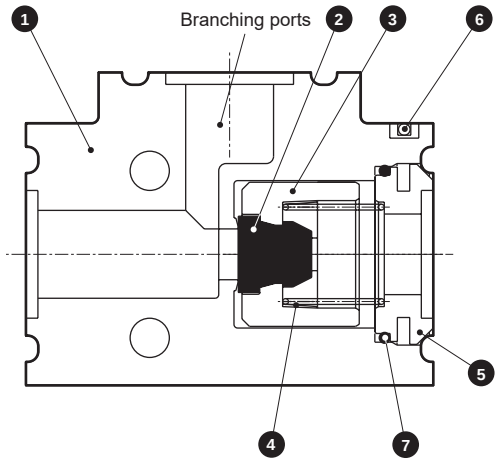

No.	Part name	Material
1	Body	Polyamide
2	Valving element	Nitrile rubber (fluoro rubber)
3	Valve guide	Polyacetal
4	Coil spring	Stainless steel
5	Cover	Aluminum alloy
6	Stopper pin	Stainless steel
7	O-ring	Nitrile rubber (fluoro rubber)

* Materials shown in ( ) are for option “A” (fluoro rubber specifications).

Dimensions

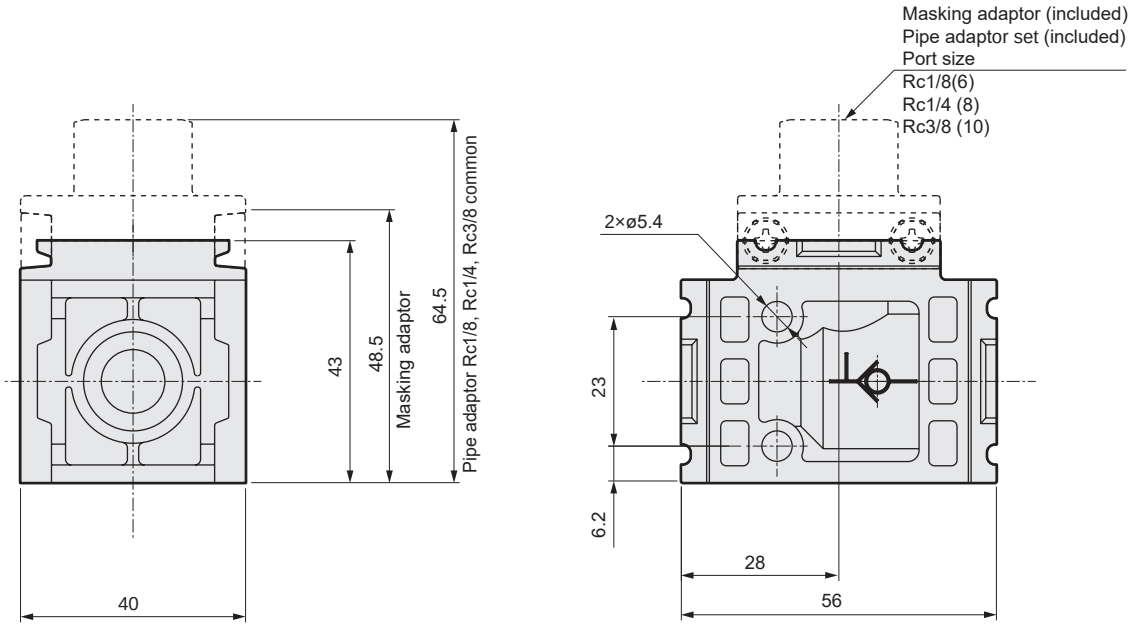

Safety precautions

⚠ CAUTION

● Check the JIS symbol on the body before connecting the piping.

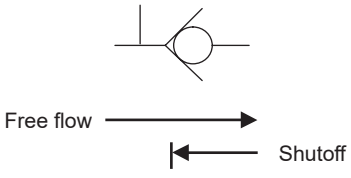

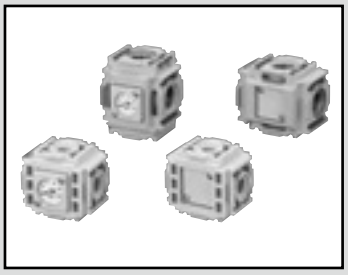

4-way distributor

CXU10-D4/CXU30-D4 Series

Module fitting section branches in 4 directions.
Fitting section can be mounted and removed from 1 direction.
Pressure gauge mounting port provided.

No thread open | RoHS | CAD | IN gasket

Specifications

Item	CXU10-D4	CXU30-D4
Working fluid	Compressed air	
Max. working pressure MPa	1.0 (≈150 psi, 10 bar)	
Proof pressure MPa	1.5 (≈220 psi, 15 bar)	
Branching fitting quantity	4	
Port size	None	Rc3/8,Rc1/2
Ambient / fluid temperatures °C	5 (41°F) to 60 (140°F)	
Weight kg	0.1	0.3

Usage methods



How to order

CXU10-D4 - 00 - T6

JIS symbol



Ⓐ Option

Code	Description
Ⓐ Option	
Blank	Without pressure gauge port (blanking plug mounted)
T6	Pressure gauge port Rc1/8
T8	Pressure gauge port Rc1/4
G401	With pressure gauge (G401)
R1	Pressure switch with display PPD mounted

How to order

CXU30-D4 - 15 - T6

JIS symbol

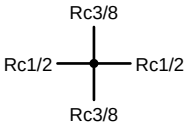

Ⓐ Option

Code	Description
Ⓐ Option	
Blank	Without pressure gauge port (blanking plug mounted)
T6	Pressure gauge port Rc1/8
T8	Pressure gauge port Rc1/4
G401	With pressure gauge (G401)
R1	Pressure switch with display PPD mounted

⚠ Precautions for model No. selection

*1: CXU30-D4 can be connected to 2000 Series, 3000 Series and 4000 Series.
*2: There are four connection sections. The joiner sets and gaskets should be purchased and assembled accordingly.
*3: The joiner set (joiner, bolt, O-ring) and one gasket are enclosed.

Internal structure and parts list

● CXU10-D4

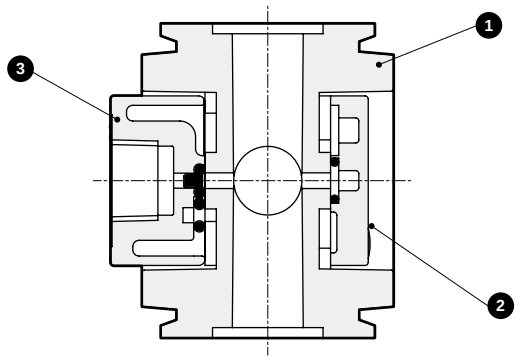

● CXU30-D4

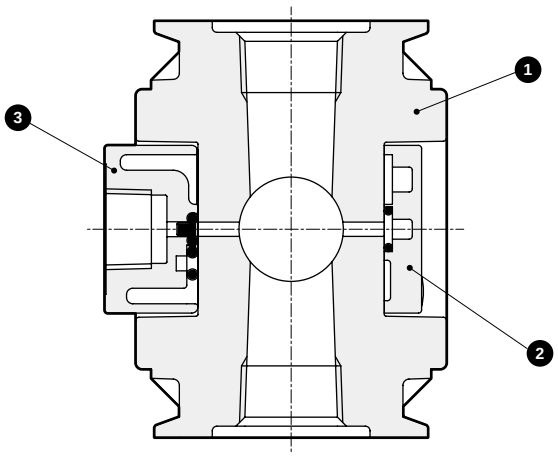

No.	Part name	Material	
		CXU10-D4	CXU30-D4
1	Body	Polyamide resin	Aluminum alloy die-casting
2	Blanking plug assembly	PBT resin, nitrile rubber, steel	
3	Gauge plug assembly	Polyamide resin, nitrile rubber, steel	
	Pressure gauge (G401)	PBT resin, nitrile rubber, polyacetal resin, polycarbonate resin, copper alloy, steel	

Dimensions

● CXU10-D4

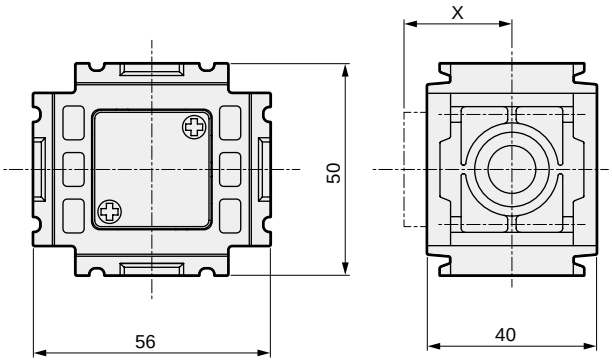

● CXU30-D4

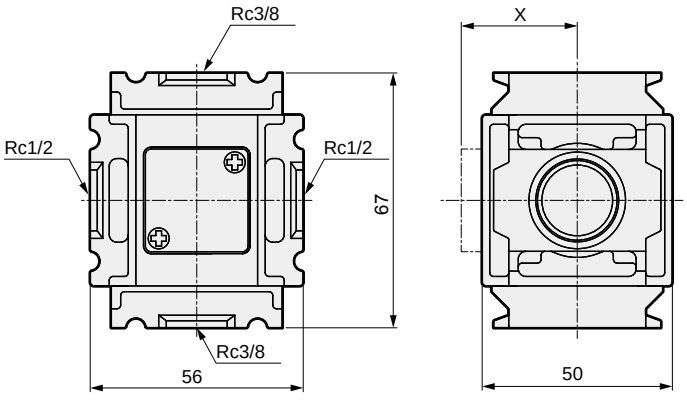

Optional dimensions table

Option	X
T6	25.5
T8	25.5
G401	25.5
R1	40

Optional dimensions table

Option	X
T6	30.5
T8	30.5
G401	30.5
R1	45

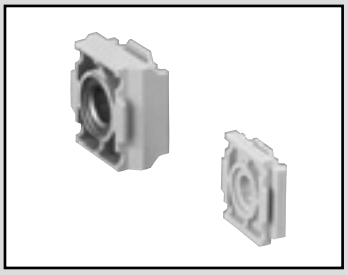

Turn adaptor

CXU10-TA/CXU30-TA Series

Rotates module fitting section by 90 degrees.
Direction of module components can be changed.

No thread open

RoHS CAD IN gasket

Specifications

Item	CXU10-TA	CXU30-TA
Working fluid	Compressed air	
Max. working pressure MPa	1.0 (≈150 psi, 10 bar)	
Proof pressure MPa	1.5 (≈220 psi, 15 bar)	
Port size	None	
Ambient / fluid temperatures °C	5 (41°F) to 60 (140°F)	
Weight kg	0.03	0.12

Usage methods



How to order

CXU10 - TA - 00

Ⓐ Model No.

Code	Description
Ⓐ Model No.	
CXU10	1000 Series
CXU30	3000 Series

Precautions for model No. selection

*1: CXU30-TA can be connected to 2000 Series, 3000 Series and 4000 Series.
*2: The joiner set (joiner, bolt, O-ring) and one gasket are enclosed.

Internal structure and parts list/dimensions

● CXU10-TA

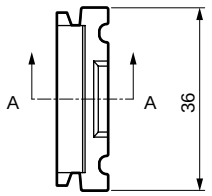

Top

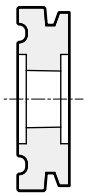

Cross-section A-A

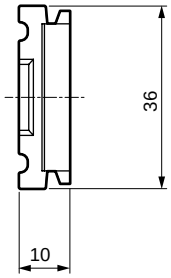

Front

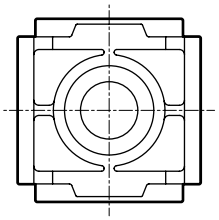

Side

● CXU30-TA

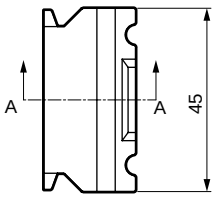

Top

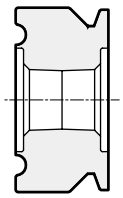

Cross-section A-A

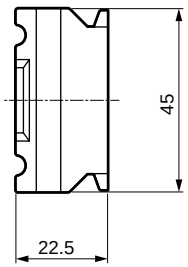

Front

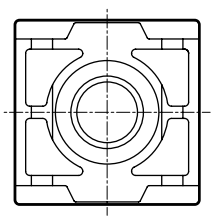

Side

No.	Part name	Material	
		CXU10-TA	CXU30-TA
1	Body	Polyamide resin	Aluminum alloy die-casting

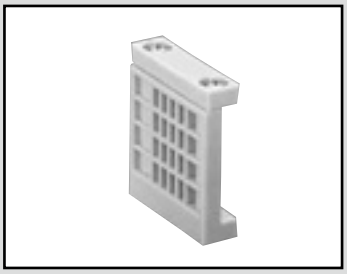

Masking adaptor

CXU10-MA Series

Used for masking the fitting section of the 1000 Series.

RoHS CAD

Specifications

Item	CXU10-MA
Working fluid	Compressed air
Max. working pressure MPa	1.0 (≈150 psi, 10 bar)
Proof pressure MPa	1.5 (≈220 psi, 15 bar)
Port size	None
Ambient / fluid temperatures °C	5 (41°F) to 60 (140°F)
Weight kg	0.02

Usage methods



How to order

CXU10-MA - 00 - B

Ⓐ Option

Code	Description
Ⓐ Option	
Blank	Joiner
B	T type bracket (B110-W)
BH	T type bracket (B110-H-W)

⚠ Precautions for model No. selection

*1: One O-ring is included.
*2: A hex nut for fixing the T type bracket is included with the T type bracket.

Internal structure and parts list/dimensions

● CXU10-MA

Option: Blank

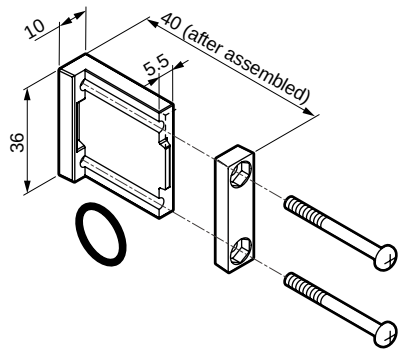

Option: B, BH

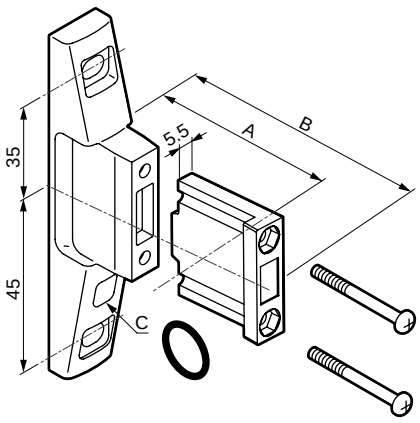

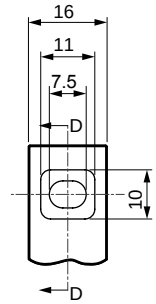

Bracket section details

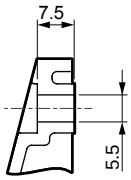

Cross section DD

Optional dimensions table

Option	A	B	C
B	40	60	-
BH	45	65	Identification "H"

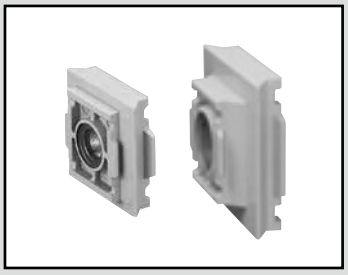

Module conversion adaptor

CXU13-CA/CXU48-CA Series

Capable of connecting 1000 Series with 2000/3000/4000 Series and 2000/3000/4000 Series with 6000/8000 Series.

No thread open

RoHS CAD IN gasket

Specifications

Item	CXU13-CA	CXU48-CA
Working fluid	Compressed air	
Max. working pressure MPa	1.0 (≈150 psi, 10 bar)	
Proof pressure MPa	1.5 (≈220 psi, 15 bar)	
Port size	None	
Ambient / fluid temperatures °C	5 (41°F) to 60 (140°F)	
Weight kg	0.04	0.13

Usage methods



How to order

CXU13 - CA - 00

Ⓐ Model No.

Code	Description
Ⓐ Model No.	
CXU13	1000 to 3000 Series conversion
CXU48	4000 to 8000 Series conversion

*1: CXU13-CA can be connected to 2000 Series, 3000 Series and 4000 Series.
The C1000-J100, C4000-J400 joiner set (joiner, bolt, O-ring) and one gasket are enclosed.
*2: CXU48-CA can be connected to 2000/3000/4000 Series and 6000/8000 Series.
The C4000-J400-W, C8000-J800-W joiner set (joiner, bolt, O-ring), and one gasket are enclosed.

Internal structure and parts list/dimensions

● CXU13-CA

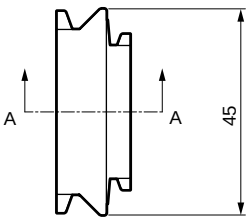

Top

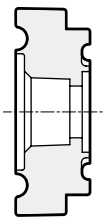

Cross-section A-A

● CXU48-CA

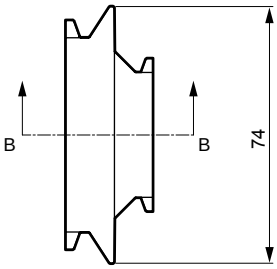

Top

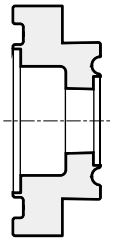

Cross section B-B

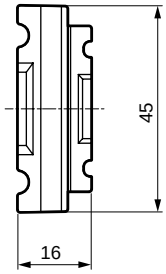

Front

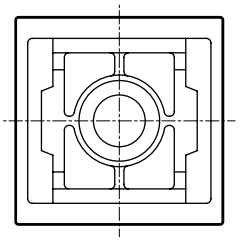

Side

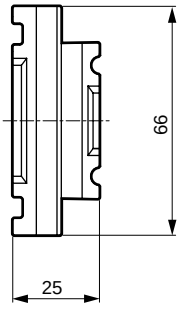

Front

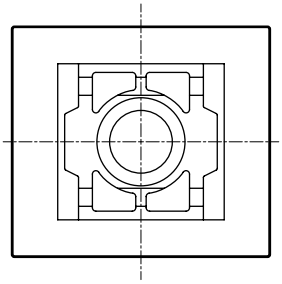

Side

No.	Part name	Material
1	Body	Aluminum alloy die-casting

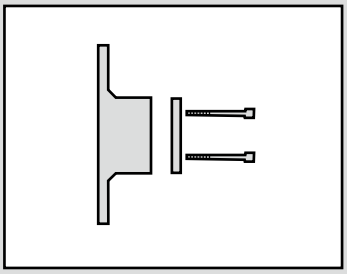

Bracket/joiner

B-W/J-W Series

O-ring/gasket/pipe plug

ORING/GASKET/CXU-PP Series

RoHS CAD

Dimensions and applications

T type bracket set

● Model No.: B110-W/B110-H-W/B310-W/B410-W/B810-W

● Applications



Note: By using B110-H-W, the 1000 Series can be adjusted to the same height as the 3000 Series.

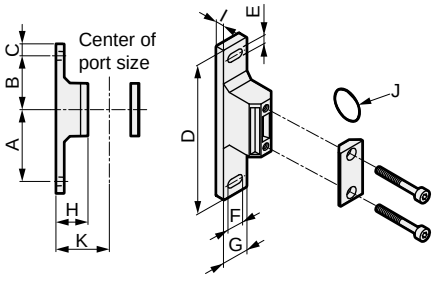

Model No.	Compatible series	A	B	C	D	E	F	G	H	I	J	K
B110-W	1000 Series	45	35	10	100	5.5	7.5	16	25	7.5	JAS0-2013	40
B110-H-W	1000 Series	45	35	10	100	5.5	7.5	16	30	7.5	JAS0-2013	45
B310-W	2000 Series	60	45	10	125	7	14	22	27	7	JISB2401-P21	45
	3000 Series											
B410-W	4000 Series	60	45	10	125	7	14	22	37	7	JISB2401-P21	55
B810-W	6000 Series	70	50	15	150	9	14	27	37	8	AS568-127	65
	8000 Series											

Joiner set

● Model No.: C1000-J100-W
C4000-J400-W
C8000-J800-W

● Applications



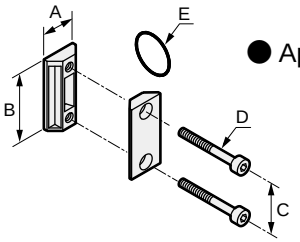

Model No.	Compatible series	A	B	C	D	E
C1000-J100-W	1000 Series	10	36	26	M3.5	JAS0-2013
C4000-J400-W	2000 Series 3000 Series 4000 Series	21	44	32	M5	JIS B2401-P21
C8000-J800-W	6000 Series 8000 Series	26	65	50	M6	AS568-127

O-ring, gasket

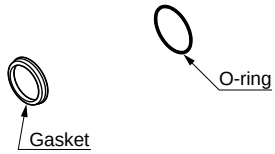

Material: NBR

Model No.	Compatible series	Standards
C1000-ORING	1000 Series	JASO-2013
C1000-GASKET		For CKD use only.
C4000-ORING	2000 Series 3000 Series	JIS B2401-P21
C4000-GASKET	4000 Series	For CKD use only.
C8000-ORING	6000 Series 8000 Series	AS568-127
C8000-GASKET		For CKD use only.

The sales unit is 5 pieces/set.

Pipe plug

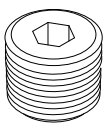

Material: Steel

Model No.	Thread standards
CXU-PP-6	R1/8
CXU-PP-8	R1/4
CXU-PP-10	R3/8
CXU-PP-15	R1/2

Note: Five pipe plugs are included in one set.

Fluid Control Components: Warnings and Cautions

Refer to the "General Purpose Valves (No.CB-03SA-1)" for precautions on general fluid control components. Be sure to read this section before use.

Product-specific cautions: Direct acting 2-port solenoid valve CXU10-FAB3, CXU30-FAB4U
Pilot kick 2-port solenoid valve CXU30-ADK

Design/selection

1. Safety design

⚠WARNING

- This product cannot be used as an emergency shut-off valve.
  The valves listed in this catalog are not designed as valves to ensure safety such as emergency shutoff valves. When using in such a system, always take separate measures that will ensure safety.
- Take measures to prevent physical harm or property damage in the event of failure of this product.

⚠CAUTION

- Leakage current from other fluid control components
  When using a PLC with a CR circuit to absorb the surge voltage generated from a switching element, etc., the leakage current could adversely affect the operation of the solenoid valve. Keep leakage current to less than the value given in the safety precautions for each product in this catalog or the value given for each product.

2. Working fluid

⚠WARNING

- Quality of fluid
  Foreign matter such as rust or dirt in fluid causes operation faults or leaks, and lowers product performance. Provide measures to remove foreign matter.
- Fluid temperature
  Use the product within the fluid temperature range.

3. Working environment

⚠WARNING

- Only explosion-proof solenoid valves and air operated valves can be used in an explosive atmosphere. Explosion-proof solenoid valves are not available for air units.
  Select from General Purpose Valves (No. CB-03SA-1).
- When using with AC voltage, a thrumming noise may be heard depending on the working conditions.
  If the noise is a problem because of the working environment, select DC voltage.
- Do not use this product in a corrosive gas atmosphere or an atmosphere that could affect the component materials.
- Do not use this product near a heat generating source or in a location where it may be exposed to radiant heat.
- Use this product within the specified ambient temperature range.
- When using this product in a cold climate, take the necessary measures to prevent freezing. When wrapping insulation around the solenoid valve, etc., do not wrap around the coil section.
- Take appropriate safeguards according to the degree of protection listed in the catalog specifications.
- Take appropriate safeguards when using this product in places where oil or welding spatter, etc. could come in contact with it.

4. Securing of space

⚠CAUTION

- Securing maintenance space
  Secure sufficient space for maintenance and inspection.

5. Leakage current

- Leakage current from other fluid control components
  When operating the solenoid valve with a programmable controller, etc., check that the output leakage current from the programmable controller is within the following specifications.

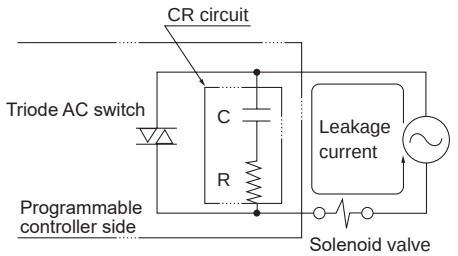

Model No. \ Voltage	100 VAC	200 VAC	12 VDC	24 VDC
CXU10-FAB3 CXU30-FAB4U	6 mA or less	3 mA or less	1 mA or less	2 mA or less
CXU30-ADK	6 mA or less	3 mA or less	2 mA or less	1 mA or less

Mounting, installation and adjustment

1. Installation

⚠ CAUTION

- Always thoroughly read the instruction manual before installing this product.
- Do not apply external force to the coil during installation.
- After installation, check for leaks from pipes, for proper wire connections and that the product is installed correctly.

2. Piping

⚠ CAUTION

- If the pipe vibrates when the solenoid valve is opened and closed, securely fix the piping.
- The solenoid valve may chatter depending on the circuit. Contact CKD if chattering occurs.
- If the piping cross-sectional area on the fluid inlet is reduced, the operation may become unstable due to differential pressure failure during valve operation. The piping on the fluid inlet must have a size that matches the valve port size, and must have no restricted sections. (CXU30-ADK)

3. Wiring

⚠ CAUTION

- Use the products within the allowable voltage range. Usage outside the allowable voltage range may lead to malfunction or coil damage.
- Provide a circuit breaker, such as a fuse, on the control circuit to protect electrical equipment.
- If the electric circuit system is vulnerable to solenoid surge, use a solenoid with a surge suppressor (optional), or insert a surge absorber, etc., in parallel to the solenoid.
- As a guide, use a wire with a nominal cross section of 0.5 mm^2 or more. Make sure that excessive force is not applied to the lead wire.
- Use of a switching circuit which does not generate contact chattering will increase the durability of the solenoid valves and motor driven valves.

Use/maintenance

1. Maintenance and inspection

⚠ WARNING

- Do not touch coils or actuators with hands or body parts while the power is ON or immediately after it is turned OFF.
  The solenoid valve coil and actuator will heat up when energized. Depending on the product, direct contact could cause burns.
- Do not touch the electrical wiring connections (bare, live parts) with hands or body when they are energized. There is a risk of electric shock.
  Touching electrical wiring connections while power is on may lead to electrical shock.
- Use the product within the max. working pressure and max. operating pressure differential ranges.
- To ensure ideal use, inspect the product every six months. This frequency varies with the frequency of use.

⚠ CAUTION

- Do not use valves as footing or place any heavy objects on top of the valves.
- If you use the products under a continuously energized state or infrequently, contact CKD.
- If the product has been out of use for one month or more, perform a test run before starting the actual operation.
- Carefully read the instruction manual before starting maintenance.
- Always turn the power OFF and release any fluids or pressure before starting maintenance.
- Check for clogging of the filter.

Use/maintenance

2. Disassembly/assembly

⚠CAUTION

- When cleaning the product, use a low-polluting cleaning agent such as a neutral detergent. (Note that the rubber parts must be replaced. There is a risk of expansion.)
- Contact CKD with questions about repair parts, etc.
- The coil assembly set screws should be tightened to the following tightening torque for disassembly and assembly.

Model No.	Coil assembly set screw
CXU10-FAB3	1.1 to 1.8 Nm
CXU30-FAB4U	
CXU30-ADK	

3. How to connect the terminal box

- DIN terminal box with lamp (Pg11)

(1) Use the following cabtyre cable.
- Cable O.D.: ø6 to ø10
- Nominal sectional area: 0.5 to 1.5 mm^2

(2) Put the crimp terminal for copper wire on the cabtyre cable's lead wire and crimp the terminal. The terminal box thread size is M3.

(3) Tighten the screws with the following tightening torque.
- Set screw tightening torque: 0.5 N·m
- Terminal screw tightening torque: 0.5 N·m

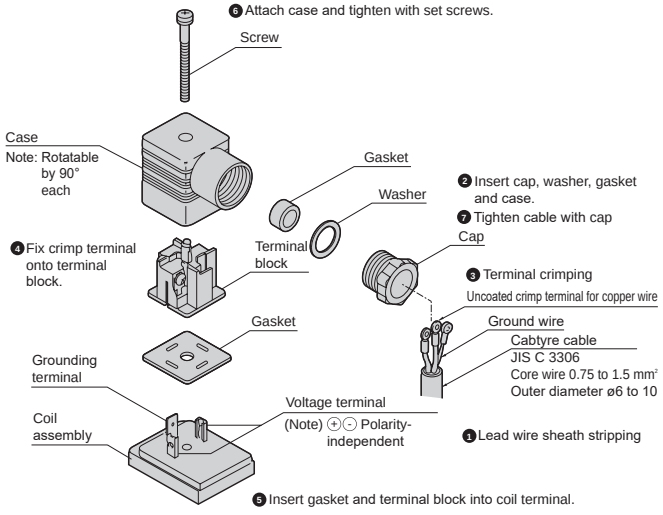

Wire with steps❶ to ❼.

* The orientation of the cord can be changed by removing the terminal block from the case, rotating it by 90°, and then replacing the block into the case.

4. Leakage

- Instantaneous leakage

With the pilot operated 2-port solenoid valve, if the pressure is suddenly applied when the pump starts while the valve is closed, the instantaneous valve may open causing fluid to leak. Caution is required during use.
(CXU30-ADK)

Fluid Control Components: Warnings and Cautions

Be sure to read this section before use.
Read safety precautions in “General Purpose Valves (catalog No. CB-03-1SA)” as well.

Product-specific cautions: Pilot operated 2-port solenoid valve for compressed air CXU10-EXA Series

Design/selection

1. Checking the specifications

⚠WARNING

■ Use the product in the range of conditions specified for the product.
Using this product with pressure or temperature outside the specifications range may result in damage or operation failure.
(Refer to specifications)
Contact CKD when using fluids other than compressed air.

■ Working fluids
Active gases cannot be used, so contact CKD when these applications are required.

■ If the product is used under conditions where the pressure differential between the primary side and secondary side while the valve is open is below 0.01 MPa, the diaphragm may vibrate, resulting in a short service life. When using under conditions where there is a chance that the differential pressure or flow rate can become very small as described below, it is recommended that the pilot air external exhaust be used. Contact CKD for details.
- When the primary or secondary side of solenoid valve has a needle valve
- When multiple solenoid valves connected in parallel piping are opened simultaneously (The drop in solenoid valve source pressure causes the pressure difference between the primary side and the secondary side to diminish.)

2. Safety design

⚠WARNING

■ Take measures to prevent physical harm or property damage in the event of failure of this product.

⚠CAUTION

■ Check for leakage current to avoid malfunction caused by leakage current from other fluid control components.

- When using a programmable controller, leakage current may affect the solenoid valve and cause malfunction. Note that the values that are affected by leakage current depend on the solenoid valve.

Programmable controller

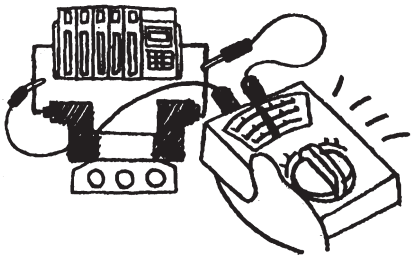

Using 100 VAC	2.0 mA or less
Using 24 VDC	1.8 mA or less

■ Observe the following precautions when using nylon tubes or urethane tubes for piping material.
- Use flame-resistant tubes where spatter could scatter.
- When using the standard push-in fitting on the spiral tube, fix the base of the tube with a hose clamp. Rotation may occur, causing a reduction in holding force.

3. Working environment

■ Use clean air.
- Do not use the compressed air if it contains chemicals, synthetic oils containing organic solvents, salt, or corrosive gas, as it can cause damage and/or operation failure.
- The ozone content in the compressed air should be 0.1 ppm or less. A higher ozone content may cause malfunction and leakage.

■ Protection characteristics (IPX5) of DIN terminal box connection
IPX5 (IEC60529 (IEC529:1989-11)) standards are applied to the test. Avoid use in conditions where water or coolant directly contacts the valve.

Explanation of IPX5 protection characteristic codes and test method

● Degree of protection

Note: IP-X5 is based on the following testing method.

■ IEC (International Electrotechnical Commission) standards (IEC60529 [IEC529:1989-11])

IP- □ □

Degree of protection (International Protection)

1st characteristic No. (degree of protection for foreign solid matter)

2nd characteristic No. (degree of protection for water entry)

Grade	Degree of protection		Overview of test method (fresh water is used)
5	Protection against water jets 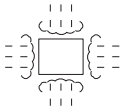	No harmful effects occur even when water is sprayed with nozzles from all directions.	In the following testing device, water is sprayed at the exterior of the test piece at a rate of 1 m^2 per minute from every direction for a total of three minutes or longer. 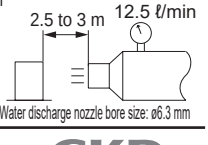

4. Durability

⚠WARNING

■ Using the solenoid valve with continuous energizing can cause a deterioration of performance. Contact CKD when using the solenoid valve under such conditions.

5. Pneumatic source

⚠CAUTION

■ Install a pneumatic filter just before the pneumatic component in the circuit.

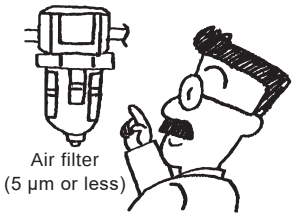

■ Do not supply anything other than compressed air.

■ Use clean compressed air that does not contain corrosive gases.

■ Use dry compressed air that does not cause moisture inside the piping.

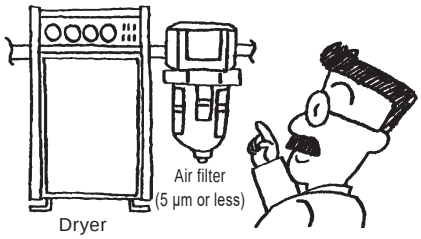

- Moisture will occur if the temperature drops in the pneumatic piping or pneumatic components.
- Operation faults could occur if moisture enters the air flow path of pneumatic components and temporarily blocks passage.
- Moisture could cause rust, making the pneumatic components fail.

■ Use compressed air that does not contain oil oxides, tar, carbon, etc., from the air compressor.

- If oil oxides, tar, or carbon enter the pneumatic components and solidify, resistance at the sliding section will increase, leading to operation failure.

■ Use compressed air that does not contain solid foreign matter.

- Any solid foreign matter in the compressed air can enter the pneumatic components and cause wear, locking, or internal leakage in the sliding parts.

6. Surge suppressor

⚠CAUTION

■ The surge suppressor enclosed within the solenoid valve is for protecting the output contact for that solenoid valve drive only. There is no significant protection for the other peripheral devices, and devices could be damaged or could malfunction due to a surge. As well, surges generated by other devices may be absorbed and cause damage such as burning. Note the following points.

- The surge suppressor functions to limit a voltage surge in the solenoid valve, which can reach several hundred volts, to a low voltage level that the output contact can withstand. Depending on the output circuit used, this may be insufficient and could result in damage or malfunction. Check whether the surge suppressor can be used within the surge voltage limit of the solenoid valve in use, the output device's withstand pressure and circuit structure, and by the degree of return delay time. When necessary, provide other surge countermeasures. CKD's solenoid valve with surge suppressor can counter inverse voltage surge which occurs when the valve is turned OFF to the level shown in the table below.

Specification voltage	Inverse voltage when OFF
24 VDC	Approx. 47V

- If the output unit is an NPN, a surge voltage equaling the voltage shown in the table above plus the power supply voltage may be applied to the output transistor.

[Output transistor protection circuit: Installation example 1]

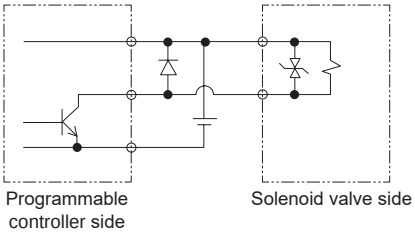

[Output transistor protection circuit: Installation example 2]

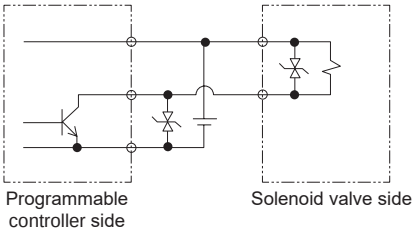

- If another device or solenoid valve is connected in parallel to the solenoid valve, the inverse voltage surge generated when the valve is OFF would apply to those devices. Even in the case of a solenoid valve with 24 VDC surge suppressor, a surge voltage may reach tens of volts for some models. This inverse voltage may cause damage or malfunction to other components connected in parallel. Avoid parallel connection of devices susceptible to inverse polarity voltages, e.g., LED indicators. When driving several solenoid valves in parallel, the surge from other solenoid valves may enter the surge suppressor of one solenoid valve, and it may burn depending on the current value. When driving several solenoid valves with surge suppressors in parallel, surge current could concentrate at the surge suppressor with the lowest limit voltage and cause similar burning. Due to the variations in surge suppressor limit voltage that exist even among solenoid valves of the same model No., in the worst case the surge suppressor may burn out. Avoid driving multiple solenoid valves in parallel.

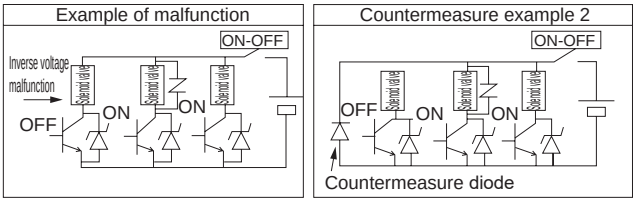

- The surge suppressor incorporated in the solenoid valve will often be short-circuited if it is damaged by an excessive voltage or current from the other solenoid valves. Where there is a failed surge suppressor, if a large current flows when the output is ON, in the worst case scenario, the output circuit or solenoid valve could be damaged or ignited. Do not continue energizing in a state of failure. Additionally, to prevent large currents from continuing to flow, connect an overcurrent protection circuit to the power supply and drive circuit, or use a power supply with overcurrent protection.

7. 100 VAC specifications

⚠CAUTION

■ The 100 VAC specification has an integrated full-wave rectifier circuit.

Depending on the type of SSR used to turn ON/OFF the solenoid valve, recovery failure of the valve may result.
Use caution when selecting SSRs. (Consulting the manufacturer of the relay or PLC is recommended.)

Mounting, installation and adjustment

1. Installation

⚠WARNING

■ After mounting, do not clean or paint with water or solvent.
● Otherwise some resin parts may be damaged.

■ Make sure that there is no torsion, tension or moment load applied to the fitting or the tube.

■ Check that tubing is not worn or damaged.
● Tubing could collapse, rupture, or become dislocated.

2. Pre-operation confirmation

⚠CAUTION

■ When supplying compressed air after connecting pipes, do not suddenly apply high pressure.
● The pipe connection could dislocate, causing the pipe tube to fly out, leading to accidents.

■ Before supplying compressed air after connecting pipes, check that there are no air leaks at any pipe connections.
● Use the product after applying a leakage detection agent on pipe connections with a brush, and checking for air leaks.

3. Piping

■ Connect piping so that connections are not dislocated by equipment movement, vibration, or tension.
● Cut the push-in fitting tube at right angles with a dedicated tool.
● Confirm that the tube has been inserted properly, and make sure that there is no tension during use. The tube could be dislocated or damaged if there is any tension.

■ Make sure that there is no torsion, tension or moment load applied to the fitting or the tube.

■ Use the designated tube.
● Particularly in the case of super-flexible urethane tubes, attach insert sleeves for use.

■ Securely insert the tube to the tube end, and make sure that the tube cannot be pulled off.

■ Cut the tube with a dedicated cutter and always at a right angle.

4. Lead wire connection

⚠CAUTION

■ Connect the lead wire appropriately.

The following lead wire should be used:

Electro connect code	Description	Conductor size	Conduct X-sect area	Outer ø of insulator	Outer ø of covering
Blank	Grommet lead wire	AWG#24	0.22 or equiv.	1.42	-

5. DIN terminal box

⚠WARNING

■ As there is a risk of electric shock when assembling or disassembling the terminal box, perform the assembly and/or disassembly after turning OFF the power supply.

⚠CAUTION

■ Disassembly
● Loosen screw (1) and pull cover (2) in the direction of screw (1) to remove the connector from coil assembly (12).
● Pull out screw (1) from cover (2).
● Notch (9) (next to the GDSN mark) can be found at the bottom of terminal block (3). Insert a compact flathead screwdriver in the gap between housing (2) and terminal block (3) and pry to remove terminal block (3) from cover (2) (Refer to Fig. 1). Remove the terminal block without applying excessive force. There is a risk of damage.
● Remove cable gland (4) and take out washer (5) and rubber packing (6).

Fig. 1

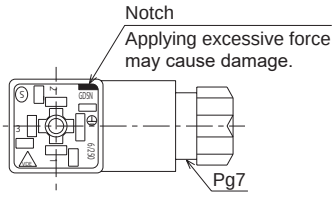

Exploded view

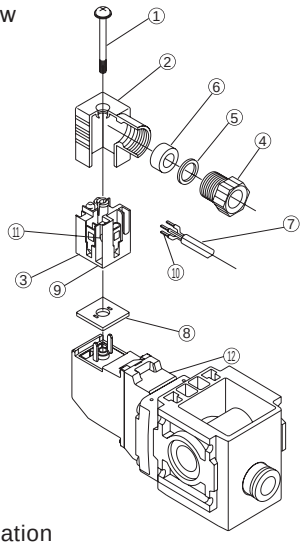

■ Wiring

● Wiring preparation

- The applicable dimensions for cable (7) are as the VCTF2(3) core (bore size: ø3.5 to 7) defined in JIS C3306.
- The length of the lead wire stripping of the cable is 10 mm.
- Both stranded wires and solid wires can be used for wiring.
- When using a stranded wire, avoid connecting a pre-soldered wire.
- When using a crimp sleeve (10) at the end of the twisted wire, select H0.5/6 (0.3 to 0.5 mm^2) or H0.75/6 (0.75 mm^2) made by Weidmüller Japan, or an equivalent product. Crimp sleeves are not included.

● Wiring

- Pass cable (7) through cable gland (4), washer (5) and rubber packing (6) in this order, and insert it into cover (2).
- Connect to terminals 1 and 2. There is no polarity.
- The recommended tightening torque is 0.2 to 0.25 N·m.

■ Assembly

● Set the wired terminal block (3) on cover (2). (Push in until it clicks.)
* The terminal block can be set in any of the four different directions (Fig. 2).

● Insert rubber packing (6) and washer (5) in this order into the cable through-hole in cover (2), and securely tighten cable gland (4).
Remarks: The recommended tightening torque for the cable gland is 1.0 to 1.5 N·m.
Pull the cable to check that it does not become loose.

● Place gasket (8) between the bottom part of terminal block (3) and the plug of coil assembly (12), insert the connector, insert screw (1) from over cover (2) and tighten it.
Remarks: The recommended tightening torque for screws is 0.2 to 0.25 N·m.

Fig. 2

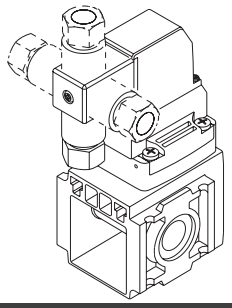

Use/maintenance

1. Common

⚠CAUTION

■ Continuous energizing for long periods may accelerate degradation of the solenoid valve. Furthermore, use caution under the following working conditions, as with continuous energization:

● When the energized time exceeds non-energized time in intermittent energizing

● When one energizing session exceeds 30 minutes in intermittent energizing

Consider heat dissipation when installing the product. Contact CKD when energizing this device continuously.

■ Instantaneous leakage
With the pilot operated 2-port valve, if the pressure is suddenly applied when the compressor starts while the valve is closed, the instantaneous valve may open causing fluid to leak. Caution is required during use.

■ Disassembly
Do not disassemble this valve.
Once disassembled, the valve may not retain its valve performance.

■ The coil and AC rectification stack generate heat while the valve is energized and immediately after energization. Do not touch these parts with your hands or other body parts.

■ Pressure differential
Under the following conditions, make sure to set the pressure so that the pressure differential while the valve is open does not drop below 0.01 MPa. If a pressure differential (between the primary side and secondary side) of at least 0.01 MPa cannot be secured while the valve is open, the diaphragm may vibrate, resulting in a short service life.

● When a needle valve is mounted on the secondary side

● When multiple solenoid valves connected in parallel piping (module and manifold connection) are opened simultaneously (The drop in source pressure causes the pressure difference between the primary side and the secondary side to diminish.)

● If sufficient pressure differential between the primary side and the secondary side cannot be secured while the valve is open, or if the pressure difference is unknown, the pilot air external exhaust is recommended. Contact CKD for details.

■ Note that the secondary side pressure is retained when the primary side pressure drops below the secondary side pressure while the solenoid valve is open. (While the solenoid valve is closed, fluid flows from the secondary side to the primary side.)

■ When installing the valve, make sure that no tension is applied to the coil lead wire.

■ When carrying the product, hold the body.
(Do not dangle the product from the lead wire when carrying it.)

■ When the regulator and solenoid valve are directly coupled, the parts could mutually vibrate, causing resonance and chattering.

■ If the piping cross-sectional area on the fluid inlet is reduced, the operation may become unstable due to differential pressure failure during valve operation. For the fluid supply side, use piping of a piping size that matches the port size of the valve.

■ Depending on the conditions of your usage, the operation of the solenoid valve may become unstable after being left unattended for an extended period of time. Always perform a test run before using the product for actual operations.

■ Avoid using the product for applications that involve continuous fitting rotation or oscillations. Fittings may become damaged.

Use/maintenance

2. CXU10-EXA standard product Internal exhaust specifications: Ensuring the min. working pressure differential

Relevant model No.: CXU10-$^{EXA}_{GEXA}$-[port size] -0 [coil option] -[voltage code]

This pilot operated solenoid valve opens and closes based on differential pressure before and after the solenoid valve. Hence, a pressure difference (ΔP = P1 - P2) of at least 0.01 MPa must be ensured for accurate operation of the valve. If pressure differential ΔP cannot be secured, the diaphragm may vibrate upon use, resulting in a short service life. Pressure difference ΔP is determined by the flow rate Q that flows through the solenoid valve. The larger the flow rate Q is, the greater the pressure difference ΔP will become. The guideline values for the "flow rate required" for ensuring a pressure difference ΔP of at least 0.01 MPa while the valve is open are as shown in the figure below.

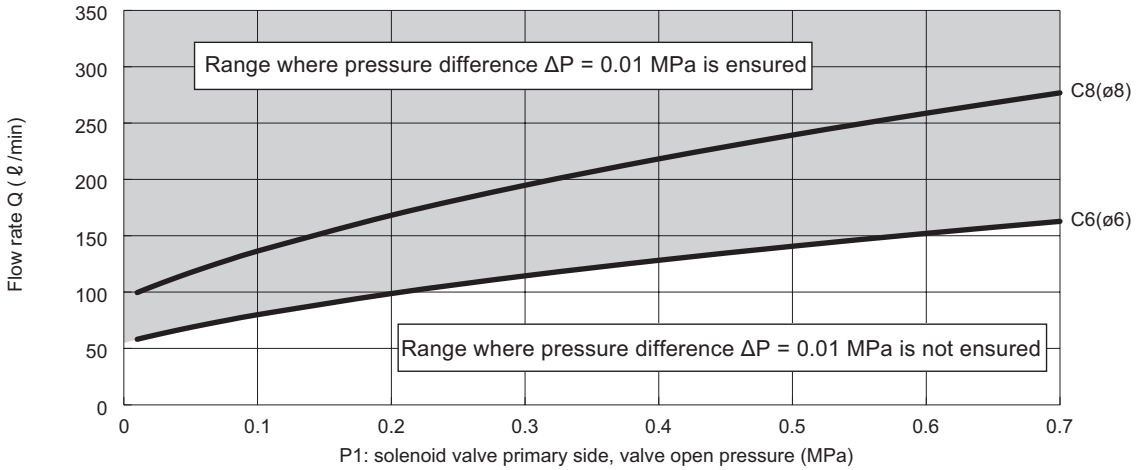

(1) When selecting a product, check the above figure to make sure that the necessary pressure difference ΔP is secured with the required flow rate.

(2) Note that, particularly in the following cases, the required pressure differential ΔP and flow rate may not be secured:
- When flow rate is reduced before/after the solenoid valve by using a needle valve, nozzle, or long piping
- When air supply on the primary side of the solenoid valve is low (insufficient regulator capacity, a throttling section, long piping, etc.)
- When air consumption of a component sharing the air supply source (regulator, etc.) on the primary side of the solenoid valve increases constantly or temporarily.
- When the flow rate changes/decreases due to the fluctuation of the source pressure of the air supply on the primary side of the solenoid valve
- When multiple solenoid valves are opened simultaneously

(3) When operating a manifold with multiple valves opened simultaneously, be sure to select components so that the following flow rate will be ensured.
Operation flow rate/solenoid valve × No. of valves opened simultaneously = Required operation flow rate < supply flow rate.

(Example) If P1= 0.3 MPa when 1 solenoid valve is open, the flow rate that can be ensured when the pressure difference ΔP=0.01 MPa is approximately 110 ℓ/min (operation flow rate). When 3 manifolds are opened simultaneously, 110 ℓ/min×3 manifold stations = 330 ℓ/min (operation flow rate) < the supply flow rate.

(4) If the required operation flow rate cannot be secured, or if the flow rate cannot be checked, consider the use of the pilot air external exhaust (custom-made product) or contact CKD.

3. Pilot air external exhaust specifications

■. With the custom-made product, a small amount of pilot air is released outside of the product when the valve opens based on solenoid valve operation. Before using the product, consider the impact of the externally exhausted fluid on the ambient environment. Fluid exhaust sounds are audible while the valve is operating. This is not a malfunction.

Pneumatic components

Safety Precautions

Be sure to read this section before use.
Refer to "Pneumatic Valves (No.CB-023SA)" for general precautions on valves.

Product-specific cautions: Pilot operated 5-port valve CXU30-4G2R Series / Shut-off 3-port solenoid valve CXU30-VE

Design/selection

1. Surge suppressor

⚠CAUTION

■ The surge suppressor enclosed within the solenoid valve is for protecting the output contact for that solenoid valve drive only. There is no significant protection for the other peripheral devices, and devices could be damaged or could malfunction due to a surge. As well, surges generated by other devices may be absorbed and cause damage such as burning. Note the following points.

● The surge suppressor functions to limit a voltage surge in the solenoid valve, which can reach several hundred volts, to a low voltage level that the output contact can withstand. Depending on the output circuit used, this may be insufficient and could result in damage or malfunction. Check whether the surge suppressor can be used within the surge voltage limit of the solenoid valve in use, the output device's withstand pressure and circuit structure, and by the degree of return delay time. When necessary, provide other surge countermeasures. CKD's solenoid valve with surge suppressor can counter inverse voltage surge which occurs when the valve is turned OFF to the level shown in the table below.

Specification voltage	Inverse voltage when OFF
24 VDC	Approx. 47 V

● If the output unit is an NPN, a surge voltage equaling the voltage shown in the table above plus the power supply voltage may be applied to the output transistor.

[Output transistor protection circuit: Installation example 1]

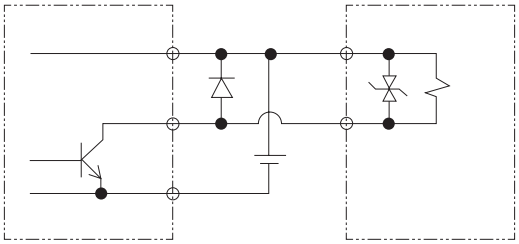

[Output transistor protection circuit: Installation example 2]

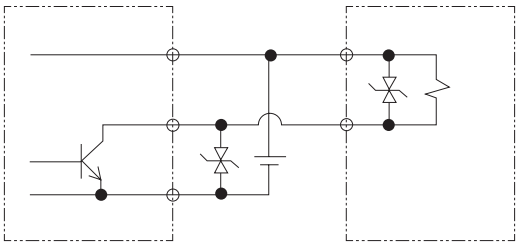

● If another device or solenoid valve is connected in parallel to the solenoid valve, the inverse voltage surge generated when the valve is OFF would apply to those devices. Even in the case of a solenoid valve with 24 VDC surge suppressor, a surge voltage may reach tens of volts for some models. This inverse voltage may cause damage or malfunction to other components connected in parallel. Avoid parallel connection of devices susceptible to inverse polarity voltages, e.g., LED indicators. When driving several solenoid valves in parallel, the surge from other solenoid valves may enter the surge suppressor of one solenoid valve, and it may burn depending on the current value. When driving several solenoid valves with surge suppressors in parallel, surge current could concentrate at the surge suppressor with the lowest limit voltage and cause similar burning. Due to the variations in surge suppressor limit voltage that exist even among solenoid valves of the same model No., in the worst case the surge suppressor may burn out. Avoid driving multiple solenoid valves in parallel.

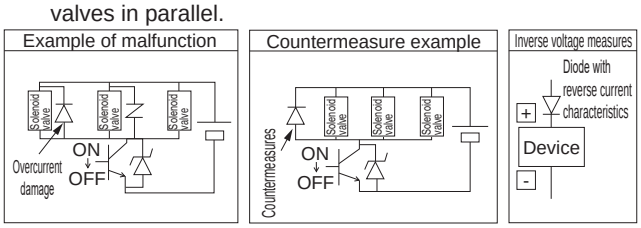

● The surge suppressor incorporated in the solenoid valve will often be short-circuited if it is damaged by an excessive voltage or current from the other solenoid valves. Where there is a failed surge suppressor, if a large current flows when the output is ON, in the worst case scenario, the output circuit or solenoid valve could be damaged or ignited. Do not continue energizing in a state of failure. Additionally, to prevent large currents from continuing to flow, connect an overcurrent protection circuit to the power supply and drive circuit, or use a power supply with overcurrent protection.

2. 100 VAC specifications

⚠CAUTION

■ The 100 VAC specification has an integrated full-wave rectifier circuit. Depending on the type of SSR used to turn ON/OFF the solenoid valve, recovery failure of the valve may result. Use caution when selecting SSRs. (Consulting the manufacturer of the relay or PLC is recommended.)

3. Exhaust check valve

⚠CAUTION

■ The exhaust check valve is a check valve. Note that when operating the cylinder rod directly without pressurization, the check valve opens and the cylinder rod does not move. (CXU30-4G2R)

- The solenoid valve for 2-position single, 2-position double and 3-position ABR connection mounted to CXU30-4G2R is provided with the "exhaust check valve" as standard.
- With components that are affected by a small amount of leakage or pressure of low sliding cylinders, etc., the functions may not operate properly.
- If you do not need the release check valve, contact CKD. Otherwise, choose a gasket "4G2R-GASKET" which is not equipped with a release check valve.

4. Pneumatic source

⚠CAUTION

■ Install a pneumatic filter just before the pneumatic component in the circuit.

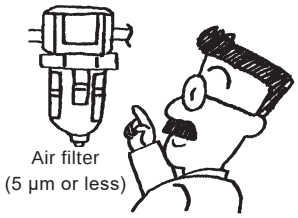

■ Do not supply anything other than compressed air.

■ Use clean compressed air that does not contain corrosive gases.

■ Use dry compressed air that does not cause moisture inside the piping.

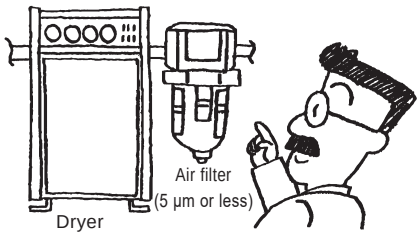

- Moisture will occur if the temperature drops in the pneumatic piping or pneumatic components.
- Operation faults could occur if moisture enters the air flow path of pneumatic components and temporarily blocks passage.
- Moisture could cause rust, making the pneumatic components fail.

■ Use compressed air that does not contain oil oxides, tar, carbon, etc., from the air compressor.

- If oil oxides, tar, or carbon enter the pneumatic components and solidify, resistance at the sliding section will increase, leading to operation failure.

■ Use compressed air that does not contain solid foreign matter.

- Any solid foreign matter in the compressed air can enter the pneumatic components and cause wear, locking, or internal leakage in the sliding parts.

5. How to use

⚠WARNING

■ The 3(R) port is a dedicated exhaust port. Do not apply any pressure or use in a way that causes negative pressure to form here.

⚠CAUTION

■ Do not use the product with the air supply port (P-port) throttled or released to the atmospheric pressure.

- The supply pressure may drop out of the operating range resulting in malfunction.

Mounting, installation and adjustment

1. Lead wire connection

⚠ CAUTION

■ Lead wire standards differ depending on the type of electrical connections. Connect wires according to the lead wire to be used.

Electro connect code	Description	Conductor size	Conduct X-sect area	Outer ø of insulator
E□	E-connector (with lead wire)	AWG#26	0.13 or equiv.	1.3

For electrical connections, check that tension by lead wires is not applied to the solenoid valve coil.

2. How to use E-connector

⚠ CAUTION

■ The E-connector has top and side connectors to which sockets can be connected. The socket assembly is enclosed with shipment. Select the connection direction based on the installation environment.

■ How to mount and remove socket

- When mounting the socket, hold the lever and socket with fingers and insert straight into the square window on the connector body. Align the lever finger with the groove on the connector body and lock it. When mounting from the top, position the socket so that the lever faces the front. When mounting from the side, position the socket so that the lever is in an upward direction.
- When pulling out the socket, press down the lever to release its finger from the groove, then pull straight out.

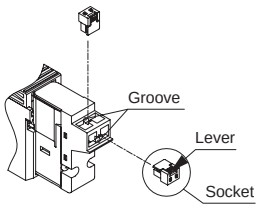

■ How to connect lead wire

- Strip the end of the lead wire by about 3 mm. Align the end of core wires, insert them into the contact terminal, and crimp with a crimp tool. When crimping, check that both the sheath and core wires are held, and 0 to 0.5 mm of the core wire end is visible.
- After crimping, position the contact terminal as shown below, and insert into the square window on the socket. The terminal locks when it is inserted to the end. After inserting, pull the terminal lightly to check that it is locked.

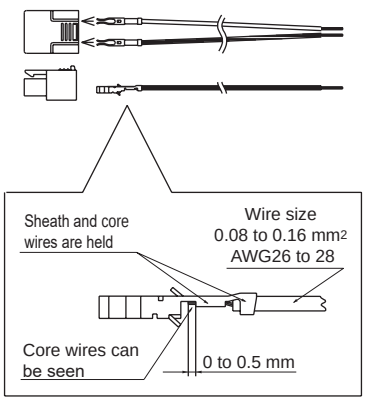

3. DIN terminal box

⚠ WARNING

■ As there is a risk of electric shock when assembling or disassembling the terminal box, perform the assembly and/or disassembly after turning OFF the power supply.

⚠ CAUTION

■ Disassembly

- Loosen screw (1) and pull cover (2) in the direction of screw (1) to remove the connector from coil assembly (12).
- Pull out screw (1) from cover (2).
- Notch (9) (next to the GDSN mark) can be found at the bottom of terminal block (3). Insert a compact flathead screwdriver in the gap between housing (2) and terminal block (3) and pry to remove terminal block (3) from cover (2) (Refer to Fig. 1). Remove the terminal block without applying excessive force. There is a risk of damage.
- Remove cable gland (4) and take out washer (5) and rubber packing (6).

Fig. 1

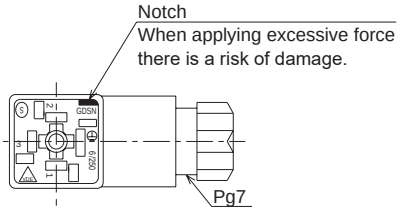

Exploded view

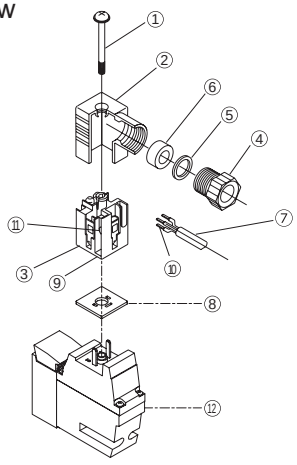

■ Wiring

- Wiring preparation
  - · The applicable dimensions for cable (7) are the VCTF2(3) core (ø3.5 to 7) defined in JIS C3306.
  - · The length of the lead wire stripping of the cable is 10 mm.
  - · Both stranded wires and solid wires can be used for wiring.
  - · When using a stranded wire, avoid connecting a pre-soldered wire.
  - · When using a crimp sleeve (10) at the end of the twisted wire, select H0.5/6 (0.3 to 0.5 mm^2) or H0.75/6 (0.75 mm^2) made by Weidmüller Japan, or an equivalent product. Crimp sleeves are not included.
- Wiring
  - · Pass cable (7) through cable gland (4), washer (5) and rubber packing (6) in this order, and insert it into cover (2).
  - · Connect to terminals 1 and 2. There is no polarity.
  - · The recommended tightening torque is 0.2 to 0.25 N·m.

Mounting, installation and adjustment

■ Assembly

● Set the wired terminal block (3) on cover (2). (Push in until it clicks.)
* The terminal block can be set in any of the four different directions (Fig. 2).

● Insert rubber packing (6) and washer (5) in this order into the cable through-hole in cover (2), and securely tighten cable gland (4).

Remarks: The recommended tightening torque for the cable gland is 1.0 to 1.5 N·m.
Pull the cable to check that it does not become loose.

● Place gasket (8) between the bottom part of terminal block (3) and the plug of coil assembly (12), insert the connector, insert screw (1) from over cover (2) and tighten it.

Remarks: The recommended tightening torque for screws is 0.4 to 0.45 N·m.

Fig. 2

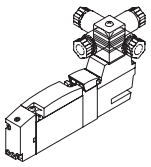

4. Installation

■ Make sure that there is no torsion, tension or moment load applied to the fitting or the tube.

Use/maintenance

1. CXU30-4G2R Series

⚠CAUTION

■ Continuous energizing for long periods may accelerate degradation of the solenoid valve. Furthermore, use caution under the following working conditions, as with continuous energization:
· When energized time exceeds non-energized time in intermittent energizing
· When one energizing session exceeds 30 minutes in intermittent energizing
Consider heat dissipation when installing the product.

■ When using the AC voltage type in a continuously energized state, the temperature of the coil's outer surface will be high. It may cause burns. Do not touch it when it is energized.

2. CXU30-VE Series

⚠CAUTION

■ This valve is specifically designed to start and stop a device. This valve should not be used for cylinder repeat operation or as a normal 3-way valve.

■ Provide heat removal measures when you use the products with continuous current application for an extended period of time.

3. Manual override

⚠WARNING

■ CXU30-4G2R and CXU30-VE Series are internal pilot operated solenoid valves. If air is not supplied to the P-port, the main valve will not be switched even if the manual override is operated.

■ A manual protection cover is provided as standard. The protective cover is closed when shipped. Therefore, the manual override device cannot be seen when delivered. Open the protective cover to operate the manual override. Note that the protective cover will not close unless the locking manual override is released.

■ The manual override is used for both non-locking and locking. Holding down and turning the button locks the valve. For locking, be sure to press down and turn. If manual override is turned without being pressed down, it could be damaged or air could leak.

■ How to open and close manual protection cover
Do not excessively force the manual protective cover when opening and closing it. Excessive external force could cause failures. (Below 5 N)

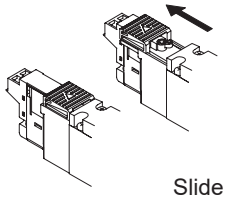

Slide type

DIN terminal box

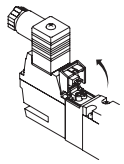

Rotation

■ How to operate manual override

● Push & non-locking operation
Push in the direction of the arrow until it stops.
Release to cancel.

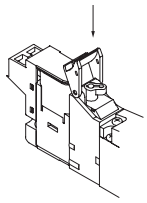

● Push & locking operation
Push manual override and turn 90° in the direction of the arrow.
The function is not canceled even when the button is released.

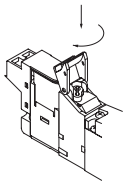

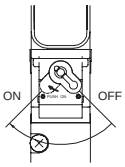

■ When conducting manual operation, make sure that there are no people near the operating cylinder.

4. How to replace coil

⚠WARNING

■ E-connector coil assembly
Replace the coil by removing the set screws shown below. Loosening other screws could cause operation failures. When installing, check that the gasket is installed on the coil side and tightening torque is proper. Improper installation could result in air leakage or operation failures.

■ DIN terminal box coil assembly

Replace the coil assembly by removing the set screws shown below. Loosening other screws could cause operation failures. When installing, check that the gasket is installed on the coil assembly side and tightening torque is proper. Improper installation could result in air leakage or operation failures.
The coil assembly of E-connector specifications and DIN terminal box specifications cannot be replaced.

Recommended tightening torque 0.15 to 0.19 N·m

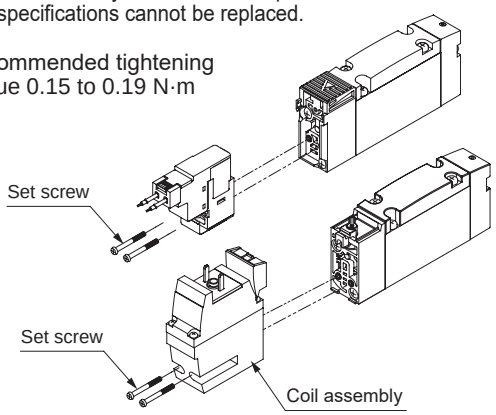

5. Usage method

⚠CAUTION

■ Connect a silencer or exhaust filter, etc., on the exhaust port for safety and noise reduction.

6. Pressure switch

⚠CAUTION

■ Setting pressure

● Pressure displayed on the scale plate is used as a guideline. When setting pressure, refer to the separate pressure gauge.

● Pressure displayed on the scale plate is the value when the contact is OFF.

To set the value when the contact is ON, set the pressure displayed on the scale plate to a value smaller than that from which hysteresis has been subtracted. If not set, operation may not take place at the set value (see the figure below). (Hysteresis refers to the pressure range from when the switch is turned on to the set pressure until the pressure drops and the switch turns OFF.)

Operation chart

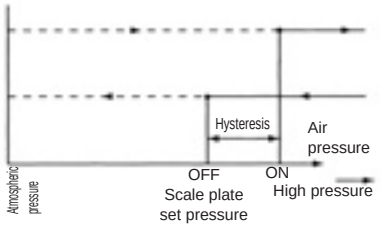

■ Installation:

● Do not drop or bump the product when handling it.

● Wire such that repeated bending or tension are not applied to the lead wires. Failure to do so could lead to disconnection.

● Do not use the product near a strong magnetic field or large current (large magnet or spot welding machine, etc.). This may cause malfunction.

● To ensure the degree of protection equivalent to IP65 of the pressure switch, connect the M3 fitting which comes with the product and extend the tube so that water will not go inside. Tightening torque of M3 fitting is 0.3 to 0.6 N·m. Do not plug the atmospheric pressure inlet port. Plugging could cause malfunctions to occur. Not for outdoor use.

● Do not pressurize the atmospheric pressure inlet port or blow it with compressed air. Product performance could decrease or the product could be damaged.

■ Wiring

● Connecting the lead wire

(1) Do not connect the lead directly to the power supply. Connect the load serially. Failure to do so may result in burning out the lamp or melting the contact.

(2) When used for DC, connect the brown wire to the + side and the blue wire to the - side. The lamp will not come on if wires are connected in reverse.

(3) When connected to the AC relay or PC input, the switch lamp may not come on if the circuit is half-wave rectified. In this case, the lamp comes on if the switch lead wire polarity is reversed.

● Contact capacity

Do not exceed the specified load voltage or load current range. Failure to do so may result in burning out the lamp or melting the contact. The lamp may not come on if the current is less than the rated current.

● Contact protection

(1) When you use the product with a conductive load such as a relay, provide a contact protection circuit as shown below. The contact could melt if this protection circuit is not provided.

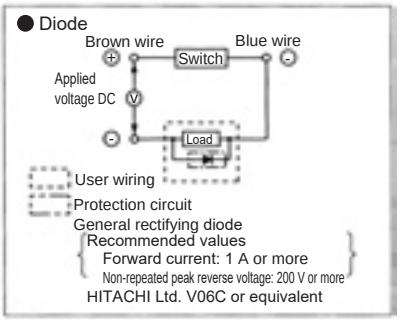

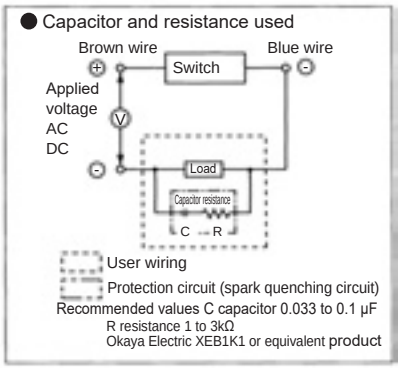

(2) If DC wiring exceeds 50 m or AC wiring exceeds 10 m, the wiring capacity will be reached, and a rush current will occur, damaging the switch or shortening the service life. Install a contact protection circuit if the wiring length is exceeded.

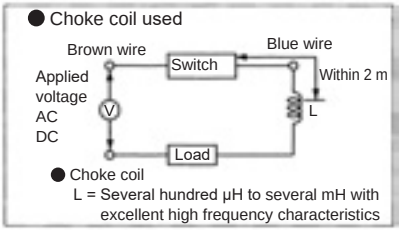

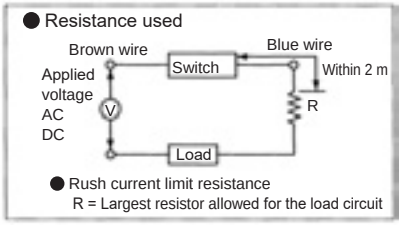

Safety Precautions

Be sure to read this section before use.
Refer to Intro Page 63 for precautions for general pneumatic components.

Product-specific cautions: Pneumatic components (F.R.L. unit (modular design))

Design/selection

1. Common

WARNING

■ This product is designed for industrial use. Do not use for medical purposes, or in any equipment or circuit that concerns human life.

■ The air filter, lubricator plastic bowl, lubricator drip window and pressure gauge lens are all made of polycarbonates. Cannot be used in environments containing synthetic oil, organic solvents, chemicals, coolant, screw locking agent, leak detection solutions, or hot water, etc., or where these substances may come in contact with the product. Refer to page 1067 for details on plastic bowl chemical resistance.

■ Piping load torque
Make sure that no piping load or torque is applied to the body or pipes.

Series	1000	2000	3000	4000	6000	8000
Max. torque N·m	10	10	50	50	100	100

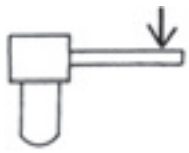

With the 1000 Series in particular, application of a torque of 20 N·m or more on the piping is "hazardous" as the piping could be damaged. Use the product within the specified torque, even when using the pipe adaptor.

CAUTION

■ High moisture levels
Install the air dryer and drain separator before the air filter. If there is a lot of moisture from the compressor, hot and highly humid air could shorten the device's life or result in corrosion.

■ Dry air
Rubber parts for the regulator could deteriorate quickly, so use of a fluoro rubber valve assembly is recommended. Contact CKD when required.

■ Water-lubricated compressor circuit
Take measures to prevent chlorine-based substances from entering the compressed air.

■ Use the auto-drain under the working conditions below. Failure to observe this could result in operation faults.
NO auto-drain (exhaust when not pressurized): For "F"
- Use a compressor with a capacity of 0.75 kW (90 ℓ/min. [ANR]) or more.
- Set the working pressure to 0.1 MPa or more. (Air is purged with initial drainage until pressure reaches 0.1 MPa.)

NC auto-drain (no exhaust when not pressurized) For "F1"
- A compressor with a capacity of 0.75 kw or less can also be used.
- Set the working pressure to 0.15 MPa or more.

For 1000 Series NC auto-drain
- Set the working flow rate to less than or equal to the max. processing flow rate.
- Avoid use of this in places with high vibration, such as where a compressor is installed, because air could leak from the drain outlet when the float vibrates.
- Avoid drain overflow. It will cause operation faults.

2. Regulator, filter/regulator

⚠WARNING

■ Output pressure exceeding the regulator's set pressure could result in damage or faulty operation of the secondary side devices. Be sure to install a safety device.

■ The regulator cannot process residual pressure (release secondary pressure) when the primary pressure is released.
Use a regulator with a check valve when residual pressure must be processed.

■ The regulator may not be usable with a secondary side sealed circuit or balance circuit.

⚠CAUTION

■ Pulsation may occur depending on the working and piping conditions. Lower the primary pressure if pulsation occurs.

■ The setting range for the regulator's secondary side pressure should be within 85% of that of the primary side. Otherwise, the pressure drop may increase.

■ When using regulators in parallel as below, do not use the OUT side as a closed circuit. If a closed circuit is required, install a check valve on the OUT side of each regulator.

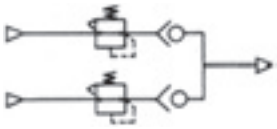

3. Lubricator

⚠WARNING

■ Lubricator
Do not use lubrication with an air motor or bearings. Lubrication may not be possible when used very frequently, such as in a press machine.

⚠CAUTION

■ If the working air quantity is low for the lubricator, oil may not drip. Check the min. air quantity required for dripping oil.

4. Drain separator

⚠CAUTION

■ The auto-drain may not operate correctly if a large amount of drain enters. If there is a large amount of drain, select the bowl option "M" and perform regular drainage using a solenoid valve or the like from the drain pipe.

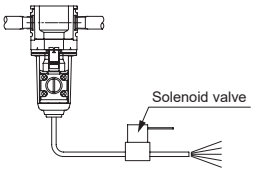

5. Pressure switch

⚠CAUTION

■ When using the digital pressure sensor PPX or compact pressure switch PPD, avoid using it as a set with the lubricator. The switch is not a drip-proof structure, so operation could be disabled if the lubrication oil comes in contact with it.

6. Residual pressure exhaust valve

⚠WARNING

■ Precautions for the residual pressure exhaust valve
- The EXH port is dedicated for installation of the silencer. Tighten with a torque of 3 N·m or less (manual tightening). Do not connect pipes where their loads or torque, etc., may be applied to the EXH port.
- If exhaust operations are incomplete due to air quality, manually discharge air by operating the knob (turn and raise).

7. Module check valve

■ This valve cannot be used as a stop valve that requires no leakage. Slight leakage is allowed for in this product's specifications.

Mounting, installation and adjustment

1. Common

⚠ CAUTION

■ Avoid installing this product where it is subject to direct ultraviolet.

■ Flush and clean the pipes.

Dirt or foreign matter remaining in the piping will deteriorate product performance.

■ Make sure that no foreign matter enters the pipes when connecting the pipes and fittings.

When screwing in piping or fittings, check that swarf from port threads or sealant does not get inside. Dirt or foreign matter remaining in the piping will deteriorate product performance.

■ Using the F.R.L. correctly

1. Set the regulator pressure setting upward. After setting the pressure, lock the handle. Check primary pressure carefully before setting pressure.
2. Confirm the direction of the arrow indicating the air inlet before connecting. A reverse connection could result in improper operation.
3. Install the air filter and the lubricator case downward vertically. Drainage may be defective or drip check may become impossible.
4. Use of the auto-drain where vibration is present could cause faults and malfunctions.

■ Drain piping of the auto-drain should be piped under the following conditions. Otherwise, malfunctions may result.

Use an inner diameter of ø5.7 or more and piping of 5 m or less for the drainage section. Do not use vertical piping.
Do not route it vertically. Pipe so that no lateral load is applied on the bowl.
When you tighten a fitting into an Rc1/4 female thread, hold the hexagon part of the cock.

■ Piping screw-in torque

Make sure that excessive torque is not applied on the body and piping when piping.

Series	1000	2000	3000	4000	6000	8000
Max. torque N·m	15	30	30	30	70	70

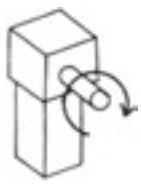

■ Drain piping

● The drain piping for the plastic bowl has a barbed nipple, and can be directly installed. However, confirm that the drain cock is closed before inserting the tube. Do not route it vertically. Pipe so that no lateral load is applied on the bowl. Do not fix the tube connected to the drain outlet with a lateral load applied. If drainage is performed with a lateral load applied, external leakage may occur. Contact CKD when attaching a separate valve to the tube tip that is inserted to the drain outlet to control drainage.

■ Tightening torque of drain cock

● The maximum tightening torque of the drain cock of the plastic bowl is as follows.

· 1000 Series: 0.1 N·m
· Others: 0.5 N·m

■ Drain piping of metal bowl with auto-drain

· When you tighten a fitting into the drain outlet female thread, hold the hexagon part of the cock. If tightened without fixing the hexagonal face, it may result in breakage. When using the metal bowl with auto-drain, if the drain is piped with a tightening fittng, manual operation is not possible.

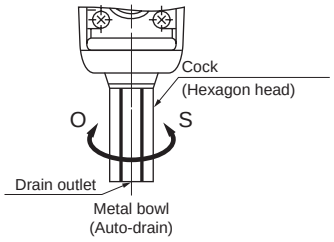

■ Piping the unit with pressure detection port

F6000-□-W-Q/M6000-□-W-Q
MX6000-□-W-Q/F8000-□-W-Q
For M8000-□-W-Q/MX8000-□-W-Q

A pressure detection port is available as an option for F6000-W, M6000-W, MX6000-W, F8000-W, M8000-W and MX8000-W.
The life of the filter element or oil mist filter mantle assembly is visually checked by assembling the differential pressure gauge GA400-8-P02 into the pressure detection port.
When selecting option Q and X1 simultaneously for F6000-W and M6000-W and mounting differential pressure gauge GA400, raise the gauge with piping material so that it does not interfere.

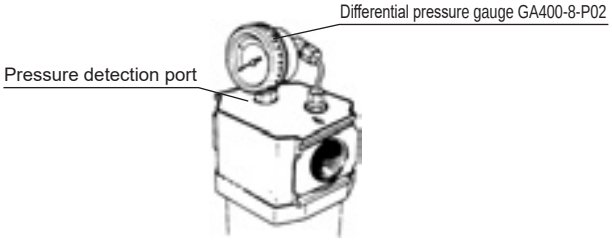

Check the port position of the differential pressure gauge, the high pressure side and low pressure side, and mount properly.

2. Regulator, filter/regulator

⚠CAUTION

■ Regulator, filter/regulator

- Lightly tighten (0.6 N·m or less) mounting screws for embedded pressure gauge G401-OP, G401 and gauge plug.
- When installing the pressure gauge with a safety mark on the gauge plug, or when installing a general screw-in pressure gauge, tighten with a torque of 10 to 15 N·m or less.
- Do not move or swing the product by the adjustment knob on the regulator.
- Check that pressure exceeding the pressure gauge's full scale is not applied. The pressure gauge could be damaged. (Pay special attention when using the full scale 0.2 or 0.4 MPa pressure gauge.)

3. Lubricator

⚠CAUTION

■ Adjustment of the lubricator oil drip

- Adjust the oil rate by turning the adjusting dome with bare hands. For closing, tighten with a torque of 0.5 N·m or less. The numbers (scale) on the dial are a guide used after adjustment, and do not indicate the oil drip rate.

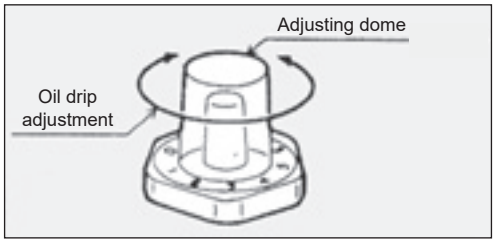

4. Drain separator

⚠CAUTION

■ Using the drain separator correctly

1. Confirm the direction of the arrow indicating the air flow direction before connecting, and make sure that the flow direction is correct when piping. If the flow direction is incorrect, the drain cannot be isolated. (It will cause the drain to flow out from the secondary side.)
2. Install the case downward and vertically. Otherwise, drain discharge failure could result.
3. Use of the auto-drain where vibration is present could cause faults and malfunctions.

5. Pressure switch

⚠CAUTION

■ Mounting of pressure switch (PPR)

- Insert the O-ring into the adaptor
  * Insert the O-ring into the 2 O-ring grooves
    Handle the O-rings with clean hands
- Mount the adaptor onto the body
  Mount the adaptor with the included 2 bolts (M3)
  * Be careful of the mounting location and direction so that the O-ring will not fall off.
  * Do not screw in one of the bolts completely, but to screw in both bolts as evenly as possible. (Tightening torque 0.5±0.1N·m)

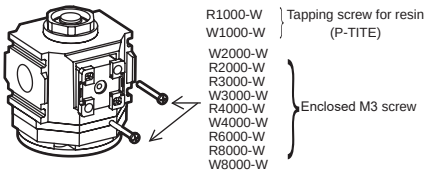

- Mount the main unit, and then attach the included pin on the face on the adaptor side.

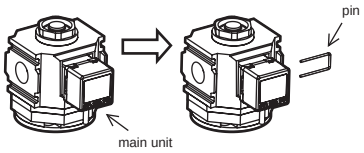

Note) Insert the pin all the way to the end. Also, confirm that the pin has been attached before pressurization.

6. Pressure gauge

⚠CAUTION

■ Pressure gauge

Repeated and sudden increase and decrease in pressure and pressure pulsation must be avoided because it could adversely affect the life of the pressure gauge. Either ease the pressure fluctuation in the circuit or contact CKD so that a pressure gauge with a cushioning screw can be prepared. Pressure exceeding the pressure range may damage the gauge.

Use/maintenance

1. Common

⚠ WARNING

- Perform a periodic inspection once every six months or less to check for any cracks, scratches and other damages of the air filter and plastic bowl of the lubricator.
  Replace the bowl with a new plastic or metal one if you find any damage.

- Check the air filter, lubricator plastic bowl and lubricator drip window periodically for contamination.
  - If parts are heavily contaminated or if transparency has decreased, replace with a new bowl and drip window.
  - Use water and household detergent to wash parts. Rinse them out well with clean water afterward.

- Removing bowl of filter and lubricator
  Stop the compressed air supply. Release the pressure in the bowls completely and make sure that there is no residual pressure before removing the bowls.

⚠ CAUTION

- Check the oil drip rate once a day.
  If the oil drip is faulty, problems could occur in the unit being lubricated.

- Do not use a distributor to separate the air with oil mist and the air without oil mist. Oil in the lubricator may flow backward.

- As a clogged filter element may cause degradation of performance, perform periodical inspection and replacement of the element.

- Do not disassemble or modify the product.

- Read instructions and precautions enclosed with the product before use or maintenance.

Drainage method

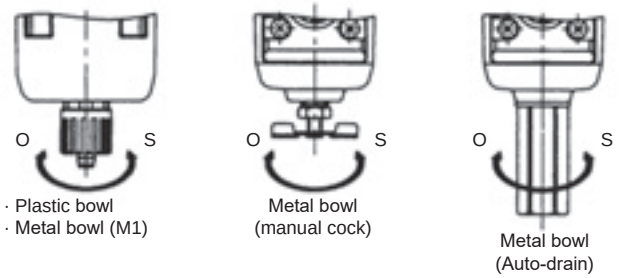

· Plastic bowl
· Metal bowl (M1)

Metal bowl
(manual cock)

Metal bowl
(Auto-drain)

- Drainage starts when the cock is turned in the O direction, and the discharge stops when the cock is turned in the S direction. Tighten by hand in the S direction.
- When auto-drain is available, drainage is discharged automatically when it accumulates. Drainage can also be discharged manually.

Removing the resin bowl

2000, 3000, 4000, 6000, 8000 Series

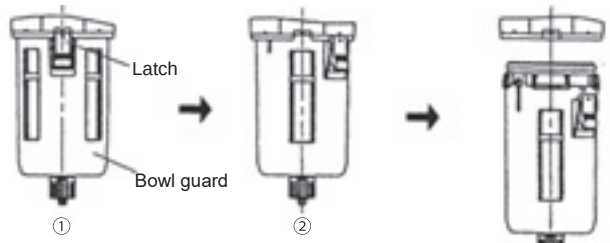

1000 Series

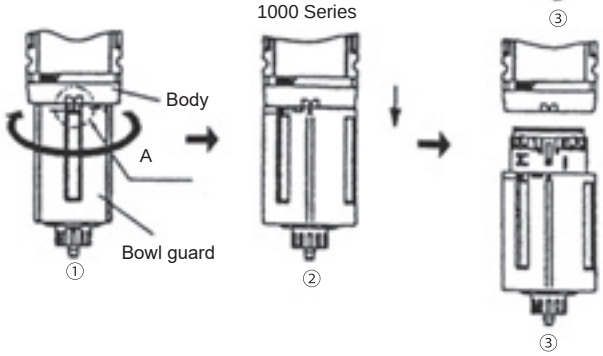

Removing the metal bowl

2000, 3000, 4000, 6000, 8000 Series

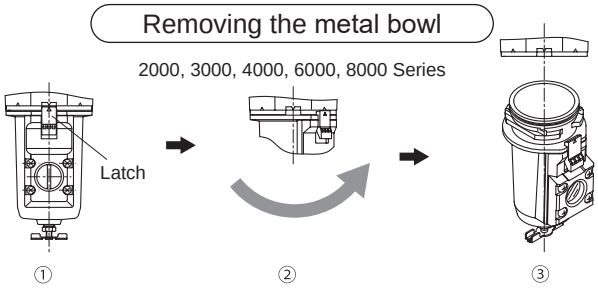

2. Filter/regulator

⚠ CAUTION

- Elements of W1000 to W8000
  Inspect the valve assembly when it is removed during maintenance.
  Do not lose springs, etc., during maintenance.

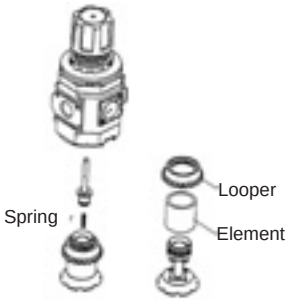

3. Filter

⚠ WARNING

- Drain so that air filter moisture does not accumulate beyond the upper limit.
  Components could malfunction if moisture flows into the secondary side.

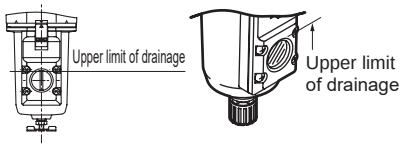

Metal bowl　　Metal bowl

- The resin bowl must not be filled above the “upper drain limit” or “MAX LEVEL” stamped on the bowl guard.

⚠CAUTION

■Submicron 0.3 μm element
This filter cannot be flushed with air, water, etc., and be reused. When the pressure drops to 0.07 MPa, replace the element with a new one. (excluding 1000 and 2000 Series)

■ Oil mist filter
The mantle (element) life ends after one year (6000 hours) or when pressure drops to 0.1 MPa. (Excluding the X type) Replace the mantle with a new one at the end of its life. (Do not touch the urethane foam layer when replacing the mantle.)

■If a differential pressure indicator is provided, replace the mantle (element) before the differential pressure indicator's color changes completely to red.

4. Regulator, filter/regulator

⚠CAUTION

■Pull the pressure adjustment knob and release the lock before setting the regulator pressure. The regulator could be damaged if the pressure is set without unlocking it.

■The set pressure changes from the initial set point based on working environment and conditions, as well as aging of part materials. Check the pressure regularly, and reset if conditions have changed.

■When the regulator is left with the primary pressure released for long periods, return the set pressure to 0. External leakage may occur due to valve sticking.

5. Lubricator

⚠WARNING

■Use Class 1 turbine oil (no additives) ISO VG32 for the lubricator. Other oils could cause breakage or improper operation. ■Removing filling plug of lubricator

To prevent the filling plug from popping out, loosen the filling plug by one turn, and then completely depressurize the bowl before removing the filling plug. Wipe away any dirt around the filling plug that could scatter.

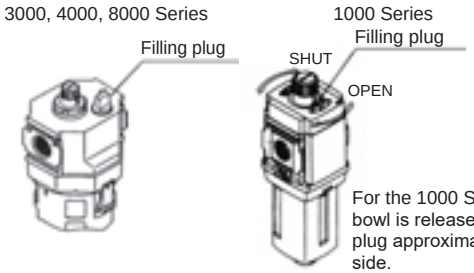

For the 1000 Series, pressure in the bowl is released by sliding the filling plug approximately 45˚ to the OPEN side.

- Close the filling plug after lubricating.
- Never remove the bowl without removing the filling plug (while the bowl is pressurized). (L3000 to L8000)
- With 1000 Series, never remove the bowl with the filling plug at the SHUT side (while the bowl is pressurized). (L1000)

⚠CAUTION

■Periodically replenish oil in the lubricator bowl so that it does not drop below the lower limit.

■When lubricating the L1000, pressure in the bowl is released by turning the filling plug. Refer to the section above for details on using the filling plug. (Lubrication is done while pipes are pressurized.) Check that there is no pressure in the bowl, remove the bowl and bowl guard, and then directly lubricate to the bowl. Refer to the previous page for details on removing the bowl.

■When lubricating the L3000 to L8000, loosen the filling plug slightly to release pressure in the bowl, then remove the filling plug. Refer to the section above for details on using the filling plug. (Removing the filling plug enables lubrication to be done while pipes are pressurized.) Relubrication can also be done through the filling plug hole. You can also refill the bowl directly by removing the bowl and the bowl guard. Refer to the previous page for details on removing the bowl.

6.Drain separator

⚠CAUTION

■Drain piping
- The drain piping for the plastic bowl has a barbed nipple, and can be directly installed. However, confirm that the drain cock is closed before inserting the tube. Do not route it vertically. Pipe so that no lateral load is applied on the bowl. Do not fix the tube connected to the drain outlet with a lateral load applied. If drainage is performed with a lateral load applied, external leakage may occur. Contact CKD when attaching a separate valve to the tube tip that is inserted to the drain outlet to control drainage.

■Tightening torque of drain cock
- The maximum tightening torque of the drain cock of the plastic bowl is 0.5 N·m.

■Drain piping of metal bowl with auto-drain
- Fix the cock's hexagonal face before screwing the fitting etc., into the drain outlet's female threads. When using the metal bowl with auto-drain, if the drain is piped with a tightening fitting, manual operation is not possible.

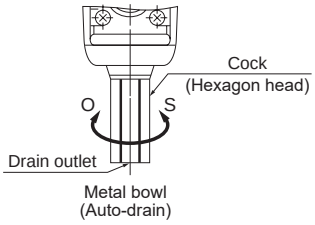

Product-specific cautions: F.R.L. components

Chemical resistance of plastic

⚠ WARNING

- The chemical resistance of plastic parts is shown below.
- Avoid using products in an atmosphere where chemicals are contained in compressed air or atmosphere, or where they could adhere to parts.
- Use in the above state could lead to bowl damage and accidents.
- Avoid using with these types of chemicals or in an atmosphere containing these chemicals.
- A metal bowl is available if these chemicals must be used.

Chemical resistance of plastic bowl/body

Use a metal bowl in an atmosphere containing the following chemicals.
Check whether the testing solutions, sealants and adhesives contain the following chemicals.

Types of chemicals	Categories of chemicals	Main products of chemicals	General applications	Polycarbonate bowl	Nylon bowl	Nylon body
Inorganic chemicals	Acids	Hydrochloric acid, sulfuric acid, hydrofluoric acid, phosphoric acid, chromic acid, etc.	Acid washing of metals, acidic degreasing solution, coating treatment solution, etc.	×	×	×
	Alkalines	Alkalis such as caustic soda, caustic potash, calcium hydroxide, aqueous ammonia, sodium carbonate	Alkaline degreasing solution for metals Soluble coolant, leakage detection agent	×	○	○
	Inorganic salts	Sodium sulfide, sodium nitrate, potassium bichromate, sulfate of soda, etc.		×	○	○
Organic chemicals	Aromatic hydrocarbons	Benzene, toluene, xylene, ethyl benzene, styrene, etc.	Contained in paint thinner (benzene, toluene and xylene)	×	×	×
	Chlorinated aliphatic hydrocarbons	Methyl chloride, ethylene chloride, methylene chloride, acetylene chloride, chloroform, trichlene, perchlene, carbon tetrachloride	Organic solvent-based washing solution for metals (trichlene, perchlene, carbon tetrachloride, etc.)	×	○	○
	Chlorinated aromatic hydrocarbons	Chlorobenzene, dichlorobenzene, benzene hexachloride (B/H/C), etc.	Agricultural chemicals	×	○	○
	Petroleum components	Solvent naphtha, gasoline, kerosene		×	○	○
	Alcohols	Methyl alcohol, ethyl alcohol, cyclohexanol, benzyl alcohol	Used as antifreezing agent Leakage detection agent	×	×	×
	Phenol	Carbolic acid, cresol, naphthol, etc.	Disinfectant solution	×	×	×
	Ethers	Methyl ether, methyl ethyl ether, ethyl ether	Additive of brake oil	×	○	○
	Ketones	Acetone, methyl ethyl ketone, cyclohexanone, acetophenone, etc.		×	×	×
	Carboxylic acids	Formic acid, acetic acid, butyl acid, acrylic acid, oxalic acid, phthalic acid, etc.	Dyes/oxalic acid for aluminum processing, phthalic acid for paint base and leakage detection agents	×	×	×
	Esters	Dimethyl phthalate (DMP), diethyl phthalate (DEP), dibutyl phthalate (DBP), dioctyl phthalate (DOP)	Lubricant, synthetic oil, rust preventing agent additive plasticizer for synthetic resin	×	○	○
	Oxyacids	Glycol acid, lactic acid, malic acid, citric acid, tartaric acid		×	×	×
	Nitro compounds	Nitromethane, nitroethane, nitroethylene, nitrobenzene, etc.		×	○	○
	Amines	Methylamine, dimethylamine, ethylamine, aniline, acetanilide, etc.	Additive of brake oil	×	×	×
	Nitriles	Acetonitrile, acrylonitrile, benzonitrile, acetoisonitrile, etc.	Raw material for nitrile rubber	×	○	○

○: Resistant, ×: Non-resistant (plastic will become damaged.)

Safety Precautions

Be sure to read this section before use.
Refer to Intro Page 63 for precautions for general pneumatic components.

Product-specific cautions: Air unit CXU Series

Design/selection

■ Use the T-brackets at regular intervals.
When the assembly is supported on only one end, up to three stations can be used. When it is supported on both ends, up to five stations can be used.

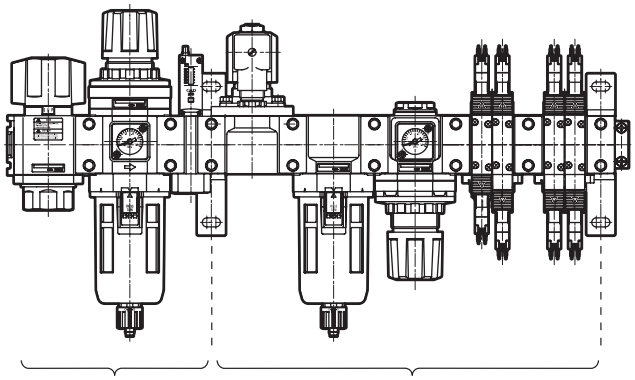

Use up to three stations for single support

Use up to five stations for double support

■ When a pilot operated 5-port valve (CXU30-4G2R) is used at max. flow rate, use with up to three stations.

One station consists of two solenoid valves. Up to six solenoid valves can be used.

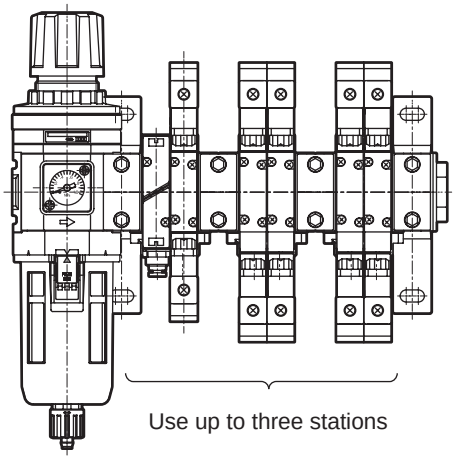

Use up to three stations

■ When using a pilot operated 2-port solenoid valve (CXU10-EXA) at max. flow rate
As a guideline, use one station when a 1000 Series regulator is connected, and up to four stations when a 3000 Series regulator is connected.

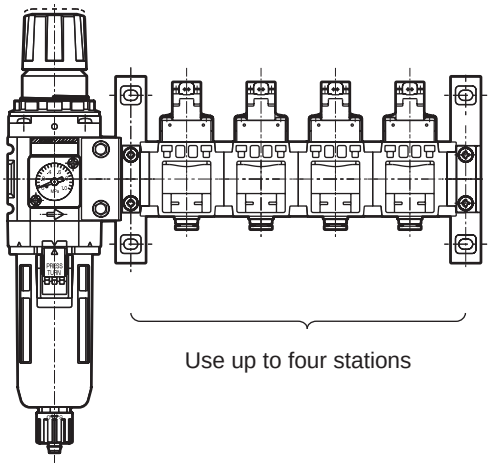

Use up to four stations

Mounting, installation and adjustment

■ With the 1000 Series combined unit, the bracket may twist up on one side. In this case, tighten and fix the bracket with screws so that it is mounted stably and so no problems will arise with use.

■ Notes on selecting CXU13-UN
If the 1000 Series and 3000 Series are combined together with a single support, the joiner may be damaged by the load. Use double support.

■ Tighten the fixing screw for the 1000 Series joiner to a torque of 1 to 1.2 N·m; for the 3000 Series joiner to a torque of 3 to 4 N·m.

Precision components

	Page
Glass float module (GFM)	1071
Precise suction plate (PVP)	1107
Magnetic spring buffer (FBU2)	1121

Glass float module

GFM

■ **Precision components**

Overview

The latest floating system for contactless, clean and damage-prevention transportation. By adopting a new material, a high quality floating system with significant reduction of air consumption and suppression of static electricity and particle generation is realized.

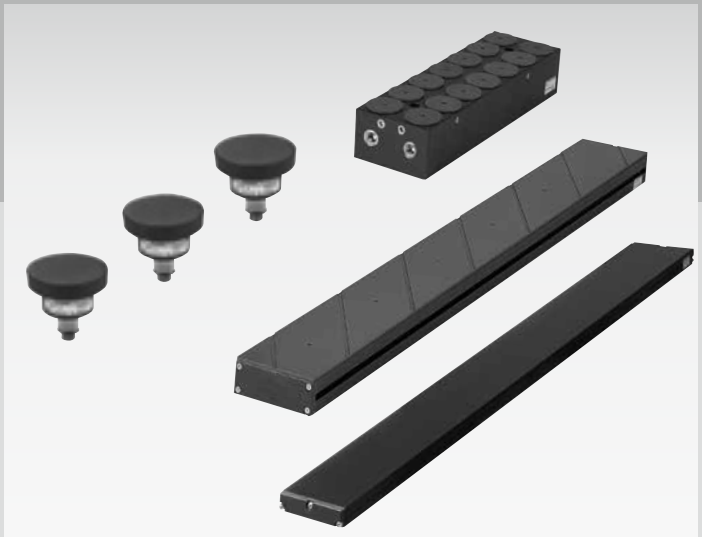

CONTENTS

Product introduction	1072
● Floating alignment pad GFM-A	1074
● High float rail GFM-T	1080
● Float rail GFM-R	1084
● Precision floating stage GFM-P	1092
GFM Technical data	1095
⚠ Safety precautions	1102

Line revolution contributes to quality

The latest CKD floating system glass float module GFM Series for contactless, clean and damage-prevention transportation.
By adopting a new material, a high quality floating system with significant reduction of air consumption and suppression of static electricity and particle generation is realized.

Supports floating applications and high-precision floating of substrates from the transport of glass substrates to process and product inspection.

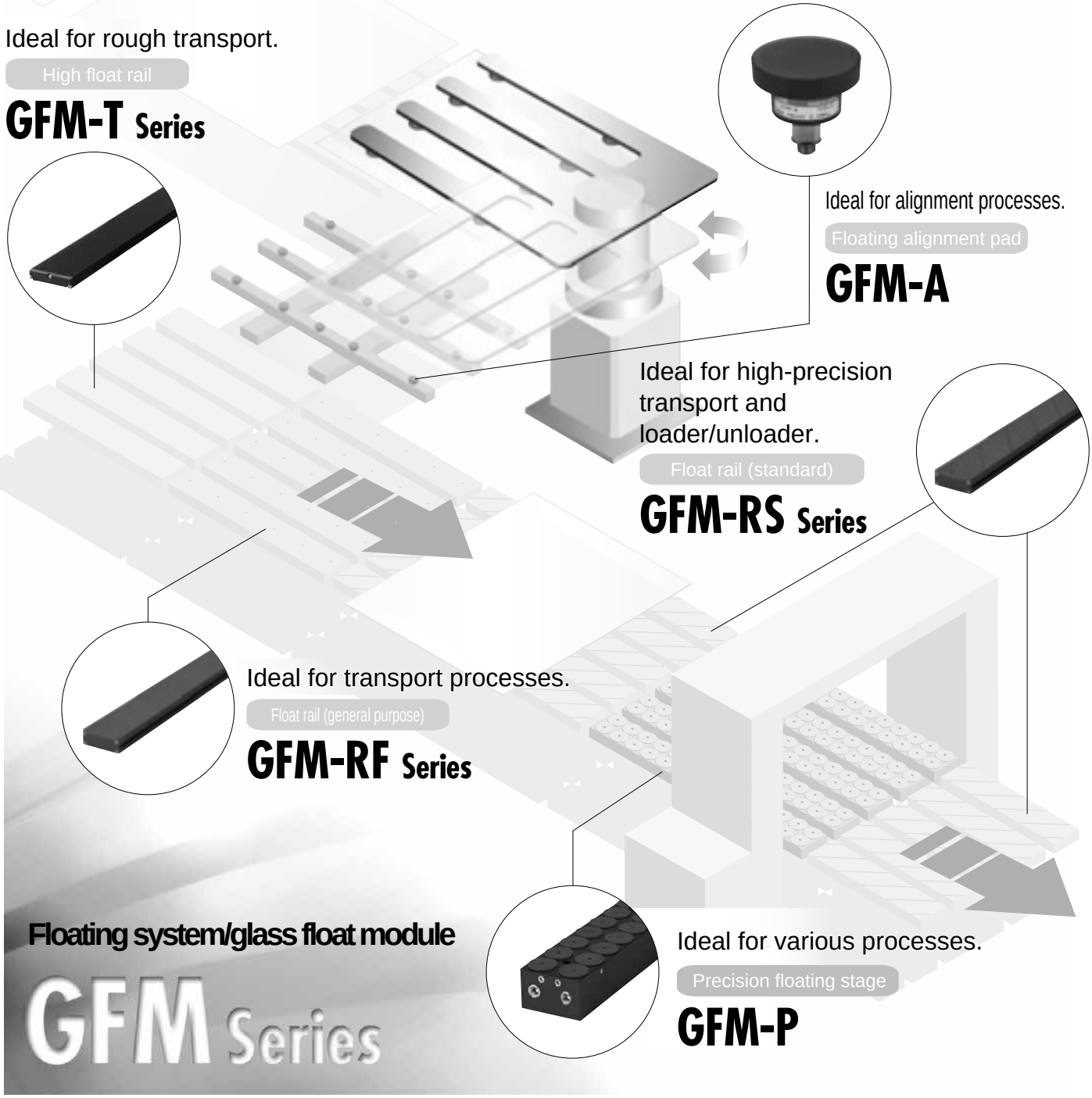

Ideal for rough transport.

High float rail

GFM-T Series

Ideal for alignment processes.

Floating alignment pad

GFM-A

Ideal for high-precision transport and loader/unloader.

Float rail (standard)

GFM-RS Series

Ideal for transport processes.

Float rail (general purpose)

GFM-RF Series

Ideal for various processes.

Precision floating stage

GFM-P

Floating system/glass float module

GFM Series

and yield improvement

Non-contact and stable high-precision floating

By adopting a new porous material, stable floating is achieved and air consumption is reduced.
(Excluding GFM-T)

Ideal for high-sensitivity inspection

The use of a black body prevents diffused reflection and improves the visibility of the workpiece.

Antistatic protection for workpieces

The use of a new antistatic material suppresses static electricity.
(Excluding GFM-T)

Extensive applications

We propose the ideal pneumatic components for floating.

Achieves class 10 level *

The new porous material suppresses the particles in floating air.

* The GFM Series is equivalent to JIS B 9920 Class 4 according to CKD testing, and the measured values include particle diameters of greater than or equal to 0.5 µm.

(Excluding GFM-T)

GFM Series variation

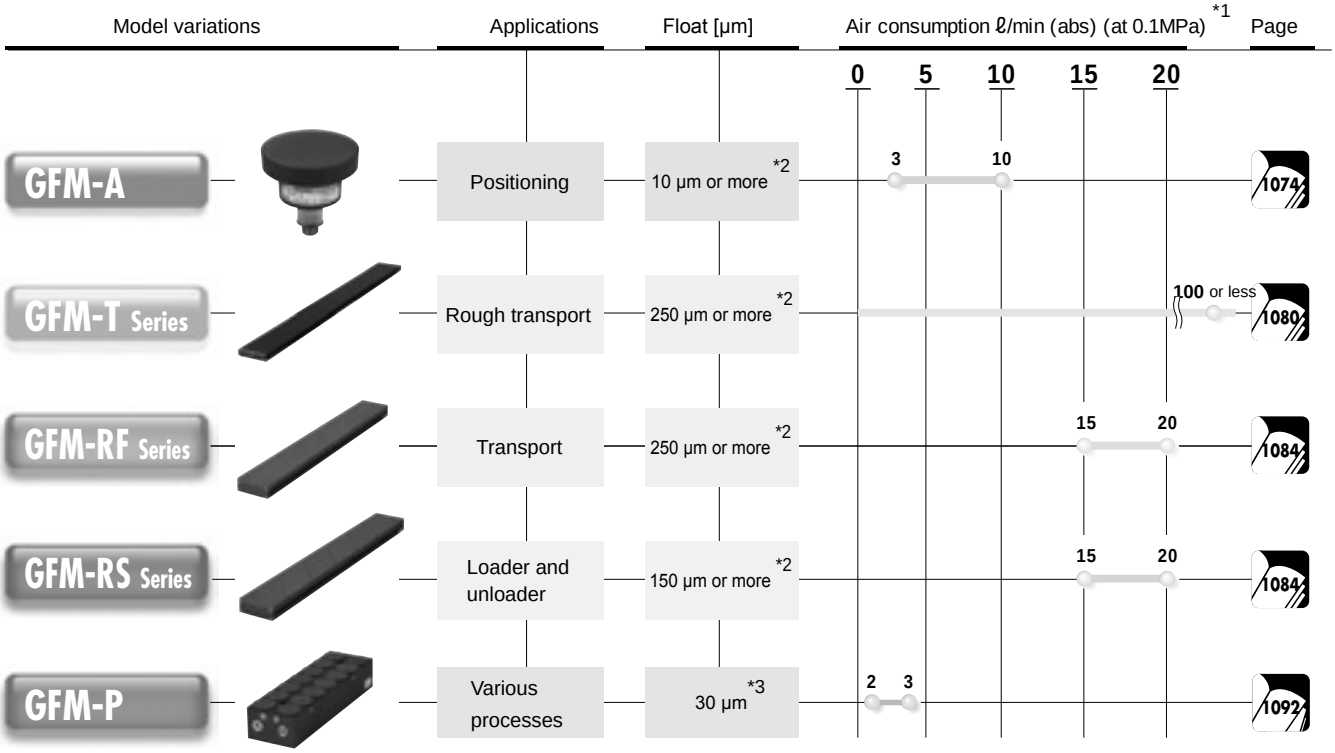

*1: Take this as a guideline for air consumption.
*2: Take this as a guideline for float amount.
*3: The numerical values change according to the combination of positive and negative pressure flow rate.



Floating alignment pad

GFM-A

Swinging which handles sag.

- Estimated float: 10 μm or more
- Main applications: Alignment

RoHS CAD

By adopting a new porous resin material and unique tracking mechanism, an alignment that supports sag is made possible.

■ Adopts CKD's unique "porous resin and tracking mechanism" (patented).

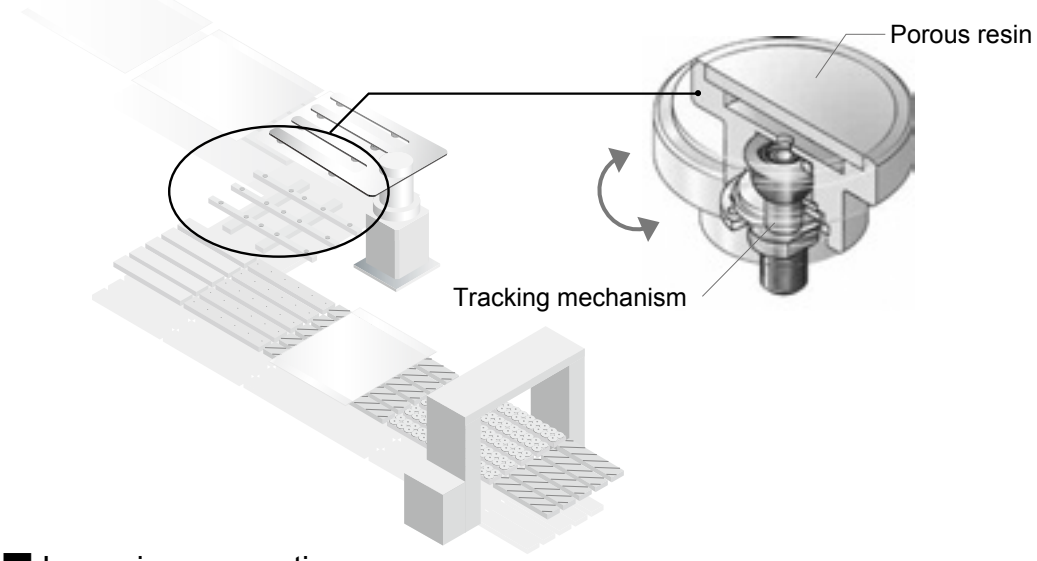

■ Less air consumption

By adopting a porous material, air consumption rate is reduced by half *.

* according to our test for GFM-A

■ Antistatic

By using the antistatic porous resin, the suppression of static electricity is enabled.

■ Supports sag freely

By tracing the sag of large glass substrates, etc., contactless floating can be achieved. (image diagram)

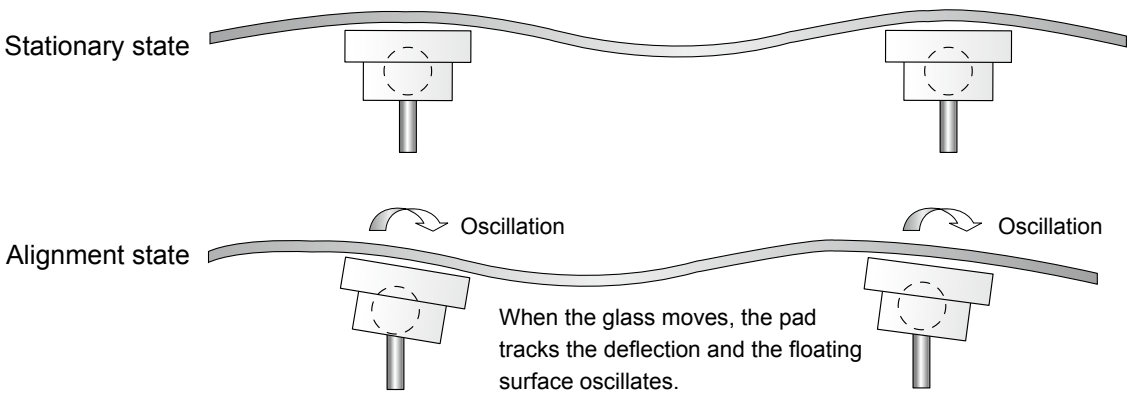

Specifications

Item		GFM-A
Working fluid		Compressed clean air [class 1.1.1 to 1.6.2]
Working pressure kPa	When floating	80 (≈12 psi, 0.8 bar) to 200 (≈29 psi, 2 bar)
	At suction	-90 (≈-13 psi, -0.9 bar) to -60 (≈-8.8 psi, -0.6 bar)
Operating ambient temperature °C		5 (41°F) to 40 (104°F)
Storage ambient temperature °C		-10 (14°F) to 60 (140°F) (no freezing)
Mounting orientation		Limited to the state when the porous surface is facing up
Applied load *1 N		1 to 5
Air consump *1 ℓ/min		10 or less
Suction holding force N		5 or less (perpendicular to the direction of suction surface)
Port size		M5
Weight g		Approx. 15

*1: This is the value when the supply air pressure is 100 kPa.

How to order

GFM - A

Model No.

Internal structure and parts list

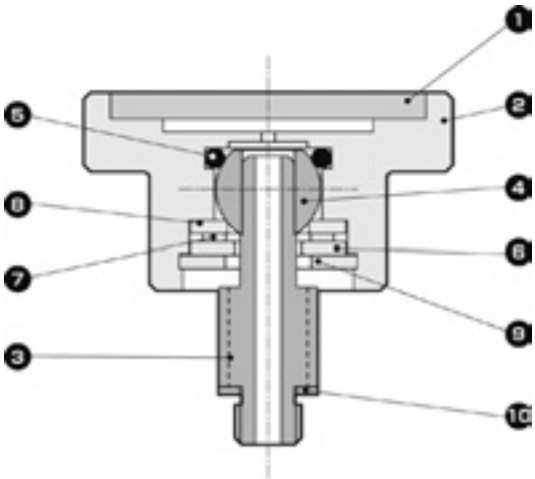

No.	Part name	Material	Remarks
1	Porous material	Polyphenylene sulfide	Containing carbon fiber
2	Body	Polyphenylene sulfide	Containing carbon fiber
3	Shaft	Stainless steel	
4	Steel ball	Stainless steel	
5	O-ring	Nitrile rubber	
6	Metal washer	Stainless steel	
7	Wave washer	Stainless steel	
8	Metal washer	Steel	Electroless nickel plating
9	C type snap ring for hole	Stainless steel	
10	Gasket	Nitrile rubber/steel	

Dimensions CAD

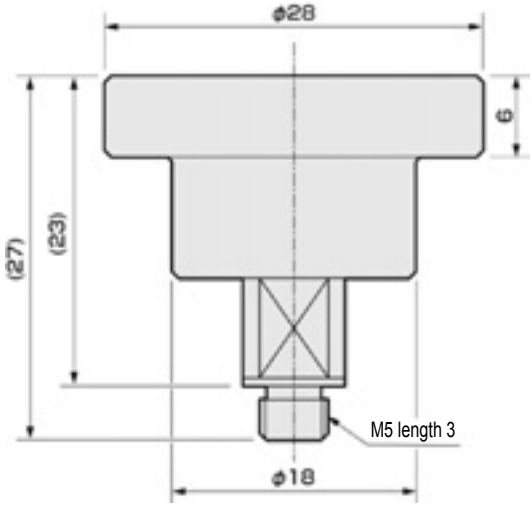

1 Floating height (reference data)

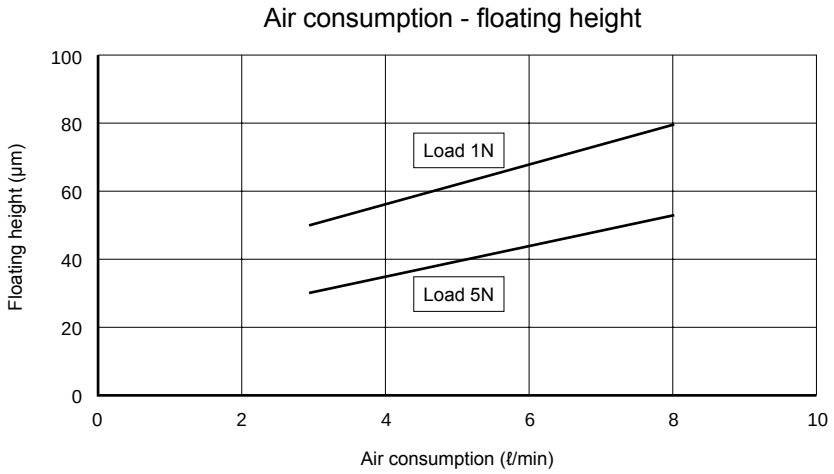

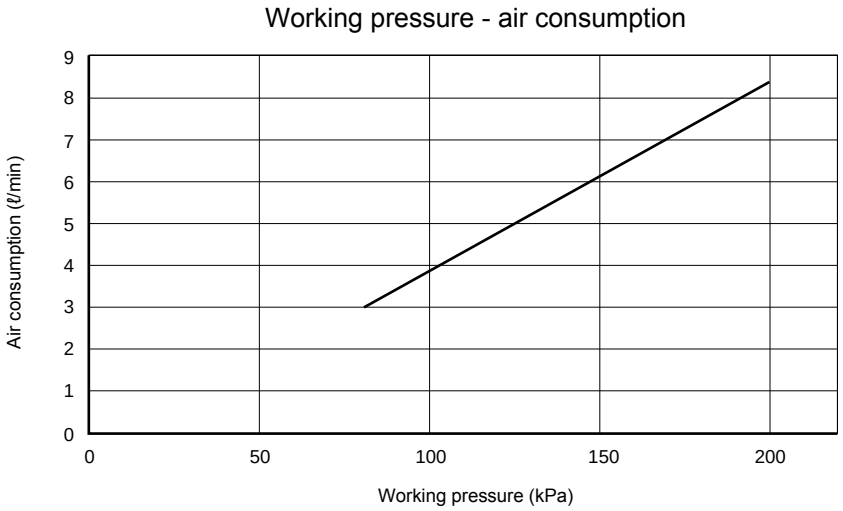

2 Dust generation rate (reference data)

[Measuring method]

(1) Set a test sample in the chamber.
(2) Supply air.
(3) Measure the number of particles when air flows continuously.

[Test circuit]

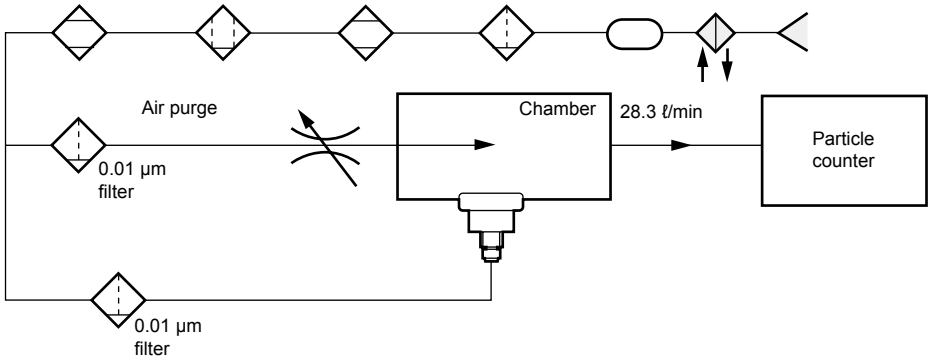

[Measuring instrument]

Particle counter : Laser dust monitor
Min. measurable particle diameter : 0.1 µm
Intake : 28.3 ℓ/min

[Results]

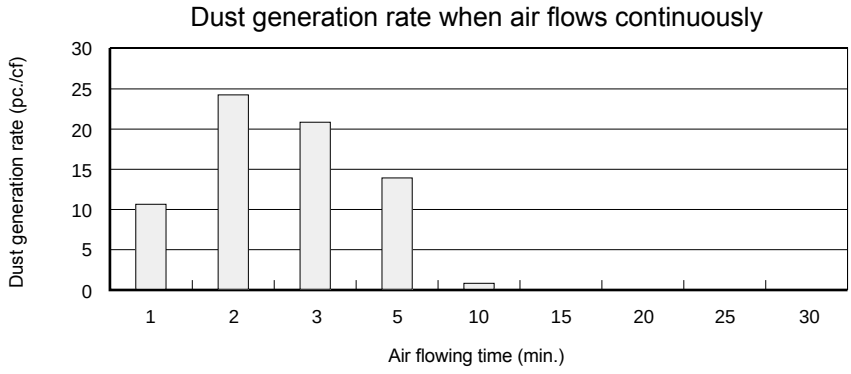

Note: The dust generation rate includes particles with diameter of 0.5 µm or more.

3 Static electricity change (reference data)

[Measuring method]

(1) Mount the sensor head at the center of the glass.
(2) Measure the indicated static electricity (voltage) when air is supplied.

[Test circuit]

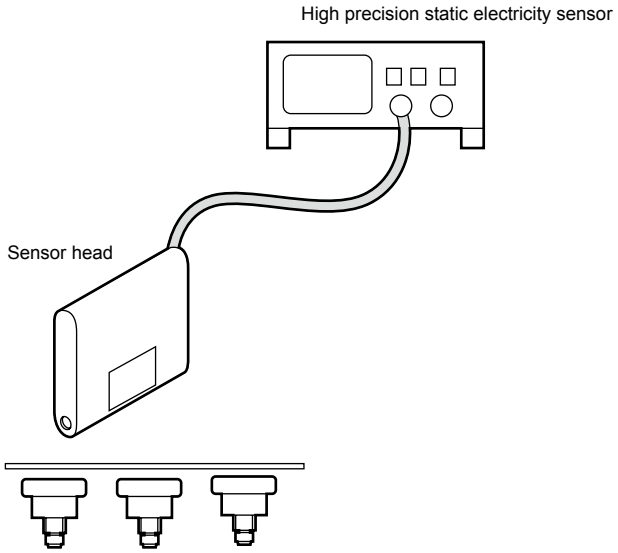

[Measuring instrument]

Static electricity measurement: High-precision static electricity measuring device (contactless)

[Results]

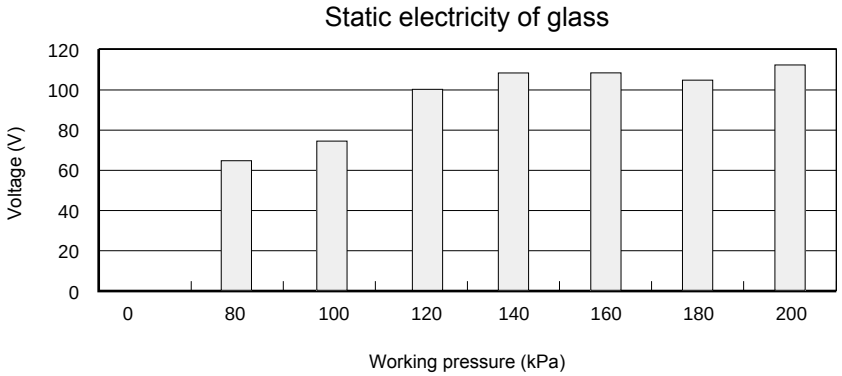

MEMO

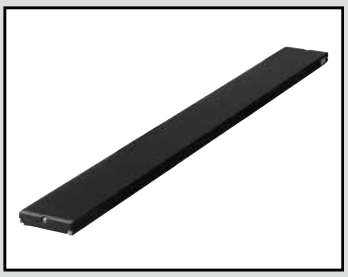

Floating system/Glass float module

High float rail **GFM-T** Series

- Float: 250 μm or more
- Main applications: High float transportation

RoHS CAD

A unique design that takes advantage of the vacuum technology know-how cultivated over many years, allowing non-contact transport with high float.

■ CKD's unique design

Features fluid technology developed by CKD over many years. Achieves a high float at a low consumption rate.

■ Easy installation

The trouble of installation is reduced by the bracket-less direct piping and direct mounting structure. This helps reduce the installation steps in production lines with a long transport distance.

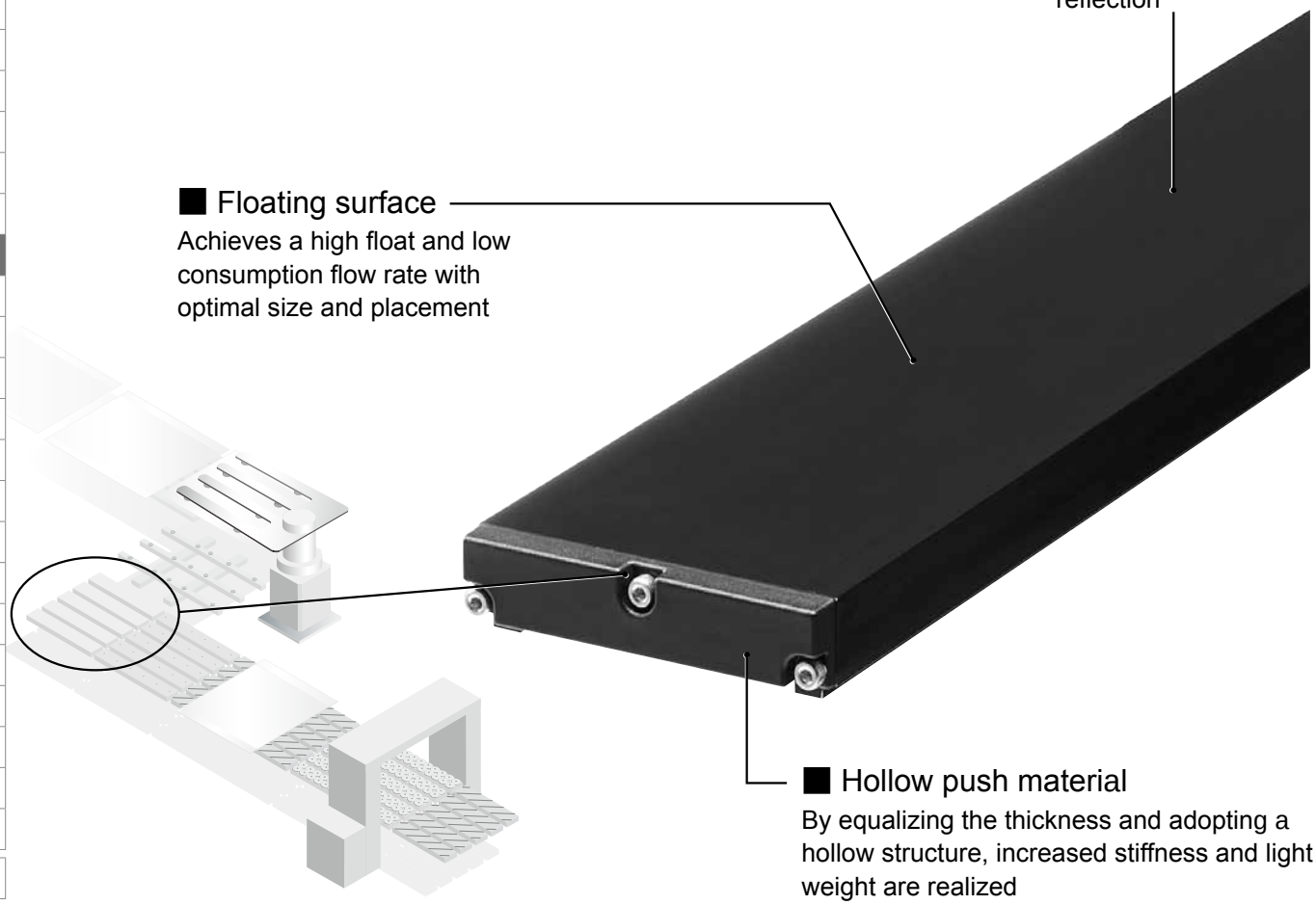

Specifications

Item	GFM-T-500	GFM-T-750	GFM-T-1000
Product size (L×W×H) mm	500×100×25	750×100×25	1000×100×25
Working fluid	Compressed clean air [Class 1.6.2]		
Operating ambient temperature °C	5 (41°F) to 40 (104°F)		
Storage ambient temperature °C	-10 (14°F) to 60 (140°F) (no freezing)		
Working pressure (positive pressure) MPa	0 (≈0 psi, 0 bar) to 0.2 (≈29 psi, 2 bar)		
Air consumption *1 ℓ/min	100 or less		
Floating height *2 μm	250 or more		
Weight kg	Approx. 1.7	Approx. 2.5	Approx. 3.3

*1: Indicates the air consumption when air is supplied at 0.1 MPa.
*2: Indicates the value when air is supplied at 0.1 MPa. and glass with thickness of 0.7 mm is floated. Take this as a guide for floating height.

How to order

GFM - T - 500

Model No.

Ⓐ Product length

Description
Ⓐ Product length (mm)
500
750
1000

Appearance and parts list

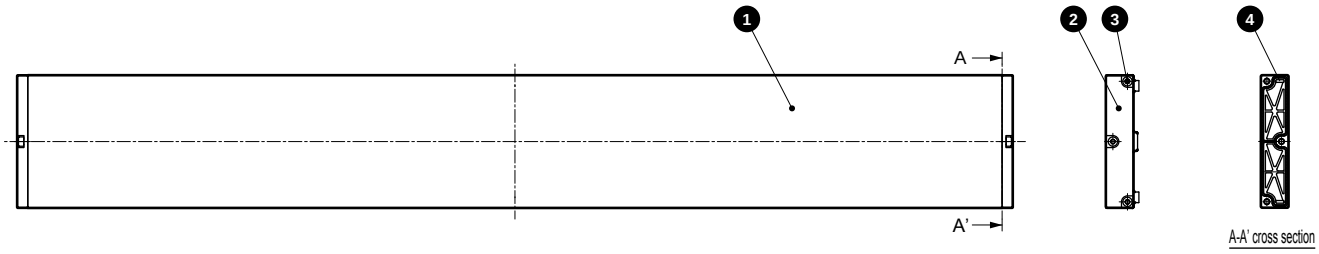

No.	Part name	Material	Remarks
1	Body	Aluminum alloy	Black alumite treatment *
2	Lid	Glass fiber filled polyamide	
3	Hexagon socket head cap screw	Stainless steel	
4	Gasket	Nitrile rubber	

* White lines may be seen on the exterior of the product. They are produced during the manufacturing process and do not affect the performance of the product.

Dimensions

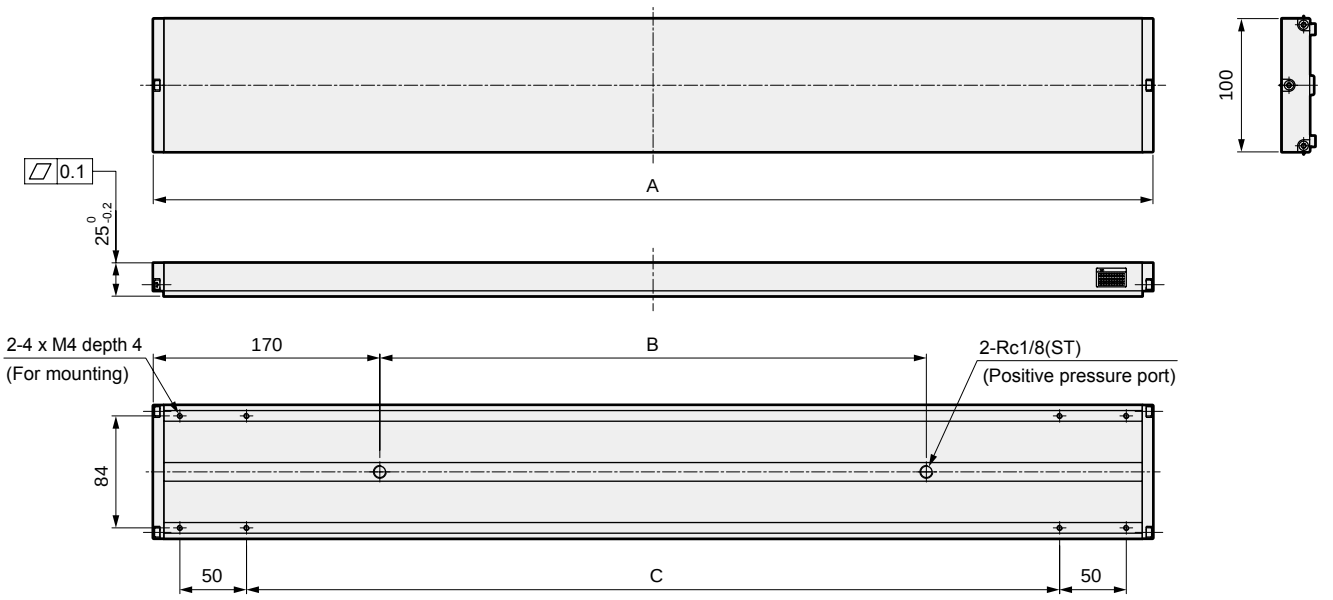

Model No.	A	B	C
GFM-T-500	500	160	360
GFM-T-750	750	410	610
GFM-T-1000	1000	660	860

Technical data

● Floating height

[Measuring method]

(1) The glass surface is the reference point (zero point) when the supply air pressure is zero.
(2) Supply the air, let the glass float and measure the displacement.

Sample: : GFM-T-1000
Floating height : Smallest value among the displacements at 10 measurement points (Measurement points are shown below)
Glass size : t0.7×100×500

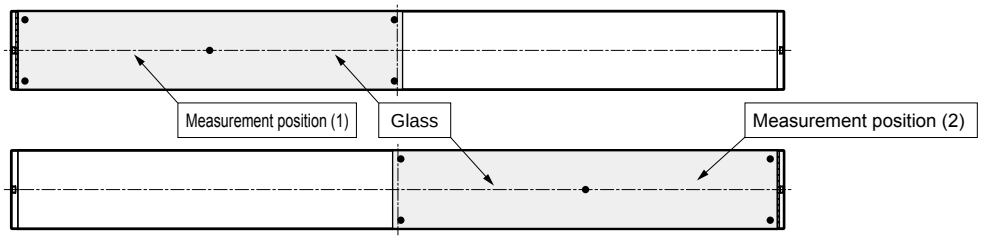

[Results]

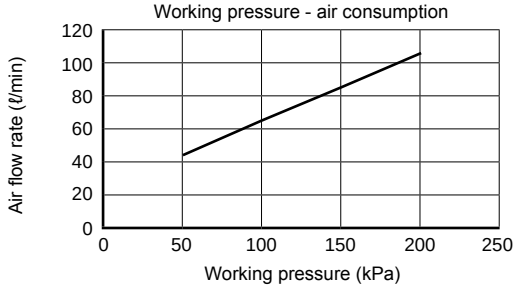

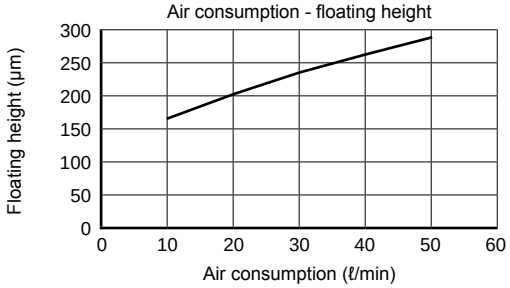

MEMO

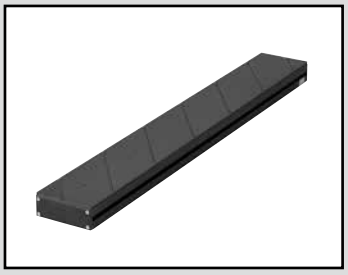

Floating system/Glass float module

Float rail GFM-R$^{F}_{S}$ Series

● Float: 150 μm or more ● Main applications: Transportation

Made-to-order product RoHS CAD

By adopting a new carbon graphite material and unique design, a floating transport system with high reliability is made possible.

■ CKD's unique design (patented)

Features fluid technology developed by CKD over many years.
A floating surface with a shape that enables secure floating has been realized.

■ Antistatic

By adopting carbon graphite as the porous material, antistatic characteristics are realized. Because the flow rate of floating air transmitted through the porous material decreases, electric charge on the workpiece is not generated.

■ Stable floating

Stable floating over a large area is enabled through the use of porous material and an ideally arranged air path.

■ Low dust generation

By adopting a carbon graphite porous material, the suppression of particles in floating air has been realized.

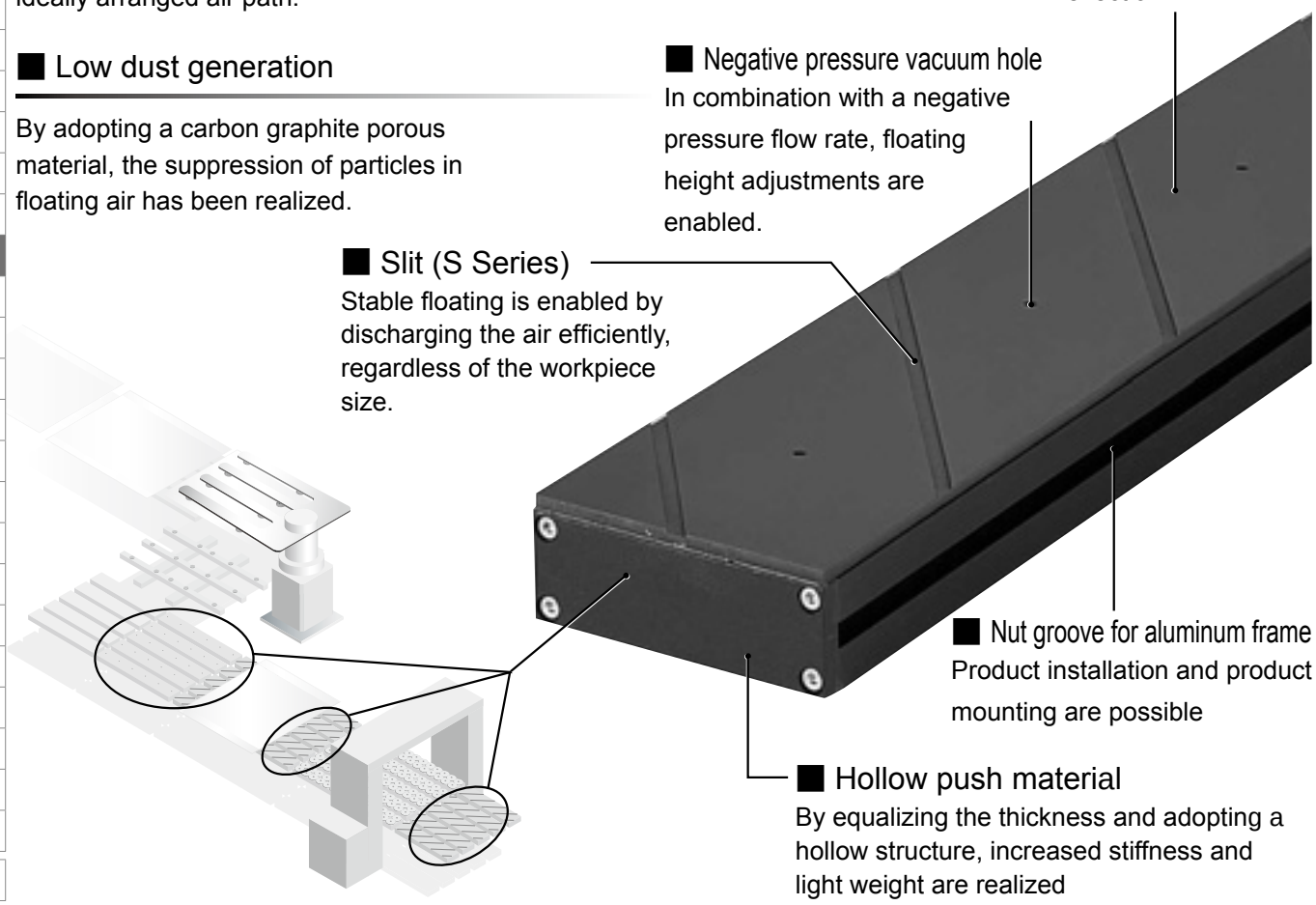

Specifications

Item		GFM-RS-500 GFM-RF-500	GFM-RS-750 GFM-RF-750	GFM-RS-1000 GFM-RF-1000
Product size (L×W×H) mm		501×102×40	751×102×40	1001×102×40
Size of floating surface (L x W) mm		500×100	750×100	1000×100
Working fluid		Compressed clean air [class 1.1.1 to 1.6.2]		
Operating ambient temperature °C		5 (41°F) to 40 (104°F)		
Storage ambient temperature °C		-10 (14°F) to 60 (140°F) (no freezing)		
Working pressure	Positive pressure MPa	0 (≈0 psi, 0 bar) to 0.2 (≈29 psi, 2 bar)		
	Negative pressure kPa	-50 (≈-7.2 psi, -0.5 bar) to 0 (≈0 psi, 0 bar)		
Air consumption *1 ℓ/min		Approx. 12	Approx. 18	Approx. 24
Floating height *2 μm		Approx. 150 (GFM-RS)/Approx. 250 (GFM-RF)		
Weight kg		Approx. 1.8	Approx. 2.7	Approx. 3.6

*1: Indicates the air consumption when air is supplied at 0.1 MPa. Air consumption varies depending on the status of the workpiece and the required float. Take this as a guide for calculation of the flow rate.
*2: Indicates the value when air is supplied at 0.1 MPa. Indicates the value when glass with thickness of 0.7 mm is floated. Take this as a guide for floating height.

How to order

GFM - RS - 500

Model No.
Ⓐ Surface shape
Ⓑ Length of floating surface

Code	Description
Ⓐ Surface shape	
RS	With slit
RF	Without slit
Ⓑ Length of floating surface (mm)	
500	
750	
1000	

Model No. of single bracket kit

GFM - R - B

* Refer to page 1087 for details of the bracket kit.

Appearance and parts list

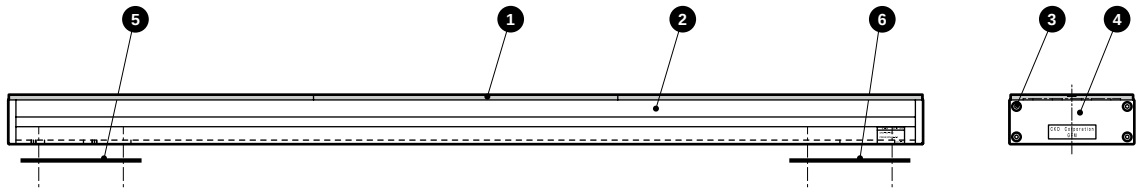

No.	Part name	Material	Remarks
1	Porous material	Carbon graphite	
2	Base	Aluminum alloy	Black alumite treatment *
3	Hexagon socket head cap screw	Stainless steel	
4	Lid	ABS resin	
5	Positive pressure gasket	Nitrile rubber	Included parts
6	Negative pressure gasket	Nitrile rubber	Included parts

* White lines may be seen on the exterior of the product. They are produced during the manufacturing process and do not affect the performance of the product.

Dimensions CAD

● GFM-RS with slit

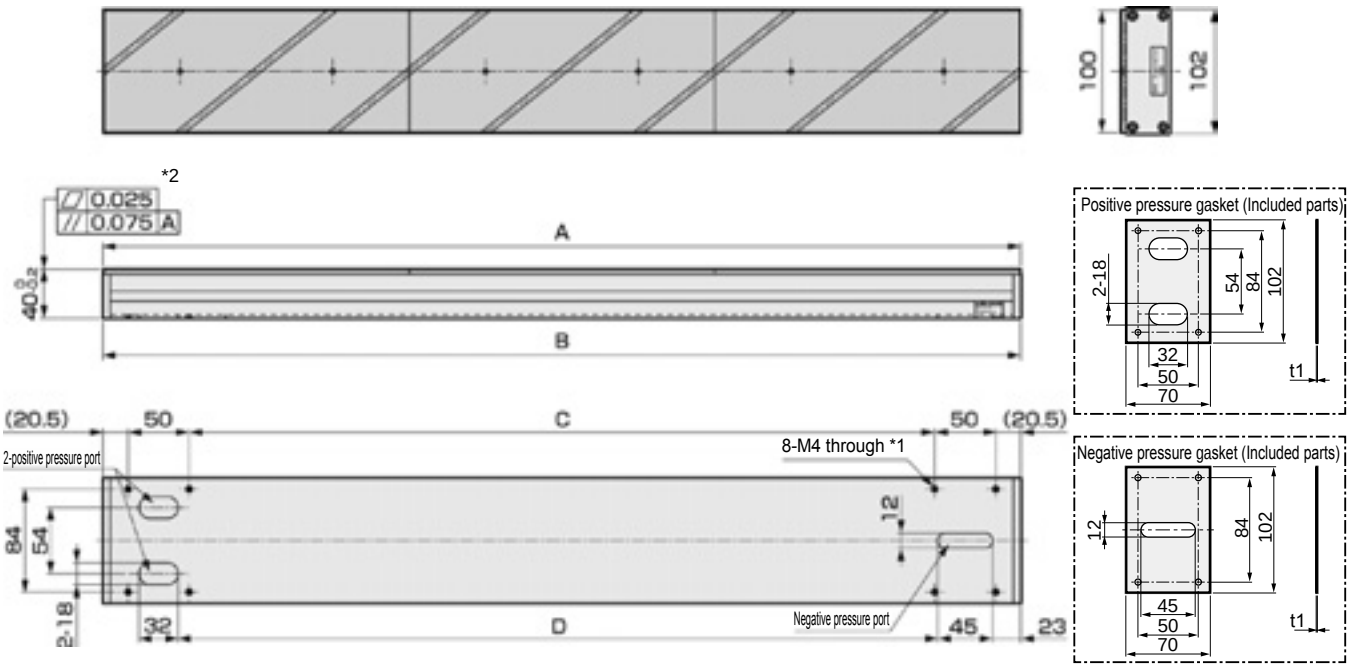

● GFM-RF without slit

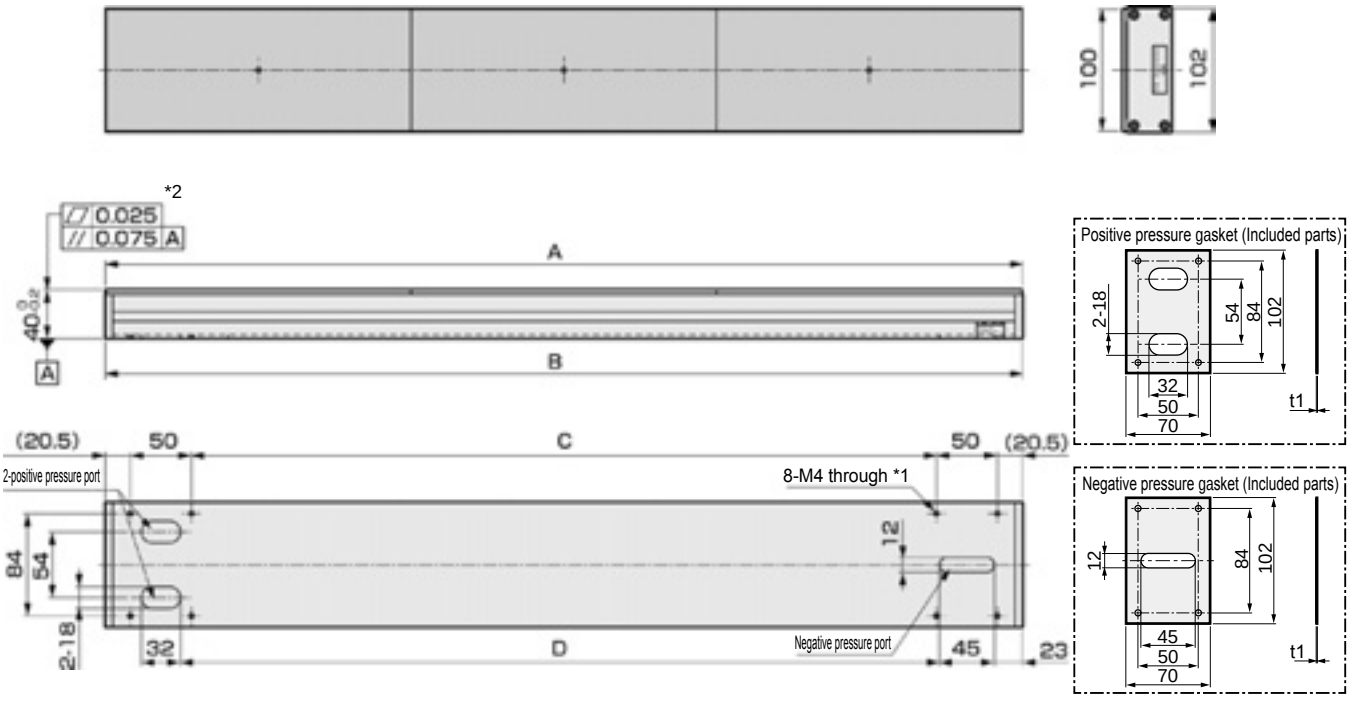

*1: Goes through the positive pressure port.
*2: Measurement value in a constant temperature room of 25°C. Accuracy may vary in atmospheres other than 25°C.
For GFM-R*-1000, the flatness is 0.05 mm and the parallelism is 0.1 mm.

Model No.	A	B	C	D
GFM-R*-500	500	501	360	371.5
GFM-R*-750	750	751	610	621.5
GFM-R*-1000	1000	1001	860	871.5

Dimensions (bracket kit)

● Model No.: GFM-R-B

(Content of kit: positive pressure bracket, negative pressure bracket, 8 hexagon socket head cap screws, 8 gaskets for screw)

· Positive pressure bracket

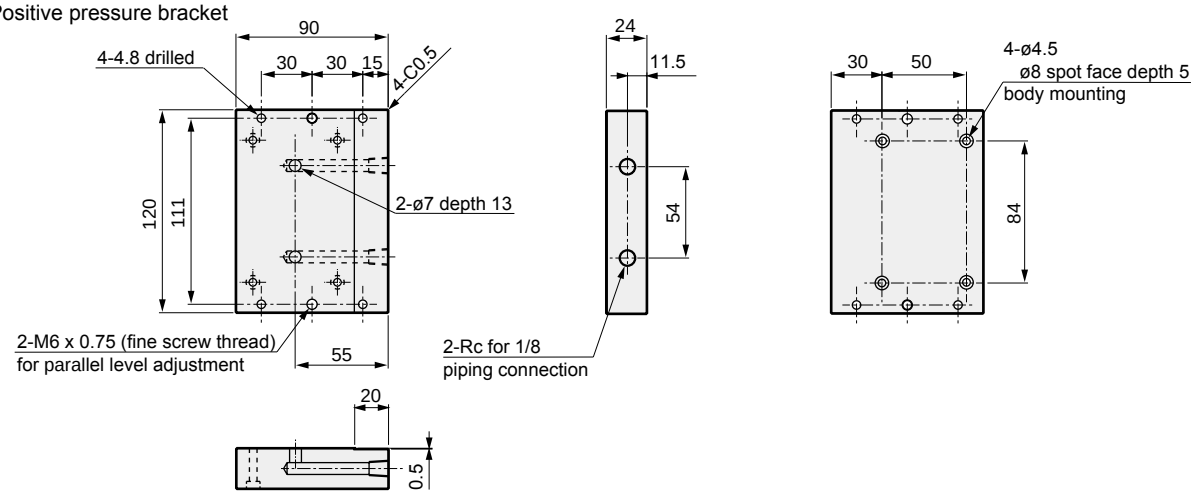

Weight: 680 g
(Accessory: Approx. 20 g included)

· Negative pressure bracket

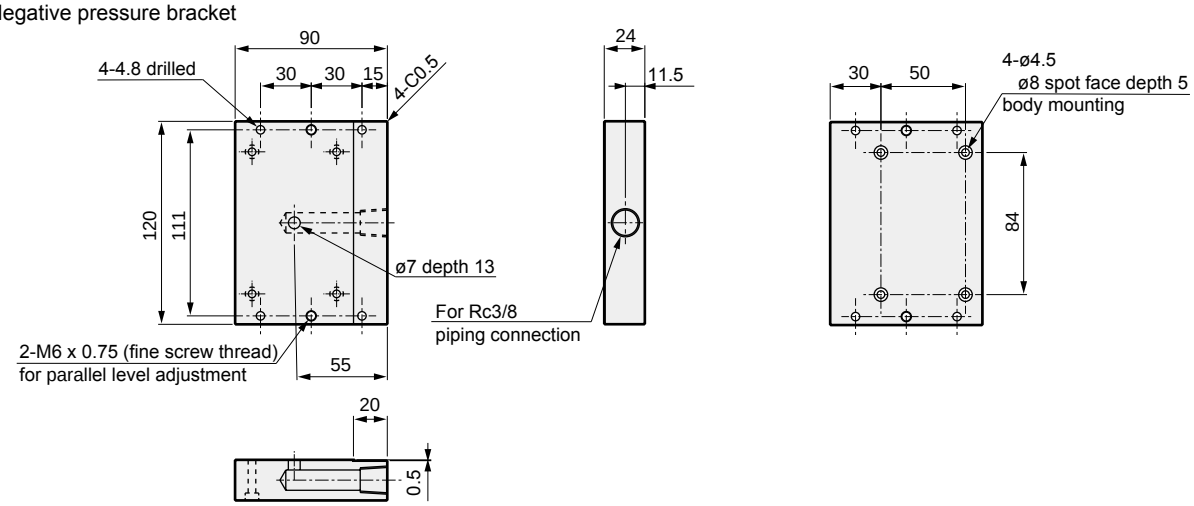

Weight: 680 g
(Accessory: Approx. 20 g included)

· Example of bracket kit installation

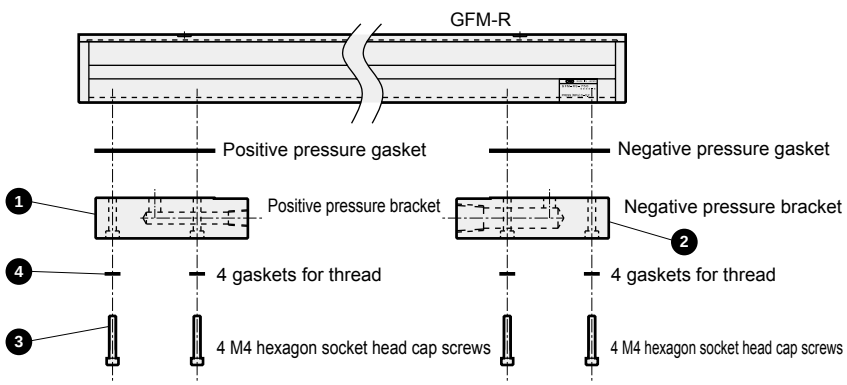

No.	Part name	Material	Remarks
1	Positive pressure bracket	Aluminum alloy	White alumite treatment
2	Negative pressure bracket	Aluminum alloy	White alumite treatment
3	Hex socket screw	Stainless steel	
4	Gasket for thread	Nitrile rubber/steel	

1 Floating height

[Measuring method]

(1) The glass surface is the reference point (zero point) when the supply air pressure is zero.
(2) Let the glass float and measure the displacement.

Floating height	: Smallest value among the displacements at 18 measurement points (For 18 measurement points, refer to the measuring method of floating flatness)
Glass size	: t0.7×100×400

[Results]

Negative pressure condition: 0 kPa

■ With slit (GFM-RS-750)

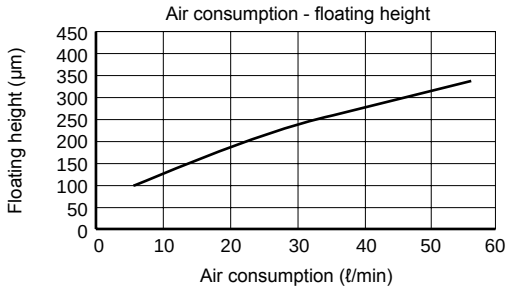

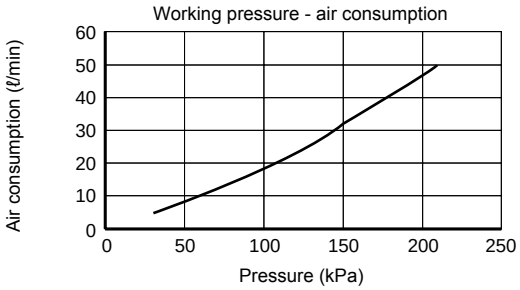

■ Without slit (GFM-RF-750)

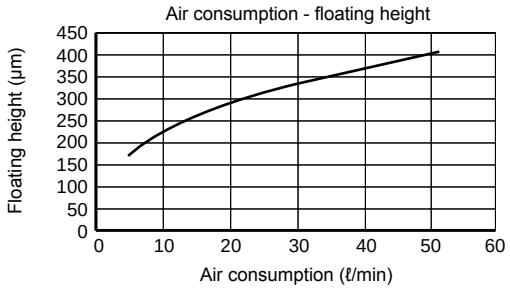

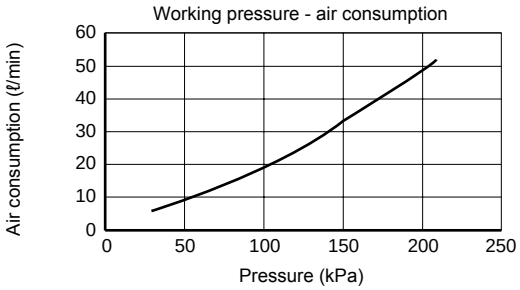

Negative pressure condition: -0.8 kPa

■ With slit (GFM-RS-750)

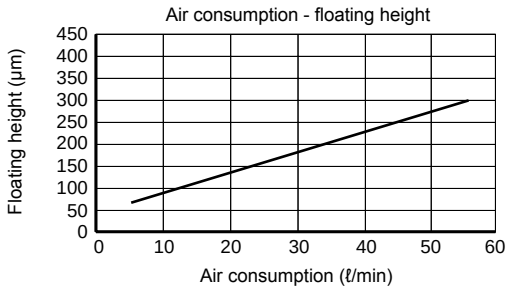

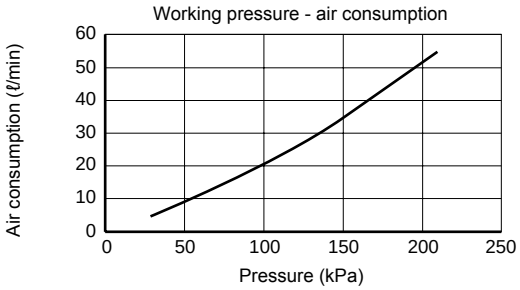

■ Without slit (GFM-RF-750)

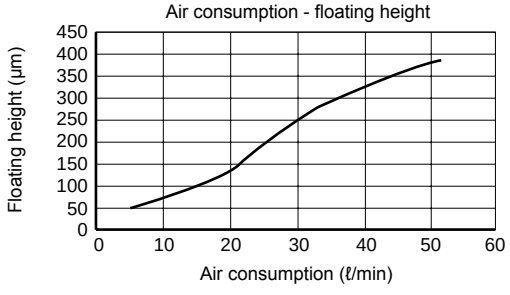

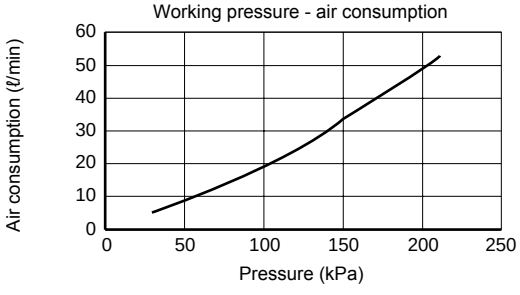

2 Floating flatness

[Measuring method]

(1) The glass surface is the reference point (zero point) when the supply air pressure is zero.
(2) Let the glass float and measure the displacement.
(3) At glass position A, measure 9 points.
(4) At glass position B, measure 9 points.

Floating flatness : (max. - min.) value in the displacements at 18 measurement points

Glass size : t0.7-100×400



[Measuring instrument]

Laser displacement meter: regular reflection (for measurement of transparent objects)

[Results]

■ With slit (GFM-RS-750)

Negative pressure condition: 0 kPa

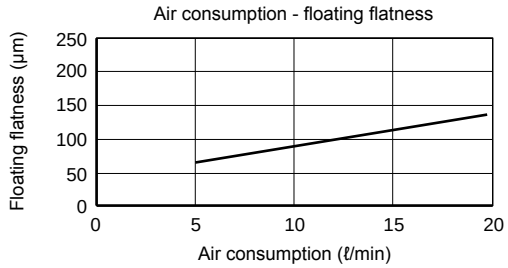

Negative pressure condition: -0.8 kPa

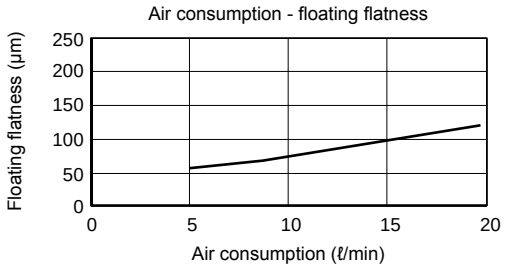

■ Without slit (GFM-RF-750)

Negative pressure condition: 0 kPa

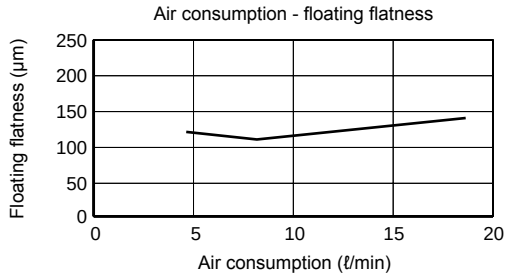

Negative pressure condition: -0.8 kPa

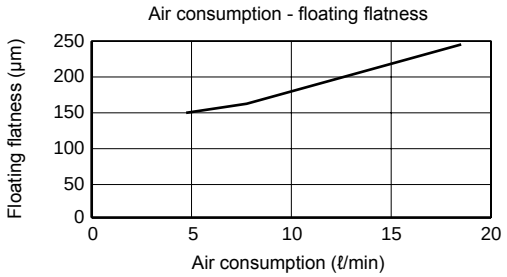

3 Dust generation rate

[Measuring method]

(1) Set a test sample in an acrylic chamber.
(2) Supply air at 100 kPa (18 to 20 ℓ/min).
(3) Measure the number of particles when air flows continuously.

[Test circuit]

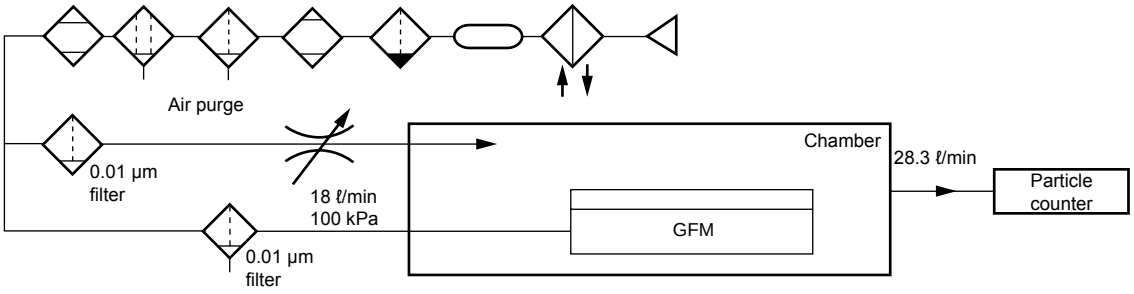

[Measuring instrument]

Particle counter : Laser dust monitor
Min. measurable particle diameter : 0.1 µm
Intake : 28.3 ℓ/min

[Results]

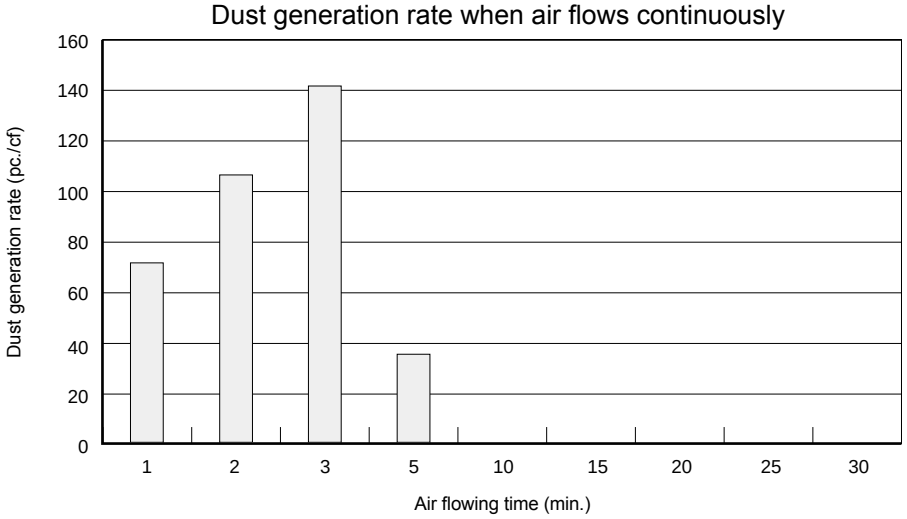

Note: The dust generation rate includes particles with diameter of 0.5 µm or more.

4 Change of static electricity (with slit)

[Measuring method]

(1) Mount the sensor head on the center of glass.
(2) Measure the indicated value of static electricity (voltage) when air is supplied.

[Test circuit]

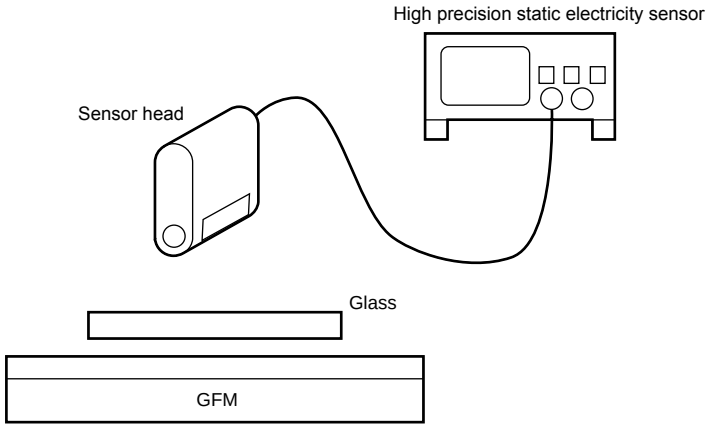

[Measuring instrument]

Static electricity measurement: High-precision static electricity measuring device (contactless)

[Results]

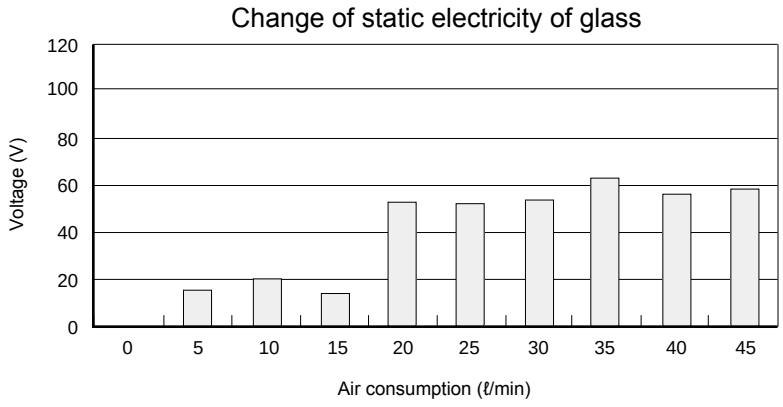

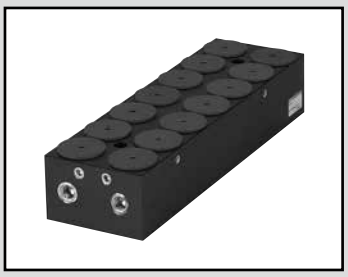

Floating system/Glass float module

Precision floating stage **GFM-P**

● Float: 30±6 μm ● Main applications: Various inspection processes, processing process

Made-to-order product RoHS CAD

By adopting a new carbon graphite porous material and unique design, extremely high precision floating is made possible.

■ CKD's unique design (patented)

Features fluid technology developed by CKD over many years.
A floating surface shape that enables floating with high precision has been realized.

■ High precision

By using ultra-precise machining, a high level of flatness and parallelism are realized.

■ High floating accuracy

Through a combination of positive pressure and negative pressure flow rates, high-precision floating is possible.

■ Antistatic

By adopting carbon graphite, antistatic characteristics are realized.
Because the flow rate of floating air transmitted through the porous material decreases, electric charge on the workpiece is not generated.

■ Low dust generation

By adopting a carbon graphite porous material, the suppression of particles in floating air has been realized.

■ Negative pressure vacuum hole
Through a combination with negative pressure flow rate, high-precision floating is possible.

■ Black body
Suppresses irregular reflection

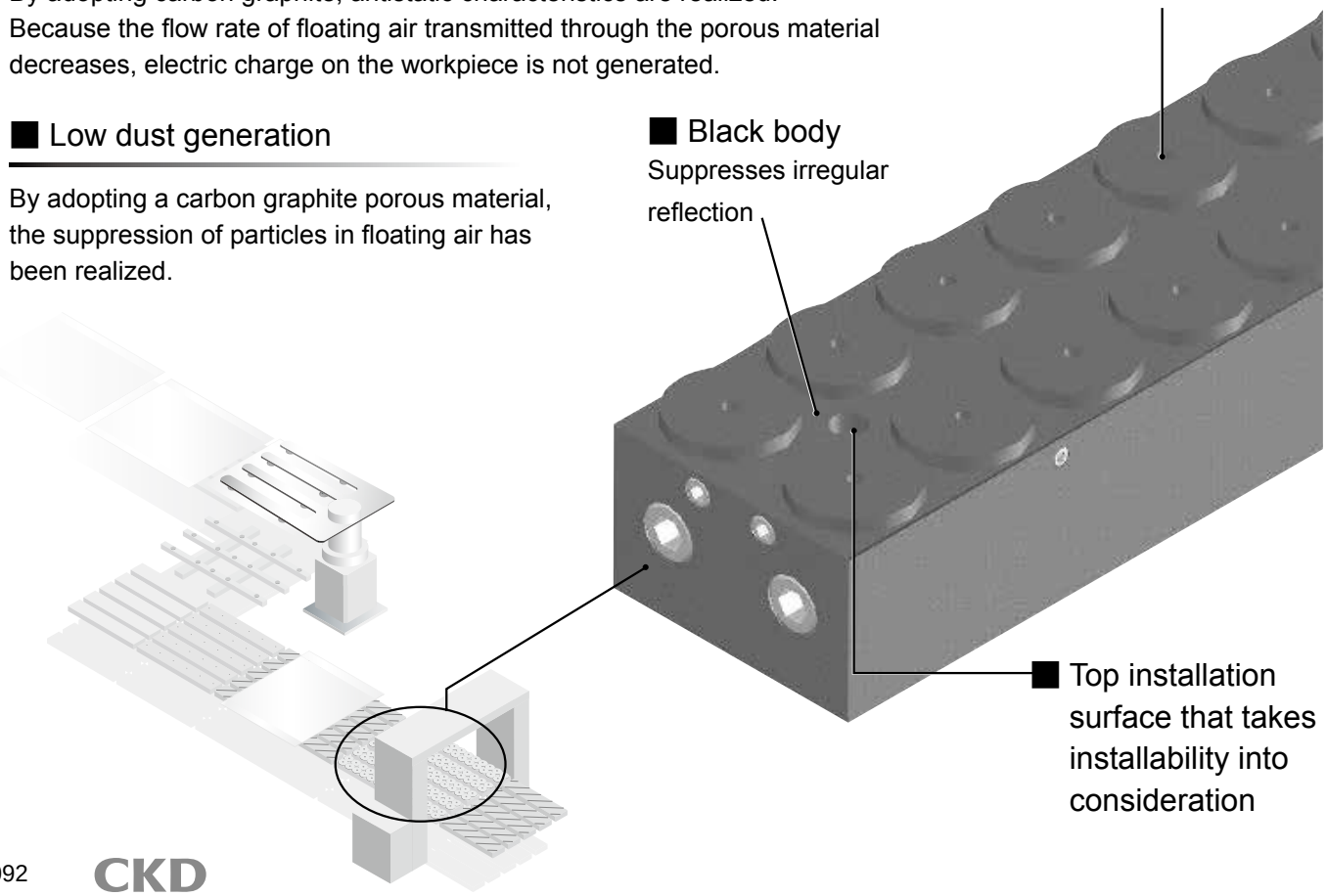

■ Top installation surface that takes installability into consideration

Specifications

Item		GFM-P
Product size (L×W×H) mm		250×76×50
Size of floating surface (L x W) mm		250×76
Working fluid		Compressed clean air [class 1.1.1 to 1.6.2]
Operating ambient temperature °C		5 (41°F) to 40 (104°F)
Storage ambient temperature °C		-10 (14°F) to 60 (140°F) (no freezing)
Working pressure	Positive pressure MPa	0 (≈0 psi, 0 bar) to 0.2 (≈29 psi, 2 bar)
	Negative pressure kPa	-50 (≈-7.2 psi, -0.5 bar) to 0 (≈0 psi, 0 bar)
Floating flatness *1 μm		12 μm or less (when floating 30 μm)
Air consumption *2 ℓ/min		Approx. 2 to 3
Floating height *3 μm		Approx. 70
Weight kg		Approx. 2.2

*1: Indicates the difference in (max. - min.) of the floating surface. The condition of supply flow rate varies depending on the status of the workpiece and your usage conditions. Take this as a guide for floating flatness.
*2: Indicates the air consumption when air is supplied at 0.1 MPa. Air consumption varies depending on the status of the workpiece and the required float. Take this as a guide for calculation of the flow rate.
*3: Indicates the value when air is supplied at 0.1 MPa. Indicates the value when glass with thickness of 0.7 mm is floated. Take this as a guide for floating height.

How to order

GFM - P

Model No.

Model No. of single bracket kit

GFM - P - B

* Refer to page 1094 for details of the bracket kit.

Appearance and parts list

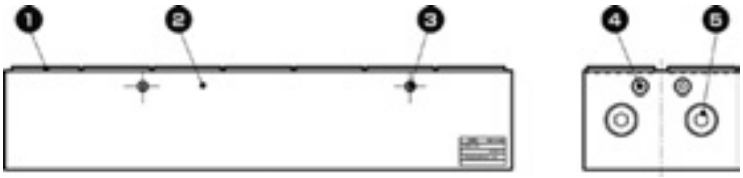

No.	Part name	Material	Remarks
1	Porous material	Carbon graphite	
2	Base	Aluminum alloy	Black alumite treatment *
3	Hexagon socket set screw	Stainless steel	
4	Hexagon socket set screw	Stainless steel	
5	Hexagon socket set screw	Stainless steel	

* White lines may be seen on the exterior of the product. They are produced during the manufacturing process and do not affect the performance of the product.

Dimensions

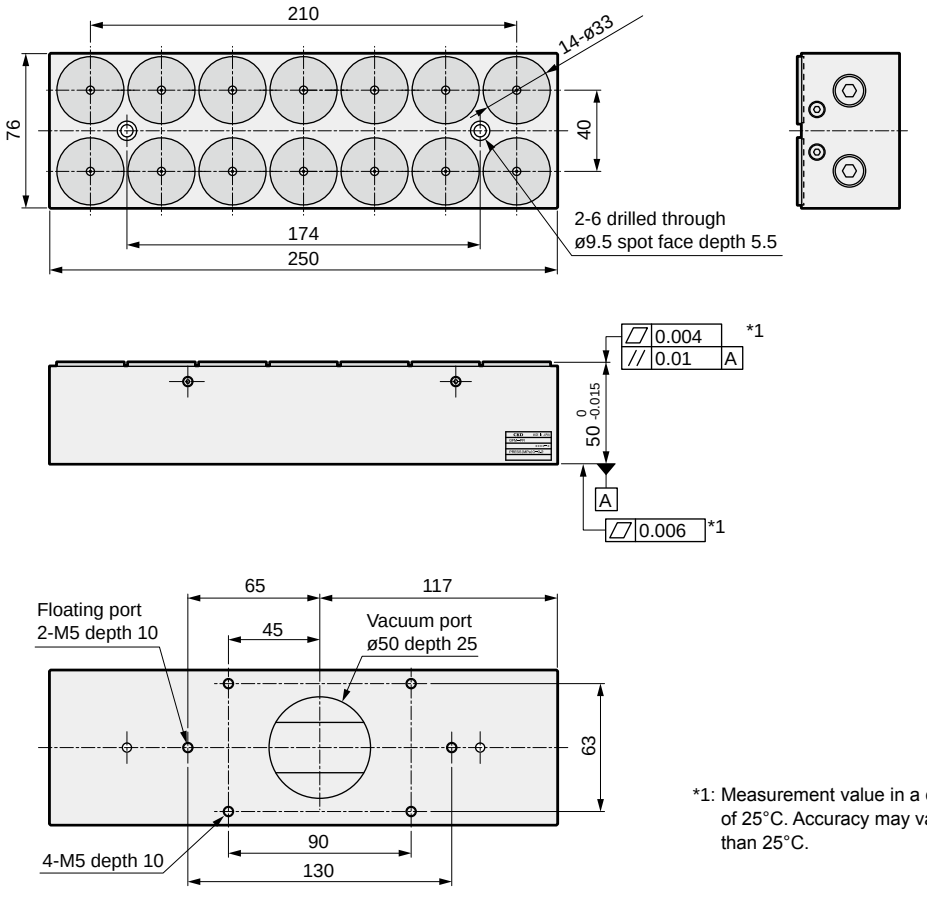

*1: Measurement value in a constant temperature room of 25°C. Accuracy may vary in atmospheres other than 25°C.

Dimensions (bracket kit)

● Model No.: GFM-P-B
(Content of kit: Bracket, O-ring, 4 hexagon socket head cap screws)

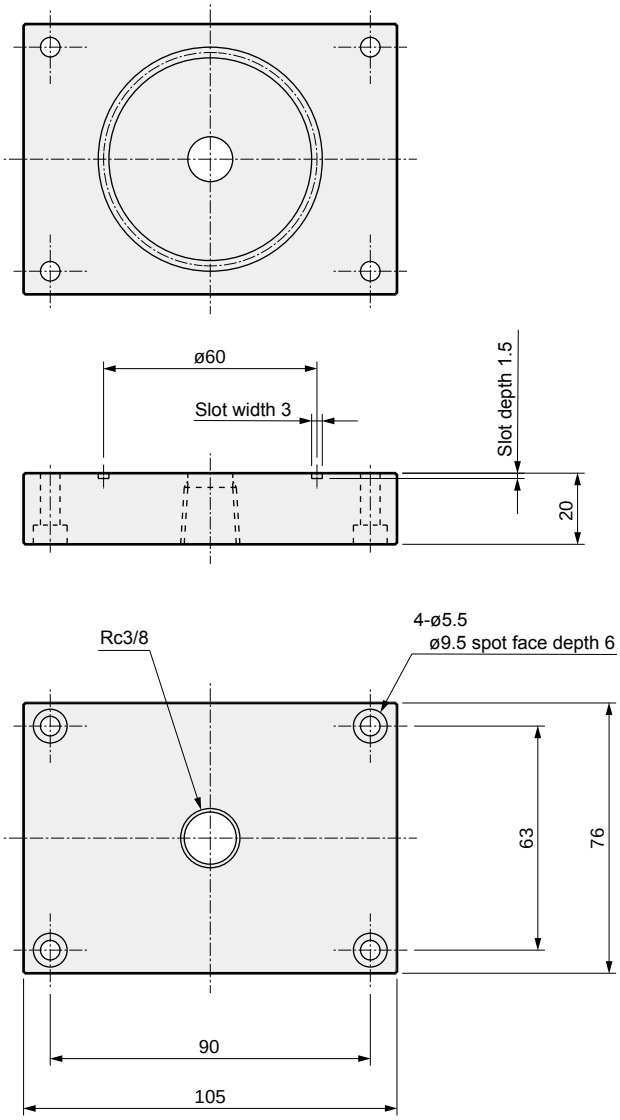

Weight: 430g
(Accessory: Approx. 20 g included)

● Example of bracket kit installation

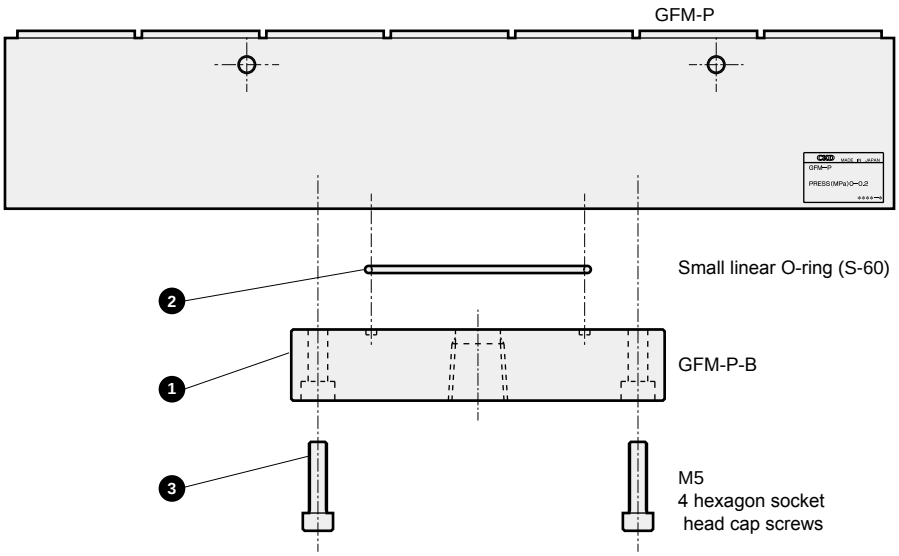

No.	Part name	Material	Remarks
1	Bracket	Aluminum alloy	White alumite treatment
2	O-ring	Nitrile rubber	
3	Hex socket screw	Stainless steel	

1 Floating height/floating flatness 1

[Measuring method]

(1) The glass surface is the reference point (zero point) when the supply air pressure is zero.
(2) Let the glass float and measure the displacement.

Floating height : Average value in the displacements at 9 measurement points
Glass size : t0.7×76×250

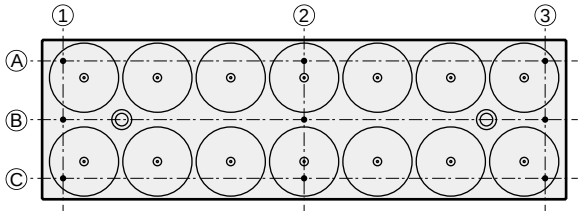

[Results]

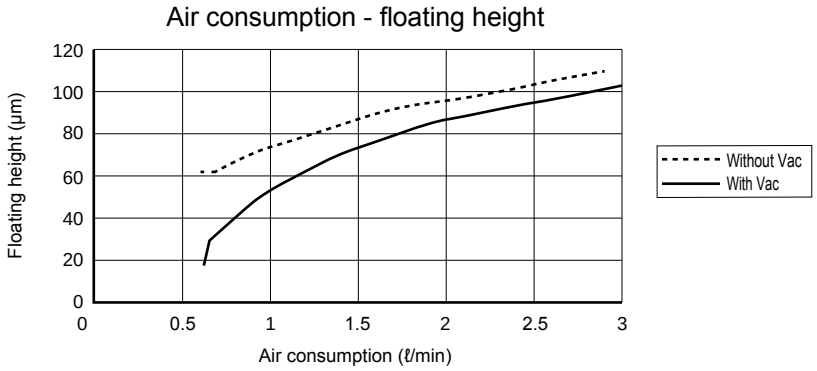

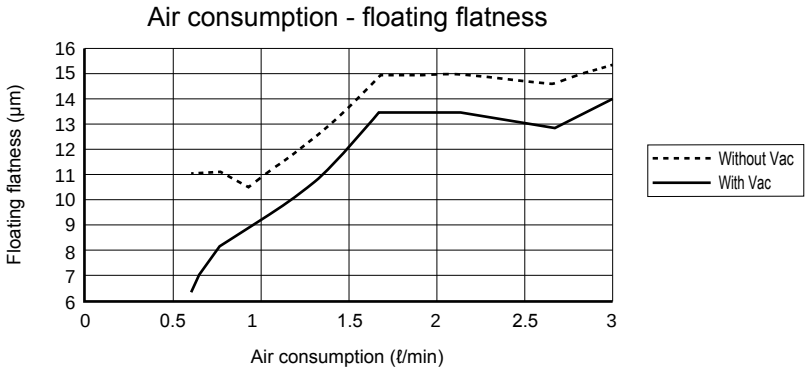

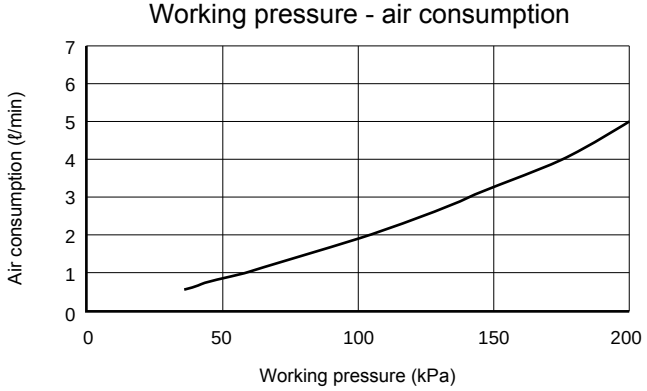

2 Floating flatness 2

[Measuring method]

(1) The glass surface is the reference point (zero point) when the supply air pressure is zero.
(2) Let the glass float and measure the displacement.

Condition 1: Status where the glass is larger than precision floating stage by 15 mm

Glass size : t0.7 × 280 × 182
Floating stage layout status : No clearance between stages

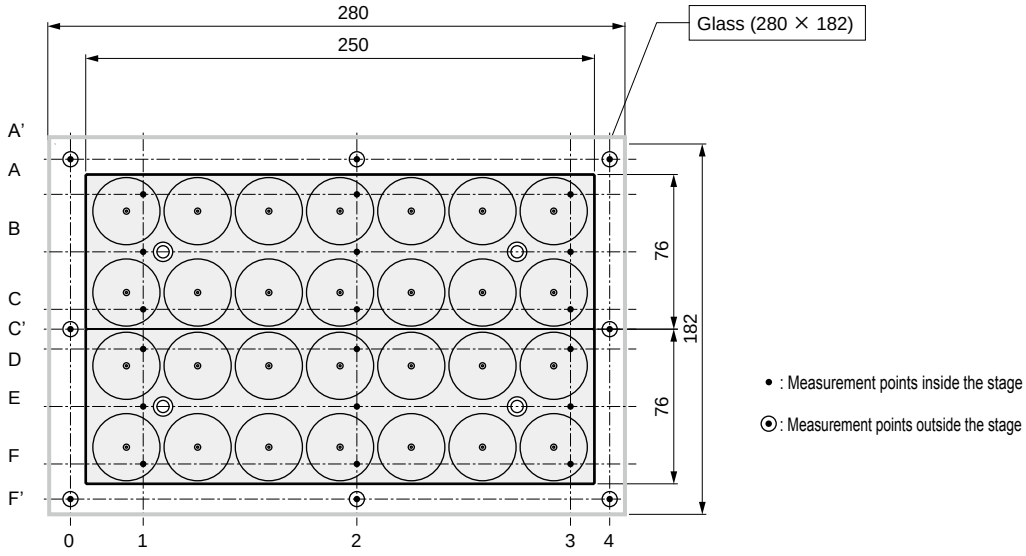

[Results]

	0	1	2	3	4
A'	18.0		26.5		23.0
A		25.5	25.9	22.1	
B		25.0	27.2	24.8	
C		25.8	27.9	26.2	
C'	21.8				25.0
D		26.1	24.9	27.9	
E		23.8	25.6	23.6	
F		20.4	24.7	20.0	
F'	9.7		20.0		13.9

(Unit: μm)

Target floating height	(μm)	20
Positive pressure	(kPa)	50
Positive pressure flow rate	(ℓ/min)	1.6
Negative pressure flow rate	(ℓ/min)	6.5
Max. floating height	(μm)	27.9
Min. floating height	(μm)	20.0
Average floating height	(μm)	24.9
Floating flatness	(μm)	7.9

* Measurement points outside the floating stage are omitted

3 Floating flatness 3

[Measuring method]

(1) The glass surface is the reference point (zero point) when the supply air pressure is zero.
(2) Let the glass float and measure the displacement.

Condition 2: Status where the clearance between stages is 23 mm with the status of Condition 1

Glass size : t0.7 × 280 × 205
Floating stage layout status : clearance between stages of 23 mm

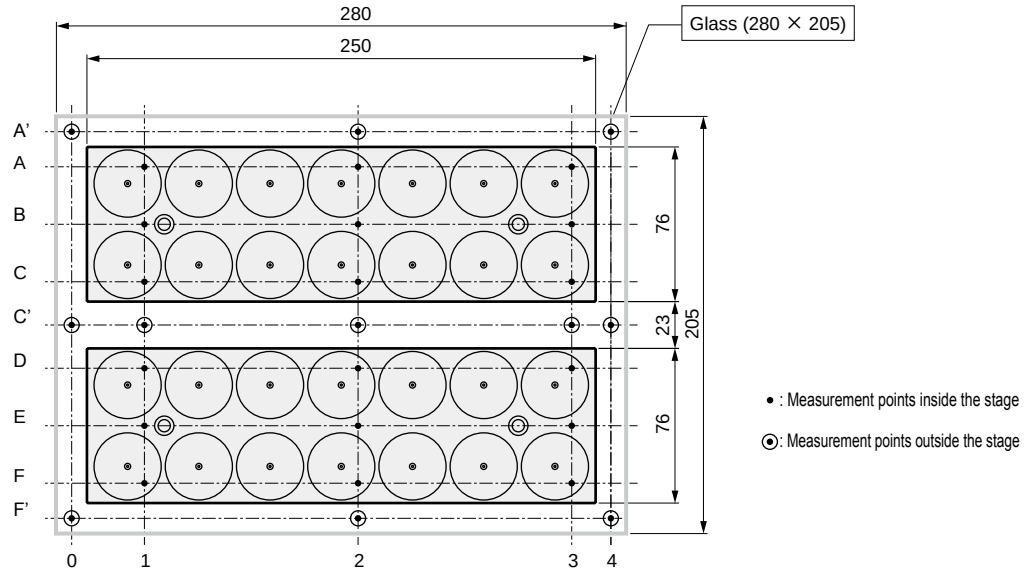

[Results]

	0	1	2	3	4
A'	18.1		22.7		18.9
A		26.8	26.9	23.5	
B		26.0	27.2	25.0	
C		25.6	27.0	26.8	
C'	21.8	23.9	26.0	25.8	24.3
D		25.4	28.4	27.7	
E		23.7	25.3	25.0	
F		22.3	23.0	22.7	
F'	14.8		18.3		12.8

(Unit: µm)

Target floating height	(µm)	20
Positive pressure	(kPa)	50
Positive pressure flow rate	(ℓ/min)	1.6
Negative pressure flow rate	(ℓ/min)	6.3
Max. floating height	(µm)	28.4
Min. floating height	(µm)	22.3
Average floating height	(µm)	25.5
Floating flatness	(µm)	6.1

* Measurement points outside the floating stage are omitted

4 Dust generation rate

[Measuring method]

(1) Set a test sample in an acrylic chamber.
(2) Supply air of 200 kPa (approx. 5 ℓ/min).
(3) Measure the number of particles when air flows continuously.

[Test circuit]

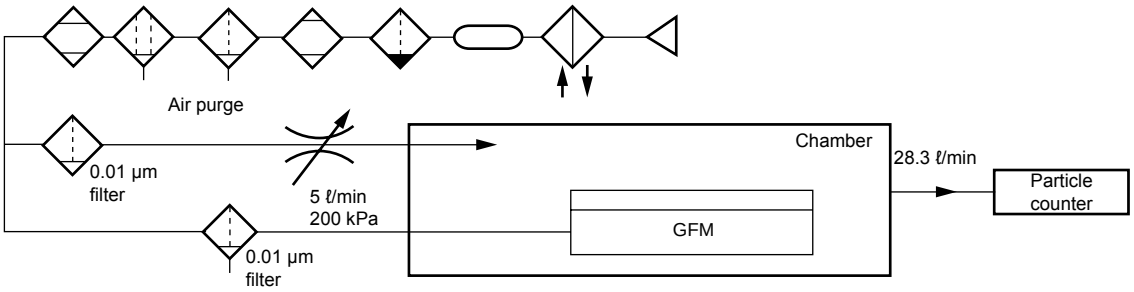

[Measuring instrument]

Particle counter : Laser dust monitor
Min. measurable particle diameter : 0.1 μm
Intake : 28.3 ℓ/min

[Results]

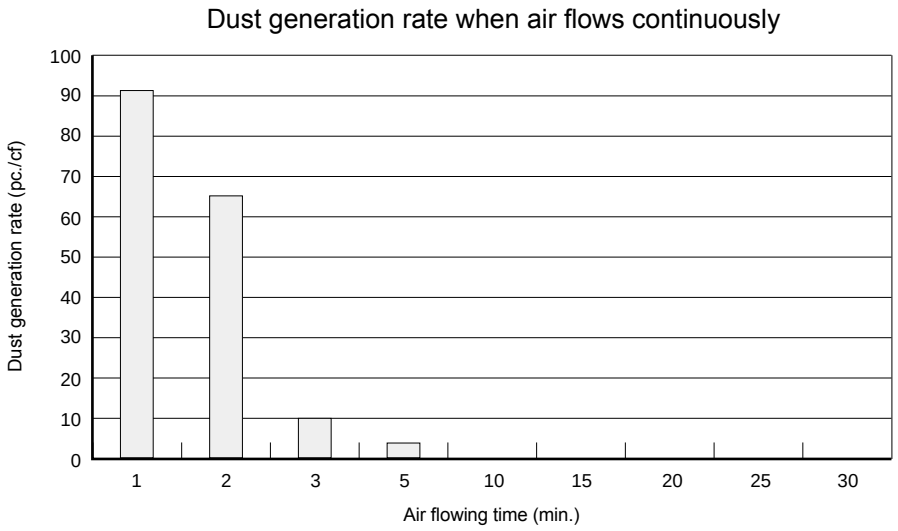

Note: The dust generation rate includes particles with diameter of 0.5 μm or more.

5 Static electricity change

[Measuring method]

(1) Mount the sensor head on the center of glass.
(2) Measure the indicated value of static electricity (voltage) when air is supplied.

[Test circuit]

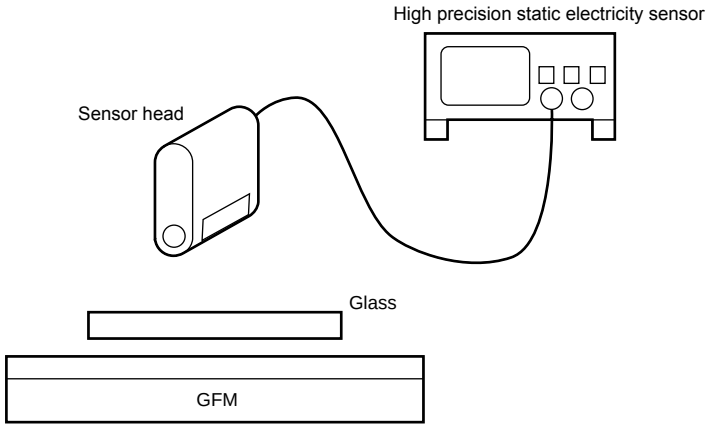

[Measuring instrument]

Static electricity measurement: High-precision static electricity measuring device (contactless)

[Results]

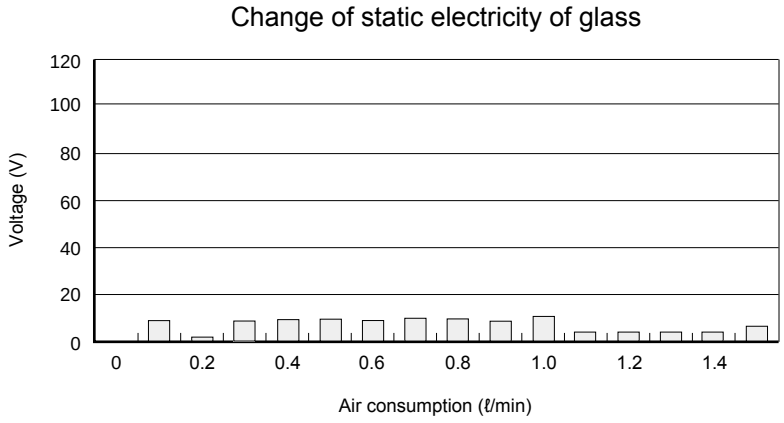

Floating system related products

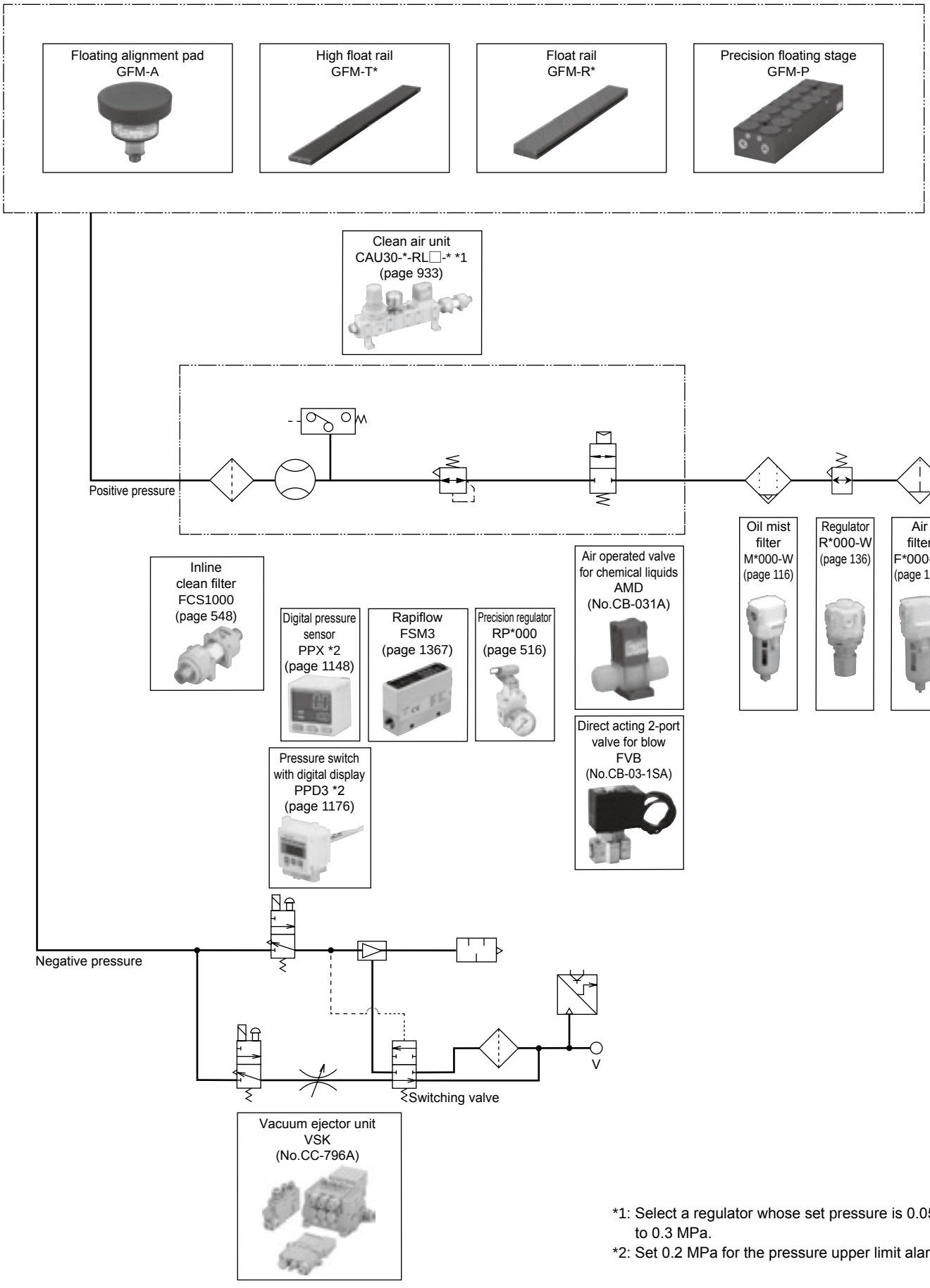

*1: Select a regulator whose set pressure is 0.05 to 0.3 MPa.
*2: Set 0.2 MPa for the pressure upper limit alarm.

MEMO

Safety precautions

Safety Precautions

Be sure to read this section before use.
Refer to Intro Page 63 for precautions for general pneumatic components.

Product-specific cautions: Glass float module GFM Series

Design/selection

1. Common

⚠WARNING

■ During transport/storage, keep the environment temperature within the range of the storage ambient temperature (-10°C to 60°C).
The transport/storage in the place that is out of the range may cause breakage, malfunction or deterioration of performance/durability of the product.
For better use of the product, transporting and storing at around 25 °C is ideal.

■ Always use within the product specifications.
The porous material could be damaged and porous surface could deteriorate when used at conditions exceeding the specified range.

■ Avoid using outdoors in areas with high levels of dust or direct sunlight.
Do not use in areas containing corrosive or flammable gases. Never suction these up.

■ This product is used for compressed air. Do not use a different fluid.

■ Never modify or additionally machine this product.
The processing strain, etc., could cause deterioration of accuracy/durability of the product.

■ The floating workpiece can be moved with minimal force.
To prevent bodily injury or damage on workpiece/device/equipment that could be caused by transport or overrun of the workpiece, properly incorporate the support/retainer/fixation parts and stopper.

■ Consider the possibility that the pressure may be decreased by the electrical power failure or failure of the power source.
If it is possible that lack of flotation could cause bodily injury or damage on workpiece/device/equipment, incorporate the safety device for this purpose.
If it is possible that lack of suction could cause bodily injury or damage to workpieces/devices/equipment, incorporate a safety device for this purpose.

■ Consider the behavior at emergency stop.
If the safety device is activated at emergency stop or during a system failure in order to stop the power source/machine, etc., design the system so that physical harm or damage to the workpiece/device/equipment does not occur.

■ Consider the behavior when restarting after emergency stop or abnormal stop.
Design the system so that physical harm or damage to the workpiece/device/equipment does not occur when restarting.

■ Perform piping with a sufficient effective cross-sectional area.
Piping must be designed to suit the air consumption volume. Make the effective cross-sectional area of the tube, pipe fitting, valve, etc., wide enough to reduce pressure drop. The lack of flotation or lack of suction induced by the pressure drop could cause bodily injury or damage to workpieces/devices/equipment.

■ Do not use spiral piping.
Avoid spiral piping both at the inlet and at the vacuum end, and perform piping with the minimum linear distance to reduce pressure drop.
The lack of flotation or lack of suction induced by the pressure drop could cause bodily injury or damage to workpieces/devices/equipment.

⚠CAUTION

■ Use dry, clean compressed air [Class 1.1.1 to 1.6.2] (20,000/m^3 or less solid particles 0.1 to 0.5 µm, pressure dew point +10˚C or less, oil concentration 0.1 mg/m^3 or less).
(Class is based on JIS B 8392-1:2012 compressed air quality class.)
[It is recommended to use the CKD Super dryer (High polymer membrane air dryer) SD Series or CKD inline filter FCS.]

[Recommended device]

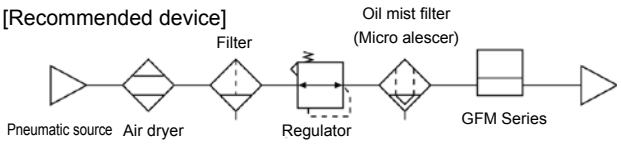

■ When using this product in a cold climate, take the necessary measures to prevent freezing.
The foreign matter or oil contained in the compressed air may clog the porous material and cause failure/improper operation.

■ When there is a heat source in the surroundings, insulate the product.
Radiant heat could cause the product temperature to rise and exceed the working ambient temperature range. Insulate the product with a cover, etc.

■ Avoid using this product where vibration and impact are present.
This could cause failure/improper operation.

■ Wiping the floating surface of the product with cloth/ paper, touching with a hand or contacting with glass will cause black adhesion (color transfer). In this phenomenon, the surface layer of the porous material peels off or flakes off when it is subjected to a physical load; take care, as this may lead to particle generation.
(Excluding GFM-T)

Design/selection

2. Swinging GFM-A

⚠ WARNING

■ Take care when swiveling operation is performed with a screw-fixed pad.
The screws may loosen due to turning, causing problems and leading to dangerous conditions.

■ When performing suction transport, consider the acceleration, impact and wind pressure.
The adsorbed object may come off during transport.

⚠ CAUTION

■ For the normal oscillating operation, set the load value to 1 to 5 N.
The setting of quantity and the setting layout are important.
When the applied load value is 1 N or less, air could blow out from the body side or bottom surfaces.
When this value is 5 N or more, the tracing mechanism may not function.

3. Rail GFM-R*/Precision GFM-P

⚠ CAUTION

■ Separately prepare brackets for piping connection that meet the mounting dimensions of your equipment.
We offer separate bracket kits. Contact CKD for details.

■ Because the threaded part of the mounting section of this product penetrates the air path, air leakage may occur from the threaded part.
[GFM-R Series only]
The leakage can be prevented by using the gasket for thread.

Mounting, installation and adjustment

1. Common

⚠ WARNING

■ Before starting operation, check for loosening, problems with the load and the fitting connections.

■ Start operation after confirming that devices operate correctly.
After installing, repairing, or modifying the product, conduct a function inspection and confirm that the product is correctly installed.

■ Confirm that there is no machine interference and that the actuation system is normal.
To prevent the interference between the workpiece and this product during transport of the workpiece, take necessary safety measures on the equipment system.

■ Avoid using outdoors in areas with high levels of dust or direct sunlight.
Do not use in areas containing corrosive or flammable gases. Never suction these up.

■ Never modify or additionally machine this product.
The product damage induced by this could cause bodily injury or damage on workpiece/device/equipment.

■ Supply air to the equipment system after ensuring that personnel have evacuated.

⚠ CAUTION

■ Do not remove the product from the package until just before piping.
Foreign matter could enter from the piping port and cause faults or malfunctions.

■ Before installation of the piping, flush the piping to remove all foreign matter and cutting chips.

■ Be sure to read the instruction manual carefully.
Fully understand contents before starting use.

■ Remove any foreign matter from the mounting surface or mounting section by wiping it with ethanol or blowing with air, etc.

■ Store the product so that foreign matter cannot enter from the screws on the end, holes on the side surfaces, or clearance under the body. For these reasons, do not remove the product from the package until just before installation/piping to the equipment.
If foreign matter enters, this could cause failure/improper operation.

■ Flush the piping to be connected to this product immediately prior to connection.
Any foreign matter must be removed so that it does not enter the pneumatic component during piping.

2. Swinging GFM-A

⚠ WARNING

■ The body (porous material surface) of this product is tilted. To prevent interference with the workpiece, take the necessary safety measures for the equipment system so that this product is placed at a distance from the workpiece before and after floating/suctioning the workpiece.

⚠ CAUTION

■ When securing the product, use an M5 thread for the piping connection of the lower end of the product and use proper torque to tighten the piping.
When tightening, be sure to use the width across flats.
[Tightening torque: 1.0 to 1.5 (N·m)]
In addition, after mounting this product, reconfirm that the torque is appropriate after the equipment has been installed.

■ The body (porous material surface) of this product moves slightly up and down for structural reasons in accordance with the ON/OFF of supplied air.
For operations before and after floating/suctioning the workpiece, take the appropriate measures for the equipment system.

■ When tightening, be sure to use the width across flats.
(width across flats dimensions: 5.9 to 6.0 mm)
Using a different section could cause structural damage.

Mounting, installation and adjustment

3. High float GFM-T, Rail GFM-R*, Precision GFM-P

⚠ WARNING

■ Because the carbon graphite used for this product is a brittle material, it may be damaged if it is subjected to impact, causing debris to fly or fall off. This may cause physical harm.
(Excluding GFM-T)

■ Do not dent or scratch the mounting surface of the body.
The flatness of the mounting surface will worsen and may cause deterioration in floating performance.

■ Do not apply strong impact or excessive moment when mounting the product.
Applying excessive moment may cause deformation of the body, and could cause a deterioration in floating performance.

⚠ CAUTION

■ Use proper torque to tighten the pipes when using the M thread of the product.

Port thread	Tightening torque (N·m)
M4	0.6 to 0.8
M5	1.0 to 1.5

■ When connecting the piping to this product, do not use fittings which are classified as small fittings (barbed fitting, clamp fitting). This may cause a small effective cross-sectional area, and a sufficient flow rate may not be obtained.

■ Before installing, leave this product in the working environment until the temperature of the product has adjusted to the surroundings (approx. 24 hours).
Installing the product before temperature is adjusted to the surroundings may damage shape accuracy due to thermal expansion or contraction.

4. Rail GFM-R*

⚠ CAUTION

■ Because the threaded part of the mounting section of this product penetrates the air path, use a gasket for the thread.

5. Precision GFM-P

⚠ WARNING

■ Make the flatness of the mounting surface 0.01 mm or less.
The low flatness of the standard surface could cause deterioration of floating performance.

Use/maintenance

1. Common

⚠WARNING

■ Refer to the instruction manual and conduct careful maintenance and inspection.
Incorrect handling could result in device or system damage or operation faults.

■ This product is used for compressed air. Do not use a different fluid.

■ Be sure to discharge any residual pressure before installing or removing the product.

■ When starting up the system after it has not been in use for a long period of time, perform test runs for normal operation, and then switch to full operation.

⚠CAUTION

■ Conduct daily inspections and regular inspections to ensure that maintenance control is done correctly.
If maintenance is not sufficient, the product's functions could deteriorate markedly and lead to a shortened service life, faults and accidents.

■ Stop use if leakage increases or if the device does not function correctly.
After installing, repairing, or modifying the product, conduct a function inspection and confirm that the product is correctly installed.

■ Be sure to discharge any residual pressure before installing or removing the product.

■ If the product is not going to be in use over a long period of time, store it in a polyethylene bag, etc., in a dry, clean environment. If the product is reused, do not remove it from the package until just before installation/piping to the equipment.
If foreign matter enters, this could cause failure/improper operation.

■ Perform the following periodic inspection once or twice a year to ensure that the product is achieving optimal functionality.
(1) Check for leakage to the outside (loosening or deformation of gasket)
(2) Decreased floating performance
(3) Check for exterior faults (scratches, chips on the porous plate, surface contamination)

2. Swinging GFM-A

⚠WARNING

■ Take care when swiveling operation is performed by suction transport, etc.
This product is fixed with a screw. The screws may loosen due to turning, causing problems and leading to dangerous conditions.

■ When performing suction transport, consider the acceleration, impact and wind pressure.
The adsorbed object may come off during transport.

■ To prevent interference between the workpiece tip and this product during transport of the workpiece, take the necessary safety measures for the equipment system.
The workpiece or this product could break.
To prevent interference with the workpiece, take the necessary safety measures for the equipment system so that this product is placed at a distance from the workpiece before and after floating/suctioning the workpiece.

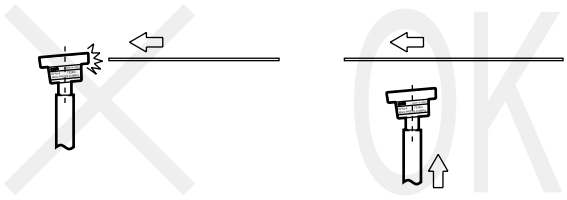

⚠CAUTION

■ The body (porous material surface) of this product moves slightly up and down for structural reasons in accordance with the ON/OFF of supplied air.
For operations before and after floating/suctioning the workpiece, take the appropriate measures for the equipment system.

3. Rail GFM-R*, Precision GFM-P

⚠WARNING

■ Because the carbon graphite used for this product is a brittle material, it may be damaged if it is subjected to impact, causing debris to fly or fall off. This may cause physical harm.

Precise suction plate

PVP

■ **Precision components**

Overview

This precise suction plate uses CKD's original sintered multi-porous fluorine resin with 40% porosity for the suction surface. Even extremely thin or soft workpieces are handled without suction damage, distortion, or deformation. A wide variety of workpieces can be processed with superb accuracy.

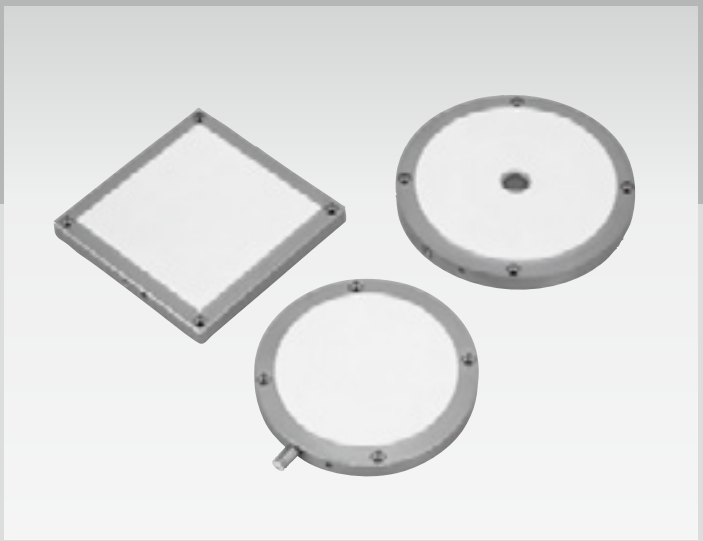

Features

· Highly accurate workpiece processing.
· Large suction force.
· Workpieces are not damaged.
· Three types of plate shapes are available.

CONTENTS

Product introduction	1108
● PVP	1110
⚠ Safety precautions	1118

Soft touch to workpiece, clean and high precise suction.

PVP Series, the precise suction plate made from sintered porous fluorine resin body. It does not damage delicate workpieces such as ultra thin and soft materials, nor cause deflection or deformation due to suctioning,and thus enables high precision treatment of various workpieces.

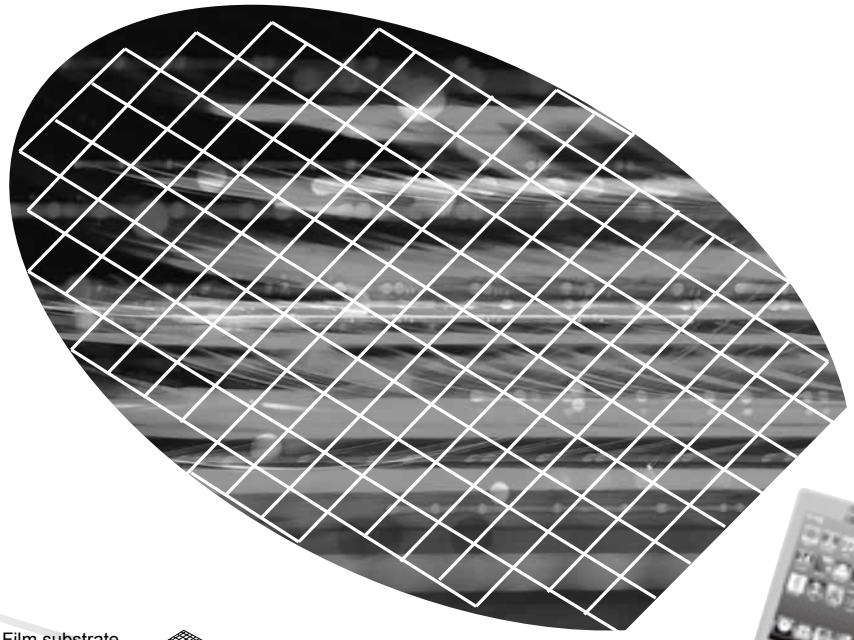

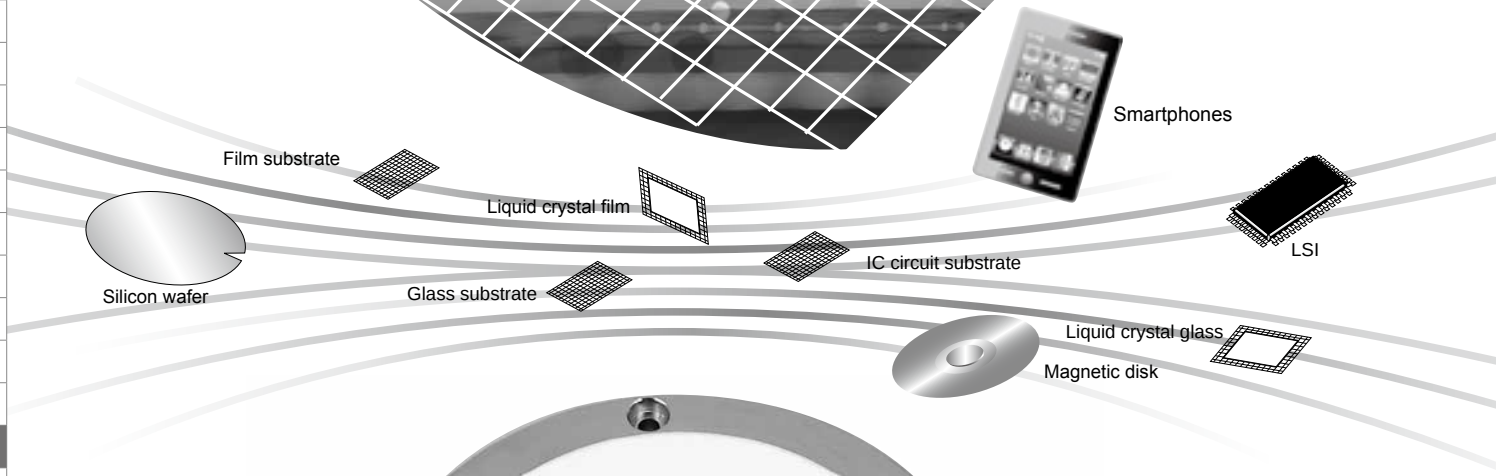

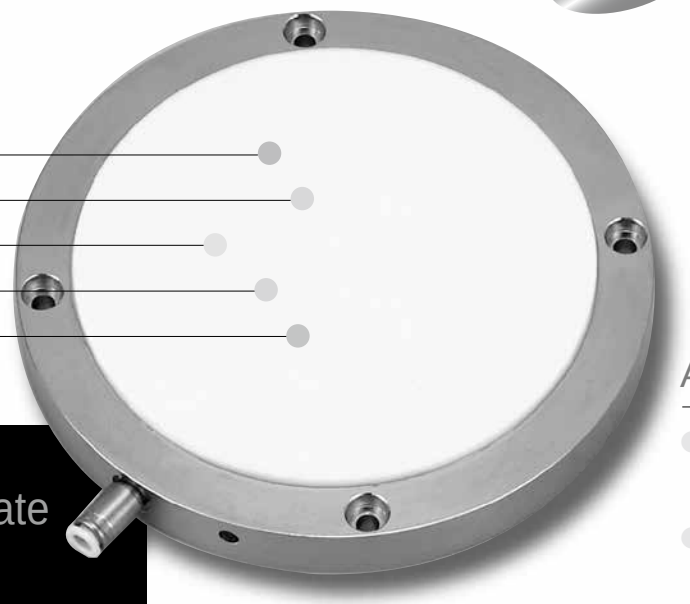

Applications

- Conveying, bonding, etc., of optical and magnetic disks
- Bonding, conveying, etc., of liquid crystal glass and film substrates
- Wafer spinner, polishing, conveying, etc.

Precise suction plate

PVP Series

CKD original sintered porous fluorine resin body with 40% porosity.
Perfect for high precision and highly advanced processes.

Highly accurate workpiece processing

Suction surface flatness: 2 μm, parallelism: 5 μm
(Specification values for R-36-18, C-50, S-50-50)
Enables high precision workpiece treatment by keeping the workpiece fixed securely.

Large suction force

Large suction force with 40% porosity enables suctioning with the entire surface.
Even if the suction force is large, it does not deform ultra thin workpieces during vacuuming.

Porous fluorine resin

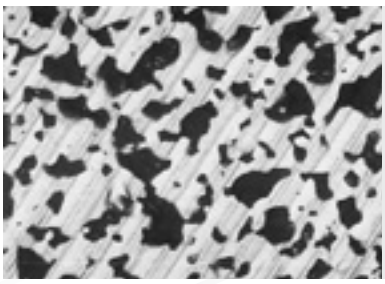

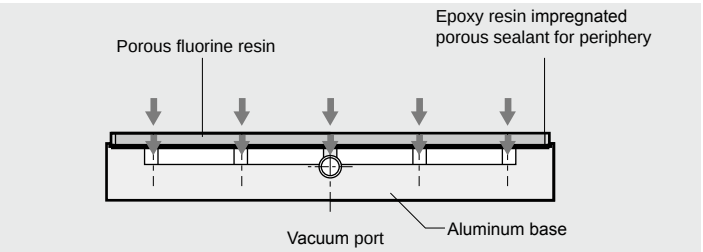

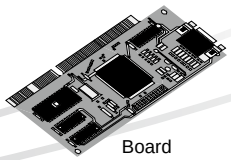

Board

Workpieces are not damaged

Soft suction surface of Shore D60 hardness does not damage a workpiece.

Lightweight

Consists of the porous fluorine resin plate (apparent specific gravity: 1.3) and the aluminum base (specific gravity: 2.7).
The light body can help reduce driving force.

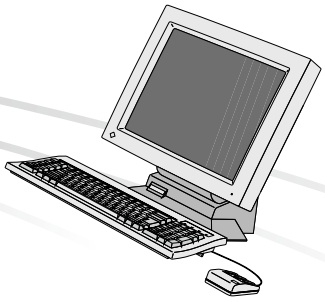

LCD

Antistatic (Option)

Antistatic agent coated on the porous fluorine resin plate can prevent static electricity that may damage workpieces.

Black is available

Black without scratches and glares is also available.

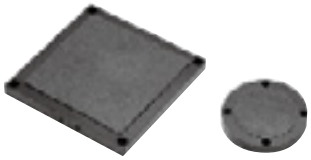

A wide range of plate shapes

In addition to the three standard shapes, any other shape of plate can be manufactured as you desire.

● Standard

PVP-R
(1) Donut shaped

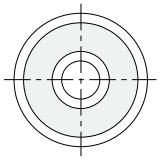

Disc, etc.

PVP-C
(2) Round shape

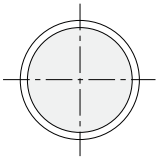

Semiconductor, silicon wafer, etc.

PVP-S
(3) Square shape

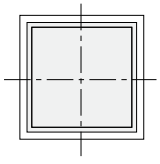

Plastic substrate, etc.

● Examples of custom-made shapes

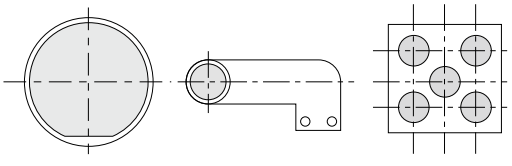

Wafer shape | For robot hand | Multi-point suction

· Contact CKD for custom-made shapes.

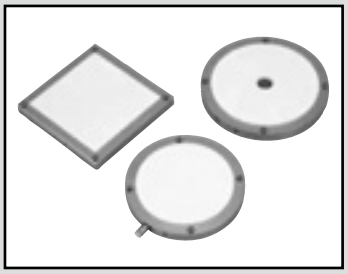

Precise suction plate

PVP Series

RoHS

Specifications

Item			PVP-R-36-18 PVP-C-50 PVP-S-50-50	PVP-R-85-27 PVP-R-118-18 PVP-C-75 PVP-C-100 PVP-C-113 PVP-C-138 PVP-S-100-100	PVP-C-187 PVP-S-150-150 PVP-S-200-250
Product	Suction surface μm (*1)	Flatness	2	3	4
		Parallelism	5	10	15
	Flatness of reference surface	μm	10	10	10
	Air leakage volume	ℓ/min(ANR)	0.4	0.6	1
	Vacuum differential pressure	kPa (*2)	40 (≈5.9 psi, 0.4 bar) or more		
	Working pressurization	MPa	0.2 (≈29 psi, 2 bar) or less (clean air)		
	Ambient temperature	°C	5 (41°F) to 40 (104°F)		
	Ambient humidity	%RH (*3)	65 or less		
Porous material	Material		Polychlorotrifluoroethylene		
	Porosity	%	40±5		
	Shore D hardness degree	°	60±15		
Base material	Material		Corrosion-resistant aluminum alloy		
	Surface-treated	(*4)	None		

*1: This accuracy is the measurement value left as is for 24 hours in the constant temperature room at 23°C.
Accuracy may deviate from that specified at a temperature other than 23°C.
The value is measured by placing the product without load on a table, measuring straightness in two or more directions and using the maximum value.
This is not the usual flatness measurement method, but has been used because multi-porous material has indentations.
*2: Indicates the vacuum source pressure drop when a workpiece is vacuumed onto the entire multiporous surface.
*3: In humidity exceeding 65% RH, suction surface accuracy may deviate from the specified value.
*4: This product's body is made of corrosion-resistant aluminum alloy.
Surface treatment (alumite, electroless nickel plating, etc.) is made to order.

Suction area/weight table

Model No.	Suction area (cm^2)	Weight (g)
PVP-R-36-18	8	80
PVP-R-85-27	51	290
PVP-R-118-18	107	520
PVP-C-50	20	140
PVP-C-75	44	250
PVP-C-100	79	390
PVP-C-113	100	490
PVP-C-138	149	680
PVP-C-187	275	1,170
PVP-S-50-50	25	160
PVP-S-100-100	100	490
PVP-S-150-150	225	980
PVP-S-200-250	500	2,030

How to order

● How to order the round suction plate

PVP - C - 50 - CP - A

Round shape (A) (B) (C)

(A) Outer ø of porous material
50
75
100
113
138
187

(B) Vacuum port position	
Blank	Side surface port
CP	Back surface port

(C) Option	
Blank	None
A	Antistatic treatment

● How to order the square suction plate

PVP - S - 50-50 - CP - A

Square shape (A) (B) (C)

(A) Porous material-short side - Porous material-long side
50-50
100-100
150-150
200-250

(B) Vacuum port position	
Blank	Side surface port
CP	Back surface port

(C) Option	
Blank	None
A	Antistatic treatment

● How to order the donut shaped suction plate

PVP - R - 36-18 - CP - A

Donut shaped (A) (B) (C)

(A) Outer/Inner ø of porous material
36-18
85-27
118-18

(B) Vacuum port position	
Blank	Side surface port
CP	Back surface port

(C) Option	
Blank	None
A	Antistatic treatment

Internal structure and parts list

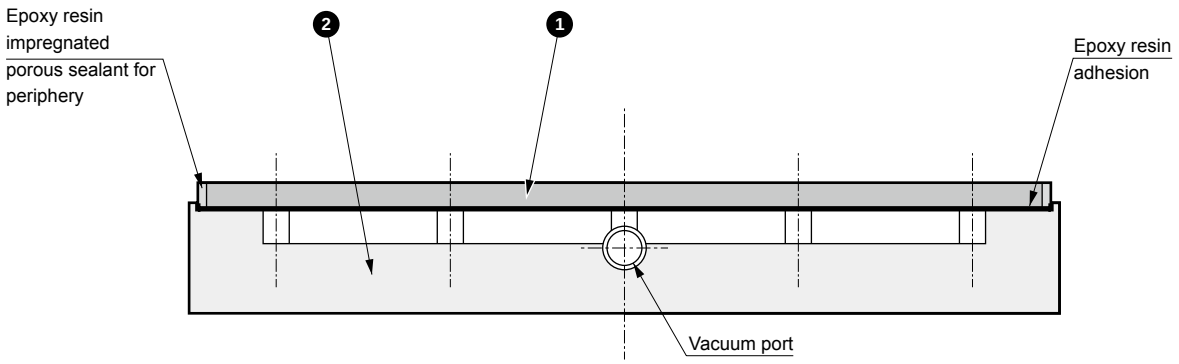

● Parts list

No.	Part name	Material
1	Porous material	Polychlorotrifluoroethylene
2	Base	Corrosion-resistant aluminum alloy

Dimensions

● PVP-C-*

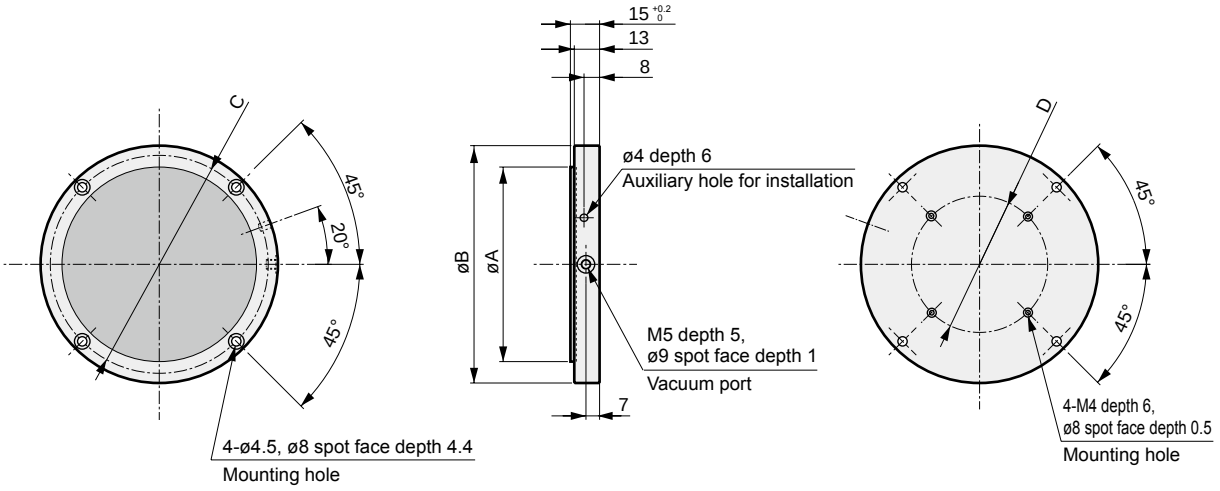

Model No.	A	B	C	D
PVP-C-50	50	72	62	30
PVP-C-75	75	97	87	50
PVP-C-100	100	122	112	70
PVP-C-113	113	135	125	70
PVP-C-138	138	160	150	90

● PVP-C-187

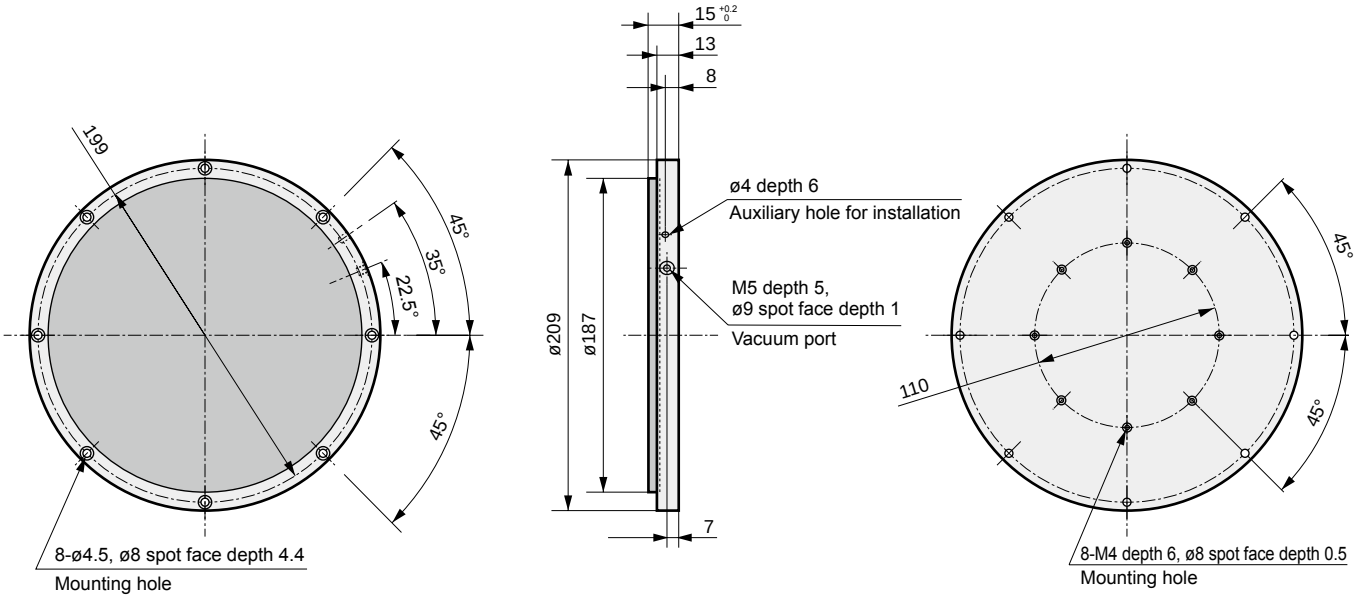

Dimensions

● PVP-S-*

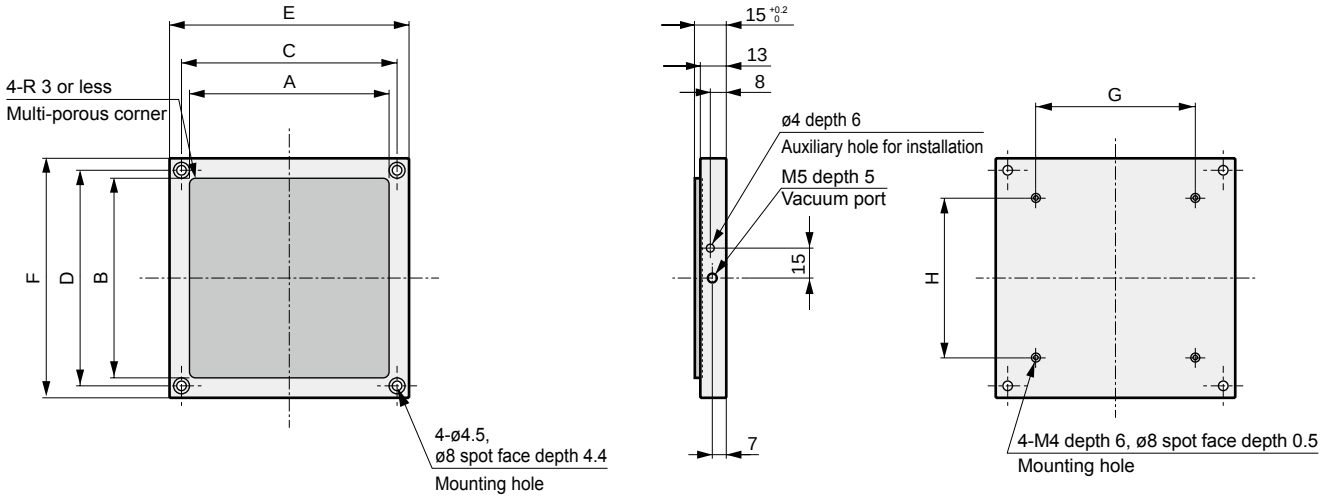

Model No.	A	B	C	D	E	F	G	H
PVP-S-50-50	50	50	58	58	70	70	40	40
PVP-S-100-100	100	100	108	108	120	120	80	80
PVP-S-150-150	150	150	158	158	170	170	120	120

● PVP-S-200-250

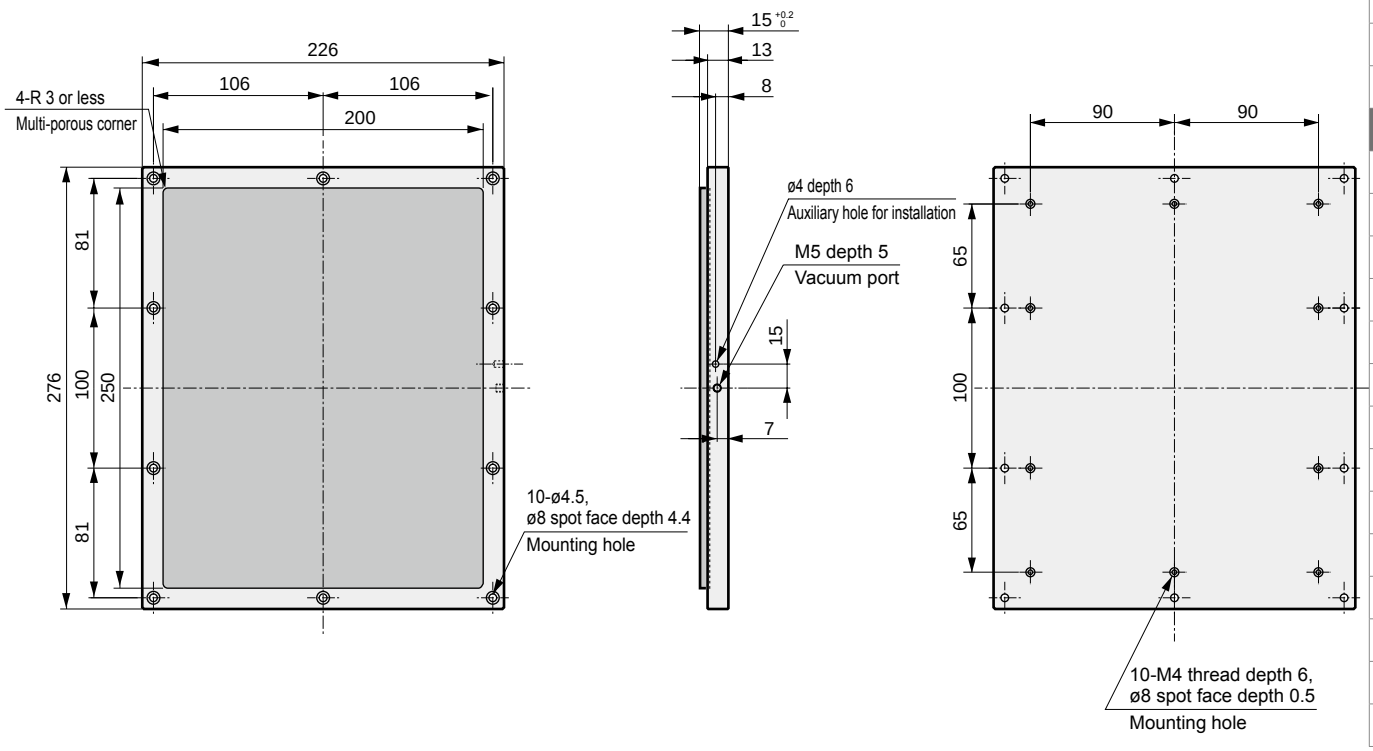

Dimensions

● PVP-R-*

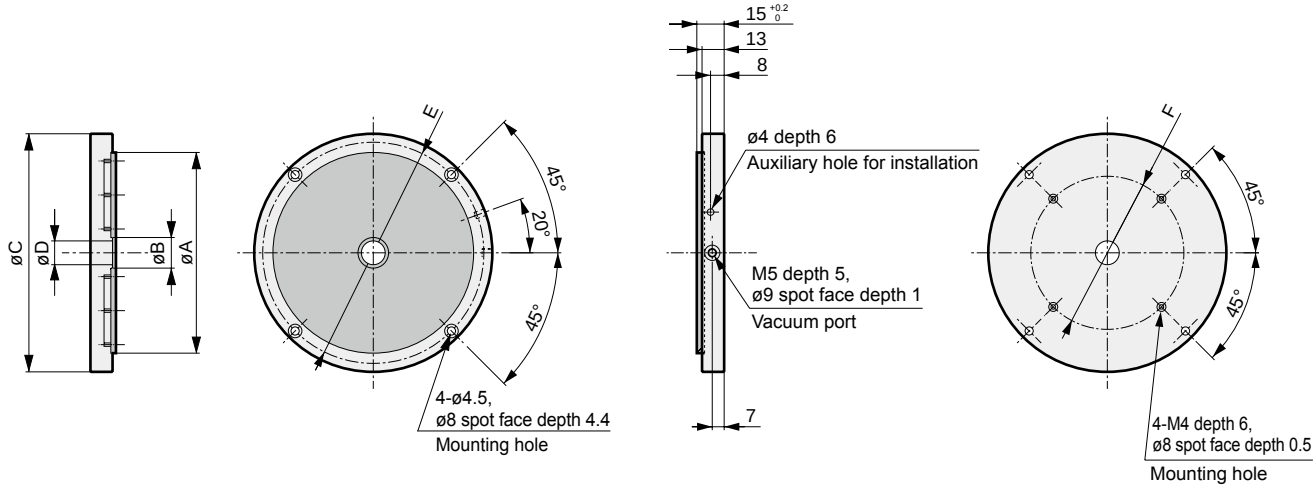

Model No.	A	B	C	D	E	F
PVP-R-36-18	36	18	58	16	48	30
PVP-R-85-27	85	27	107	25	97	60
PVP-R-118-18	118	18	140	16	130	90

Vacuum port position Back surface port (CP)

● PVP-C-*

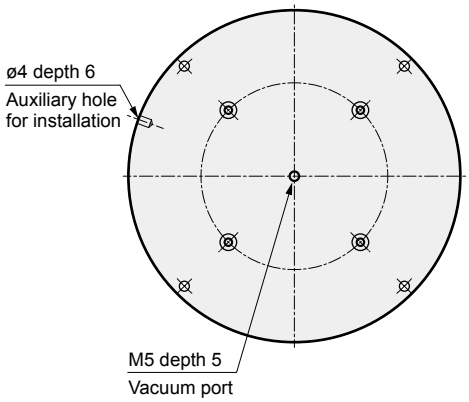

● PVP-C-187

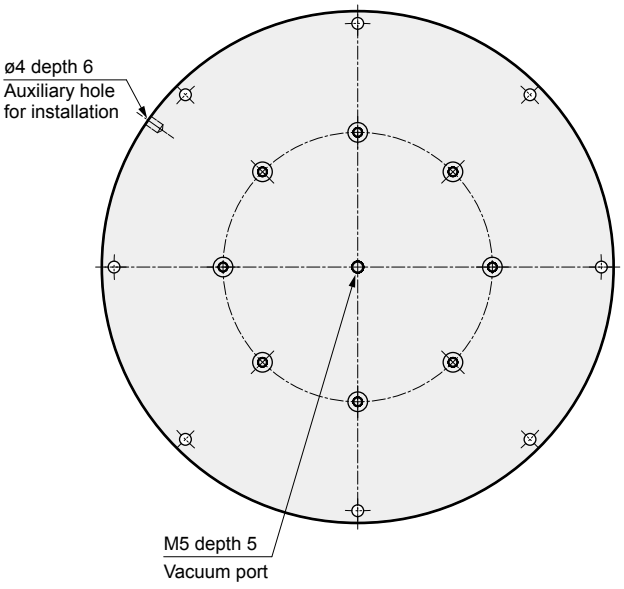

Dimensions

Vacuum port position Back surface port (CP)

● PVP-S-*

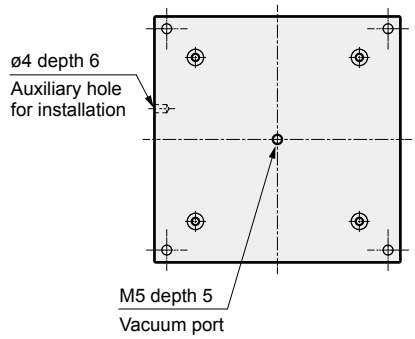

● PVP-S-200-250

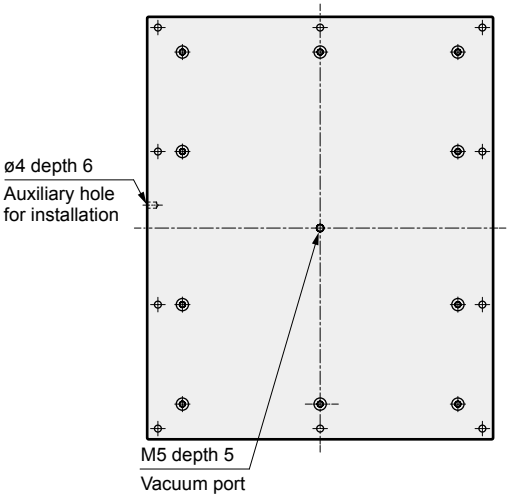

● PVP-R-*-18

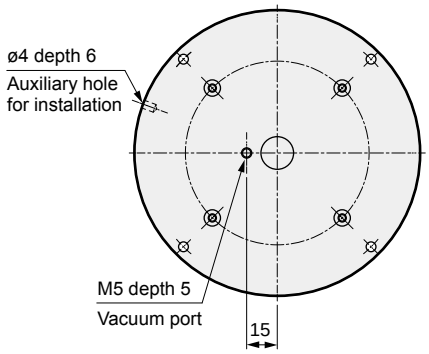

● PVP-R-85-27

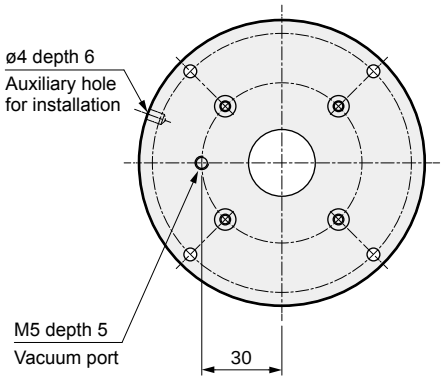

Technical data

● Vertical suction (reference data)

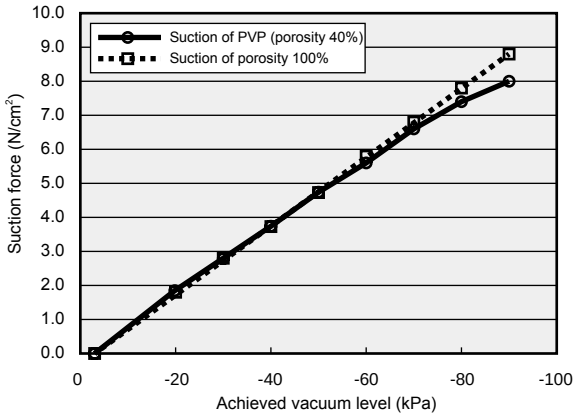

* Aluminum alloy conditions
Suction surface flatness: 1 µm or less
Surface roughness : Ry0.1 or less

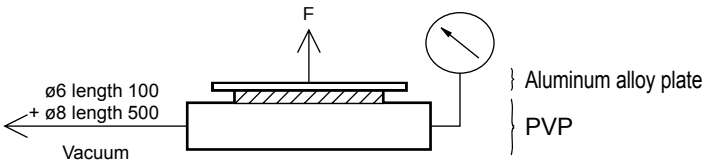

This data is reference data measured as above (PVP-S-50-50).
The minimum for vacuum achievement level is not zero because of piping resistance due to multi-porous material and piping.
Under conditions other than the above, suction could vary due to piping resistance, the shape of the part to be adsorbed, or surface roughness, etc.

Precise suction plate (black) PVP-B Series

Available as a made to order. Contact CKD for details.

Made to order

No more scratches, no more reflections - black suction plate!

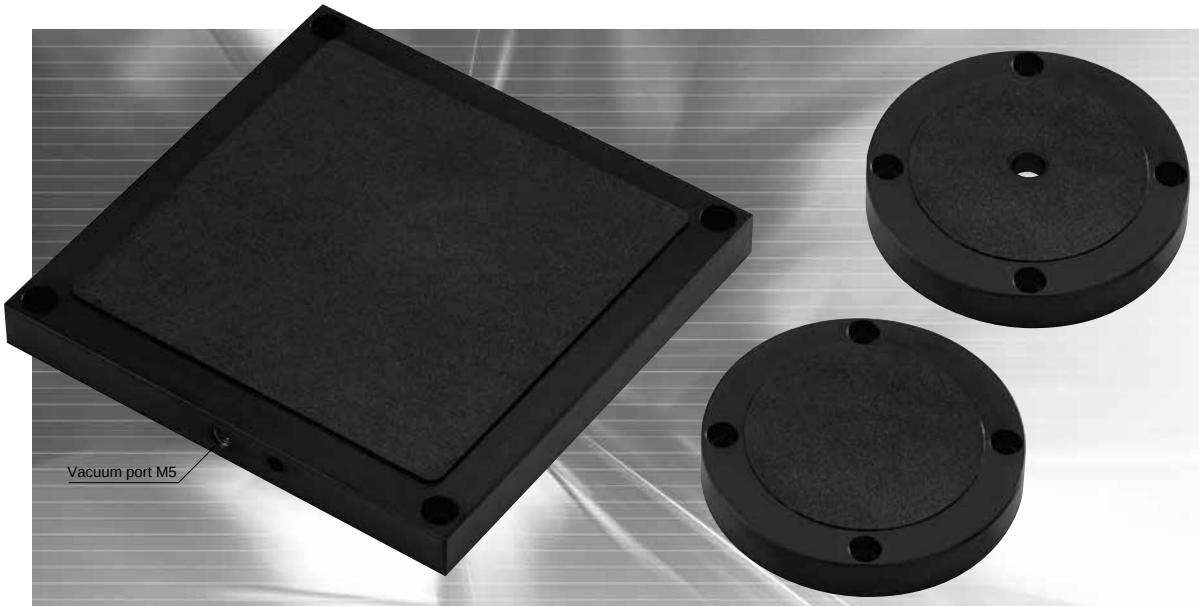

Black porous plate

No glares

The black color does not reflect light and thus enables inspection processes that are not possible with a conventional white porous plate.

Conductive resin

Soft touch on workpiece

The conductive resin suction plate does not generate static electricity nor damage a workpiece during suctioning.

Dividable suction area (Example of customization)

The suction area can be divided to handle various kinds of workpiece

The optimum section of the divided PVP suction area can be used according to the workpiece.

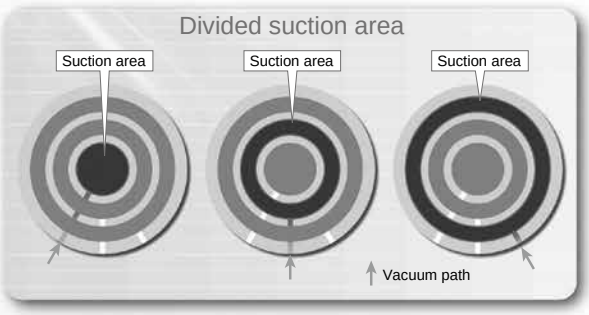

Porosity 40% and flatness 5 μm/10 mm.
Shore D100 suction surface hardness without damaging workpieces is suitable for various applications.

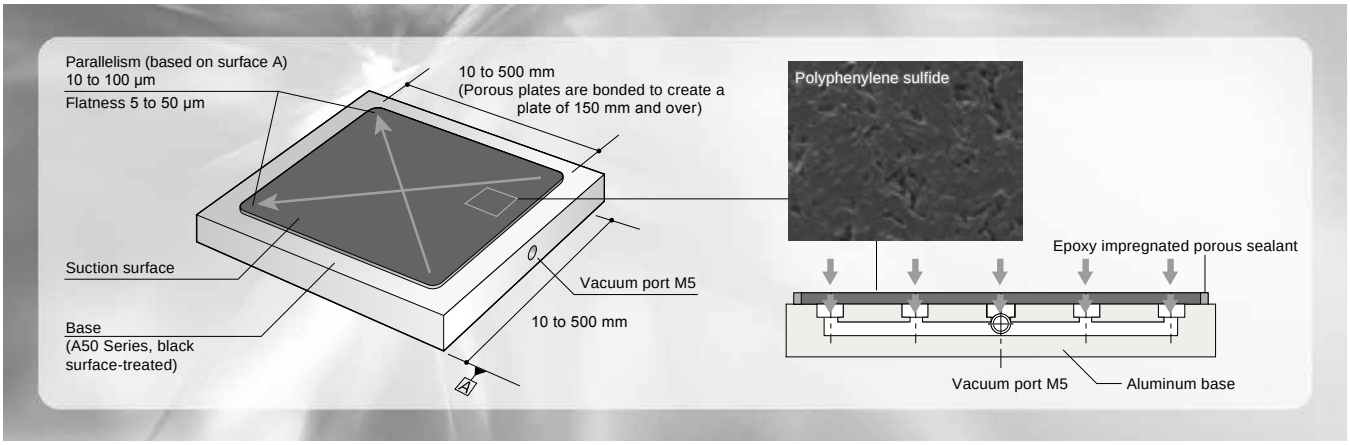

Applications of PVP

Perfect for suctioning and conveying fragile workpieces such as thin wafer and film.

- ◆ Suctioning to fix workpieces in the semiconductor manufacturing process (for bonding)
- ◆ Inspection equipment
- ◆ Conveying workpieces
- ◆ Assembling parts

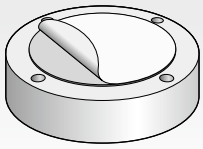
Bonding/peeling a film

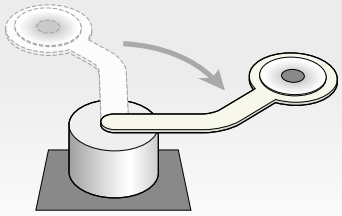
Robot hand

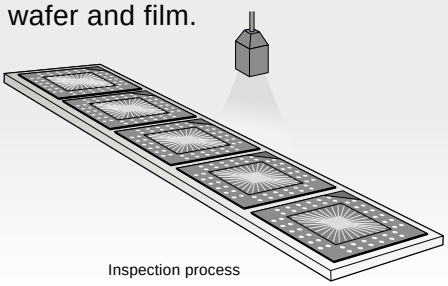
Inspection process

Main specifications

Product	Suction surface accuracy	Flatness	5 to 50 μm
		Parallelism	10 to 100 μm
	Vacuum differential pressure		40 kPa and over (when vacuum source is -90 kPa)
Porous material	Material		With polyphenylene sulfide (PPS) carbon fiber *
	Porosity		40±5%
	Hardness (shore)		100 or less
Base material	Material		Corrosion proof aluminum alloy
	Surface treatment		Black surface-treated

* As carbon fiber is exposed on the surface, powder of the workpiece may adhere to it, or some dirt or dust may be observed on it when it is rubbed strongly.

Safety Precautions

Be sure to read this section before use.
Refer to Intro Page 63 for precautions for general pneumatic components.

Design/selection

⚠WARNING

■ If dropping a workpiece when using a system with a precise suction plate could be dangerous, provide a locking mechanism for safety.

■ Do not use the product in areas containing corrosive or flammable gases.
Never suction these up.

■ Consider the behavior at emergency stop.
If the safety device is activated at emergency stop or during a system failure in order to stop the power source/machine, etc., design the system so that physical harm or damage to the workpiece/device/equipment does not occur.

■ Be sure to use the product within the specified range (5 to 40˚C, 0.2 MPa or less).
The multi-porous layer could peel off and generate corrosive gases when used at a pressure or temperature exceeding the specified range.

■ Consider the behavior when restarting after emergency stop or abnormal stop.
Design the system so that physical harm or damage to the workpiece/device/equipment does not occur when restarting.

⚠CAUTION

■ Confirm before use that the product will withstand the working environment.
Avoid use in environments where functional damage may occur, such as those with high levels of dust, where processes are performed resulting in dust being generated, chemical liquids, environments containing chemicals, vibration, humidity, moisture, gas atmospheres, or ozone-generating environments.

■ Use the product within the specified humidity (65% RH or less). Use outside the specified range could adversely affect suction surface accuracy.

■ Suction conditions vary with the product, piping, workpiece, and working environment.
When selecting a vacuum generator, consider the maximum vacuum, suction flow rate, and response time.

■ Use dry, clean compressed air [Class 1.6.2] (solid particles 0.1 µm, pressure dew point 10˚C, oil content 0.1 mg/m^3) when purging with air.
(Class is based on JIS B 8392-1:2012 compressed air quality class.)
[Recommended circuit]

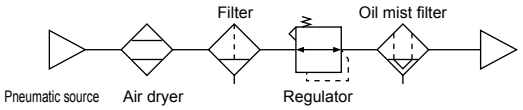

■ Do not use a spiral hose.
Using a spiral hose could increase piping resistance and lead to malfunctions such as delays in vacuum achievement times and decreased suction.

■ Note the following when connecting more than one precise suction plate to one vacuum generator.
● If one precise suction plate leaks, vacuum will drop and cause suction errors.
● Piping between the vacuum generator and branch must be wider than the piping between the branch and suction pad.

■ When using this product in a cold climate, take the necessary measures to prevent freezing.
The foreign matter or oil contained in the compressed air may clog the porous material and cause failure/improper operation.

■ When there is a heat source in the surroundings, insulate the product.
Radiant heat could cause the product temperature to rise and exceed the ambient temperature range. Insulate the product with a cover, etc.

■ Avoid using this product where vibration and impact are present.
This could cause failure/improper operation.

Mounting, installation and adjustment

⚠CAUTION

■ If the workpiece is not adsorbed using the entire multi-porous surface, suction decreases. Consult with CKD in this case.

■ Use an M4 hexagon socket head cap screw when installing the product to the equipment. Fix in place with a tightening torque of 0.62 to 0.75 N·m.

■ To prevent foreign matter from entering the product, do not remove the product from the package until just before installation/piping to the equipment.
If foreign matter enters, this could cause failure/improper operation.

■ Do not remove the protective port seal until just before piping.

■ Wipe the device mounting surface with ethanol and remove any foreign matter by flushing with air blow.

Mounting, installation and adjustment

⚠CAUTION

■ If the product is not going to be in use over a long period of time, store it in a polyethylene bag, etc., in a dry, clean environment. If the product is reused, do not remove it from the package until just before installation/piping to the equipment.
If foreign matter enters, this could cause failure/improper operation.

■ Before starting operation, check for loosening, problems with the load and the fitting connections.

■ Be sure to read the instruction manual carefully.
Fully understand contents before starting use.

■ Start operation after confirming that devices operate correctly.
After installation, conduct a functional inspection and confirm that the product is correctly installed.

Use/maintenance

⚠CAUTION

■ Avoid using outdoors in areas with high levels of dust. Materials may deteriorate if exposed to direct sunlight. Dust may clog the multi-porous layer and reduce suction.

■ Do not use in applications in which pressures of 1.0 MPa or more are applied to the multi-porous surface.

■ Do not use in applications in which partial loads or impact are applied to the multi-porous surface.

■ Check that the surface on which the product is installed is not warped and that the required flatness is attained.
Warping or deflection could occur if the product is not fixed on a surface with the required flatness.

■ Do not apply additional processing to the product. Additional machining will void the product warranty.
Accuracy decreases due to machining distortion.

■ Note the following when installing the product in order to prevent a reduction in product accuracy and permanent deformation.

- Do not support the product at one point or lean the product against a wall.
  (Install the product on a flat surface such as a surface plate to avoid strain and deflection caused by product weight.)
- Do not tug on the product or expose it to sudden or strong impact.
  (The product scratches easily, so be sure to lift it when moving it.)
- Do not apply sudden or excessive impact.
  (Damage from impact adversely affects flatness accuracy. Protect the porous surface and sides when mounting and transporting the product.)
- Do not install the product immediately upon arrival.
  (Installing the product before temperature is adjusted to the surroundings may damage shape accuracy due to thermal expansion or contraction. Leave the product in the working environment for 24 hours before installing.)
- Check that the multi-porous surface is not exposed to coolant or dust.
  (The multi-porous surface is extremely hard to clean. Dirt cannot be removed once adhered.)

■ Be sure to discharge any residual pressure before installing or removing the product.

■ When starting up the system after it has not been in use for a long period of time, perform test runs for normal operation, and then transfer to full operation.

■ Perform the following periodic inspection once or twice a year to ensure that the product is achieving optimal functionality.
(1) Inspection for leakage to the exterior
(2) Decreased suction performance
(3) Check for exterior faults (scratches, chips on the porous plate, surface contamination)
When malfunctions occur, stop the operation and contact CKD's local sales office.

■ Start the vacuum generator after the workpiece makes contact with the multi-porous surface.
(This reduces environmental dust absorbed by the multi-porous surface and helps prevent contamination.)

■ The antistatic effect is reduced if the product is washed and depends on the working environment such as workpiece suction frequency. The product should be recoated if its effectiveness drops.
When performing coating, contact CKD's local sales office.

■ Conduct daily inspections and regular inspections to ensure that maintenance control is done correctly.
If maintenance is not sufficient, the product's functions could deteriorate markedly and lead to a shortened service life, faults and accidents.

■ Stop use if leakage increases or if the device does not function correctly.
After installing, repairing, or modifying the product, conduct a function inspection and confirm that the product is correctly installed.

Magnetic spring buffer

FBU2

■ **Precision components**

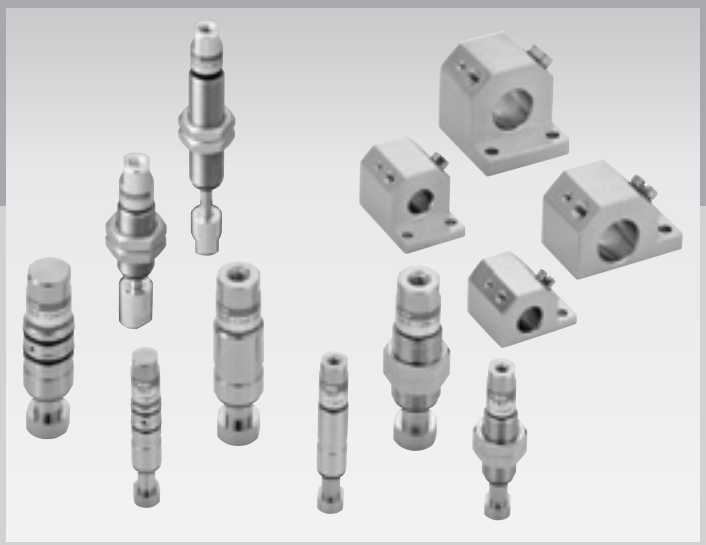

CONTENTS

Product introduction	1122
● Lightweight FBU2-7	1124
● Standard FBU2-12	1124
● General purpose FBU2-SU	1130
Technical data	1132
⚠ Safety precautions	1138

Overcomes the disadvantages of metal spring systems

An entirely unconventional interference unit that uses the pulling force of magnets for the buffer.
The soft texture and stable pressing pressure eliminate damage to the workpiece.
Ideal for damage-free handling of ultra-small devices and fragile workpieces.

A general-purpose is available

FBU2-SU Series with the load capacity of 200 g has been added.
The strength of the movable part has been increased to support a wider range of applications.

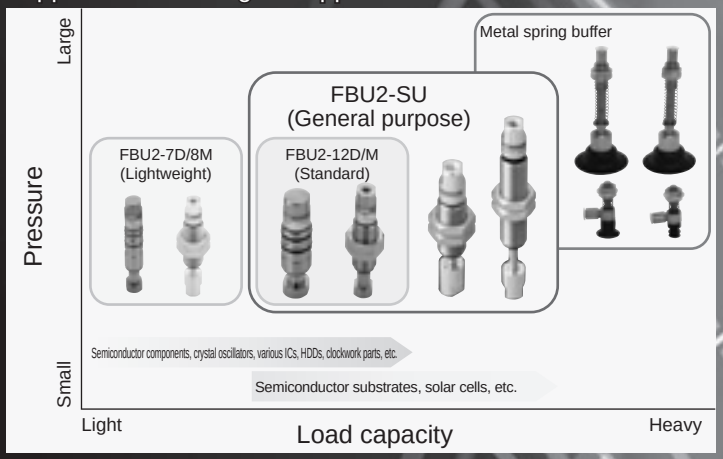

Uniform pressure

If the magnets in the movable shaft and fixed shaft are misaligned, a diagonal line of magnetic force appears and power is generated as the axial force tries to return.

Magnetic return force constant in the axial direction

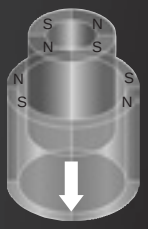

Pressure characteristics

Pressure due to magnetic force is selected from the 3 ranges of 0.2N, 0.5N and 1.0 N depending on the model. All are nearly constant regardless of the stroke.

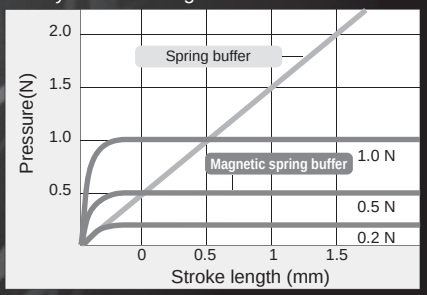

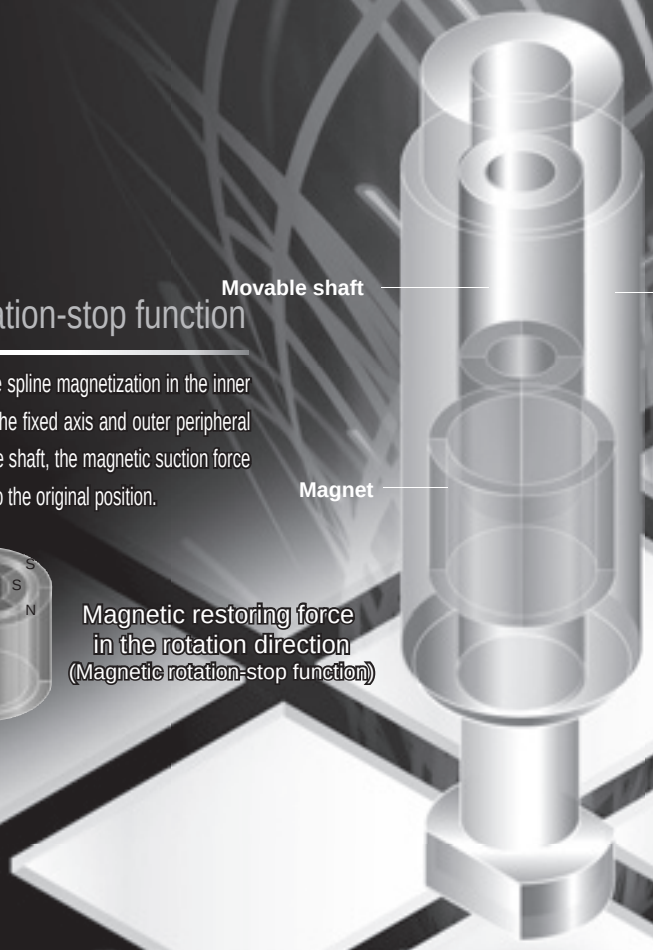

With rotation-stop function

By applying the 4-pole spline magnetization in the inner peripheral surface of the fixed axis and outer peripheral surface of the movable shaft, the magnetic suction force is activated to return to the original position.



Magnetic restoring force in the rotation direction
(Magnetic rotation-stop function)

Small and lightweight (FBU2 series)

The component parts are only made up of a movable part and fixed part. This creates a compact and ultra-lightweight (5 g or less = FBU2-7D) product. The movable part is lightweight, allowing soft contact and shock reduction with the workpiece.

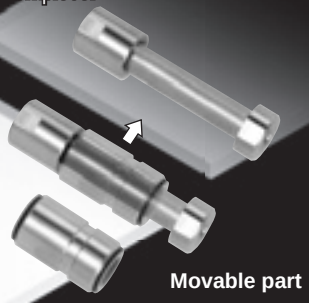

Magnetic spring buffer FBU2 Series

Compact and high-precision magnetic spring buffer FBU2 Series that adopts magnetic springs with original cushioning mechanism that utilizes magnetic pulling force to achieve stable pressing force, low dust generation and long service life.

A high-precision bearing is available

Standard and high-precision are available for the rod guide.
The bearing can be selected depending on the X-Y direction repeated return accuracy of the movable shaft.
(FBU2-SU is standard only)

Vacuum supply bracket is available

Brackets are available for the spigot.
For the high precision HV, vacuum supply is enabled from the bracket, eliminating the reaction force of the piping tube and the like and further improving the pressing pressure stability.

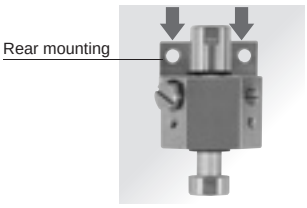

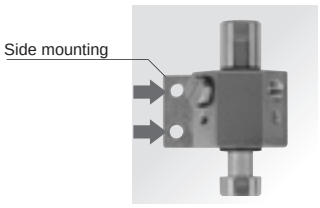

Clean & long life

Dust generation rate is reduced as there is no metal-to-metal contact and the movable contact area is very small compared with the conventional metal spring. Moreover, since the thrust is generated by magnetic force, less fatigue occurs compared with metal springs and the like, achieving long service life and stable performance.

Rechargeable battery manufacturing process compatible

As it has limited the use of copper-based materials for the air flow paths and sliding parts (P4 specification or equivalent) as standard, it has a structure that can be used in the rechargeable battery manufacturing process.

Flexible combination of head and tail

The shape of the head and tail of the magnetic spring buffer can be flexibly combined according to the application.

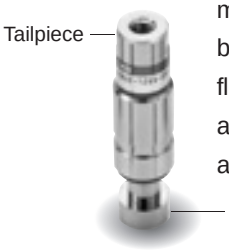

Diverse applications

It enables various usages including pick-and-place or transport of parts through vacuum suction, pressing of workpieces and insertion of parts.

- Device transport

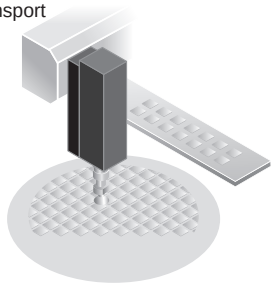

- DVD, HDD transport
- Flexible substrate suction transport
- Crystal device suction transport
- Component insertion
- Pressing inspection for mobile phone buttons

FBU2 Series variations

	O.D.	Bearing precision	Pressure (N) 0.2	0.5	1.0	Stroke length (mm) 2	6	16	Tailpiece shape Without hole	M3	M4	M5	M6	Head piece shape Without hole	M3	M4	M5	M6	Page
Lightweight FBU2-7	ø7 h7	S Standard	●	●	●	●	●	●	●	●	●	●	●	●	●	●	●	●	1124
		H High precision	●	●	●	●	●	●	●	●	●	●	●	●	●	●	●	●	
	M8×0.75	HV Internal flow path high precision	●	●	●	●	●	●	●	●	●	●	●	●	●	●	●	●	
Standard FBU2-12	ø12 h7	S Standard		●	●	●	●	●	●	●	●	●	●	●	●	●	●	●	1124
		H High precision		●	●	●	●	●	●	●	●	●	●	●	●	●	●	●	
	M12×1	HV Internal flow path high precision		●	●	●	●	●	●	●	●	●	●	●	●	●	●	●	
General purpose FBU2-SU	M12×1	- Standard only		●	●	●	●	●	●	●	●	●	●	●	●	●	●	●	1130



Magnetic spring buffer

FBU2 Series

Outer diameter: M8, M12, ø7, ø12
Load capacity: 30, 80 g

RoHS

°F = 9/5 °C + 32

Specifications

Values at room temperature of 23°C.

Item		FBU2-7D				FBU2-8M		FBU2-12D					FBU2-12M		
		S		H/HV		S		S			H/HV		S		
O.D.		ø7h7				M8X0.75		ø12h7					M12X1		
Appearance		S/H 		HV 				S/H 			HV 				
Buffer pressure	N	0.1 to 0.2				0.1 to 0.2		0.4 to 0.6,0.9 to 1.1					0.4 to 0.6,0.9 to 1.1		
Pressure variation	*1	±15% or less													
Buffer stroke length		2	6	2	6	2	6	2	6	16	2	6	2	6	16
Operating ambient temperature	°C	5 to 50		5 to 40		5 to 50		5 to 50			5 to 40		5 to 50		
Bearing clearance	mm	0.2 or less		0.05 or less		0.2 or less		0.2 or less			0.05 or less		0.2 or less		
Max. holding torque	*2 N·cm	0.25 and over (reference value)						*3					*3		
Return positioning accuracy *4	X-Y mm	±0.1 or less		±0.05 or less		±0.1 or less		±0.1 or less			±0.05 or less		±0.1 or less		
	Z mm	±0.1 or less													
	θ °	3 or less													
Load capacity	g	30 or less						80 or less							

*1: Indicates pressure fluctuations within the stroke. Pressure is not proportional to the stroke.
*2: If a rotary torque exceeding the max. holding torque is applied on the moving axis, the moving axis will step out and rotate 180°.
* Holding torque...Force is applied in the θ direction (Fig. 1) to enable the movable shaft to return to its original position even if the position of the movable shaft has deviated
*3: Refer to the table at right for FBU2-12M/12D holding torque.
*4: Refer to the figure below (Fig. 1) for return positioning accuracy.
The figure shows buffer return accuracy.
*5: Consult with CKD for requirements not complying with specifications.
*6: Load capacity indicates the max. load (jig and suctioned workpiece) mounted on the head piece.

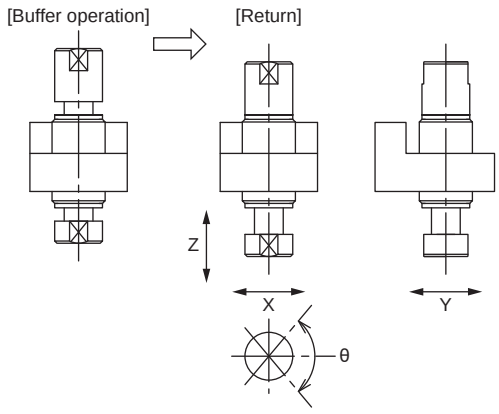

(Fig. 1) Return detailed drawing

(FBU2-12M/12D max. holding torque (reference value))

Pressure (N)	Stroke length (mm)	Holding torque (N·cm)
0.5	2	0.5 or more
	6	0.5 or more
	16	1.2 or more
1	2	1.2 or more
	6	1.2 or more
	16	2.5 or more

Indicates the holding torque at the outer end.

How to order

FBU2 - 12D - S - 10 - 6 - T3 - H3

- FBU2 — Model No.
- 12D — A O.D.
- S — B Bearing precision
- 10 — C Pressure
- 6 — D Buffer stroke length
- T3 — E Tailpiece shape
- H3 — F Head piece shape

Code	Description	Model No. FBU2-7D	FBU2-8M	FBU2-12D	FBU2-12M
A O.D.					
7D	ø7h7 spigot	●			
8M	M8 x 0.75 full thread		●		
12D	ø12h7 spigot			●	
12M	M12 x 1 full thread				●
B Bearing precision					
S	Standard (bearing clearance 0.2 mm or less)	●	●	●	●
H	High precision (bearing clearance 0.05 mm or less)	●		●	
HV	Internal flow path high precision (bearing clearance 0.05 mm or less)	●		●	
C Pressure (N)					
02	0.2	●	●		
05	0.5			●	●
10	1.0			●	●
D Buffer stroke length (mm)					
2	2	●	●	●	●
6	6	●	●	●	●
16	16			●	●
E Tailpiece shape					
TB	Without hole	●	●	●	●
T3	M3 female thread depth 3	●	●	●	●
T5	M5 female thread depth 4			●	●
F Head piece shape					
HB	Without hole	●	●	●	●
H3	M3 female thread depth 3	●	●	●	●
H5	M5 female thread depth 4			●	●

[Example of model No.]

O.D. ø12h7 spigot

FBU2-12D-HV-05-6-TB-H5

- A O.D. : ø12h7 spigot
- B Bearing precision : Internal flow path high precision
- C Pressure (N) : 0.5N
- D Buffer stroke length : 6 mm
- E Tailpiece shape : Without hole
- F Head piece shape : M5 female thread depth 4

Combination of bearing precision, buffer stroke, tailpiece shape, and head piece shape

		B Bearing precision S	H	HV
D Buffer stroke length	**2**	●	●	●
	6	●	●	●
	16	●		
E Tailpiece shape	**TB**	●	●	●
	T3	●	●	
	T5	●	●	
F Head piece shape	**HB**	●	●	
	H3	●	●	●
	H5	●	●	●

Model No. of single mounting bracket for spigot

A O.D.	Model No. of single bracket	
	L-type installation	Straight installation
7D	FBU2- 7D-B1	FBU2- 7D-B2
12D	FBU2-12D-B1	FBU2-12D-B2

Internal structure and parts list

● FBU2-*-S (standard)
-*-H (high precision)

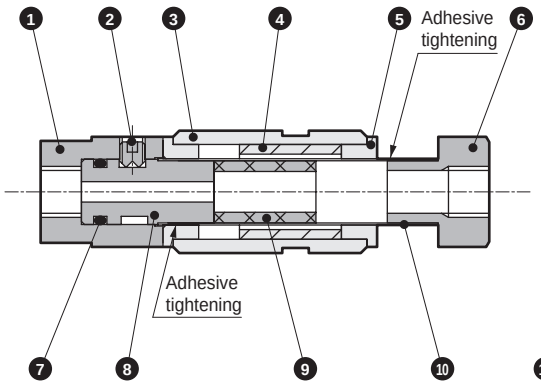

● FBU2-*-HV (precise internal flow path)

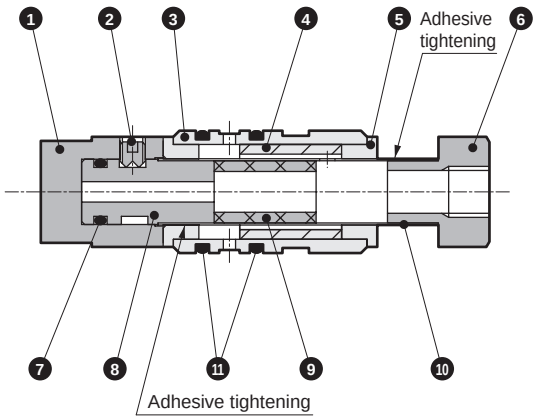

No.	Part name	Material	Remarks
1	Tailpiece	Aluminum alloy	Electroless nickel plating
2	Hexagon socket set screw	Stainless steel	
3	Fixed shaft	Stainless steel	
4	Ring magnet	Plastic magnet	
5	Bearing	Fluorine resin	Standard bearing type
		Polyester-based resin	Internal flow path type
6	Head piece	Aluminum alloy	Electroless nickel plating

No.	Part name	Material	Remarks
7	O-ring	Nitrile rubber	
8	Tail joint	Aluminum alloy	Trivalent chromate treatment
9	Ring magnet	Plastic magnet	
10	Guide tube	Stainless steel	
11	O-ring	Nitrile rubber	Internal flow path type
12	Hexagon nut	Carbon steel	Electroless nickeling (full thread only)

Bracket material

Model No.	Material	Remarks
FBU2- 7D-B1	Aluminum alloy	Electroless nickel plating
FBU2- 7D-B2		
FBU2-12D-B1		
FBU2-12D-B2		

Weight

●FBU2-8M /7D

(Unit: g)

Model No.	Fixed section	Movable part (*1)	Tailpiece (movable part)		Head piece (movable part)		Bracket (*2)	
			TB	T3	HB	H3	B1	B2
FBU2-8M-S-02-2	5.5	1.2	0.7	0.7	0.4	0.3	-	-
FBU2-8M-S-02-6		1.3						
FBU2-7D-S-02-2	2.2	1.2					8.9	13.1
FBU2-7D-S-02-6		1.3						
FBU2-7D-H-02-2		1.0						
FBU2-7D-H-02-6								
FBU2-7D-HV-02-2	2.1							
FBU2-7D-HV-02-6								

*1: Total weight of movable part = movable part + tailpiece + head piece, product weight = fixed part + movable part + tailpiece + head piece.
*2: Plug and set screw are included with bracket.

●FBU2-12M/12D

(Unit: g)

Model No.	Fixed section	Movable part (*1)	Tailpiece (movable part)			Head piece (movable part)			Bracket (*2)	
			TB	T3	T5	HB	H3	H5	B1	B2
FBU2-12M-S-05/10-2	10.2	2.4	2.2	2.2	2.0	1.2	1.2	1.1	-	-
FBU2-12M-S-05/10-6		2.5								
FBU2-12M-S-05/10-16	14.0	3.9								
FBU2-12D-S-05/10-2	8.3	2.4							18.3	28.6
FBU2-12D-S-05/10-6		2.5								
FBU2-12D-S-05/10-16	12.9	3.9								
FBU2-12D-H-05/10-2	8.1	2.4								
FBU2-12D-H-05/10-6		2.5								
FBU2-12D-HV-05/10-2	7.1	2.4								
FBU2-12D-HV-05/10-6		2.5								

*1: Total weight of movable part = movable part + tailpiece + head piece, product weight = fixed part + movable part + tailpiece + head piece.
*2: Plug and set screw are included with bracket.

Dimensions (FBU2-7D, FBU2-8M)

● FBU2-7D-S
● FBU2-7D-H

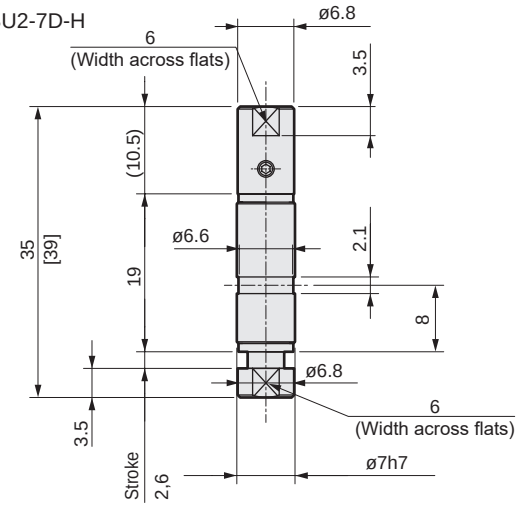

Note: Values in ( ) are dimensions for the 6-stroke.

● FBU2-7D-HV

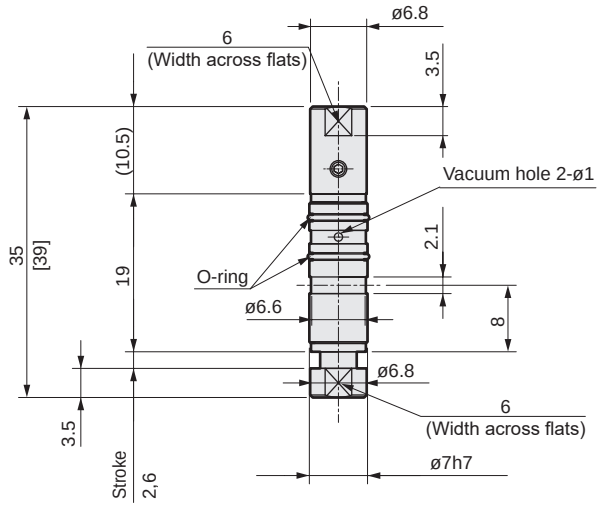

Note: Values in ( ) are dimensions for the 6-stroke.
Note: The O-ring is shipped installed.
Apply a light coat of lubricant, such as grease, to the O-ring to maintain sealing.
Note: Figure dimensions are the same regardless of head piece and tailpiece shape.

● FBU2-8M-S

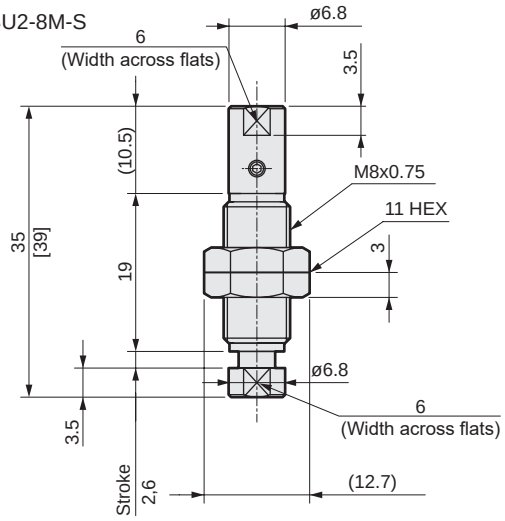

Note: Values in ( ) are dimensions for the 6-stroke.

Dimensions (FBU2-12M, FBU2-12D)

● FBU2-12M-S

Stroke: 2, 6

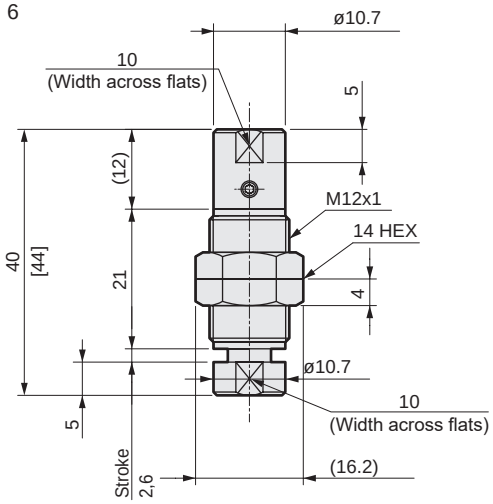

Stroke: 16

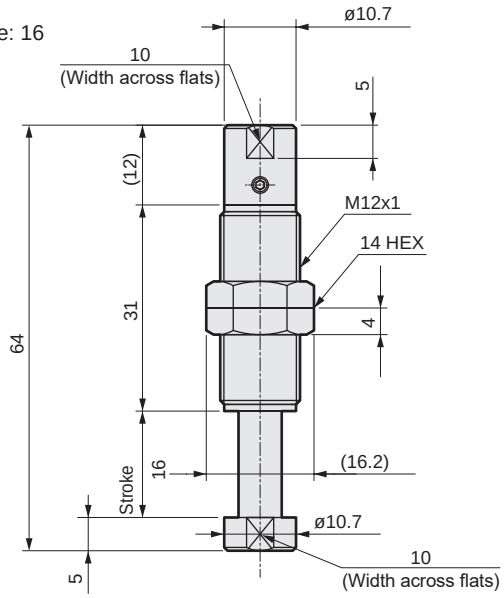

Note: Values in ( ) are dimensions for the 6-stroke.

● FBU2-12D-S/H

Stroke: 2, 6

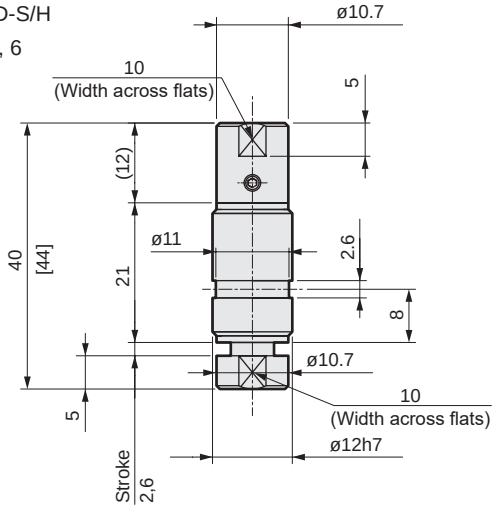

Stroke: 16

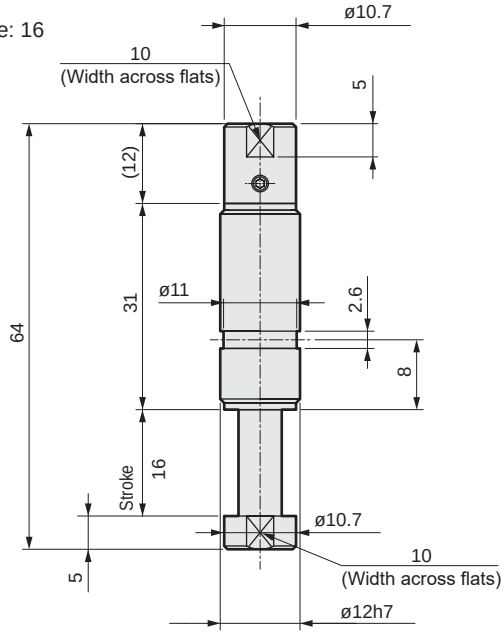

Note: Values in ( ) are dimensions for the 6-stroke.

● FBU2-12D-HV

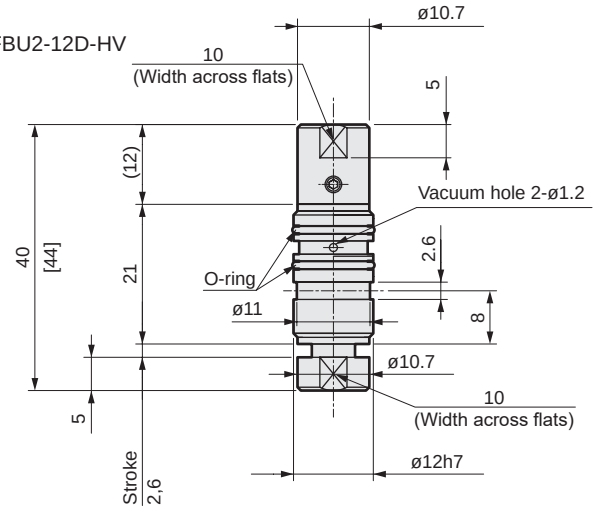

Note: Values in ( ) are dimensions for the 6-stroke.

Note: The O-ring is shipped installed. Apply a light coat of lubricant, such as grease, to the O-ring to maintain sealing.

Note: Figure dimensions are the same regardless of head piece and tailpiece shape.

Bracket dimensions

● FBU2-7D-B1

(Attachments: FPL-M3, set screw, M2 x 2)

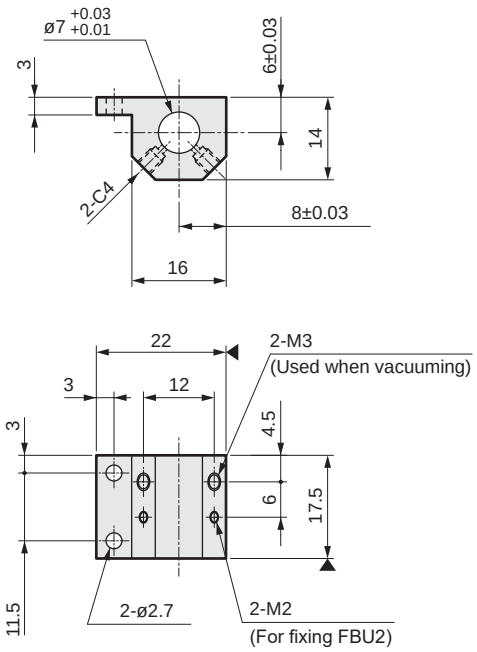

▶ indicates the FBU2 installation reference surface.

● FBU2-7D-B2

(Attachments: FPL-M3, set screw, M2 x 2)

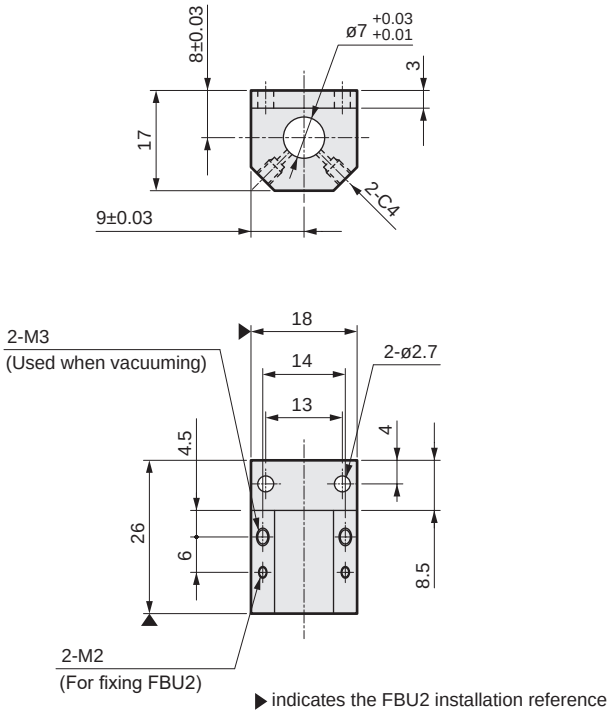

▶ indicates the FBU2 installation reference surface.

● FBU2-12D-B1

(Attachments: FPL-M5, set screw, M2.5 x 2.5)

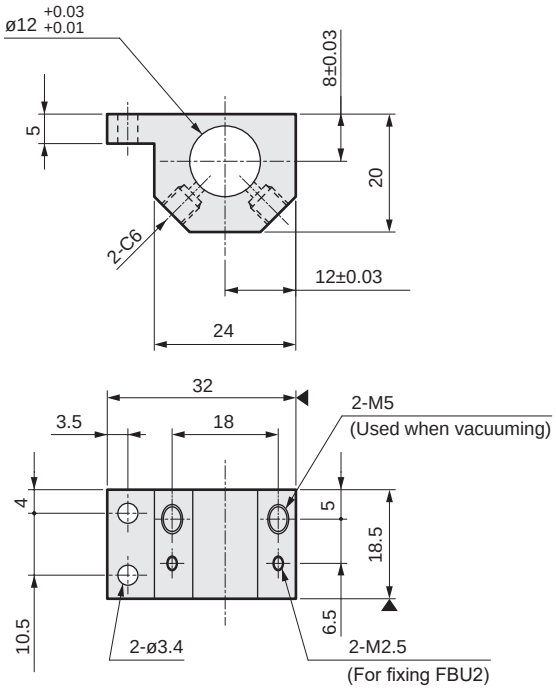

▶ indicates the FBU2 installation reference surface.

● FBU2-12D-B2

(Attachments: FPL-M5, set screw, M2.5 x 2.5)

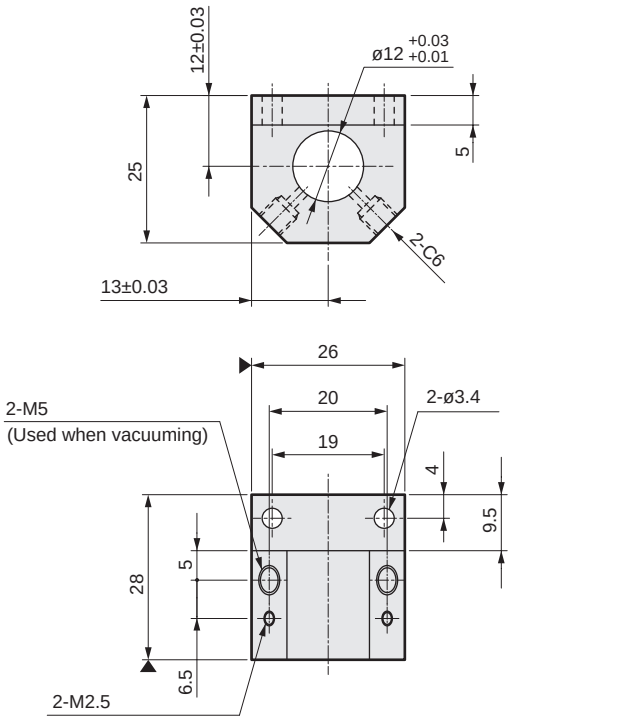

▶ indicates the FBU2 installation reference surface.

Note: When using for vacuum, tighten plugs (FPL-M3, M5) in empty screw holes (M3, M5).

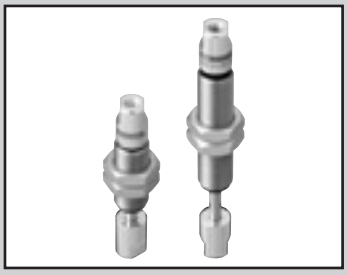

Magnetic spring buffer

FBU2-SU Series

Outer diameter: M12, full thread
Load capacity: 200 g

RoHS

Specifications

Item			FBU2-SU
O.D.			M12x1
Buffer pressure		N	0.4 to 0.6,0.9 to 1.1
Pressure variation *1)			±15% or less
Buffer stroke length		mm	2,6,16
Operating ambient temperature		°C	5 (41°F) to 50 (122°F)
Bearing clearance		mm	0.2 or less
Max. holding torque		N·cm	*2)
Home return accuracy *3)	X-Y	mm	±0.1 or less
	Z	mm	±0.1 or less
	θ	°	3 or less
Load capacity		g	200 or less

*1: Indicates pressure fluctuations within the stroke. Pressure is not proportional to the stroke.
*2: If a rotary torque exceeding the max. holding torque is applied on the moving axis, the moving axis will step out and rotate 180°.
* Holding torque: Force which can return to the original position even if force is applied in θ direction (Fig. 1) and moving axis position deviates.
*3: Refer to the figure below for return positioning accuracy. The figure shows buffer return accuracy.
*4: Consult with CKD for requirements not complying with specifications.

[FBU2-SU max. holding torque (reference value)]

Pressure (N)	Stroke length (mm)	Holding torque (N·cm)
0.5	2	0.5 or more
	6	0.5 or more
	16	1.2 or more
1	2	1.2 or more
	6	1.2 or more
	16	2.5 or more

Indicates the holding torque at the outer end.

[Buffer operation] [Return]

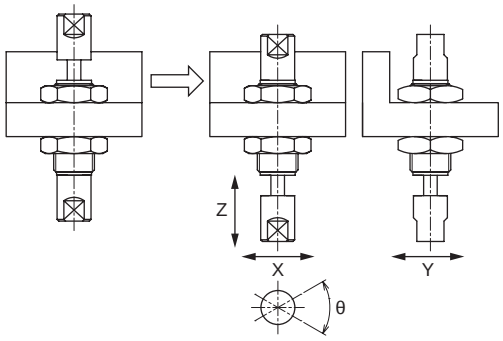

How to order

FBU2 - SU - 05 - 6 - T3 - H3

- Model No.
- A Pressure
- B Buffer stroke
- C Tail shape
- D Head shape

Code	Description
A Pressure (N)	
05	0.5
10	1.0
B Buffer stroke (mm)	
2	2
6	6
16	16
C Tail shape	
TB	Without hole
T3	M3 female thread depth 3
T4	M4 female thread depth 4
T5	M5 female thread depth 4
T6	M6 female thread depth 5
D Head shape	
HB	Without hole
H3	M3 female thread depth 3
H4	M4 female thread depth 4
H5	M5 female thread depth 4
H6	M6 female thread depth 5

[Example of model No.]

FBU2-SU-05-16-T5-H3

- A Pressure (N) : 0.5N
- B Buffer stroke (mm) : 16 mm
- C Tail shape : M5 female thread depth 4
- D Head shape : M3 female thread depth 3

Internal structure and parts list

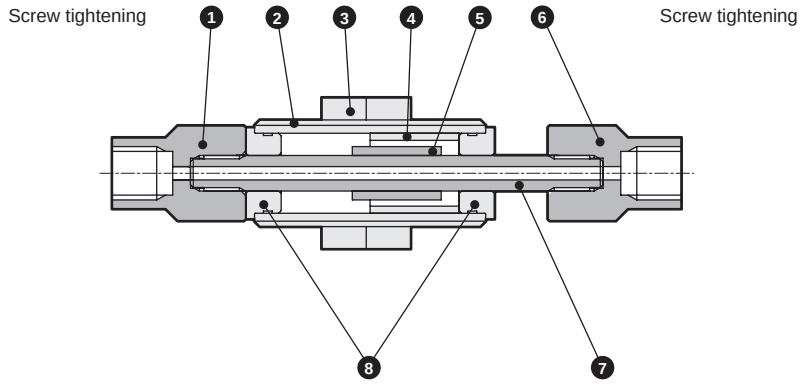

No.	Part name	Material	Remarks	No.	Part name	Material	Remarks
1	Adaptor (tail)	Aluminum alloy	Trivalent chromate treatment	5	Ring magnet	Plastic magnet	
2	Fixed shaft	Stainless steel		6	Adaptor (head)	Aluminum alloy	Trivalent chromate treatment
3	Hexagon nut	Steel	Galvanizing trivalent chromate finish	7	Rod	Stainless steel	
4	Ring magnet	Plastic magnet		8	Bearing	Polyphenylene sulfide	Filler addition

Dimensions Note: The width across flats for adaptor (tail) or adaptor (head) is arbitrary.

● FBU2-SU-05/10-6

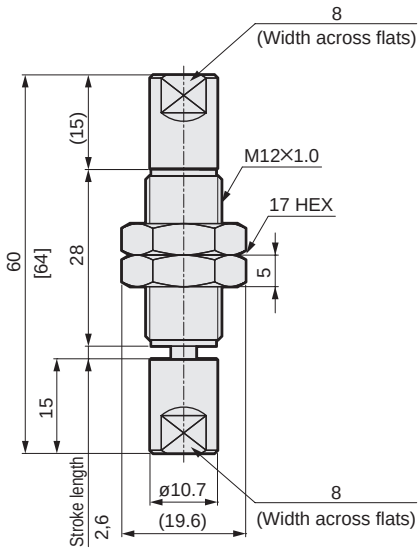

Note: Values in [ ] are dimensions for the 6-stroke.

● FBU2-SU-05/10-16

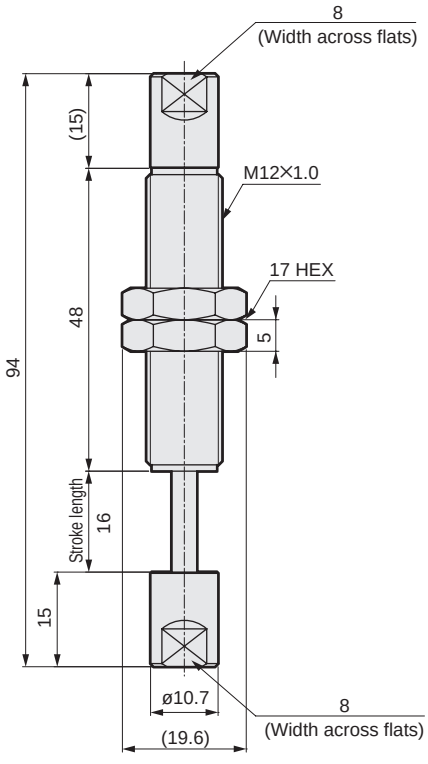

Weight

(Unit: g)

Model No.	Fixed part	Movable part
FBU2-SU-05/10-2	19.1	4.2
FBU2-SU-05/10-6	19.1	4.5
FBU2-SU-05/10-16	25.2	7.9

(Unit: g)

Adaptor				
T/H B	T/H 3	T/H 4	T/H 5	T/H 6
3.4	3.3	3.2	3.1	2.9

*1: Total weight of movable part = movable part + adaptor (tail side) + adaptor (head side),
product weight = fixed part + movable part + adaptor (tail side) + adaptor (head side).

1 Leakage flux

[Measuring instrument]

Flux meter
Probe

[Measuring method]

(1) Touch the probe to each measurement point on the FBU2.
(2) Rotate the FBU2 at center shaft standards, and measure max. flux density.

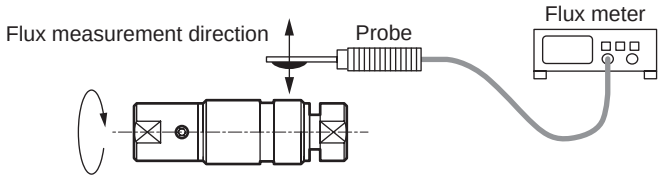

[Target]

(1) FBU2-7D-S-02-6
(2) FBU2-12D-S-05-6
(3) FBU2-12D-S-05-16

[Results]

· Magnetic flux at each position

(1) FBU2-7D-S-02-6
(2) FBU2-12D-S-05-6

(Before buffer operation)

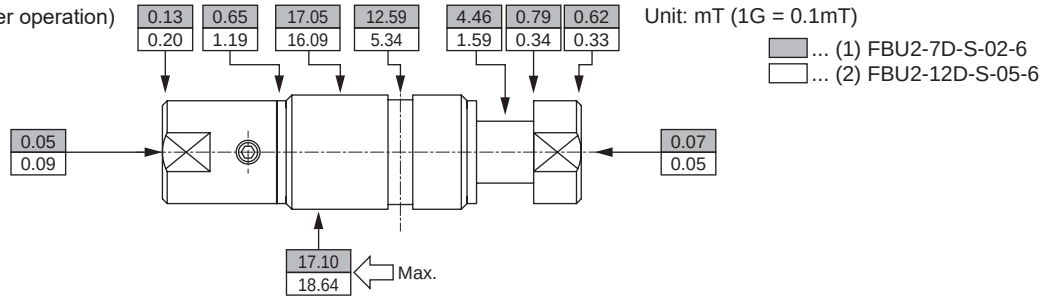

(After buffer operation)

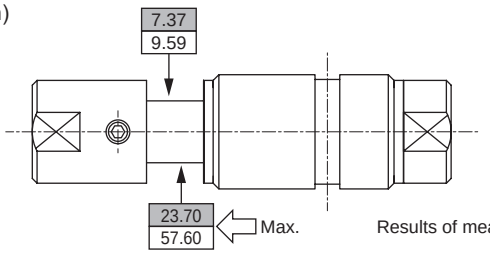

Results of measurement under flux density of 0.03 to 0.07 mT

(3) FBU2-12D-S-05-16

(Before buffer operation)

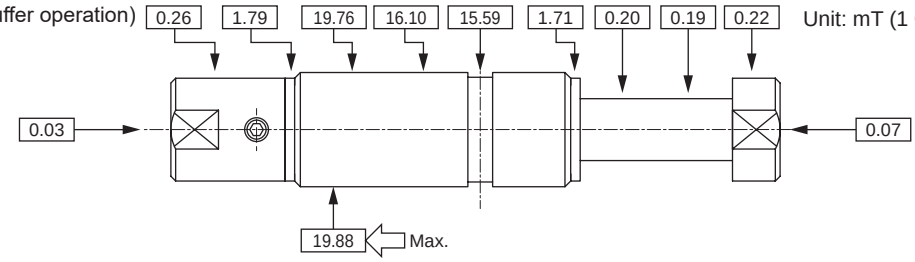

(After buffer operation)

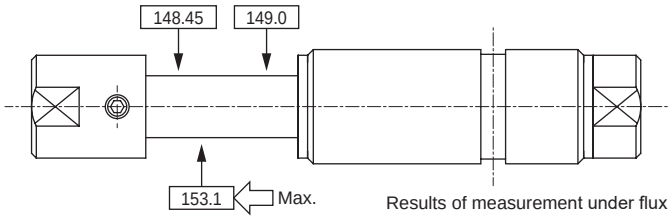

Results of measurement under flux density of 0.03 to 0.07 mT

(4) FBU2-SU-05-6

(Before buffer operation)

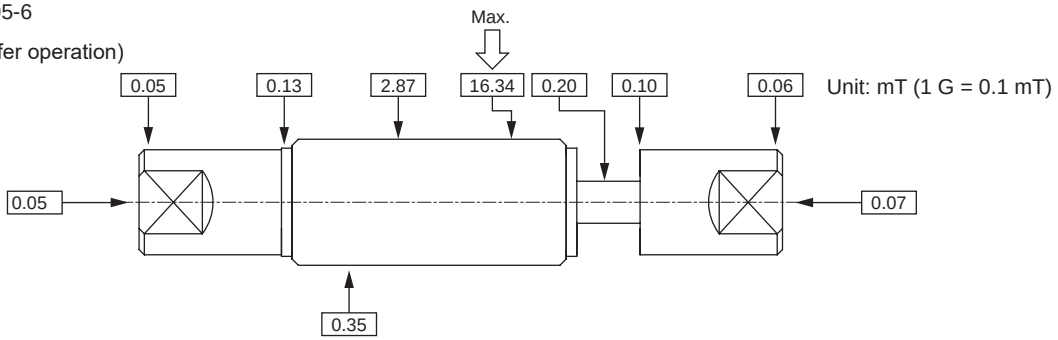

(After buffer operation)

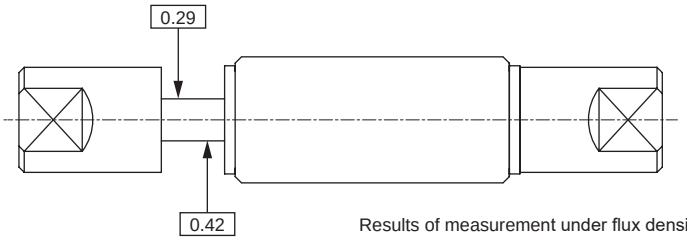

Results of measurement under flux density of 0.03 to 0.07 mT

2 Dust generation rate

[Measuring instrument]

Particle counter : Laser dust monitor
Min. measurable particle diameter : 0.1 µm
Intake : 28.3 ℓ/min

[Test circuit]

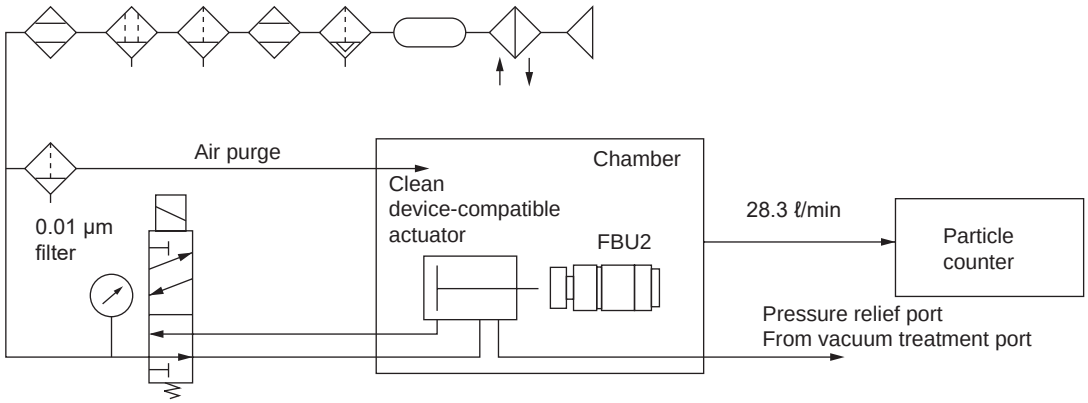

[Measuring method]

(1) Set a test sample in a stainless steel antistatic chamber.
(2) Send clean air through a 0.01 µm filter at the same flow rate as the particle counter intake rate (28.3 ℓ/min.).
(3) Confirm that the particle counter value is 0 in the immobile state.
(4) Move the test sample, and measure particles generated during movement.

* A sealed chamber is used so that particles other than those generated from the test sample do not enter the chamber.
* Confirm that the dust generation rate of the clean device-compatible actuator (vacuum treatment) to be used is 0 before starting.

[Measuring conditions]

· Air quality
For purging : "Grade 1.2.1" + 0.01 µm gas filter
· FBU2 operation speed : 50 mm/s
· Operation conditions : Install with no load parallel to the purge flow
· Measurement frequency : One minute measurement /1,000 movements
· Sample : FBU2-12D-S-10-16
FBU2-SU-05-16

[Results]

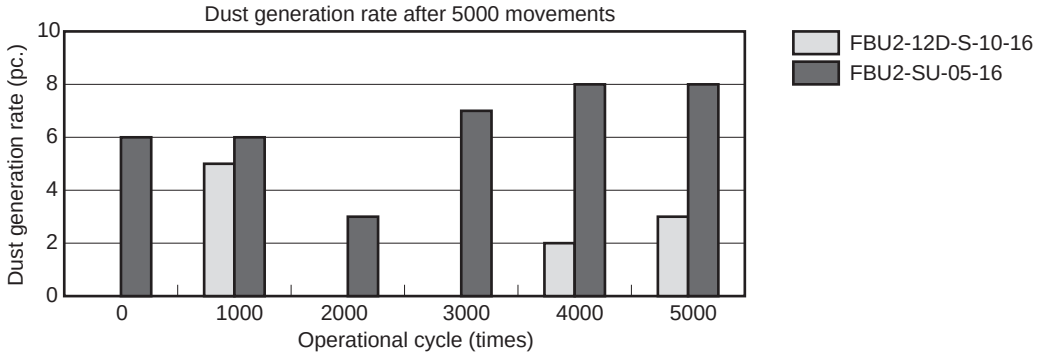

FBU2-12D-S-10-16

Particle diameter	Operational cycle					
	0	1000	2000	3000	4000	5000
0.1 µm or more	0	5	0	0	0	2
0.2 µm or more	0	0	0	0	1	0
0.3 µm or more	0	0	0	0	1	1
0.5 µm or more	0	0	0	0	0	0
1.0 µm or more	0	0	0	0	0	0
2.0 µm or more	0	0	0	0	0	0
Total dust generation rate	0	5	0	0	2	3

FBU2-SU-05-16

Particle diameter	Operational cycle					
	0	1000	2000	3000	4000	5000
0.1 µm or more	6	6	3	7	8	8
0.2 µm or more	0	0	0	0	0	0
0.3 µm or more	0	0	0	0	0	0
0.5 µm or more	0	0	0	0	0	0
1.0 µm or more	0	0	0	0	0	0
2.0 µm or more	0	0	0	0	0	0
Total dust generation rate	6	6	3	7	8	8

3 Stop position precision (X-Y)

[Measuring instrument]

Laser position sensor

[Measuring method]

Measure X-Y positioning accuracy
when manually moving the full stroke
Load : No load
Installation direction : Downward
Degree of vacuum : Non-vacuum
Piping : None

[Target]

FBU2-7D-S-02-6
FBU2-7D-HV-02-6
FBU2-12D-S-05-16
FBU2-12D-HV-05-6

[Measuring overview fig.]

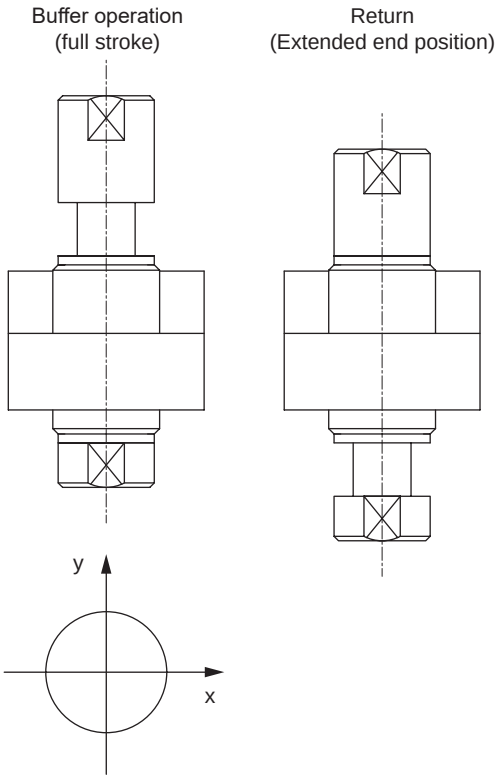

[Measuring method]

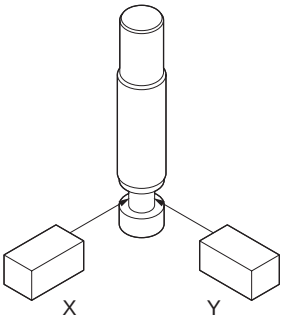

Laser position sensor

[Results]

Repeat stop position (X-Y)

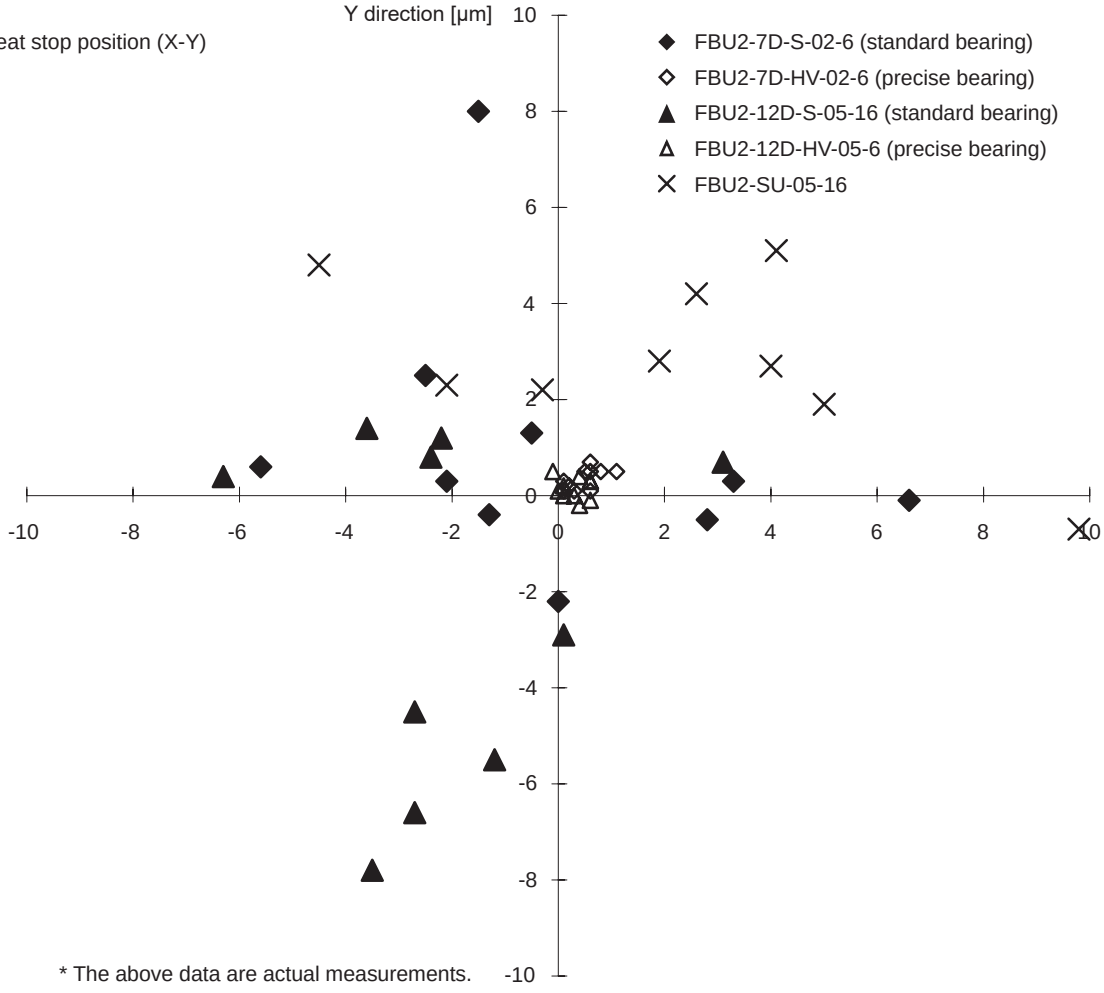

* The above data are actual measurements.

■ Suction pad list

Pad shape	Applications	Pad size									Pad material								Position locking
		ø0.7	ø1	ø1.5	ø2	ø3	ø4	ø6	ø8	ø10	N	S	U	F	SE	E	G	FS	
Standard compact VSP-ME*RM 	Ideal for compact workpieces such as semiconductor components	●	●	●	●	●	●				●	●	●	●	●	●	●		●
Standard general VSP-ME*R VSP-E*R* 	Ideal for thick and flat workpieces		●		●	●	●	●	●		●	●	●	●	●	●	●		●
For thin objects VSP-ME*P VSP-E*P* 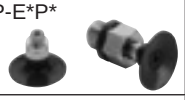	Ideal for transport of thin workpieces such as copy paper and plastic, etc.								●	●	●							●	
Sponge VSPG-*S*A 	Ideal for workpieces with irregular surfaces such as external wall material									●	Only chloroprene								

Pad material	
N	Nitrile rubber
S	Silicone rubber
U	Urethane rubber
F	Fluoro rubber
SE	Antistatic silicone rubber
E	Antistatic butadiene rubber (low resistance)
G	NBR compatible with the Food Sanitation Act
FS	Fluorosilicone rubber

■ Characteristics of each pad

Item \ Pad material			Nitrile rubber	Silicone rubber	Urethane rubber	Fluoro rubber	Fluorosilicone rubber	Butadiene rubber (low resistance)	Chloroprene rubber (sponge type)
			NBR	Si	U	FKM	FSi	BR	CR
Pad color			Black *2	White	Blue	Gray	Light brown	Black	Black
Characteristics	Surface hardness (Shore A)		40 to 60	40 to 50	60	60	40	60	-
	High-temperature usage limits		110	180	60	230	180	100	80
	Low-temperature usage limits		-30	-40	-20	-10	-50	-50	-45
	Weather resistance		△	◎	○	○	○	○	○
	Ozone resistance		△	◎	◎	◎	◎	x	○
	Acid resistance		△	○	x	◎	○	△	△
	Alkali resistance		○	◎	x	x	◎	○	◎
	Oil resistance	(Gasoline/light oil)	◎	△	◎	◎	△	x	x
		(Benzene/toluene)	△	△	△	◎	△	x	△

Reading the rating ➡ ◎: Ideal, ○: Suitable, △: Good, x: Unsuitable

*1: Surface resistance of low resistance pad is 200 Ω or less.

*2: The pad color compatible with the Food Sanitation Act is gray.

Note 1: Characteristics of general synthetic rubbers used for the pad material are indicated in the table of characteristics.

Note 2: The values for the high and low temperature usage limits are for very short periods of use. Therefore, careful consideration should be employed for usage extending for a constant period of time.

■ Compatibility table

	Model No.	Pad diameter	FBU2-7D	FBU2-8M	FBU2-12D		FBU2-12M		FBU2-SU		
			M3 female	M3 female	M3 female	M5 female	M3 female	M5 female	M3 female	M5 female	M6 female
Compact	VSP-ME0.7RM*-M3	ø0.7	●	●	●		●		●		
	VSP-ME1RM*-M3	ø1	●	●	●		●		●		
	VSP-ME1.5RM*-M3	ø1.5	●	●	●		●		●		
	VSP-ME2RM*-M3	ø2	●	●	●		●		●		
	VSP-ME3RM*-M3	ø3	●	●	●		●		●		
	VSP-ME4RM*-M3	ø4	●	●	●		●		●		
General	VSP-ME6R*-M5	ø6				●		●		●	
	VSP-ME8R*-M5	ø8				●		●		●	
	VSP-E1R*	ø1	●	●	●		●		●		
	VSP-E2R*	ø2	●	●	●		●		●		
	VSP-E3R*	ø3	●	●	●		●		●		
	VSP-E4R*	ø4	●	●	●		●		●		
	VSP-E6R*	ø6				●		●		●	
	VSP-E8R*	ø8				●		●		●	
Thin object	VSP-ME8P-M5	ø8				●		●		●	
	VSP-ME10P-M5	ø10				●		●		●	
	VSP-E8P*	ø8				●		●		●	
	VSP-E10P*	ø10				●		●		●	
Sponge	VSPG-10SA	ø10									●
Oral	VSPG-4*10E*A	4x10									●
	VSPG-4*20E*A	4x20									●
	VSPG-5*10E*A	5x10									●
	VSPG-6*10E*A	6x10									●

Note: Use with load capacity for FBU2 or less.
Use exceeding the load capacity may result in product damage.

Other pad shapes and materials are also available.
Refer to Vacuum system equipment SELVACS (Catalog No.CC-796A) as well.

Selection method for suction pad

■ The theoretical lifting force can be obtained from the area of the pad and the vacuum pressure generated when using this pad.

[kPa, N display]

$$W=\frac{CxP}{101}x10.13xf$$

W: Theoretical lifting force (N)
C: Suction area (cm^2)
P: Vacuum pressure (-kPa)
f: Safety factor

[mmHg, kg display]

$$W=\frac{C\ x\ P}{760}x1.0332xf$$

W: Theoretical lifting force (kg)
C: Suction area (cm^2)
P: Vacuum pressure (-mmHg)
f: Safety factor

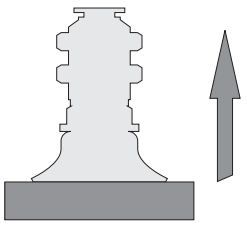
Horizontal lifting

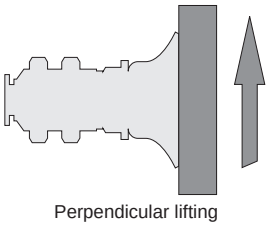
Perpendicular lifting

*1: For the sponge pad, refer to the appended table, as calculation is done using the inner diameter of the sponge pad section.
*2: For the lifting force of the bellows (multi-stage bellows)/soft (soft bellows) pad, note that the lifting force may be different from the theoretical lifting force due to the pad characteristics.
*3: Because the theoretical lifting force is the value during static conditions, adopt a safety factor of 1/4 for the horizontal lifting and 1/8 for perpendicular lifting in actual use. In addition, take acceleration into consideration when transporting. (Refer to the figure at right.)

Safety Precautions

Be sure to read this section before use.
Refer to Intro Page 63 for general precautions.

Design/selection

⚠ WARNING

- Working ambient temperature ranges differ depending on bearing. Be sure to use within the specified range.
  · Standard bearing (S): 5 to 50˚C
  · Precise bearing (H/HV): 5 to 40˚C
  Note: FBU2-SU is a standard bearing.

- This product has a built-in magnet.
  Do not use where magnetic swarf or dust is present. Otherwise it could be damaged or malfunction.

- Fix the product in place with a nut (full thread: 8M, 12M, SU) or hexagon socket set screw (spigot: 7D, 12D). When using a set screw, use the groove on the fixed shaft.
  Observe the mounting precautions on the following page when mounting.

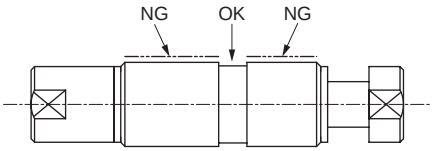

- Mount the product vertically.
  A lateral load or moment force on the movable axis can change the characteristics and affect product life.

⚠ CAUTION

- When using for vacuum applications, use a tube with low piping tension as the tension resulting from the piping tube is added to the pressure.
  Recommended tube: UP Series
  (Antistatic tube, fiber tube)

- The load (jig and suctioned workpiece) on the movable shaft must not exceed the load capacity.
  · FBU2-7D/8M: 30 g or less
  · FBU2-12D/12M: 80 g or less
  · FBU2-SU: 200 g or less

- When conveying the workpiece, acceleration should not be more than 4 G.
  Excessive acceleration could result in breakage of the product.

- When used for a rotating application, note the max. holding torque of the magnet.
  If force exceeding the maximum holding torque is applied, the shaft could slip out of synchronization and rotate 180° in reverse.

- The internal flow path high accuracy (HV) product has a leak. Clearance sealing improves pressure stability and return accuracy. This causes the vacuum to leak. (Pressure drop within 10 kPa compared to -80 kPa initial pressure.)

Mounting, installation and adjustment

⚠ WARNING

- Before starting operation, check for loosening or abnormalities at load or fitting connections.

- Start operation after confirming that devices operate correctly.
  After installing, repairing, or modifying the product, conduct a function inspection and confirm that the product is correctly installed.

- Confirm that there is no machine interference and that the actuation system is normal.

- Do not apply impact to the product by dropping it, etc. Impact load can damage the product.

- After installing the product and piping, check that its movement is smooth before using. Connection using hard tubing or piping with a small bending radius could cause improper operation or failure.

- Note that if load is applied in the rotation direction due to piping tube tension at side take-out, the product may be damaged.

- Using the product in the following way can cause moment force on the movable axis even at below load capacity, leading to malfunctions or failure.
  1. When a large jig other than the suction pad is attached to the head piece.
  2. When a large or irregularly shaped suction pad is attached.
  3. When using in ways which apply eccentric load to the movable axis.
  4. When holding one jig or workpiece with several FBU2 units.

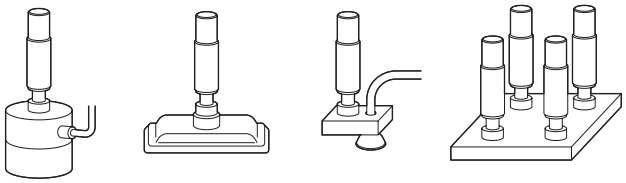

Consult with CKD when using this unit with the method above.

Mounting, installation and adjustment

⚠ CAUTION

■ Do not remove the product from the package until just before piping.
Foreign matter could enter from the piping port or shaft clearance and cause faults or malfunctions.

■ Before installation of the piping, air-flush the piping to remove all foreign matter and cutting chips.

■ Use appropriate torque to tighten the pipes when connecting them.

Port thread	Tightening torque (N·m)
M3	0.3 to 0.6
M4	0.9 to 1.1
M5	1.0 to 1.5
M6	2 to 2.7

When tightening, be sure to use the width across flats at the section to be tightened.
Using the width across flats for a different section could cause structural damage.

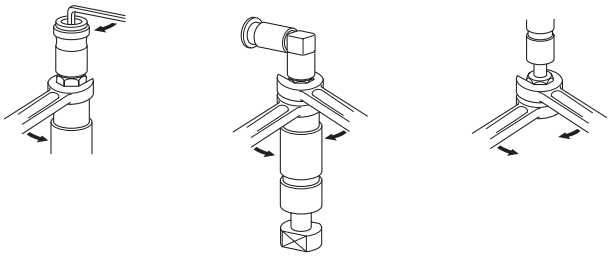

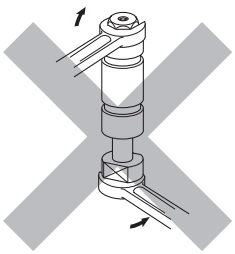

■ Do not apply lubricant to the guide tube and rod.
Functions may fluctuate.

■ Do not hit the guide tube with anything or cause scratches or dents.
The guide tube is thin-walled copper that deforms easily. Handle it with care. Scratches or indents on the guide tube could damage bearings and lead to faults or malfunctions. (excluding FBU2-SU)

■ Be sure to read the instruction manual carefully.
Fully understand contents before starting use.

■ Use a hexagon socket set screw to fix the outer diameter spigot (7D, 12D) in place and tighten with proper torque.
Excessive tightening could damage the body or bearings and lead to faults or malfunctions.

Product nominal	Fixing screw size	Tightening torque (N·m)
FBU2-7	M2 Hexagon socket set screw	0.10 to 0.12
FBU2-12	M2.5 Hexagon socket set screw	0.18 to 0.20

Use/maintenance

⚠ WARNING

■ Refer to the instruction manual and conduct careful maintenance and inspection.
Incorrect handling could result in device or system damage or operation faults.

⚠ CAUTION

■ Conduct daily inspections and regular inspections to ensure that maintenance control is done correctly.
If maintenance is not sufficient, the product's functions could deteriorate markedly and lead to a shortened service life, faults and accidents.

■ Stop use if leakage increases or if the device does not function correctly.
After installing, repairing, or modifying the product, conduct a functional inspection and confirm that the product is correctly installed.

For other precautions, check the materials below.

1. Instruction manual
Magnetic spring buffer FBU2 Series

Pressure sensors

		Page
For air	Electronic pressure switch [pressure switch]	1143
	Contact/close contact/cutting tool breakage detection switch	1235
	Air sensor [PEL systems]	1317
For coolant	Mechanical pressure switch	1340
	Electronic pressure switch	1342
	Monitor	1353

Electronic pressure switch for air

(Pressure switch)

■ Pressure sensor components/pressure sensor

Overview

Air pressure is electrically detected, displayed and outputted.

Overview

Diverse variety

Wide variation is available from compact sensors to displays.



CONTENTS

Series variation	1144
Applications	1146
● PPX with digital display (sensor/amplifier integrated)	1148
● PPD3-S with display (sensor/amplifier integrated/separated)	1176
● PPG-D with digital display (sensor/amplifier integrated)	1192
● PPE without display (sensor/amplifier integrated)	1202
● PPE-□A without display/analog output (sensor/amplifier integrated)	1205
● PPEV-□A without display/analog output (sensor/amplifier integrated)	1208
● PSW without display (sensor/amplifier integrated)	1212
● PPR with digital display (sensor/amplifier integrated)	1214
⚠ Safety precautions	1216

Model		Type		Pressure range (kPa)						Degree of protection
		With sensor/amp	No sensor/amp	0 to 980 (1000)	0 to 98 (100)	0 to −100 (−101.3)	−100 to 980 (1000)	−100 to 300	−100 to 100	
PPX 	A digital pressure sensor enabling simultaneous confirmation of the current and set pressure values with dual displays, a 3-color display, setting details copy function, 3 mode settings, etc. This fully loaded digital pressure sensor provides ease-of-use and high functionality not found conventionally.	●	-	-	-	-	● (1000)	-	●	IP40
PPD3-S 	Stainless steel diaphragm is used for sensor section, Pressure switch with digital display.	●	-	-	-	-	●	●	●	IP65
		-	●							IP65 (IP40 for display section)
PPD3 	Ideal digital indicator pressure switch for pneumatic lines. Thanks to a wide variety of port options, the desired usage is possible for suction confirmation/ contact confirmation, etc.	-	●	-	-	-	●	●	●	IP65 (Display sectionisIP40)
PPG-D 	Basic digital pressure sensor suitable for pneumatic/vacuum pressure. A variety of selectable ports to enable support to be provided globally.	●	-	-	-	●	●	-	●	IP65
PPE 	Trimmer setting semiconductor pressure switch developed for pneumatic/ vacuum circuits. Usage is flexible due to compact shape and three types of piping connections.	●	-	● (1000)	● (100)	● (-101.3)	-	-	-	IP65
PPE-□A 	Semiconductor pressure sensor developed for pneumatic/vacuum circuits. 1 to 5 V output (analog output) is proportional to applied pressure.	●	-	● (1000)	● (100)	●	-	-	-	IP65
PPEV-□A 	Semiconductor pressure sensor for pneumatic/vacuum circuits. Applied pressure proportional 1 to5 V (analog output) is output. It can be connected to a compact Component such as a pneumatic valve for use in output confirmation, etc.	●	-	● (1000)		●	-	-	-	Dust-proof
PSW 	Reliable pressure switch developed for pneumatics/vacuum circuits. Semiconductor sensor used for high-precision/high-speed response.	●	-	● (1000)	● (100)	●	-	-	-	IP40
PPR 	Digital pressure sensor dedicated for regulator with twin display capable of checking the current and set pressure simultaneously, 3-color display, locking function and energy saving mode function.	●	-	● (1000)	-	-	● (1000)	-	-	IP40

● = Available in lineup
- = Not available in lineup

*1: Body front operation section only *2: Custom made *3: Select with model No.

Switch output (number of points) *3		Analog	Applicable fluid	Mounting method										Display		Page
							Piping connection									
NPN	PNP			F.R mounting	Panel mount	Others (mount brackets, etc.)	Rc1/8	R1/8	Push-in	Plug	M5 female thread	NPT1/8	G1/8	Digital display	Output lamp only	
●(2)	●(2)	-	Air Non-corrosive gas	● Included	●	●	-	●	-	-	●	●	●	●	—	1148
●(1)	●(1)	●(1)														
●(2)	●(2)	-	Air/Non-corrosive gas (Drain/oil) Compressed air	-	●	●	●	-	●	-	-	-	-	●	-	1176
●(1)	●(1)	●(1)														
●(2)	●(2)	●(1)		-	●	●	●	-	-	-	-	-	-	●	-	
●(2)	●(2)	●(1)	Air Non-corrosive gas	-	●	●	-	●	●	●	-	-	-	●	-	1178
●(1)	●(1)	-	Air Non-corrosive gas	-	●	●	●	-	-	-	-	●	●	●	-	1192
● (2-wire) (1)	-	-	Air Non-corrosive gas	-	-	-	-	●	●	●	-	-	-	-	●	1202
-	-	● (1)	Air Non-corrosive gas	-	-	-	-	●	●	●	-	-	-	-	● (display of energized state only)	1205
-	-	● (1)	Compressed air	-	-	-	-	-	-	●	●	-	-	-	●	1208
●(1)	-	●(1)	Air Non-corrosive gas	-	-	●	-	-	-	-	●	-	-	-	●	1212
●(1)	●(1)	-	Compressed air	●	-	-	-	-	-	-	-	-	-	●	-	1214

Electronic pressure switch Applications of pressure switch

● Positive pressure/vacuum confirmation and interlock

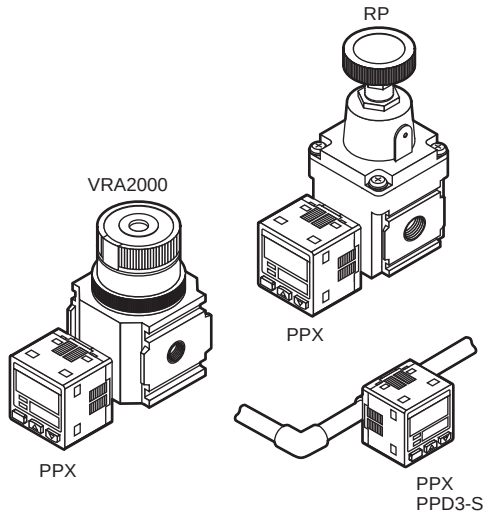

● High-function

· Settings are made easy with automatic reference and remote zero adjustment.

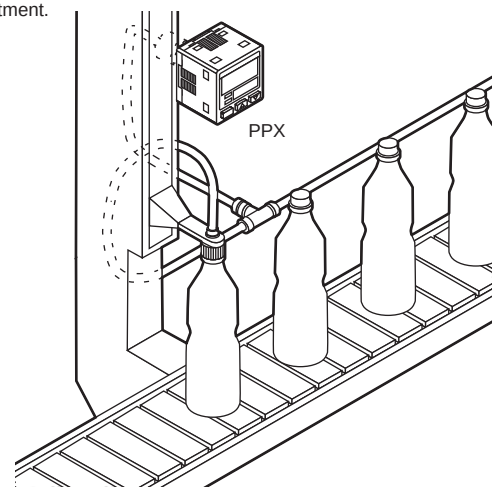

● Manifold

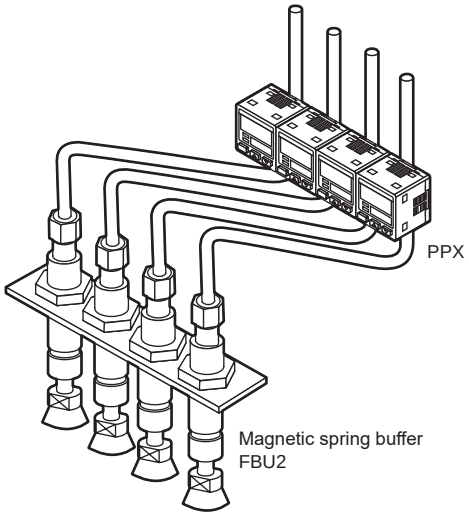

● Attains vacuum and burst pressure with one unit

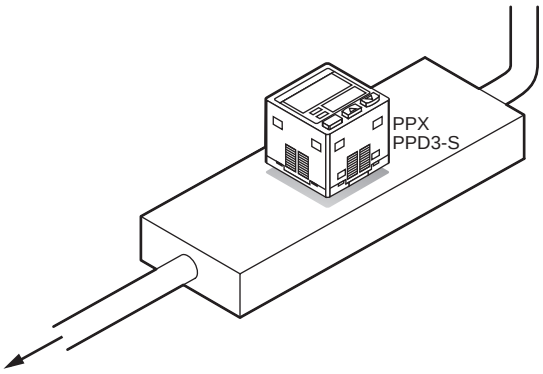

● Tank leak test

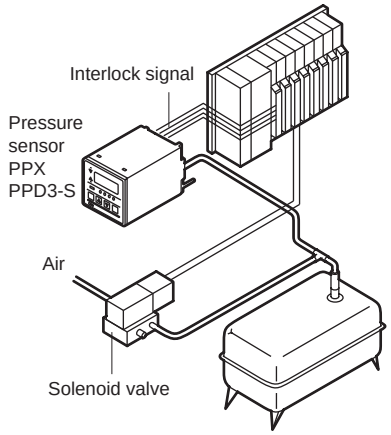

● Vacuum pressure monitor/vacuum filling

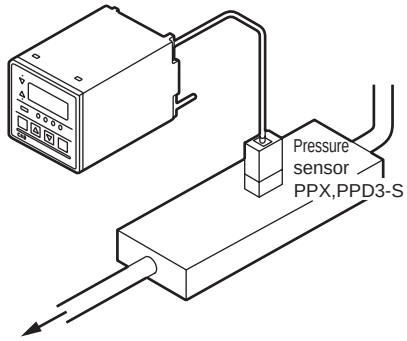

● Checking source/line pressure

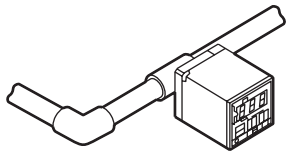

PPX, PPD3-S

● Confirmation of vacuum suction for parts, etc.

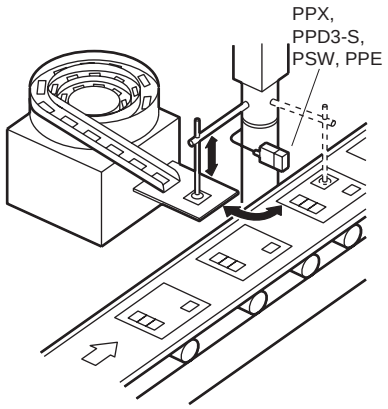

● Contact confirmation

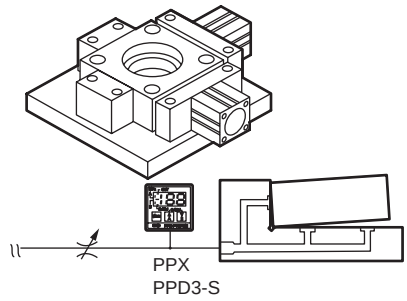

Set values can be changed while viewing present values!

Comparison output 1
Operation indicator lamp

IO-Link type has
communication operational indicator lamp

Comparison output 2
Operation indicator lamp

High-function type has analog
voltage output operational indicator lamp



Present value [Main display section]
3-color display (red/green/orange)

Main display section changes between green and red in conjunction with output ON/OFF and shows orange during setting.

Set value [Sub-display section]
Sub-display section can be customized

Arbitrary alphanumeric characters other than set values can be displayed.

Introducing the IO-Link model

IO-Link is a digital communication standard for sensors/actuators at factory sites. (IEC 61131-9)
Unlike analog communication, it enables the transmission of parameters and event data.

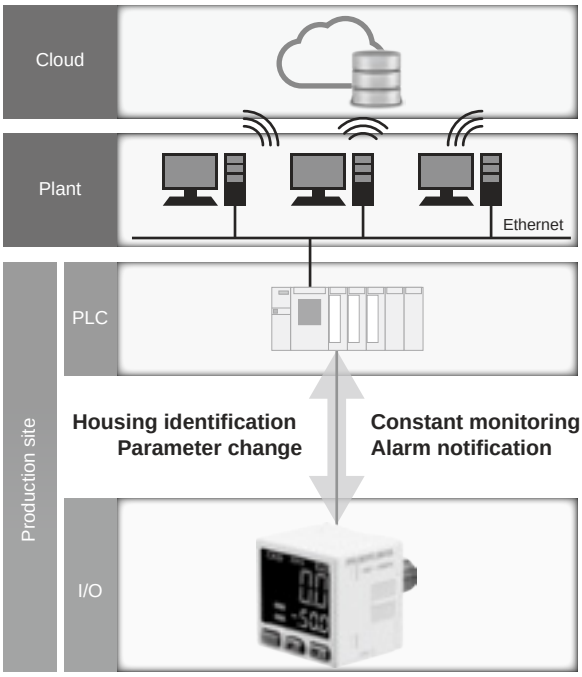

Features of IO-Link



Constant monitoring via digital data is possible.



Parameters can be set and changed via the network, enabling remote operation of the device.



Model Nos. and serial Nos.
can be checked via the network.



Settings can be copied from the master (scanner) side, making troublesome parameter resetting during maintenance unnecessary.



Device failure and disconnection can be confirmed.



The network can also be changed to Ethernet connection, making the device a part of IoT.

Selectable output

Select from comparison output, analog output and IO-Link. 3 output types in the lineup to match applications.

	Standard	High-function	IO-Link
Output 1	Comparison output (NPN/PNP)	Analog output (Voltage/current)	IO-Link
Output 2	Comparison output (NPN/PNP)	Comparison output (NPN/PNP)	Control output (PNP)

Examples of applications

Workpiece suction confirmation

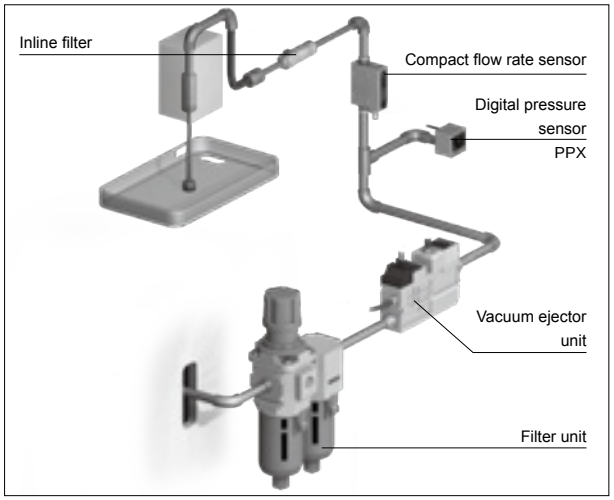

Equipment source pressure confirmation

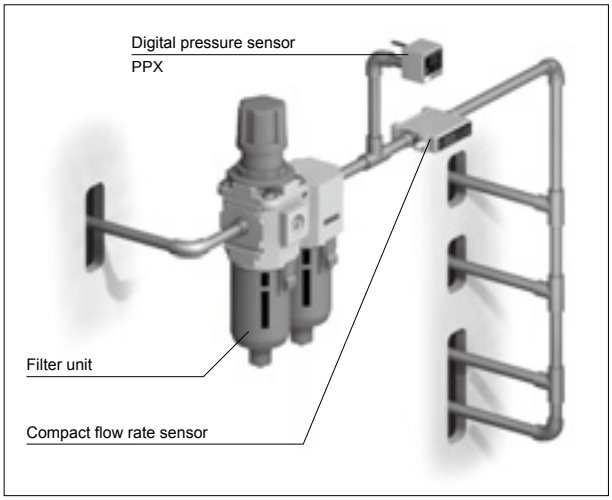

Oil-prohibited gas-contact parts

PPX-P12 Series

- **Gas-contact parts are oil-prohibited.**
- **Ideal for applications susceptible to grease, including semiconductors and medical use.**

Handy functions for ease of use

- **Easy-to-read alphanumeric display**



- **Peak/bottom hold function**

  The max. and min. values of pressure fluctuation are displayed using 2 screens.



Space saving
Close mounting possible.

- **Response time can be set in 10 increments (2.5 ms to 5000 ms)**
- **Setting details can be displayed with codes**

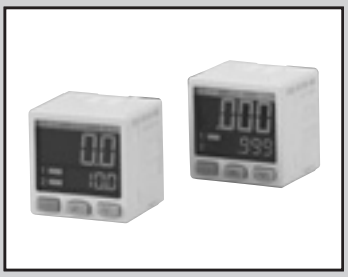

Digital pressure sensor IO-Link

PPX Series

JIS symbol



Specifications

1 MPa ≈ 145.0 psi, 1 MPa = 10 bar

Item		IO-Link	
		For low pressure PPX−R01PC	For high pressure PPX−R10PC
Type of pressure		Gauge pressure	
Rated pressure		-100.0 (≈-14 psi, -1 bar) to +100.0 kPa (≈14 psi, 1 bar)	-0.100 (≈-14 psi, -1 bar) to +1.000 MPa (≈145 psi, 10 bar)
Set pressure		-101.0 (≈14 psi, -1 bar) to +101.0 kPa (≈14 psi, 1 bar)	-0.101 (≈-14 psi, -1 bar) to +1.010 MPa (≈146 psi, 10 bar)
Proof pressure		500 kPa (≈72 psi, 5 bar)	1.5 MPa (≈217 psi, 15 bar)
Applicable fluids		Air/non-corrosive gas	
Power supply voltage		12 to 24 VDC ±10%, ripple P-P 10% or less	
Power consumption		Normal: 720 mW or less (current consumption 30 mA or less at 24 V power supply voltage) ECO mode: 480 mW or less at STD (current consumption 20 mA or less at power supply voltage 24 V), 360 mW or less at FULL (current consumption 15 mA or less at power supply voltage 24 V)	
Communication output (C/Q) *1	IO-Link communication	IO-Link specification V1.1	
	Transmission bit rate	COM3 (230.4 kbps)	
	Process data	4 byte	
	Minimum cycle	1.0 ms	
Control output (DO)		[PNP output] PNP transistor/open collector · Max. output current: 50 mA · Applied voltage: 30 VDC or less (control output - +V interval) · Residual voltage: 2 V or less (at outflow current 50 mA)	
	Output operation	Select from NO and NC	
	Output mode	EASY mode/hysteresis mode/window comparator mode	
	Hysteresis	Min. 1 digit (variable)	
	Repeatability	±0.1% F.S. (within ±2 digits)	±0.2% F.S. (within ±2 digits)
	Response time	2.5 ms, 5 ms, 10 ms, 25 ms, 50 ms, 100 ms, 250 ms, 500 ms, 1000 ms, 5000 ms	
	Short-circuit protection	Equipped	
Display		4-digit + 4-digit 3-color LCD display (display updating cycle: 250 ms, 500 ms, 1000 ms)	
	Display pressure range	-101.0 (≈-14 psi, -1 bar) to +101.0 kPa (≈14 psi, 1 bar)	-0.101 (≈-14 psi, -1 bar) to +1.010 MPa (≈146 psi, 10 bar)
Display lamp		Orange LED	
		Output operational indicator lamp 1: Blinks during IO-Link communication, turns ON during control output in non-IO-Link communication (synchronized with output operational indicator lamp 2)	
		Output operational indicator lamp 2: Turns ON when control output is ON	
Environment conditions	Degree of protection	IP40 (IEC)	
	Ambient temperature	-10 (14°F) to +50°C (122°F), in storage: -10 (14°F) to +60°C (140°F)	
	Ambient humidity	35 to 85% RH (no condensation or freezing), in storage: 35 to 85% RH	
	Withstand voltage	1000 VAC for 1 minute applied to all charged sections/between cases	
	Insulation resistance	50 MΩ and over with 500 VDC megger overall Charging section/between cases	
	Vibration resistance	Durability 10 to 500 Hz compound amplitude 3 mm 2 hours each in XYZ directions (when mounted on panel: durability 10 to 150 Hz compound amplitude 0.75 mm 2 hours each in XYZ directions)	
	Shock resistance	Durability 100 m/S^2 (approx. 10 G) 3 times each in XYZ directions	
Temperature characteristics (+20°C as reference)		Within ±0.5% F.S.	Within ±1% F.S.
Port size *2		M5 female thread + R (PT) 1/8 male thread M5 female thread + G1/8 male thread M5 female thread + NPT1/8 male thread	
Material		Case: PBT (glass fiber included), LCD display part: acrylic resin, pressure port: SUS 303, mounting screw part: copper alloy (nickeling), switch part: silicone rubber	
Connection		Connector	
Wire length		Up to 20 m total length permissible with 0.3 mm^2 and over cable (less than 20 m when CE Marking-compliant)	
Unit change function		Only supported for overseas (-KA) (MPa, kPa, kgf/cm^2, bar, psi, mmHg, inchHg)	
Weight		Body weight: approx. 40 g, weight including package: approx. 130 g	
Accessory		PPX-C2 (2 m cable with connector): 1 pc. Unit seal label (-KA with unit change function): MPa, kPa, kgf/cm^2, bar, psi, mmHg, inchHg	

*1) When used as a standard sensor, communication output (C/Q) will be the same output operation as control output (DO).
*2) Only "M5 female thread + R (PT) 1/8 male thread" is available for Japan. All types are available for overseas.

How to order

[How to order for domestic market]

PPX - R01 PC - 6M - ○

Ⓐ Pressure range
Ⓑ Output
Ⓒ Piping shape
Ⓓ Connector cable

Code	Description
Ⓐ Pressure range	
R01	−100.0 to 100.0 kPa
R10	−0.100 to 1.000 MPa
Ⓑ Output	
PC	PNP output + IO-Link
Ⓒ Piping shape	
6M	R 1/8, M5
Ⓓ Connector cable	
Blank	2 m connector cable attached□ *1

[How to order for overseas markets]

PPX - R01 PC - 6M - ○ - KA

Ⓐ Pressure range
Ⓑ Output
Ⓒ Piping shape
Ⓓ Connector cable
Ⓔ Unit change

In compliance with new Measurement Laws, export models with unit select function cannot be used in Japan.

Code	Description
Ⓐ Pressure range	
R01	−100.0 to 100.0 kPa
R10	−0.100 to 1.000 MPa
Ⓑ Output	
PC	PNP output + IO-Link
Ⓒ Piping shape	
6M	R1/8, M5
6N	NPT1/8, M5
6G	G1/8, M5
Ⓓ Connector cable	
Blank	2 m connector cable attached *1
Ⓔ Unit change	
KA	With unit change function

*1: "Blank" 2 m connector cable is one-sided loose wire. (PPX-C2)
M12 cable with connector is a separately-sold option.

● Discrete option model No.

PPX - CN1

Code	Description
CN1	M12 connectorWith cable 1 m
CN2	M12 connectorWith cable 2 m
CN3	M12 connectorWith cable 3 m
KL	Mounting bracket (Mounting screw included)
KHS	Panel bracket
KCB	Front protective cover (when using panel bracket)

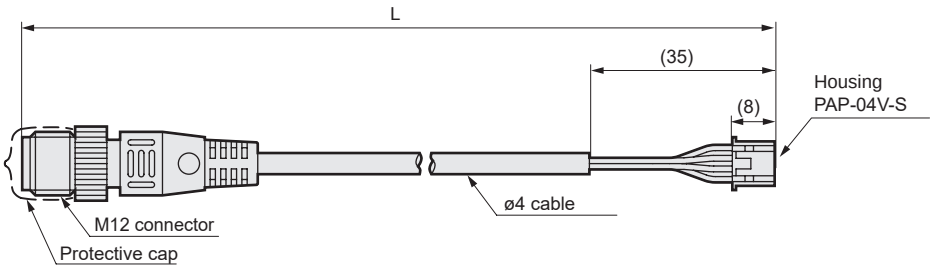

M12 connector Pin No.	Lead wire color	Housing Terminal No.	Applications
1	Brown	1	+V
2	White	3	DO
3	Blue	4	0V
4	Black	2	C/Q

Model No.	Cable length	Weight g
PPX-CN1	1m	Approx. 40
PPX-CN2	2m	Approx. 70
PPX-CN3	3m	Approx. 100

Dimensions

Same as the standard. For details, refer to page 1157.

Names and functions of display/operation section (IO-Link)

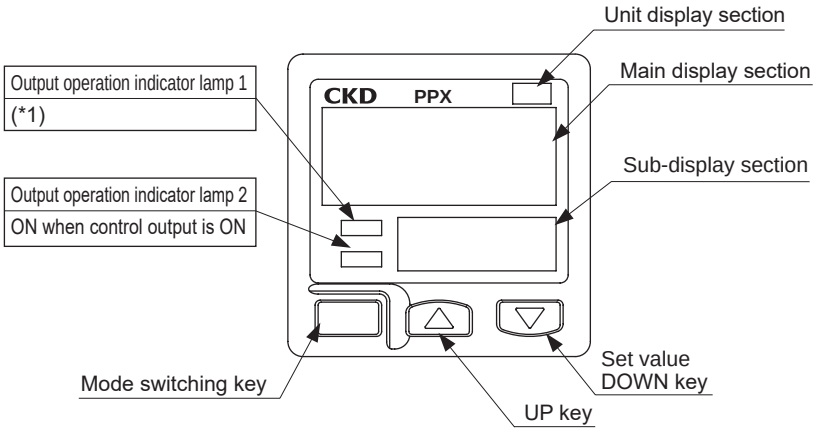

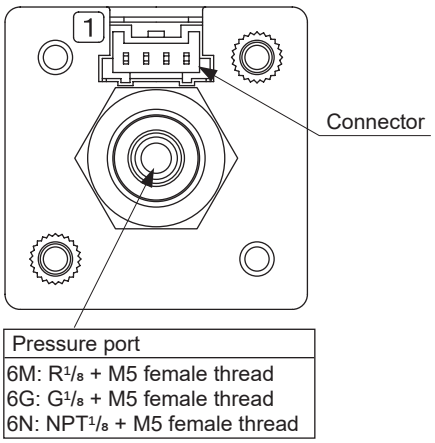

(*1)

	During non-IO-Link communication	During IO-Link communication
Display lamp operation	ON when control output is ON (*2)	Blinking operation

(*2): Synchronized with operational output display lamp 2

Connection

● When used as a standard sensor

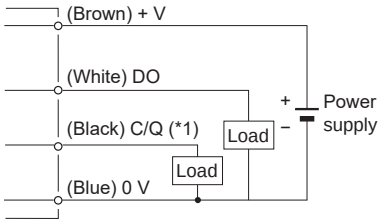

● When used connected to IO-Link master

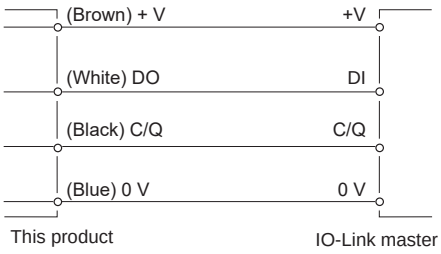

[M12 connector cable terminal array]

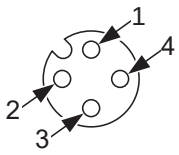

Terminal No.	Terminal name
1	+V
2	Control output (DO)
3	0V
4	IO-Link communication (C/Q) (*1)

(*1): When used as a standard sensor, IO-Link communication (C/Q) will be the same output operation as control output (DO).

M12 connector mounting

The connector will detach if the fixing ring loosens, resulting in a communication error from this product.
Be sure to confirm before use that the fixing ring is not loose.

Communication specifications

● Common to all models

Item	Details
Communication protocol	IO-Link
Communication protocol version	V1.1
Transmission bit rate	COM3 (230.4 kbps)
Port	Class A
Process data length (input)	4 byte
Process data length (output)	0 byte
Minimum cycle time	1 ms
Data storage	15 byte
SIO mode support	Yes
Vendor ID	855

● Device ID for each model

	Device ID
PPX-R01PC-6M	2179072
PPX-R10PC-6M	2179073
PPX-R01PC-6M-KA	2179074
PPX-R01PC-6N-KA	2179075
PPX-R01PC-6G-KA	2179076
PPX-R10PC-6M-KA	2179077
PPX-R10PC-6N-KA	2179078
PPX-R10PC-6G-KA	2179079

Process data (PD)

	bit 7	6	5	4	3	2	1	0
PD0	Upper byte of pressure value							
PD1	Lower byte of pressure value							

PD2 bit	Allocation	Remarks
7 6 5 4 3 2 1 0	Control output (DO)	0: OFF 1: ON
	Lock	0
	Lock	0
	Lock	0
	Lock	0
	Notification information	0: No notification 1: Notification
	Error level	0: Normal 1: Caution 2: Error

PD3	Scale Low pressure sensor: -1 High pressure sensor: -3 (with MPa selected) 0

	PD0 (31-24 bit)	PD1 (23-16 bit)
Low pressure	Pressure value [Pa] (-1010 to 1010)	
High pressure	Pressure value [Pa] (-100 to 1010)	

Function list

Function	Body side setting	IO-Link communication setting
Control output mode setting	Select from EASY mode/hysteresis mode/window comparator mode	Index61_2
Threshold setting	EASY mode: Threshold setting, hysteresis mode/window comparator mode: Low side threshold setting	Index60_1
	Hysteresis mode/window comparator mode: Hi side threshold setting	Index60_2
Zero adjustment	Run/Cancel	Index2
Key lock function	Set/Cancel	Index12
Peak/bottom hold function	Setting	Index82_4
Control output operation setting	N.O./N.C.	Index61_1
Setting response time	Select from 10 levels	Index66
Main display section color setting	Select from 4 modes	Index82_1
Pressure unit setting	Select from MPa/kPa/kgf/bar/psi/mmHg/inchHg [List of units that can be set] • For Japan/low pressure: kPa • For Japan/high pressure: MPa, kPa • For overseas/low pressure: kPa, kgf, bar, psi, mmHg, inchHg • For overseas/high pressure: MPa, kPa, kgf, bar, psi	Index83
Sub-display section display setting	Select from 5 modes	Index82_2
	No. display setting	Index84_1
	Customized display setting	Index84_2
Display speed setting	Select from 3 levels	Index82_3
Hysteresis setting	Select from 8 levels	Index61_3
Setting ECO mode	Select from 3 modes	Index80
Setting confirmation code	8-digit display	—
Setting reset	Run	Index2
Remote zero adjustment setting	—	Index2
Zero adjustment notification	—	Index85
Auto-reference setting	—	Index2
Operation time	—	Index163
No. of memory write cycles	—	Index164
Notification flag setting	—	Index168
Notification event code reading	—	Index169

* The IO-Link setting file (IODD) can be downloaded from the CKD website (http://www.ckd.co.jp/en).



Digital pressure sensor standard

PPX Series

JIS symbol



Specifications

1 MPa ≈ 145.0 psi, 1 MPa = 10 bar

Item		Standard		High-function	
		For low pressure PPX-R01□	For high pressure PPX-R10□	For low pressure PPX-R01□H	For high pressure PPX-R10□H
Type of pressure		Gauge pressure			
Rated pressure		-100.0 to +100.0 kPa	-0.100 to +1.000 MPa	-100.0 to +100.0 kPa	-0.100 to +1.000 MPa
Set pressure		-101.0 to +101.0 kPa	-0.101 to +1.010 MPa	-101.0 to +101.0 kPa	-0.101 to +1.010 MPa
Proof pressure		500 kPa (≈73 psi, 5 bar)	1.5 MPa (≈220 psi, 15 bar)	500 kPa (≈73 psi, 5 bar)	1.5 MPa (≈220 psi, 15 bar)
Applicable fluid		Air/non-corrosive gas			
Power supply voltage		12 to 24 VDC ±10% Ripple P−P 10% or less			
Power consumption		Normal: 720 mW or less (current consumption 30 mA or less at 24 V power supply voltage) ECO mode: 480 mW of less at STD (current consumption 20 mA or less at power supply voltage 24 V), 360 mW or less at FULL (current consumption 15 mA or less at power supply voltage 24 V)			
Comparison outputs (comparison output 1, comparison output 2)		[NPN output] NPN transistor/open collector · Max. inrush current: 100 mA · Applied voltage: 30 VDC or less (comparison output - 0 V interval) · Residual voltage: 2 V or less (at inrush current 100 mA)		[PNP output] PNP transistor/open collector · Max. outflow current: 100 mA · Applied voltage: 30 VDC or less (comparison output - +V interval) · Residual voltage: 2 V or less (at outflow current 100 mA)	
	Output operation	Select NO/NC with key operation			
	Output mode	EASY mode/hysteresis mode/window comparator mode			
	Hysteresis	Min. 1 digit (variable)			
	Repeatability	±0.1% F.S. (within ±2 digits)	±0.2% F.S. (within ±2 digits)	±0.1% F.S. (within ±2 digits)	±0.2% F.S. (within ±2 digits)
	Response time	2.5 ms, 5 ms, 10 ms, 25 ms, 50 ms, 100 ms, 250 ms, 500 ms, 1000 ms, 5000 ms select by key operation			
	Short circuit protection	Equipped			
External input (auto reference function / remote zero adjustment function)		—		[NPN output] ON voltage: 0.4 VDC or less OFF voltage: 5 to 30 VDC or release Input impedance: 10 kΩ Input time: 1 ms and over	[PNP output] ON voltage: 5 V to +VDC OFF voltage: 0.6 VDC or less or release Input impedance: 10 kΩ Input time: 1 ms and over
Analog voltage output		—		Output voltage: 1 to 5 V Zero point: Within 3V ± 5% F.S. Span: Within 4 V ± 5% F.S. Linearity: Within ±1% F.S. Output impedance: 1 kΩ	Output voltage: 0.6 to 5 V Zero point: Within 1 V ± 5% F.S. Span: Within 4.4 V ± 5% F.S. Linearity: Within ±1% F.S. Output impedance: 1 kΩ
Analog current output		—		Output current: 4 to 20 mA Zero point: Within 12 mA ± 5% F.S. Span: Within 16 mA ± 5% F.S. Linearity: Within ±1% F.S. Load resistance: 250 Ω (max.)	Output current: 2.4 to 20 mA Zero point: Within 4 mA ± 5% F.S. Span: Within 17.6 mA ± 5% F.S. Linearity: Within ±1% F.S. Load resistance: 250 Ω (max.)
Display		4-digit + 4-digit 3-color LCD display (display updating cycle: 250 ms, 500 ms, 1000 ms select by key operation)			
	Display pressure range	-101.0 to +101.0 kPa	-0.101 to +1.010 MPa	-101.0 to +101.0 kPa	-0.101 to +1.010 MPa
Indicator lamp		Orange LED (comparison output 1/2 oper lamp: Comparison outp ON→lamp)		Orange LED (comparison output 1 oper lamp: Comparison outp ON→lamp, Anlg V. outp oper lamp: Lit at setup)	
Environment conditions	Degree of protection	IP40(IEC)			
	Ambient temperature	-10 (14°F) to +50°C (122°F), at the time of storage: -10 (14°F) to +60°C (140°F)			
	Ambient humidity	35 to 85% RH (no condensation, freezing), store: 35 to 85% RH			
	Withstand voltage	1000 VAC for 1 minute applied to all charged sections/between cases			
	Insulation resistance	50 MΩ and over with 500 VDC megger overall charging section/between cases			
	Vibration resistance	Durability 10 to 500 Hz compound amplitude 3 mm 2 hours each in XYZ directions (when mounted on panel: durability 10 to 150 Hz compound amplitude 0.75 mm 2 hours each in XYZ directions)			
	Shock resistance	Durability 100 m/S² (approx. 10 G) 3 times each in XYZ directions			
Temp characteristics at +20°C		±0.5% F.S. or less	Within ±1% F.S.	±0.5% F.S. or less	Within ±1% F.S.
Port size	*1	M5 female thread + R (PT) 1/8 male thread			
Material		Case: PBT (glass fiber included), LCD display section: acrylic resin, pressure port: SUS 303, mounting screw section: copper alloy (nickeling), switch section: silicone rubber			
Connection		Connector			
Wire length		When the wire is extended, up to 100 m permissible with 0.3 mm² and over cable (less than 30 m when CE Marking-compliant)			
Unit change function		Only supported for overseas (-KA) (MPa, kPa, kgf/cm², bar, psi, mmHg, inchHg)			
Weight		Body weight: approx. 40 g, weight including package: 130 g			
Accessory	*2	PPX-C2 (2 m cable with connector): 1 pc. Unit seal label (KA with unit change): MPa, kPa.kgf/cm², bar, psi, mmHg, inchHg			

*1: Refer to Table 1 on the next page for export use.
*2: For (- J), connector cable is not included.

How to order

(How to order for domestic market)

PPX - R01 N - 6M - ○

Ⓐ Pressure range
Ⓑ Output
Ⓒ Piping shape
Ⓓ Connector cable

Code	Description
Ⓐ Pressure range	
R01	-100.0 to 100.0 kPa
R10	-0.100 to 1.000 MPa
Ⓑ Output	
N	NPN transistor output 2 point (Standard)
P	PNP transistor output 2 point (Standard)
NH	NPN transistor output 1 point + analog voltage output or external input (high-function)
PH	PNP transistor output 1 point + analog voltage output or external input (high-function)
Ⓒ Piping shape	
6M	R1/8, M5 female thread
Ⓓ Connector cable	
Blank	2 m connector cable attached
J *1	Without connector cable

*1: Selectable only when "N" or "P" is selected for Ⓑ Output.

(How to order for foreign market)

PPX - R01 N - 6M - ○ - KA

Ⓐ Pressure range
Ⓑ Output
Ⓒ Piping shape
Ⓓ Connector cable
Ⓔ Unit change

In compliance with the new Measurement Law, export models with unit select function cannot be used in Japan.

Code	Description
Ⓐ Pressure range	
R01	-100.0 to 100.0 kPa
R10	-0.100 to 1.000 MPa
Ⓑ Output	
N	NPN transistor output 2 point (Standard)
P	PNP transistor output 2 point (Standard)
NH	NPN transistor output 1 point + analog voltage output or external input (high-function)
PH	PNP transistor output 1 point + analog voltage output or external input (high-function)
Ⓒ Piping shape	
6M *1	R1/8, M5 female thread
6N	NPT1/8, M5 female thread
6G *2	G1/8, M5 female thread
Ⓓ Connector cable	
Blank	2 m connector cable attached
J *3	Without connector cable
Ⓔ Unit change	
KA	With unit change function

*1: Only "N" or "NH" can be selected for Ⓑ Output.
*2: Selectable only when "P" or "PH" is selected for Ⓑ Output.
*3: Selectable only when "N" or "P" is selected for Ⓑ Output.

● Discrete option model No.

PPX - C1

Code	Description
C1	Cable with connector 1 m
C2	Cable with connector 2 m
C3	Cable with connector 3 m
C5	Cable with connector 5 m
CN	Connector set (10 pcs. per set)
KL	Mounting bracket (mounting screw attached)
KHS	Panel bracket
KCB	Front protective cover (when using panel bracket)

Destination	Switch output		Unit	Unit change function	With unit seal label *1	Piping port
	NPN	PNP				
Domestic	○	○	kPa/MPa	-	-	R1/8(M5)
Asia	○	-	kPa/MPa	○	○	R1/8(M5)
Europe	-	○	kPa/MPa	○	○	G1/8(M5)
North America	○	○	kPa/MPa	○	○	NPT1/8(M5)

*1: Refer to page 1226 for the enclosed unit sealant.

[Table 1]

Type	Model No.	Port size	Output	Remarks
Standard	PPX-R01N-6M-(J)-KA	M5 female thread + R (PT) 1/8 male thread	NPN transistor/open collector	For Asia
	PPX-R10N-6M-(J)-KA			
High-function	PPX-R01NH-6M-KA			
	PPX-R10NH-6M-KA			
Standard	PPX-R01P-6G-(J)-KA	M5 female thread + G1/8 male thread	PNP transistor/open collector	For Europe
	PPX-R10P-6G-(J)-KA			
High-function	PPX-R01PH-6G-KA			
	PPX-R10PH-6G-KA			
Standard	PPX-R01N-6N-(J)-KA	M5 female thread + NPT1/8 male thread	NPN transistor/open collector	For North America
	PPX-R01P-6N-(J)-KA		PNP transistor/open collector	
	PPX-R10N-6N-(J)-KA		NPN transistor/open collector	
	PPX-R10P-6N-(J)-KA		PNP transistor/open collector	
High-function	PPX-R01NH-6N-KA		NPN transistor/open collector	
	PPX-R01PH-6N-KA		PNP transistor/open collector	
	PPX-R10NH-6N-KA		NPN transistor/open collector	
	PPX-R10PH-6N-KA		PNP transistor/open collector	

Analog output voltage - pressure characteristics

● PPX-R01NH
R01PH

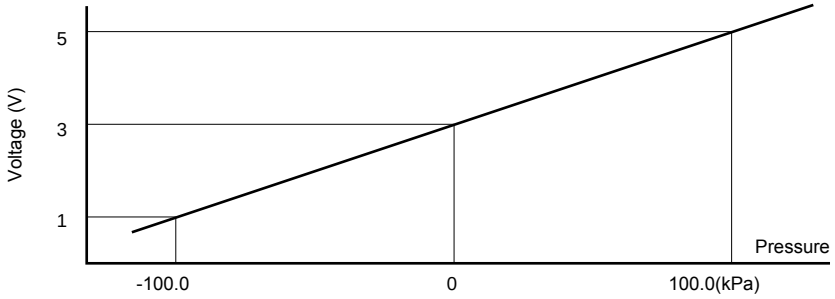

● PPX-R10NH
R10PH

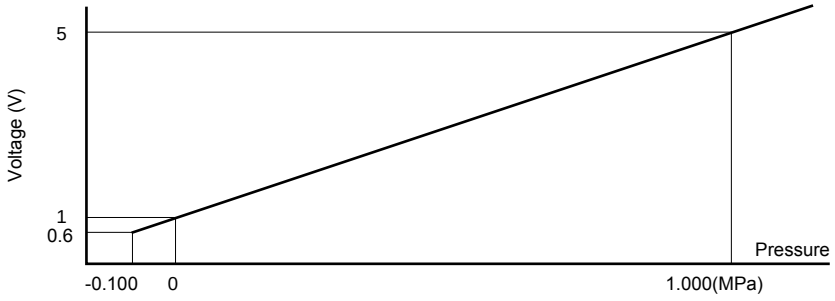

Analog output current - pressure characteristics

● PPX-R01NH
R01PH

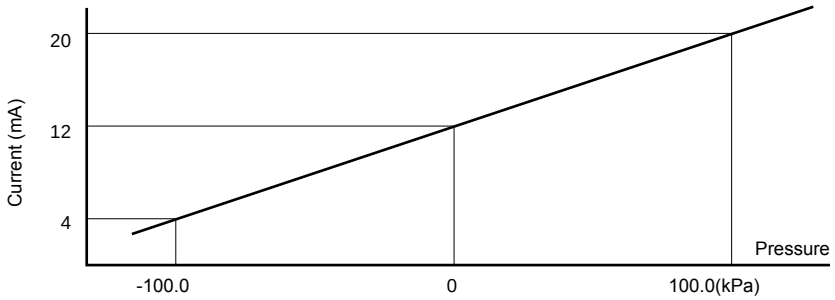

● PPX-R10NH
R10PH

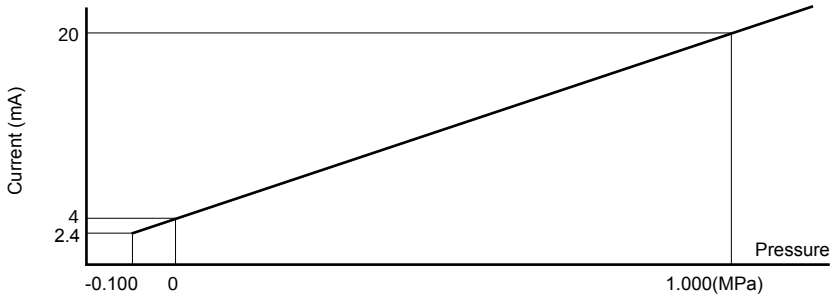

Dimensions

● PPX-R □□ -6M/6N (R thread/NPT thread)

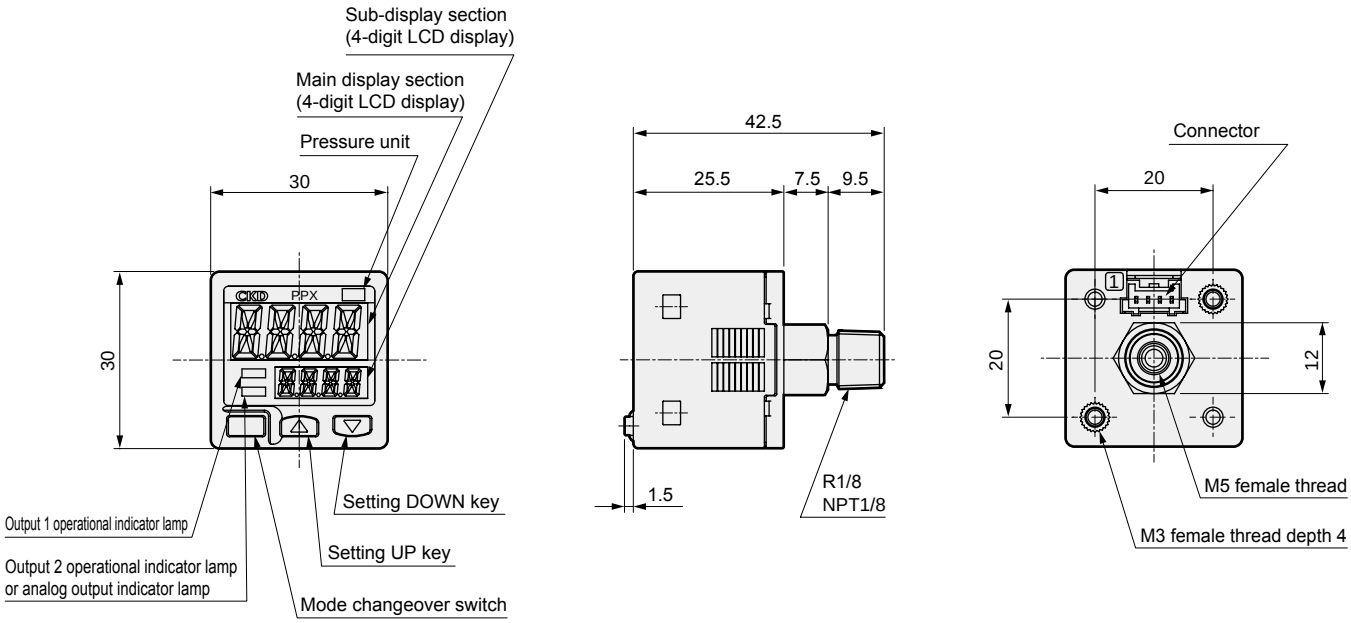

● PPX-R □□ -6G (G thread)

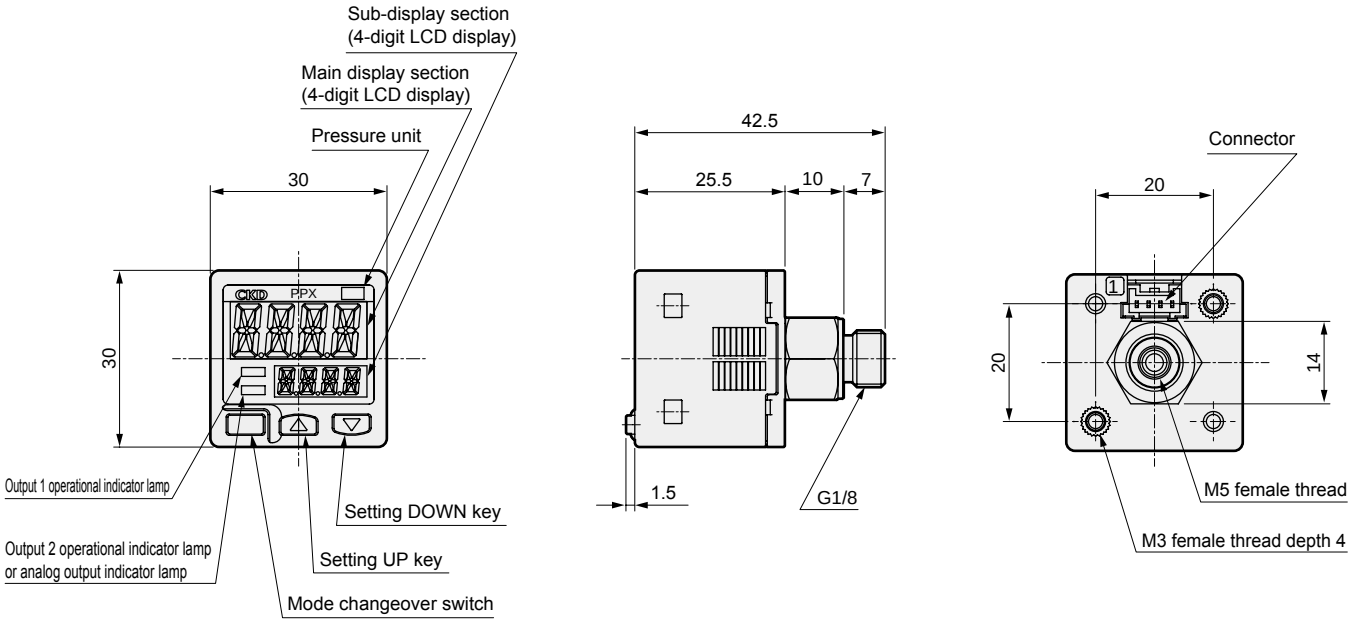

Dimensions with options

● Mounting bracket (PPX-KL)

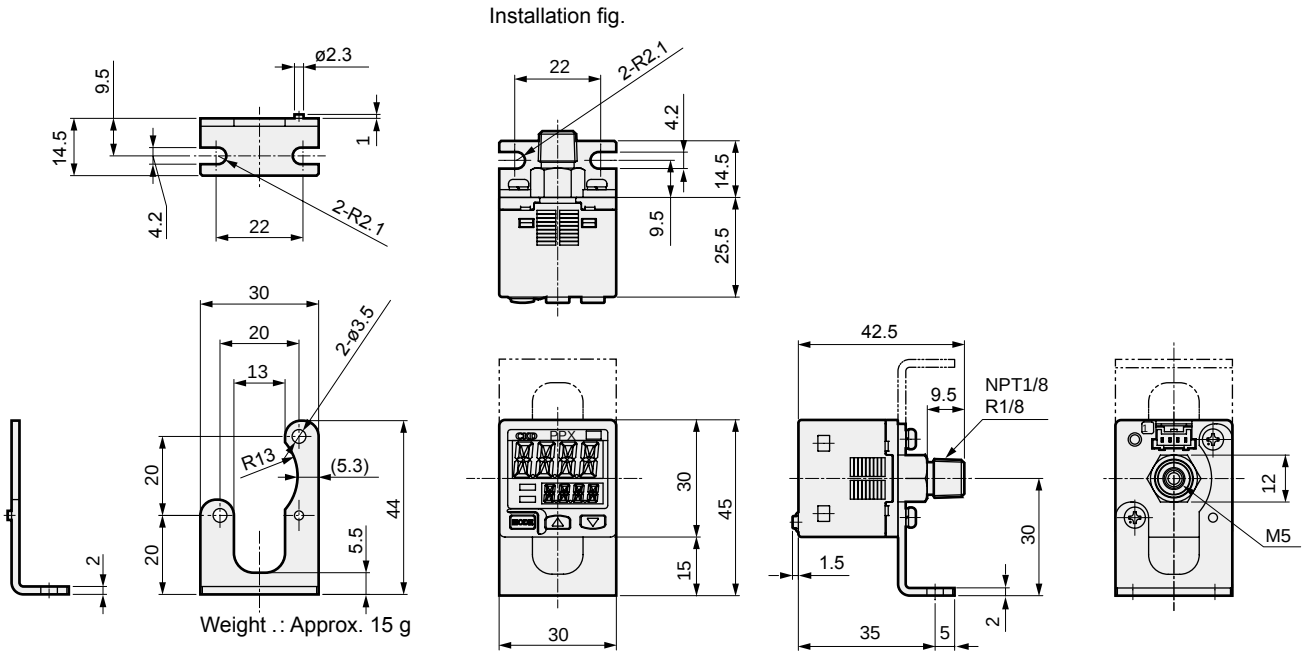

● Panel bracket (PPX-KHS) installation fig.

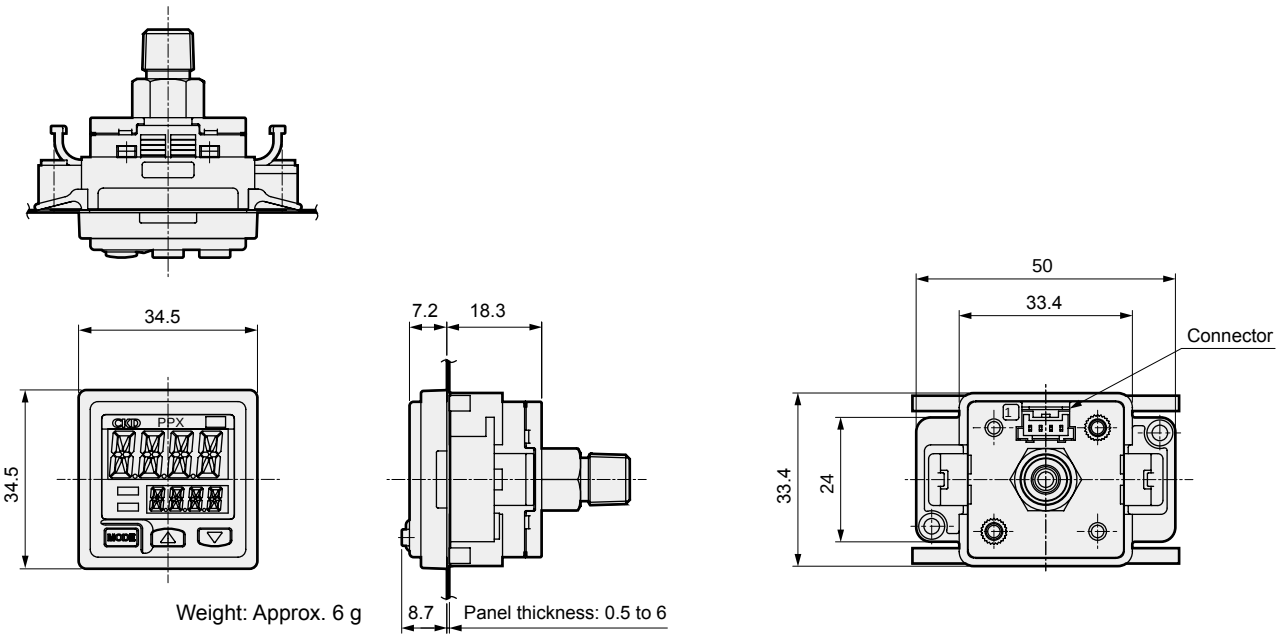

Panel cut dimension

When installing 1 pc.

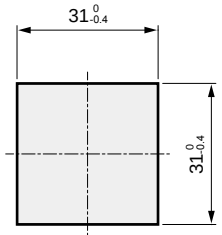

When installing consecutive n pcs. horizontally

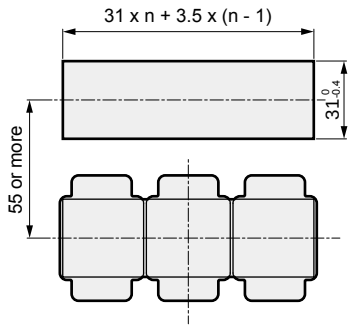

(*1): Panel thickness must be 0.5 to 6 mm.

When installing consecutive n pcs. vertically

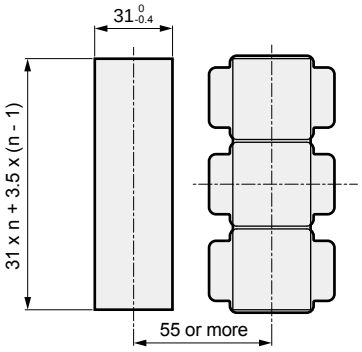

(*1): Panel thickness must be 0.5 to 6 mm.

Dimensions with options

● Front protective cover (PPX-KCB) installation fig.

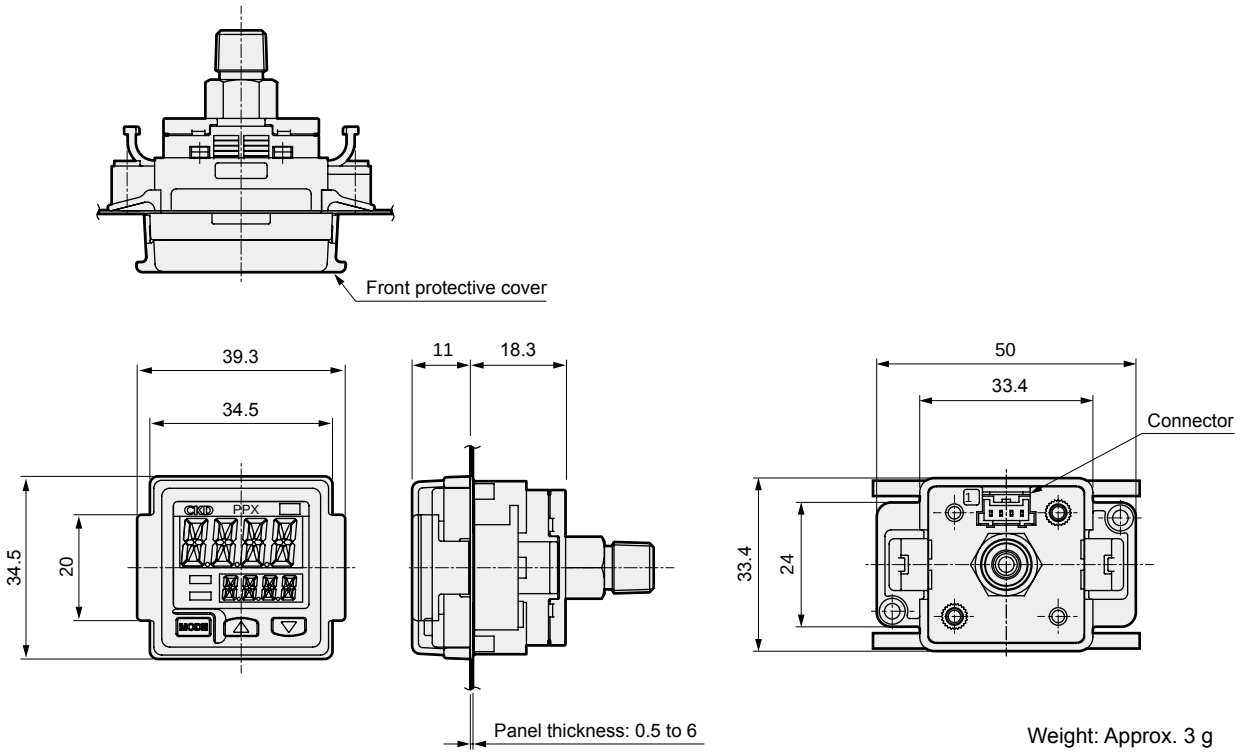

Weight: Approx. 3 g

● Cable with connector (PPX-C□)

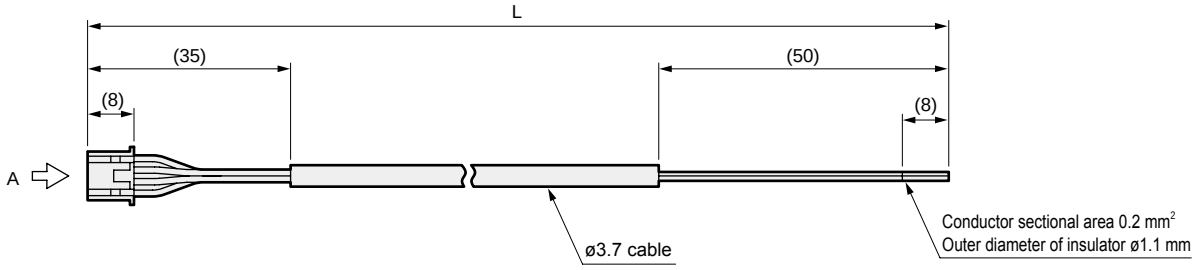

(J.S.T.)

Terminal name	Insulator color	Terminal No.
0 V	Blue	④
Standard: Comparison output 2 High-function: Analog voltage output or external input	White	③
Comparison output 1	Black	②
+V	Brown	①

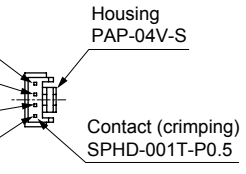

A arrow view

Model No.	Cable length	Weight g
PPX-C1	1 m	Approx. 20
PPX-C2	2 m	Approx. 40
PPX-C3	3 m	Approx. 60
PPX-C5	5 m	Approx. 100

● Connector set (PPX-CN)
- Housing : J.S.T. Mfg. Co., Ltd. PAP-04V-S
- Contact : J.S.T. Mfg. Co., Ltd. SPHD-001T-P0.5

Circuit and connection method

NPN output

● Standard

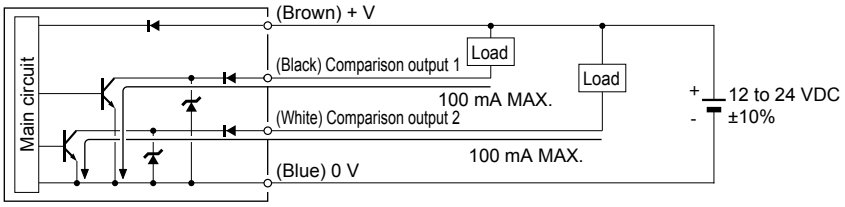

● High-function

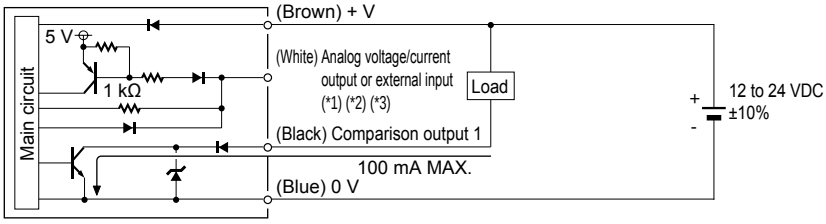

(Example of external input connection)

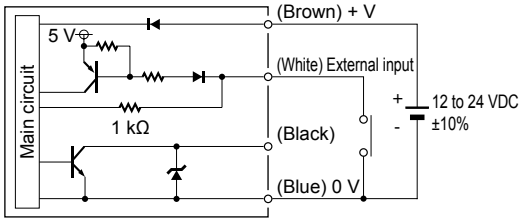

PNP output

● Standard

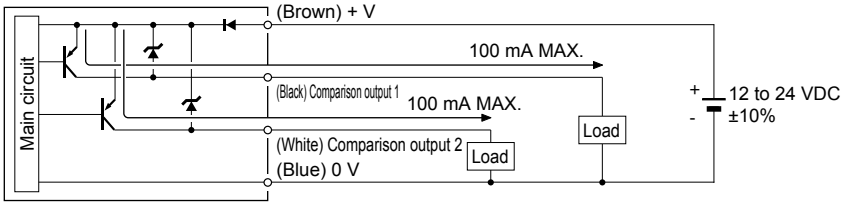

● High-function

(Example of external input connection)

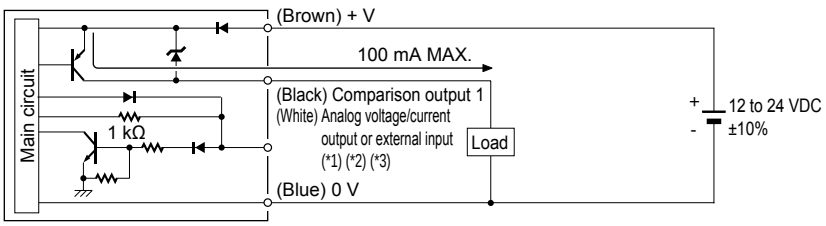

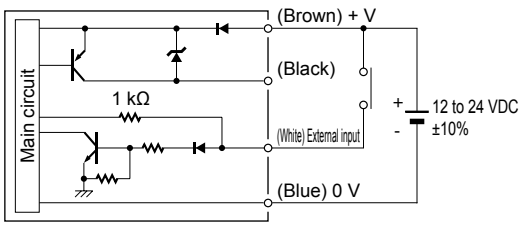

*1: Use 250 Ω (max.) for output load resistance at the time of analog current output.
*2: Note that the voltage of 5 V and over is generated at the time of analog current output.
*3: Be careful of input impedance of the connection device when using analog current output.
In addition, note that the voltage is reduced by the resistance of cable at the time of cable extension.



Digital pressure sensor oil-prohibited

PPX-P12 Series

JIS symbol 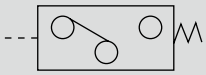

Overview

- Oil-prohibited treatment (degreasing) at gas contact areas (piping ports, etc.)
- Silicone grease-free at gas contact areas (Grease is not used on the gas contact areas)

Features

- Ideal for applications susceptible to grease, including liquid crystal, semiconductors, foodstuffs, medical use, and electronic parts.
- Because grease is not used, this type is suitable for pressure detection of paint lines.

Specifications

Specifications are the same as the standard.
Refer to page 1150 for details.

How to order

PPX - R01 N - 6M - P12

- A Pressure range
- B Output
- C Piping shape
- D Oil-prohibited specifications

Code	Description
A Pressure range	
R01	-100.0 to 100.0 kPa
R10	-0.100 to 1.000 MPa
B Output	
N	NPN transistor output 2 point
NH	NPN transistor output 1 point + analog voltage output or external input
C Piping shape	
6M	R1/8, M5 female thread
D Oil-prohibited specifications	
P12	Oil-prohibited

* 2 m connector cable included

Dimensions

Same as the standard. Refer to page 1157 for details.

Names of display/operation section

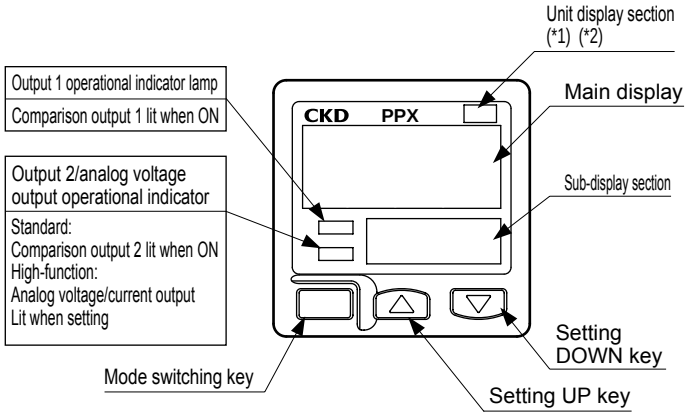

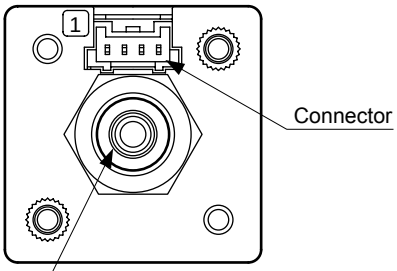

Pressure port
6M type: $R^1/_8$ + M5 female thread 6G type: $G^1/_8$ + M5 female thread 6N type: $NPT^1/_8$ + M5 female thread

(*1): For outside Japan, attach the accompanying unit switching plate corresponding to the set pressure unit.
(*2): For inside Japan, the pressure unit can be set only to "MPa" or "kPa".

Operation mode and output operation

● The selectable output modes include EASY mode, hysteresis mode, or window comparator mode for comparison output 1 and comparison output 2.
Refer to “Menu setting mode” (page 1164), switch output 1/2 output mode setting, for details.

EASY mode

● This mode is used to turn comparison output ON or OFF.

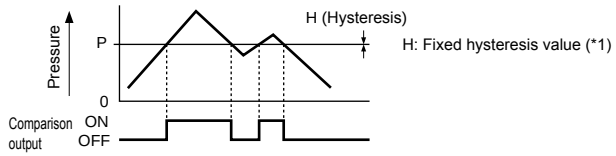

(*1): Hysteresis can be set to eight stages.
Refer to “PRO mode” (page 1167), [Changing fixed hysteresis] for details on setting.
(*2): In case of comparison output 1, “P- 1”, or in case of comparison output 2, “P-2” are displayed on the sub-display section.

Hysteresis mode

● In this mode, the comparison output hysteresis is randomly set to control the ON and OFF settings.

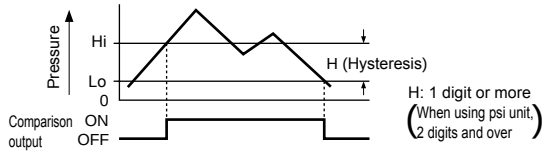

(*1): In case of comparison output 1, “HI -1”, “Lo-1”, or in case of comparison output 2, “HI -2”, “Lo-2” are displayed on the sub-display section.

Window comparator mode

● This mode is used to turn comparison output ON or OFF within the setting range.

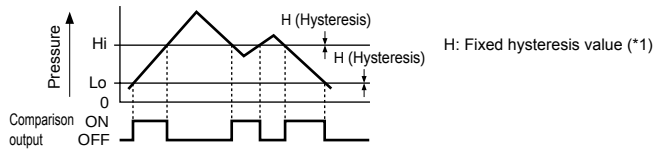

(*1): Hysteresis can be set to eight stages.
Refer to “PRO mode” (page 1167), [Changing fixed hysteresis] for details on setting.
(*2): In case of comparison output 1, “HI -1”, “Lo-1”, or in case of comparison output 2, “HI -2”, “Lo-2” are displayed on the sub-display section.
(*3): Set the setting intervals at Lo side and Hi side to the hysteresis fixed value and over.

About RUN Mode

Threshold setting

- Refer to “Menu setting mode”, [Comparison output 1/2 output mode setting], [Analog voltage/current output/external input switching] for setting method of setting conditions.
- Threshold setting is performed on the sub-display section. The main display section is not switched.

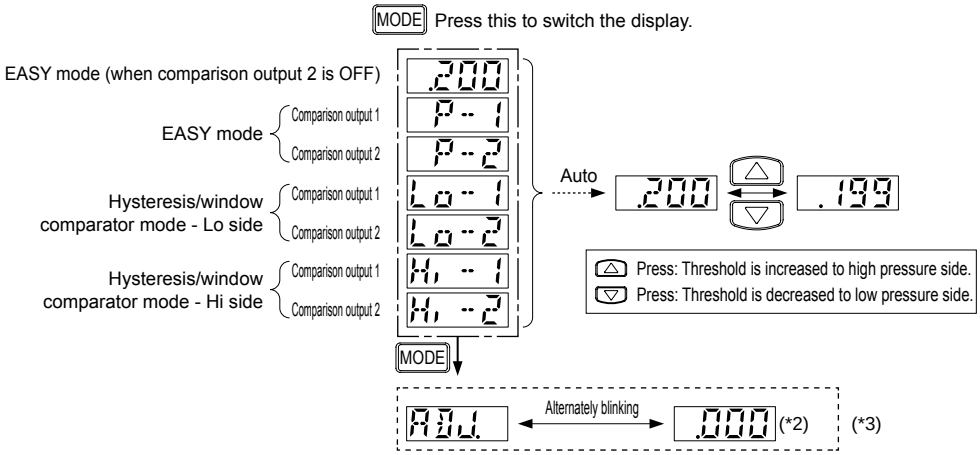

(*1): When pressure exceeding the set pressure range is applied, “UP” (exceeding the upper limit) or “DOWN” (exceeding the lower limit) is displayed by lighting on the sub-display section.
In addition, “DOWN” is displayed when the threshold at Hi side falls below the threshold at Lo side at the time of threshold setting of “Hysteresis/window comparator mode”.
(*2): Auto-reference and remote zero adjusting value are shown.
Refer to “Auto reference function” or “Remote zero adjusting function” for details.
(*3): The area inside the broken line is not displayed unless either “ZERO” or “AREF” is set when switching the external input.
Refer to “Menu setting mode”, analog voltage/current output/external input switching, for setting method.

Zero adjustment

- The zero adjustment function forcibly sets the pressure display to “zero” when the pressure port is released to atmospheric pressure.

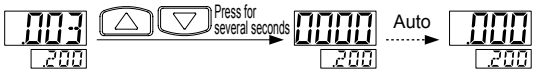

Key lock function

- The key lock function disables key operations so that conditions set for setting modes cannot be mistakenly changed.

[Setting key lock]

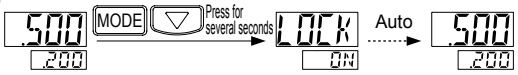

[Releasing key lock]

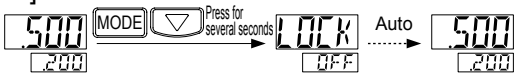

Peak/bottom hold function

- The peak and bottom hold function is to display the peak and bottom values of varying pressure.
- The peak value is displayed on the main display, and the bottom value is displayed on the sub-display section.
- The value at the high pressure side is the peak value, and the value at the low pressure side is the lowest value.

[Setting peak/bottom hold]



[Releasing peak/bottom hold]

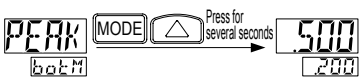

Menu setting mode

● If the mode select key is held down during setting, the RUN mode is initiated. At this time, the changed settings will come into effect.

RUN Mode

MODE Hold down for 2 seconds

[Setting comparison output 1 output mode]

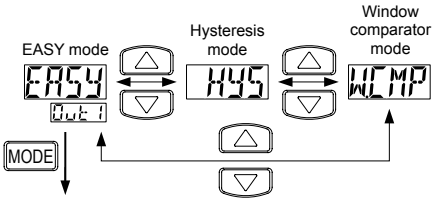

● Standard

[Setting comparison output 2 output mode] (*1)

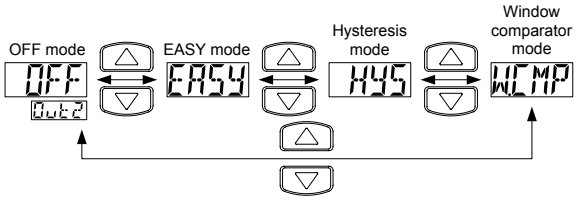

● High-function

[Switching analog voltage output/external input]

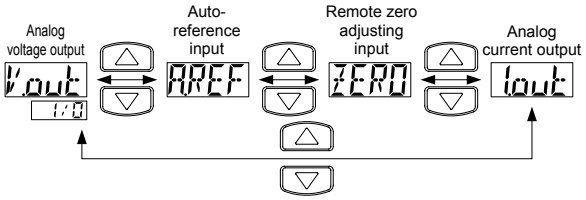

MODE

● Standard

[Switching N.O./N.C.] (*1)

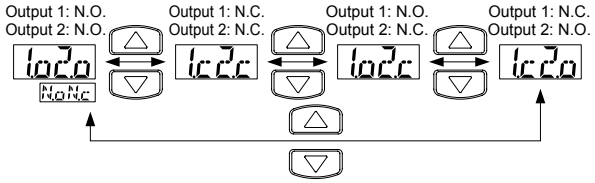

● High-function

[Switching N.O./N.C]

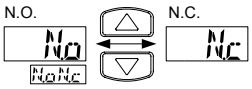

MODE

[Setting response time]

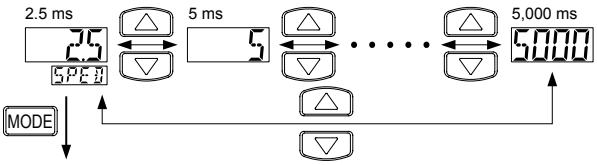

[Switching main display section display color]

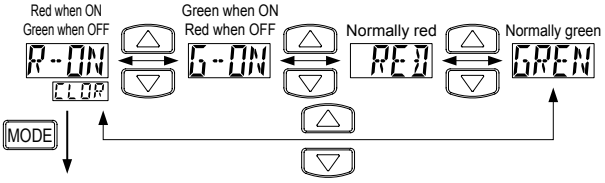

[Unit switching] (*2)

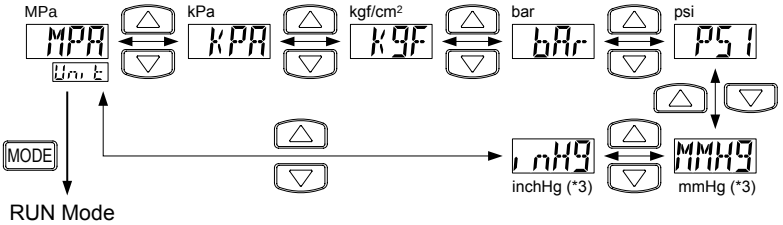

RUN Mode

(*1): If the comparison output 2 output mode setting is set to "OFF", the display at NO/NC changeover is the same as for the high-function.

(*2): For inside Japan, the pressure unit can be set only to "MPa" or "kPa". For the low pressure, the setting descriptions of unit switching are not displayed.

(*3): For the high pressure, they are not displayed.

Setting items	Initial state	Description
Setting comparison output 1 output mode	EASY	Set comparison output 1 output mode.
Setting comparison output 2 output mode (only standard)	OFF	Set comparison output 2 output mode.
Switching analog voltage output/ external input (only high-function	Vout	The item can be selected from analog voltage output, automatic reference input, or remote zero adjustment input.
Switching NO/NC	Low pressure Nc High pressure No	Set normally open (NO) or normally closed (NC).
Setting response time	25	Set the response time. Response time can be selected from 2.5 ms, 5 ms, 10 ms, 25 ms, 50 ms, 100 ms, 250 ms, 500 ms, 1000 ms, or 5000 ms.
Switching main display section display color	R-ON	Colors on the main display can be changed.
Unit switching	Low pressure KPA High pressure MPA	The pressure unit can be changed.

* NO/NC operation

NO	For EASY mode & HYS mode	For WCMP mode
	Switch is turned ON when the pressure reaches or exceeds the set value.	Switch is turned ON when the pressure is within the set value.
	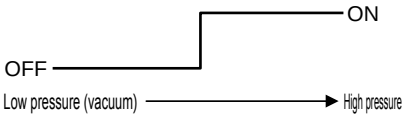	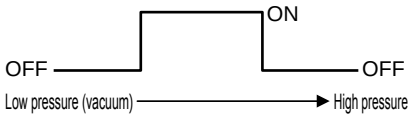
NC	For EASY mode & HYS mode	For WCMP mode
	Switch is turned ON when the pressure reaches or falls below the set value.	Switch is turned OFF when the pressure is within the set value.
	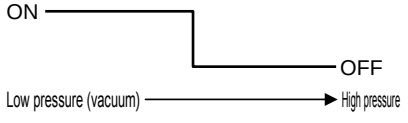	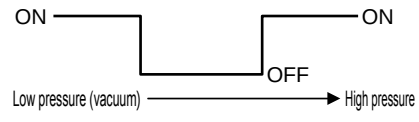

PRO mode

- If the mode select key is held down for four seconds during the RUN mode, the PRO mode is initiated.
- If the mode select key is held down during setting, the RUN mode is initiated. At this time, the changed settings will come into effect.
- The display at the left end shows defaults (factory default).

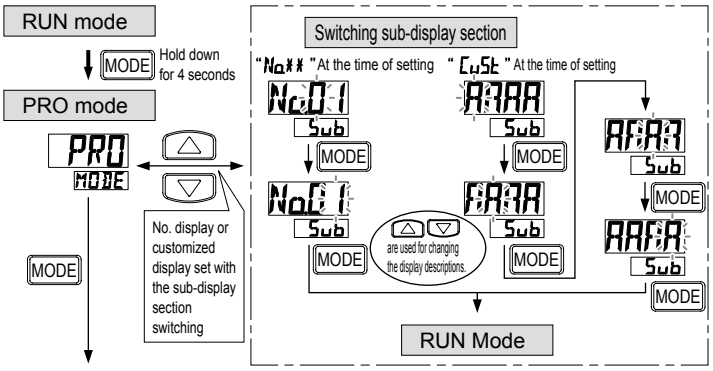

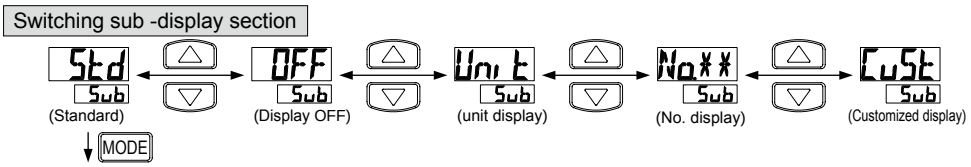

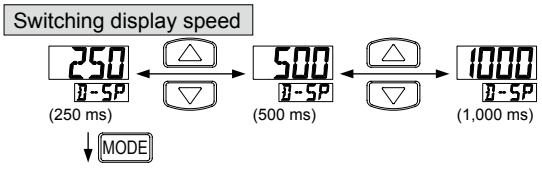

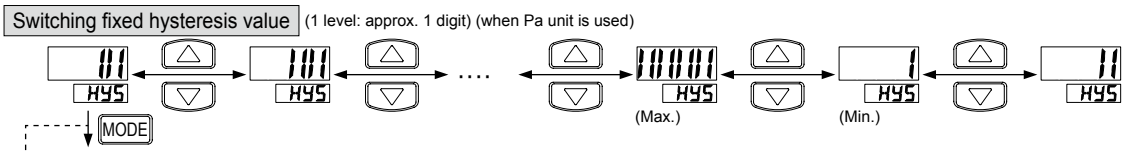

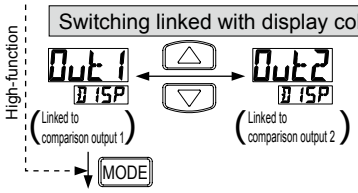

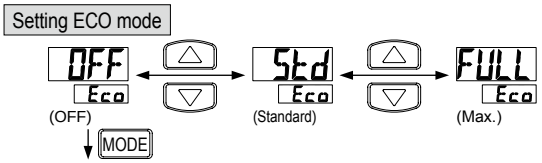

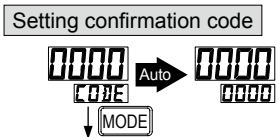

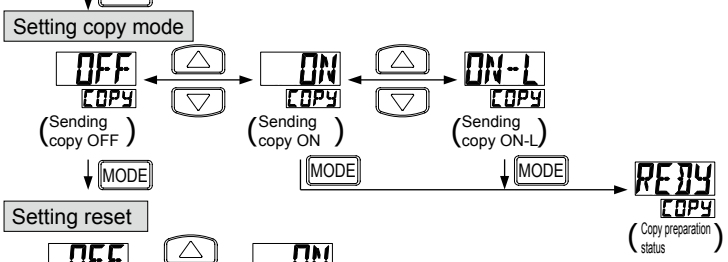

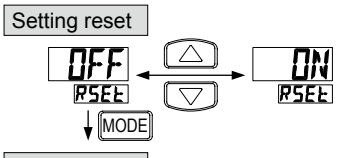

RUN mode

Setting items	Initial state	Description
Switching sub-display section	Std	Set the sub-display section for the RUN mode [OFF]: Nothing is displayed. [Unit]: Displays the current pressure unit. [No**]: Displays a random number. [CuSt]: Displays a random number, alphabetic character (some characters cannot be displayed), and code.
Switching display speed	250	Set the speed of the pressure displayed on the main display.
Switching fixed hysteresis value	111	Set hysteresis for the EASY mode and window comparator mode. (8 stages)
Switching linked with display color (only standard)	Out1	Interlinking the settings made with the main display color switching in the menu setting mode can be done with either comparison output 1 or comparison output 2.
Setting ECO mode	OFF	Power consumption can be reduced. [OFF]: Normal (ECO mode OFF) [Std]: Display is dimmed if no key is pressed for 5 seconds in RUN mode. [FULL]: Display is turned OFF if no key is pressed for 5 seconds in RUN mode. The normal display appears temporarily if any key is pressed.
Setting confirmation code	0000	Currently set details can be confirmed. Check codes in the List of Codes.
Setting copy mode	OFF	Details set for the master sensor can be copied to the slave sensor. Refer to “Setting copy function” for details. [ON]: Set details are copied. [ON-L]: Set details are copied and slave side slave sensor keys are locked.
Setting reset	OFF	Settings are returned to defaults. When pressing the mode switching key at the time of “ON”, settings are returned to defaults.

Code list

Code	1st digit		2nd digit			3rd digit	4th digit	
			Standard		High-function type			Standard only
	Compare output 1 mode	Switching NO/NC	Compare output mode	Switching NO/NC	ANLG V output/ ext. input	Threshold display	Main display/ color	Display color interlock
0	EASY	NO	OFF	OFF	Analog voltage output	P-1,Lo-1	Red when turned ON	Compare output 1
1		NC	EASY	NO	Auto-reference	Hi-1		Compare output 2
2	Hysteresis	NO		NC	Remote zero adjustment	P-2,Lo-2	Green when turned ON	Compare output 1
3		NC	Hysteresis	NO	Analog current output	Hi-2		Compare output 2
4	Window comparator	NO		NC	-	ADJ.	Normally red	Compare output 1
5		NC	Window comparator	NO	-	-		Compare output 2
6	-	-		NC	-	-	Normally green	Compare output 1
7	-	-	-	-	-	-		Compare output 2

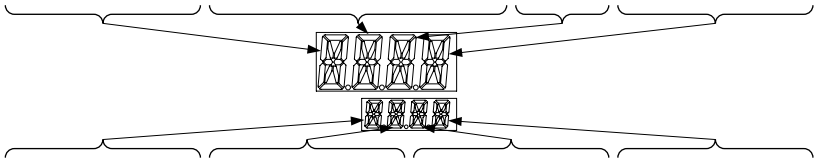

Code	5th digit	6th digit	7th digit	8th digit
	Response time	Unit switching	Display speed	Eco mode
0	2.5 ms	MPa	250 ms	OFF
1	5 ms	kPa	500 ms	Std
2	10 ms	kgf/cm^2	1,000 ms	Full
3	25 ms	bar	-	-
4	50 ms	psi	-	-
5	100 ms	mmHg	-	-
6	250 ms	inchHg	-	-
7	500 ms	-	-	-
8	1,000 ms	-	-	-
9	5,000 ms	-	-	-

Limited to export models with unit select functions.

Setting copy function

● This function copies settings from the master sensor to the slave sensor.

● Settings can be copied only between the same models.
Data cannot be copied between different models.
● The setting copy function can copy settings for one master sensor to one slave sensor.

[Installation procedure]

(1) Set the master sensor setting copy mode to Copy ON or ON-L, and press the mode select key to prepare for copying.
Refer to [Setting copy mode] in “PRO mode” (page 1166), for details.
(2) Turn master sensor power OFF.
(3) Connect the master sensor to the slave sensor as shown below.

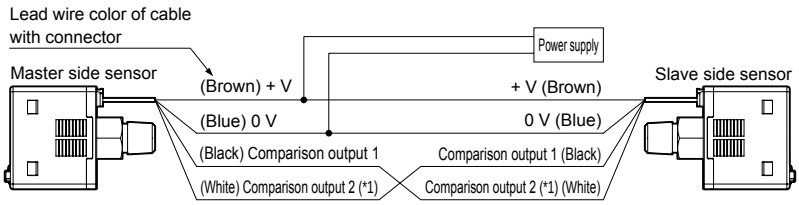

*1: Analog voltage output and external input are connected for the high-function.

(4) Turn ON the power for the master sensor and slave sensor simultaneously. (*2) (*3)
(5) Setting details are encoded in 16-bit code and displayed in orange on the main sensor display, after which copying begins.
(6) The same code as in the procedure (5) is displayed in green on the slave sensor’s main display, and “Ok” is displayed on the sub-display section when copying finishes.
(7) Turn master sensor and slave sensor power OFF, and disconnect wires.
* To continue copying settings for a different sensor, repeat steps (3) to (6).

(*2): Set details may not be copied if sensor power is not turned ON simultaneously.
(*3): Pulse output is output to comparison output 1 when power is turned ON.

[Canceling master sensor setting copy mode]

(1) Turn the master sensor power ON (with slave sensor wiring disconnected).
(2) Press the mode select key for 2 seconds.

Automatic reference function (high-function only)

● The automatic reference function compensates for the setting using the pressure detected at automatic reference input as the reference pressure.
● Setting value (1)’ is automatically compensated for as “setting value (1) + P (a)” using pressure value P (a) detected during automatic reference input as the reference.

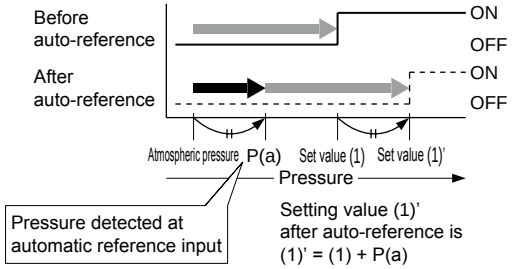

Valid setting range and set pressure range after compensation

● The set pressure range is wider than the rated pressure range to comply with the automatic reference function.

When using automatic reference input, if the compensated setting value exceeds the set pressure, the setting is automatically compensated to within the set pressure range. Check that the set pressure is not exceeded.

Operation chart

[Normal (NO setting for each comparison output)]

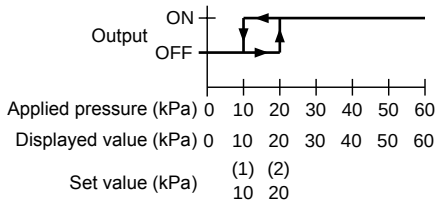

[At auto-reference input (NO setting for each comparison output)]

· Detection pressure when auto-reference input: 10 kPa
· Output mode: hysteresis mode

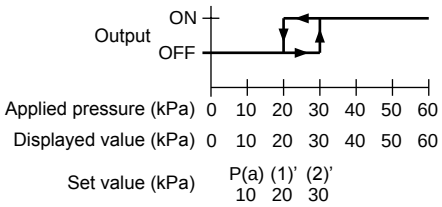

(*1): The setting shifts the same way in EASY and window comparator modes.

- The pressure detected at automatic reference input is set to zero when the setting for the analog voltage output/external input select function is set or power is turned ON again.
- The automatic reference input can be confirmed when the RUN mode threshold is set.
  Refer to “Threshold setting” in “RUN mode” (page 1163) for details.

Remote zero adjusting (high-function only)

- The remote zero adjustment function forcibly sets the pressure to zero when the external signal is input.

The setting is not compensated for when remote zero adjustment is input. Check that pressure and setting for the remote zero adjustment function do not exceed the set pressure.

Operation chart

[Normal (NO setting for each comparison output)]

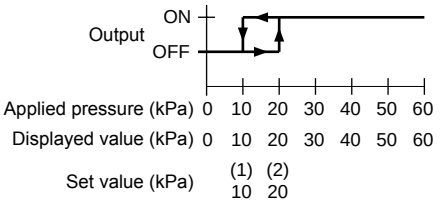

[Pressure for remote zero adjusting input (NO setting for each comparison output)]

· Pressure for remote zero adjusting input: 10 kPa
· Output mode: hysteresis mode

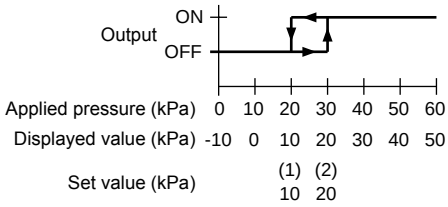

(*1): The setting shifts the same way in EASY and window comparator modes.

- The remote zero adjustment function is cleared to zero when the setting for the analog voltage output/external input select function is set or power is turned ON again, and operation returns to normal using atmospheric pressure as a reference. The remote zero adjustment can be confirmed when the RUN mode threshold is set.
  Refer to “Threshold setting” in “RUN mode” (page 1163) for details.

Error display

Error display	Description	Treatment
E-1	The load was short-circuited and overcurrent flowed.	Turn power OFF and check the load.
E-3	Pressure was applied during zero point adjustment.	Release pressure applied to the pressure port to atmospheric pressure and adjust the zero point again.
E-4	External input is conducted outside the rated pressure range.	Return applied pressure to within the rated pressure.
E-5	Communication error (disconnection, connection fault, etc.)	When using the copy function, check wiring.
E-6	Communication error (different models)	When using the copy function, confirm that the same models are used.
10.0	Applied pressure exceeds the max. display pressure range.	Return applied pressure to within the rated pressure.
-10.0	Applied pressure exceeds the min. (reverse pressure) display pressure range.	

Setting operation example EASY mode

(*1): This is an example of settings from the default when purchased (factory default).
(*2): If setting conditions are unclear, reset the settings in PRO mode, reset to default mode, then start use.

● Suction confirmation

- EASY mode

R01 (-100.0 to 100.0 kPa)

· Mode when powered ON Start from the (RUN mode).
· In a mode other than RUN mode, hold down the “MODE” key and enter the RUN mode.

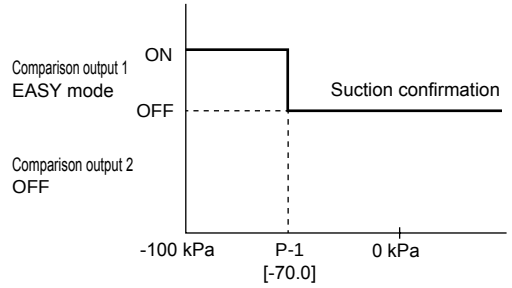

RUN mode screen

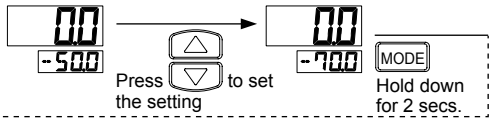

Menu setting mode screen

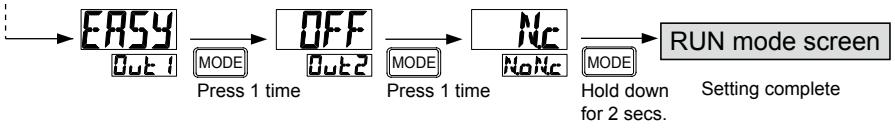

● Suction confirmation + vacuum burst confirmation

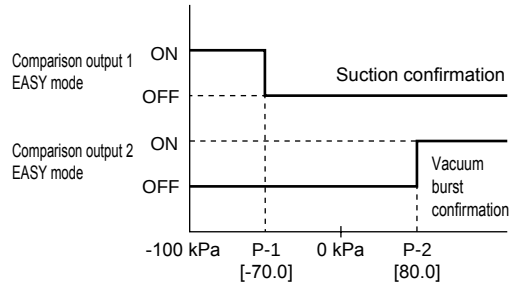

RUN mode screen

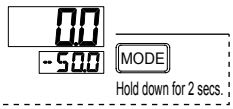

Menu setting mode screen

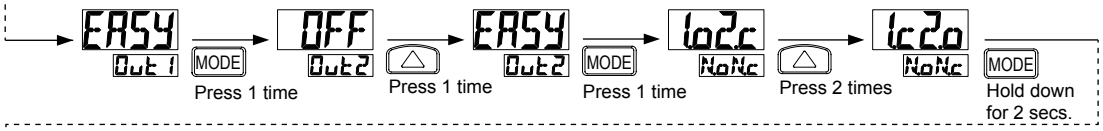

RUN mode screen

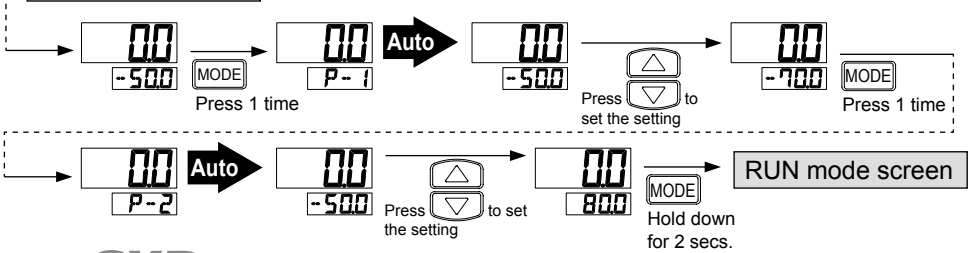

Setting operation example HYS mode (hysteresis mode)

(*1): This is an example of settings from the default when purchased (factory default).
(*2): If setting conditions are unclear, reset the settings in PRO mode, reset to default mode, then start use.

● Suction confirmation

- HYS mode (hysteresis mode)

R01 (-100.0 to 100.0 kPa)

· Mode when powered ON Start from the (RUN mode).
· In a mode other than RUN mode, hold down the “MODE” key and enter the RUN mode.

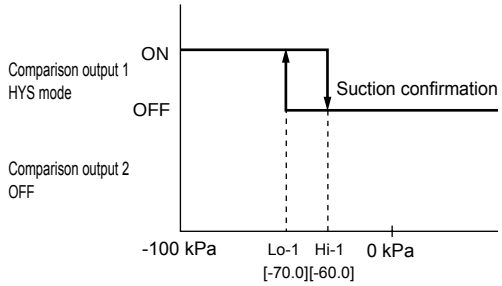

RUN mode screen

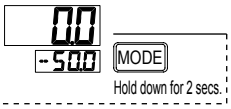

Menu setting mode screen

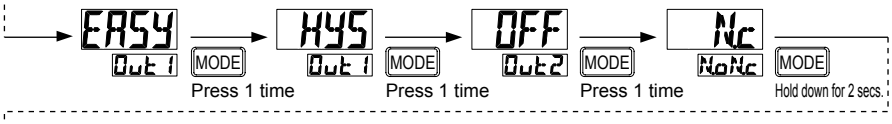

RUN mode screen

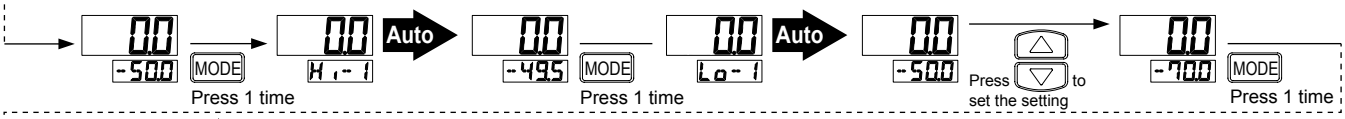



● Suction confirmation + vacuum burst confirmation

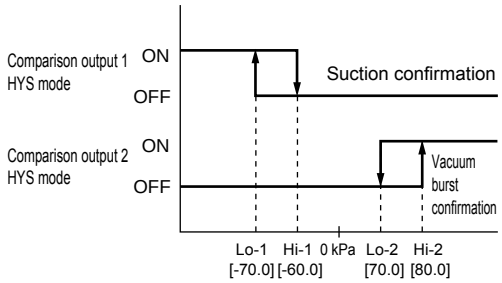

RUN mode screen

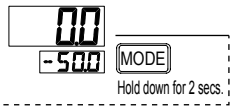

Menu setting mode screen

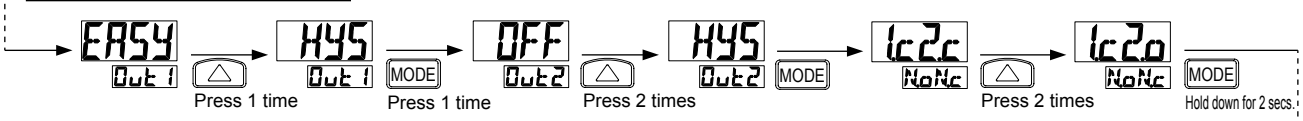

RUN mode screen

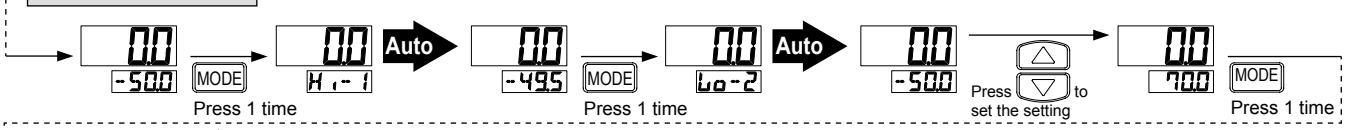

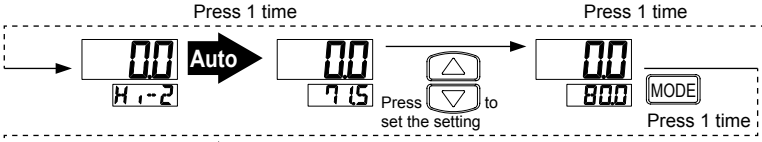

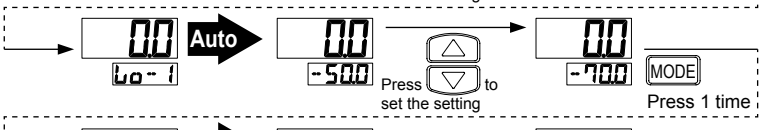

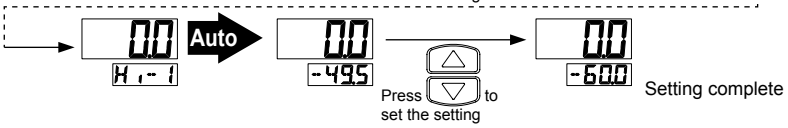

Setting operation example WCMP mode (window comparator mode)

(*1): This is an example of settings from the default when purchased (factory default).
(*2): If setting conditions are unclear, reset the settings in PRO mode, reset to default mode, then start use.

● Checking source pressure

- WCMP mode (window comparator mode)

R10 (-0.100 to 1.000 MPa)

· Start from the mode (RUN mode) enabled when power is turned ON.
· In a mode other than RUN mode, hold down the “MODE” key and enter the RUN mode.

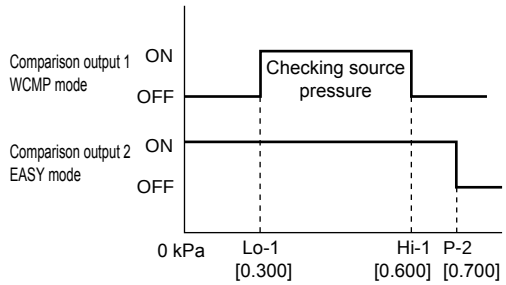

RUN mode screen

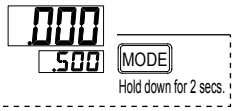

Menu setting mode screen

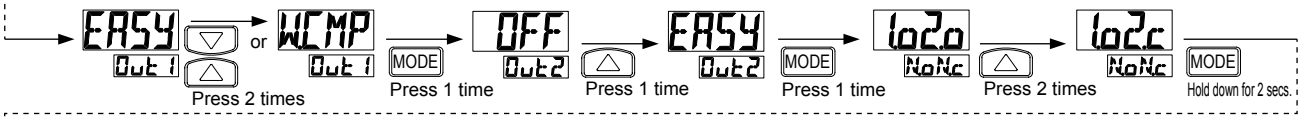

RUN mode screen

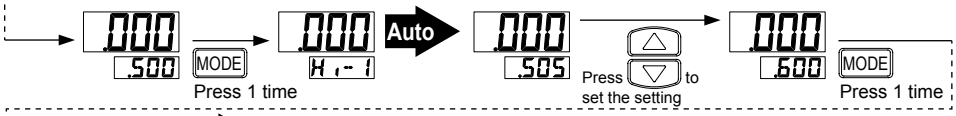

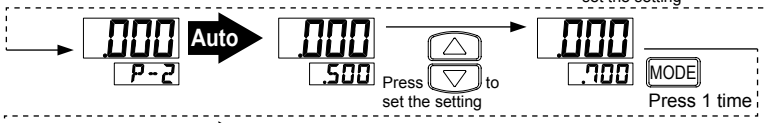

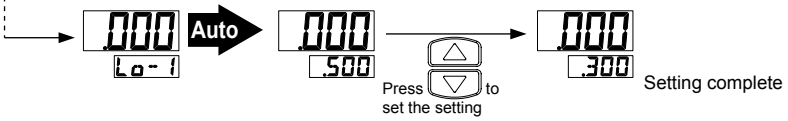

MEMO

Easy use with wide variations!!

Common operations are used for both the sensor integrated and separated to help users.
IP65 drip-proof structure provides outstanding reliability even in adverse environments.
Full-range coupling pressure allows measurement of pressure from vacuum to positive pressure.

Sensor integrated



· A wide selection of port shapes

● Rc1/8 2-direction port (Rear side/down direction)

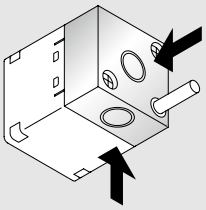

(Port) (-6B)

● Rc1/8 through port (Lateral)

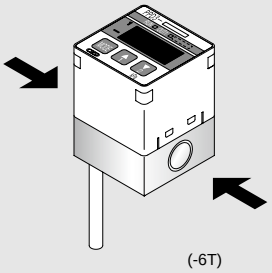

(-6T)

● ø6 push-in fitting (Down direction)

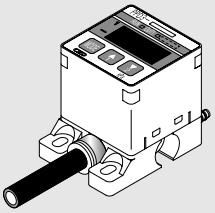

(-6HD)

● ø6 push-in fitting through port (Lateral)

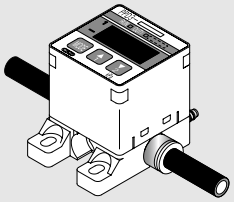

(-6HT)

Sensor separated



* PPD3-KHS-D mounted state

Freely combine displays and sensors!!



Just insert into the terminal block to connect!!

Semiconductor sensor

Stainless steel diaphragm sensor

● R1/8



(Port) (-6)

● ø6 push-in fitting



(-H6)

● ø6 plug



(-H6-B)

● Rc1/8



(-6B)

● Select by application

Both sensor integrated and sensor separated are available.

· Pressure can be easily adjusted and checked (sensor integrated).
· Remote processing is possible (sensor separated).

● Use general air with stainless steel diaphragm sensor.

Stainless steel diaphragm and semiconductor sensors are available.

· Sensors can be used based on air-line quality.
· All sensors have IP65-compliant drip-proof structures.

● Easy-to-use pressure port lineup

· Resin ports with push-in fittings (6HD, 6HT, H6) are available.
These lightweight ports help save space.
· Through-port (6T, 6HT, H6) are available.
Ideal for suction and seating confirmation.
Can be installed using minimal piping space.

● Ample functions

Convenient functions such as a peak hold function, switch waveform display, forcible switch function, and pressure gauge reading function make equipment settings more efficient.

● Peak hold

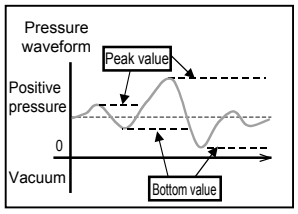

● Switch waveform display

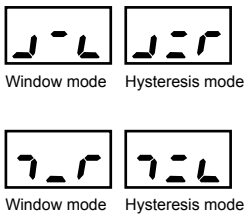

● Various mounting bracket options! Sold separately

Can be installed anywhere.

● L shaped mounting

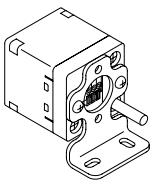

● Parallel mounting

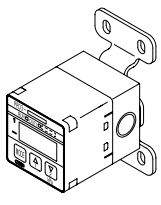

● Panel mounting

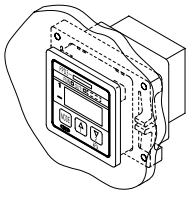

● Operation protective cover

Use this cover to protect the display panel and prevent incorrect input.

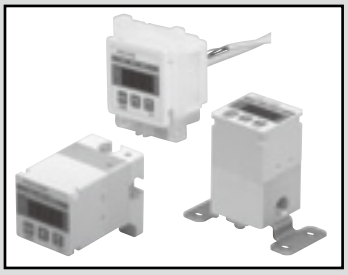

Electronic pressure switch with digital display (pressure switch)

PPD3-S Series

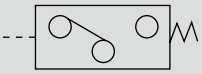

Overview

Pressure switch PPD3-S Series is ideal for pneumatic lines.
Due to various port options, in addition to source pressure confirmation, suction confirmation and contact confirmation, etc., are possible.

Features

- Models can be easily replaced in response to worsened or improved air-line conditions.
- Push-in fitting resin ports (6HD/6HT/H6) are available. These lightweight ports help save space.
- Through ports (6T/6HT/H6) are available. Ideal for suction and seating confirmation. Can be installed using minimal piping space.
- Convenient functions such as peak hold function, forcible switch function, and pressure gauge reading function make equipment setting more efficient.
- CE marking compatible.

Sensor integrated specifications

1 MPa ≈ 145.0 psi, 1 MPa = 10 bar

Item	PPD3-S		
	R10	R03	R01
Pressure sensitive element	Single stainless steel diaphragm pressure sensor		
Applicable fluids	Air/non-corrosive gas/compressed air (including water and drain)		
Rated pressure	-100 (≈-14 psi, -1 bar) to 980 kPa (≈142 psi, 9 bar)	-100 (≈-14 psi, -1 bar) to 300 kPa (≈43 psi, 3 bar)	-100 (≈-14 psi, -1 bar) to 100 kPa (≈14 psi, 1 bar)
Display unit	kPa	kPa	kPa
Min. display unit *1	1 kPa (≈145 psi, 10 bar)		
Proof pressure	2 MPa (≈290 psi, 20 bar)	0.6 MPa (≈87 psi, 6 bar)	0.6 MPa (≈87 psi, 6 bar)
Display accuracy (25°C)	±2% F.S.		±3% F.S.
Temperature characteristics (0 to 50°C)	±4% F.S.		±5% F.S.
Leak rate	1 cm^3/min (ANR) or less		
Display	3-digit LED display character height 8 mm		
Power supply voltage	12 to 24 VDC ± 10% (ripple rate 1% or less)		
Current consumption	50 mA or less (60 mA or less for sensor separated)		
Switch output	Sensor integrated: N: NPN transistor open collector output 2 points P: PNP transistor open collector output 2 points NA: NPN transistor open collector output 1 point + analog output 1 point PA: PNP transistor open collector output 1 point + analog output 1 point		
Switch output current	50 mA or less		
Switch output voltage drop value	2.4 V or less		
Switch output response time	Approximately 5 msec		
Analog output	1 to 5 ±0.1 V load impedance: 10 kΩ or more		
Set value hold	EEPROM		
Lead wire	Body: Oil resistant vinyl cable 4-conductor (0.3 mm^2 insulator outer diameter ø1.1) 1 m		
Ambient temperature	0 (32°F) to 50°C (122°F)		
Ambient humidity	0 to 85%RH (no condensation)		
Vibration resistance	10 to 55 Hz compound amplitude 1.5 mm 2 hours per X, Y, Z direction		
Degree of protection	IP65 equiv. *2 (IP40 equivalent only for display section of sensor separated)		
Protection circuit *3	Power reverse connection protection, switch output reverse connection protection, switch output load short-circuit protection		
Weight	PPD3-S-R□-6B: approx. 105 g		

*1 : This indicates min. display unit, and does not guarantee display accuracy.
*2 : When an atmosphere introduction port is machined (refer to page 1228).
*3 : This product's protection circuit is effective only for specific misconnections and load short-circuits. It does not provide protection for all misconnections.

Clean-room specifications (Catalog No. CB-033SA)

- Anti-dust generation structure for use in cleanrooms

Circuit diagram and connection method
Refer to page 1187.

PPD3-S -.....- P7*

PPD3-S -.....- P8*

PPD3-S- .....- P9*

How to order

● Sensor integrated

PPD3-S - **R03** **NA** - **6T**

Stainless steel diaphragm sensor

Ⓐ Pressure range

Ⓑ Output

Ⓒ Port

Code	Description
Ⓐ Pressure range	
R10	-100 to 980 kPa
R03	For -100 to 300 kPa
R01	For -100 to 100 kPa
Ⓑ Output	
N	NPN transistor output 2 points
P	PNP transistor output 2 points
NA	NPN transistor output 1 point + analog output 1 point
PA	PNP transistor output 1 point + analog output 1 point
Ⓒ Port	
6B	Rc1/8, 2 direction port rear side, lower outlet
6T	Axial Rc1/8, through port both sides outlet
6HD	Lightweight port with 6 mm push-in fitting (downward)
6HT	Lightweight through port with two 6 mm push-in fittings (horizontal both sides)

⚠ Precautions for model selection

Mounting brackets and kits are not included with the body.
Available separately. Refer to the "Mounting brackets and kits" model numbers on the following page.

● Mounting bracket and kit
Refer to page 1180.



Electronic pressure switch with digital display (pressure switch)

PPD3/PPD3-S Series

Sensor separated

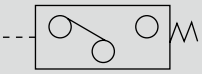

Overview

Pressure switch PPD3 Series is ideal for pneumatic lines.
Due to various port options, in addition to source pressure confirmation, suction confirmation and contact confirmation, etc., are possible.

Features

- Semiconductor pressure sensor and stainless steel diaphragm pressure sensor available as a series.
- Convenient functions such as a peak hold function, forcible switch function, and pressure gauge reading function make equipment settings more efficient.
- CE marking compatible.

Sensor separated specifications

1 MPa ≈ 145.0 psi, 1 MPa = 10 bar

Item	PPD3			PPD3-S		
	R10	R03	R01	R10	R03	R01
Pressure sensitive element	Diffused semiconductor pressure sensor			Single stainless steel diaphragm pressure sensor		
Applicable fluid	Air/non-corrosive gas			Air/non-corrosive gas/compressed air (including water and drain)		
Rated pressure	-100 to 980 kPa	-100 to 300 kPa	-100 to 100 kPa	-100 to 980 kPa	-100 to 300 kPa	-100 to 100 kPa
Display unit	kPa	kPa	kPa	kPa	kPa	kPa
Min. display unit *1	1 kPa (≈0.2 psi, 0.01 bar)					
Proof pressure	1.5 MPa	0.6 MPa	0.2 MPa *2	2 MPa	0.6 MPa	0.6 MPa
Display accuracy (25°C)	±2% F.S.					±3% F.S.
Temp (0 to 50°C)	±4% F.S.					±5% F.S.
Leak rate	1 cm^3/min (ANR) or less					
Display	3-digit LED display character height 8 mm					
Power supply voltage	12 to 24 VDC ± 10% (ripple rate 1% or less)					
Current consumption	60 mA or less					
Switch output	NA: NPN transistor open collector output 2 points + analog output 1 point PA: PNP transistor open collector output 2 points + analog output 1 point					
Switch output current	50 mA or less					
Switch output voltage drop value	2.4 V or less					
Switch output response time	Approximately 5 msec					
Analog output	1 to 5 ±0.1 V load impedance: 10 kΩ or more					
Set value hold	EEPROM					
Lead wire	Body: oil resistance vinyl cable (5-conductor 0.2 mm^2 insulator outer diameter ø1.0) Sensor section of sensor separated: oil resistance vinyl cable 3-conductor (0.15 mm^2 insulator outer diameter ø1.0) 3 m					
Ambient temperature	0 (32°F) to 50 (122°F)°C					
Ambient humidity	0 to 85%RH (no condensation)					
Vibration resistance	10 to 55 Hz compound amplitude 1.5 mm 2 hours per X, Y, Z direction					
Degree of protection	IP65 equiv. (IP40 equivalent only for display section of sensor separated)					
Protection circuit *3	Power reverse connection protection, switch output reverse connection protection, switch output load short-circuit protection					
Weight	PPD3-R□D-6: approx. 100 g			PPD3-S-R□D-6B: approx. 115 g		

*1 : This indicates min. display unit, and does not guarantee display accuracy.
*2 : Sensor separated is 0.3 MPa.
*3 : This product's protection circuit is effective only for specific misconnections and load short-circuits. It does not provide protection for all misconnections.

Clean-room specifications (Catalog No. CB-033SA)

- Anti-dust generation structure for use in cleanrooms

PPD3-.....**-P7***

PPD3-.....**-P8***

PPD3-.....**-P9***

Circuit diagram and connection method

Refer to page 1187.

How to order

● Sensor separated

PPD3 - R03 NA D - H6

Ⓐ Sensor
Ⓑ Pressure range
Ⓒ Output
Ⓓ Port

Code	Description	
Ⓐ Sensor		
PPD3	Semiconductor sensor	
PPD3-S	Stainless steel diaphragm sensor	
Ⓑ Pressure range		
R10	-100 to 980 kPa	
R03	-100 to 300 kPa	
R01	-100 to 100 kPa	
Ⓒ Output		
NA	NPN transistor output 2 points + analog output 1 point	
PA	PNP transistor output 2 points + analog output 1 point	
Ⓓ Port		
6	R1/8	For PPD3 (semiconductor sensor)
H6	6 mm push-in fitting	
H6-B	6 mm plug	
6B	Rc1/8	For PPD3-S (stainless steel diaphragm sensor)

⚠ Precautions for model selection

Mounting brackets and kits are not enclosed with the body.
They are available separately. Refer to the “Mounting brackets and kits” model numbers on the next page.

● Model No. of single display

Example) PPD3 - R10 NA D (Select from the table at right for model No. of item Ⓑ/Ⓒ)

Ⓐ Sensor
Ⓑ Pressure range
Ⓒ Output

● Discrete sensor model No.

Example) PPD3 - R03 A - H6 (Select from the table at right for model No. of item Ⓐ/Ⓑ/Ⓓ)

Ⓐ Sensor
Ⓑ Pressure range
Ⓓ Port

● Mounting bracket and kit
Refer to page 1180.

● Mounting bracket and kit

PPD3 - KL - D

Ⓐ Model No.

Ⓑ Shape

Code	Description
Ⓐ Model No.	
PPD3-KL	One side mounting foot (L shaped mounting) (mounting screw attached)
PPD3-KD	Both sides mounting foot (parallel mounting) (mounting screw attached)
PPD3-KHS	Panel mounting bracket set, with guard (ø6 push-in fitting attached for integrated)
PPD3-KC	Operation protective cover *1
Ⓑ Shape	
Blank	Sensor integrated *2
D	Sensor separated

*1 Because PPD3-KC is common for integrated and separated sensors, indicate Blank for Ⓑ Shape when selecting PPD3-KC for the sensor separated.
*2 This panel mounting method applies for port "6B". It cannot be used with other ports.

Analog output voltage - pressure characteristics

● PPD3-S-R10NA
R10PA
R10A

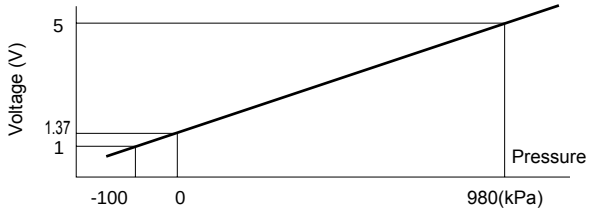

● PPD3-S-R03NA
R03PA
R03A

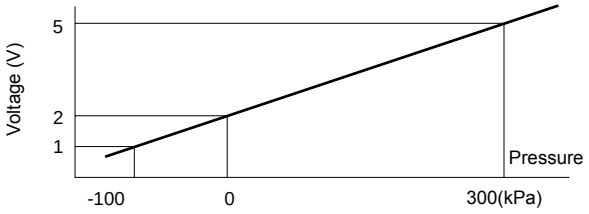

● PPD3-S-R01NA
R01PA
R01A

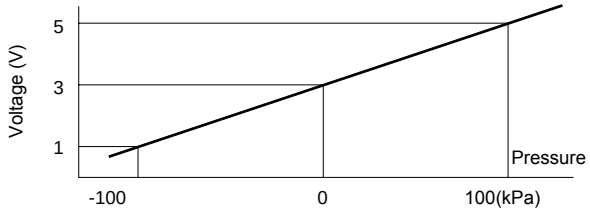

[Precautions]

● Analog output accuracy is affected by temperature characteristics and heat generated when energized. Be sure to provide a standby time of 5 minutes and over after power is turned ON when using.

Dimensions

Sensor separated (display)

● PPD3-*****-D (display)

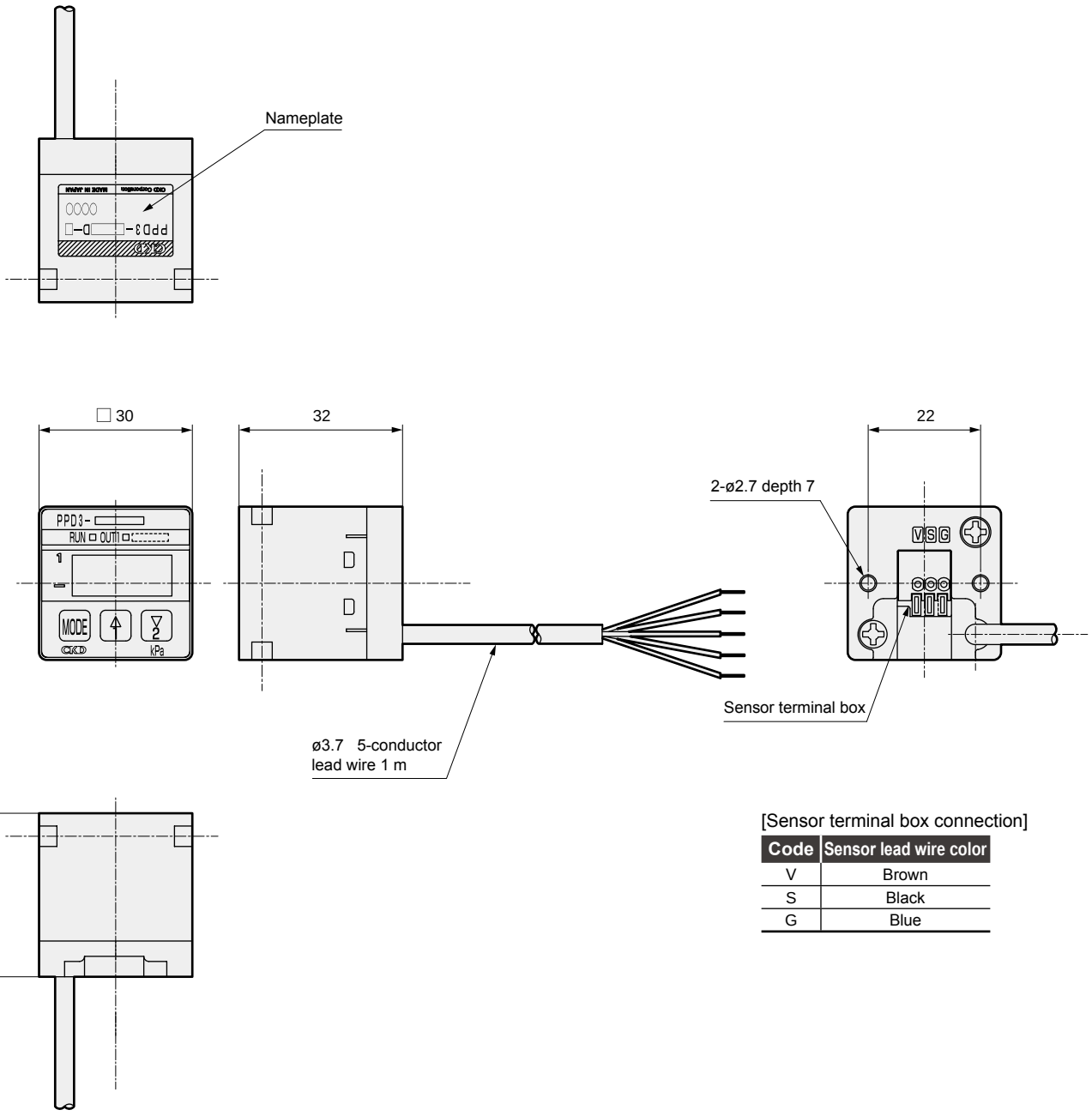

[Sensor terminal box connection]

Code	Sensor lead wire color
V	Brown
S	Black
G	Blue

Internal structure and parts list

Sensor separated (semiconductor sensor)

- PPD3-R**D-6
- PPD3-R**A-6 (discrete sensor model No.)
- PPD3-R**D-H6-B
- PPD3-R**A-H6-B (discrete sensor model No.)
- PPD3-R**D-H6
- PPD3-R**A-H6 (discrete sensor model No.)

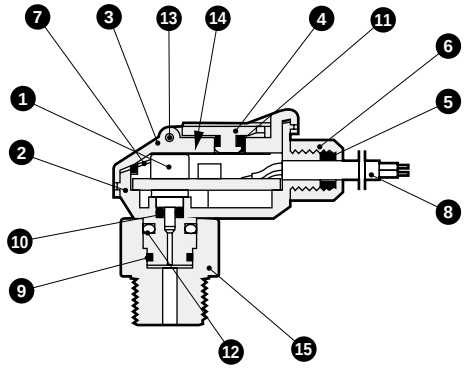

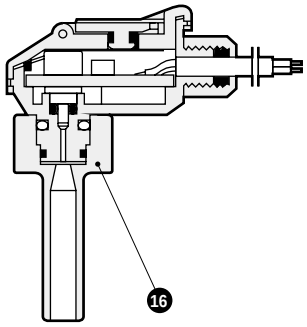

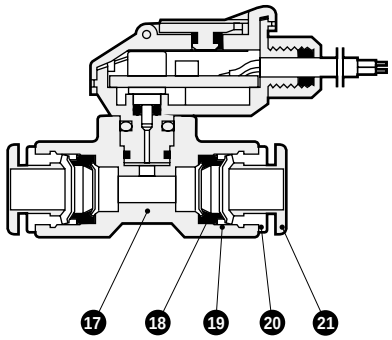

Cannot be disassembled

No.	Part name	Material	No.	Part name	Material
1	Pressure sensor	Diffusion semiconductor strain gauge	12	Stopper	Stainless steel
2	Body	Polybutylene terephthalate (glass fiber 30%)	13	Spring pin	Stainless steel
3	Cover	Polycarbonate	14	Shield sheet	Aluminum
4	Trimmer guard	Polycarbonate	15	R1/8	Polybutylene terephthalate (glass fiber 30%)
5	Bush	Nitrile rubber	16	Plug	Polybutylene terephthalate (glass fiber 30%)
6	Bush holder	Aluminum	17	Push-in fitting	Polybutylene terephthalate
7	Cover gasket	Silicone rubber	18	Packing	Nitrile rubber
8	Lead wire (3 m)	Polyvinyl chloride	19	Chuck	Copper alloy (electroless nickeling)
9	O-ring	Nitrile rubber	20	Outer ring	Copper alloy (electroless nickeling)
10	O-ring	Nitrile rubber	21	Push ring	Polyacetal
11	O-ring	Nitrile rubber			

Dimensions

Sensor separated (semiconductor sensor)

- PPD3-R**D-6
- PPD3-R**A-6 (discrete sensor model No.)
- PPD3-R**D-H6-B
- PPD3-R**A-H6-B (discrete sensor model No.)
- PPD3-R**D-H6
- PPD3-R**A-H6 (discrete sensor model No.)

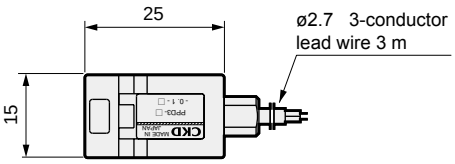

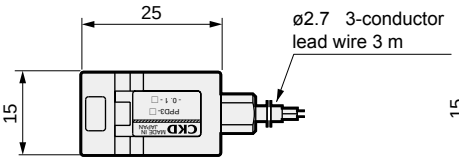

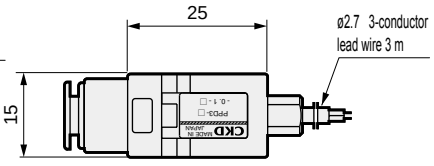

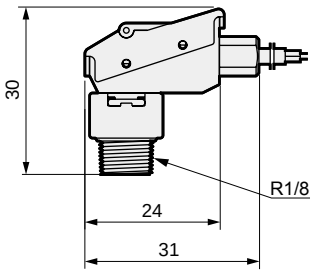

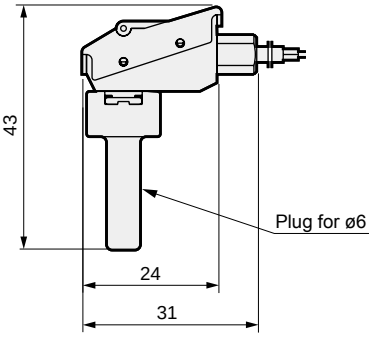

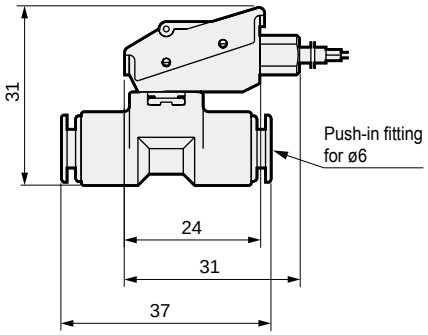

Internal structure and parts list

Sensor separated (stainless steel diaphragm sensor)

- PPD3-S-R**D-6B
- PPD3-S-R**A-6B (discrete sensor model No.)

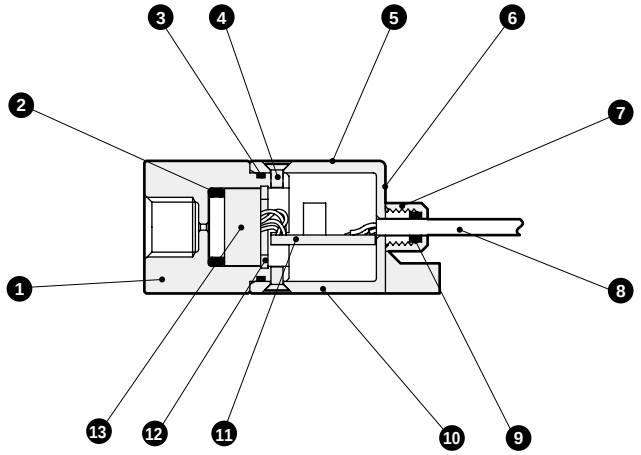

Cannot be disassembled

No.	Part name	Material	No.	Part name	Material
1	Pressure port	Aluminum	8	Lead wire (3 m)	Polyvinyl chloride
2	O-ring	Fluoro rubber	9	Bush	Nitrile rubber
3	O-ring	Nitrile rubber	10	Sensor body	Polybutylene terephthalate (glass fiber 30%)
4	Flat head screw	SUSXM7	11	Amplifier board	Glass epoxy resin
5	Nameplate	Polyester film	12	C ring for hole	Stainless steel
6	Light sheet	Polyester film	13	Pressure sensor	Stainless steel diaphragm strain gauge
7	Bush holder	Aluminum			

Dimensions

Sensor separated (stainless steel diaphragm sensor)

- PPD3-S-R**D-6B
- PPD3-S-R**A-6B (discrete sensor model No.)

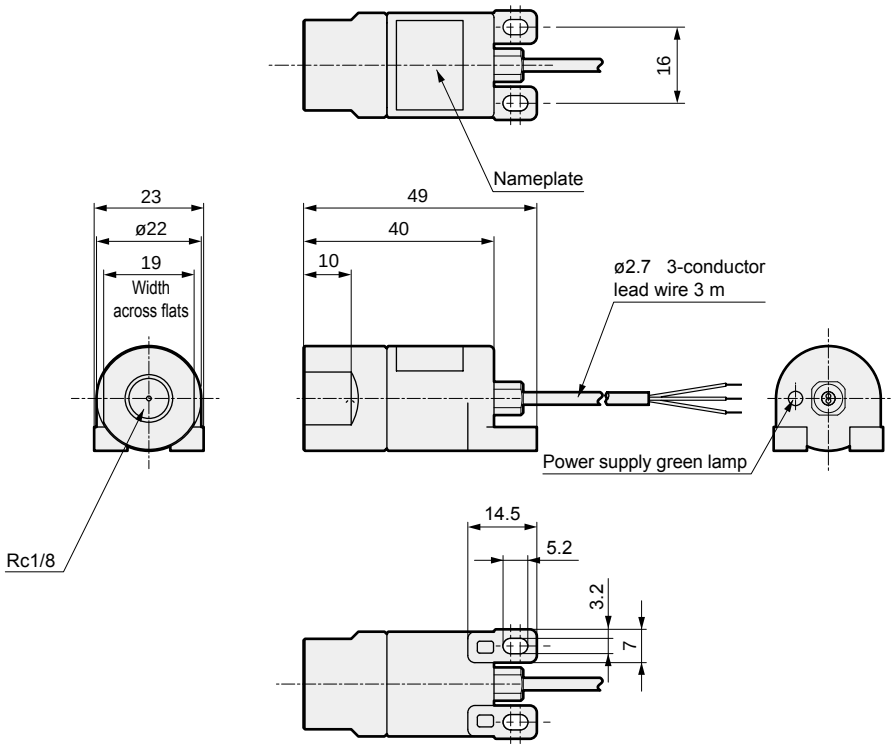

Dimensions

Sensor integrated (stainless steel diaphragm sensor)

● PPD3-S-*****-6B

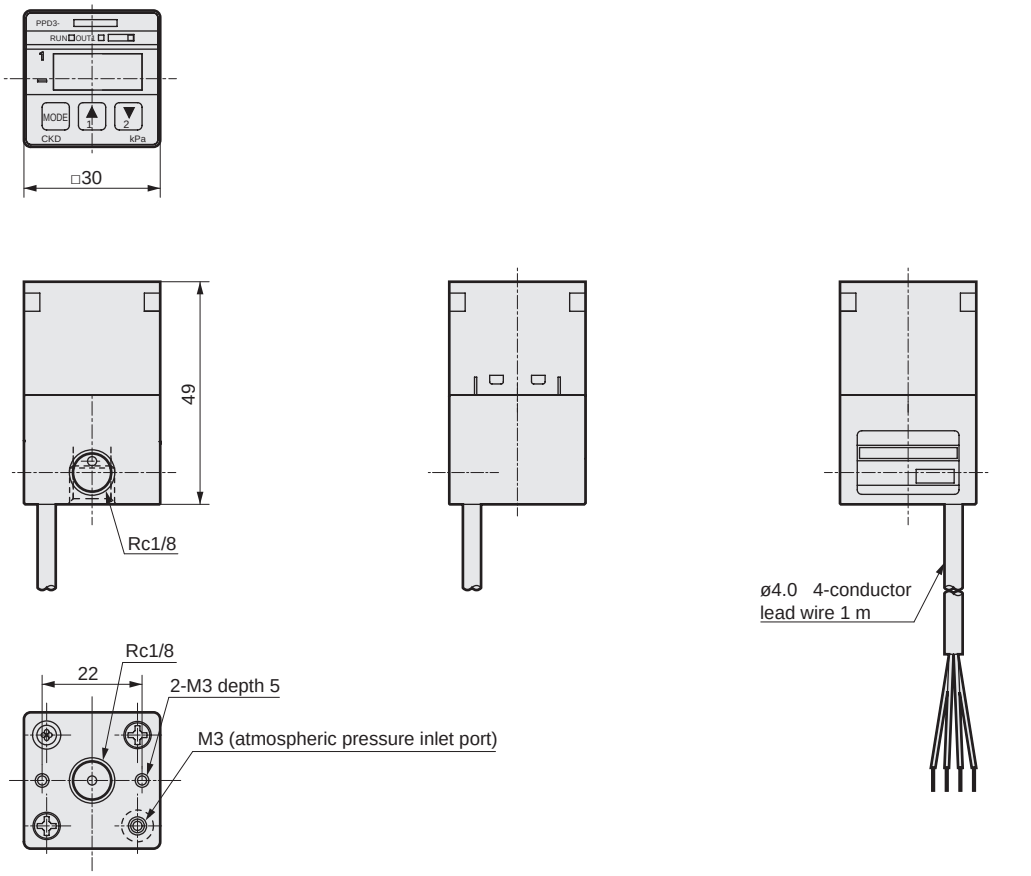

● PPD3-S-*****-6T

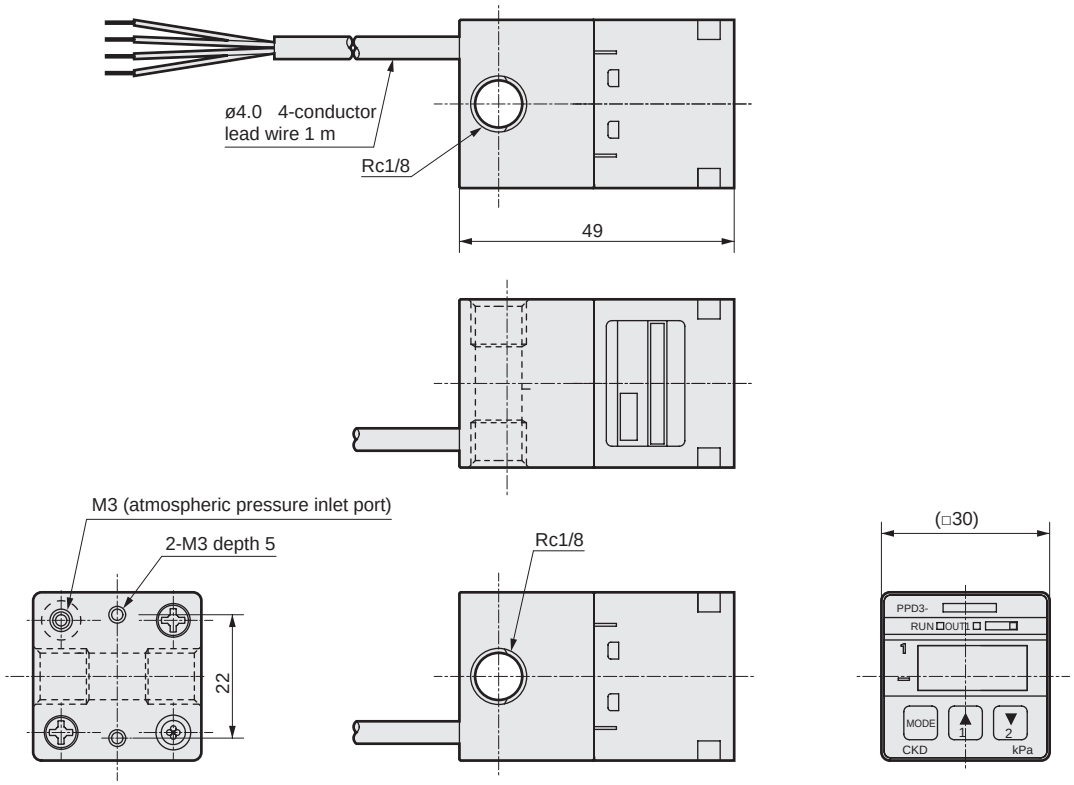

Refer to Safety precautions of PPD3 (-S) Series on pages 1227 to 1229 for wiring method and precautions.

Dimensions: PPD3-S

Sensor integrated (stainless steel diaphragm sensor)

● PPD3-S-*****-6HD

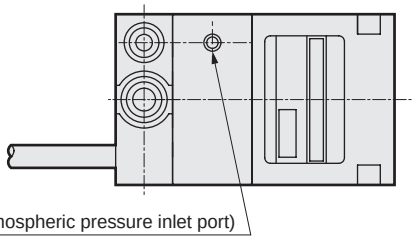

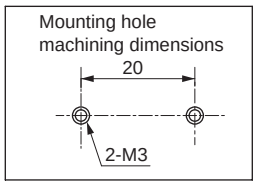

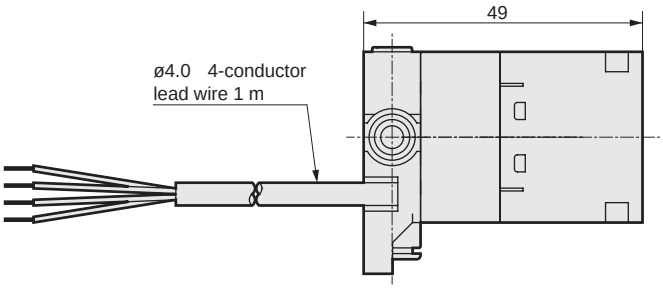

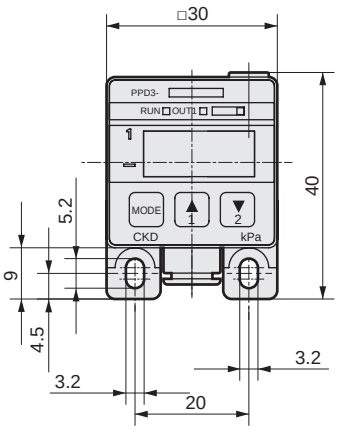

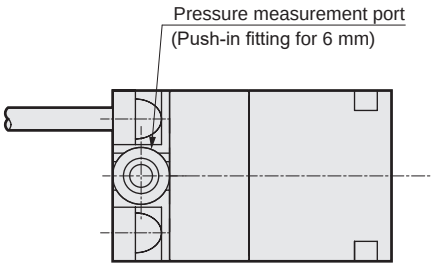

● PPD3-S-*****-6HT

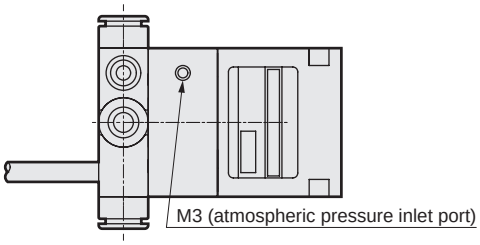

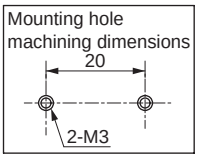

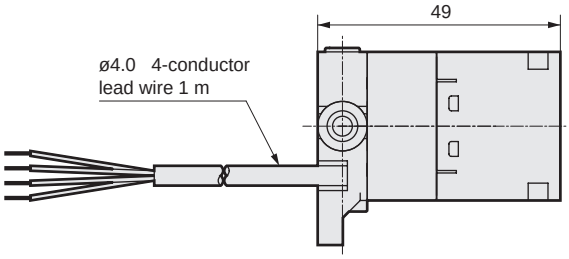

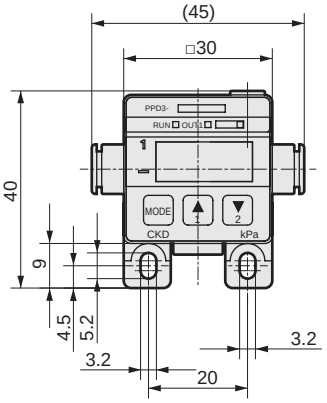

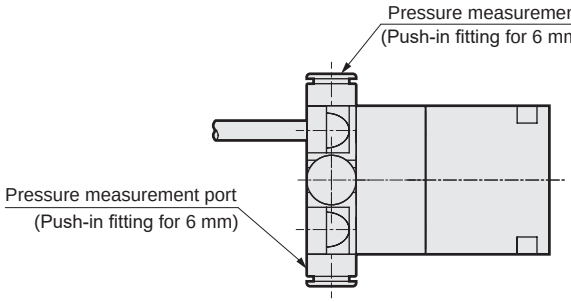

Refer to Safety precautions of PPD3 (-S) Series on pages 1227 to 1229 for wiring method and precautions.

Dimensions: Mounting bracket

● PPD3-KL (-D) assembly drawing

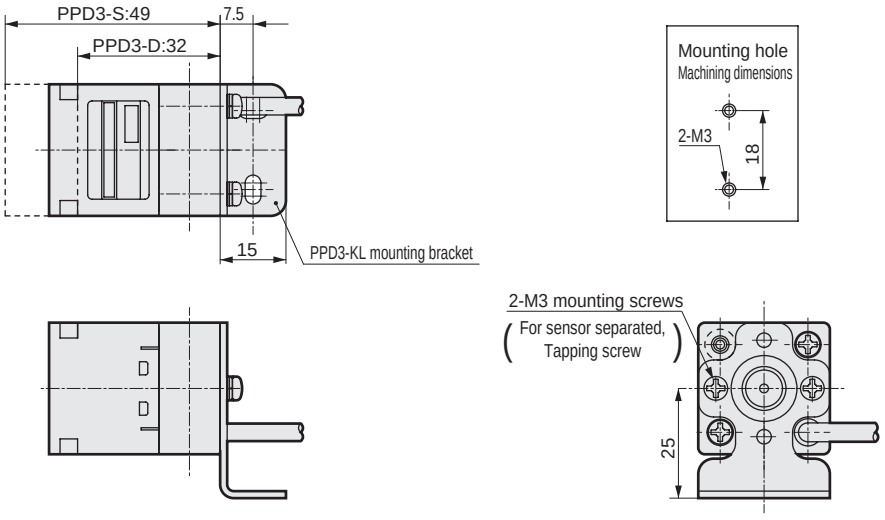

● PPD3-KD (-D) assembly drawing Note: For this installation, use CKD miniature fitting FTL4-M3 for atmospheric release port. (Sensor integrated only)

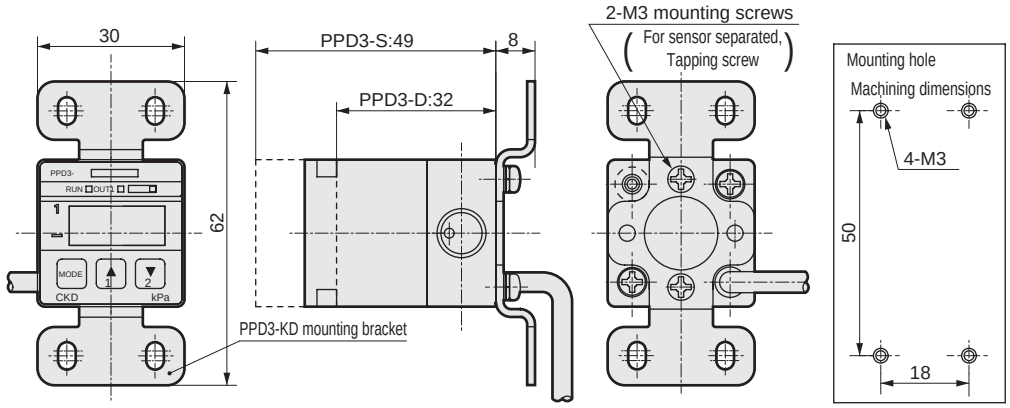

● PPD3-KHS (-D) assembly drawing Note: Push-in fitting is not included with PPD3-KHS-D.

Combinations with PPD3-R****-6B

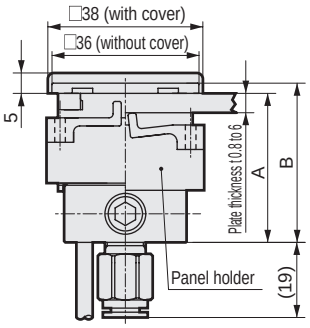

Mounting dimensions for each model

Model	A	B
PPD3-S	46.5	49
PPD3-D	29.5	32

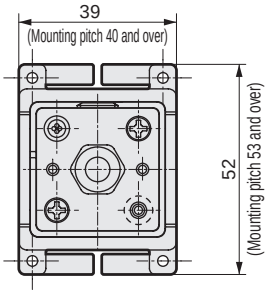

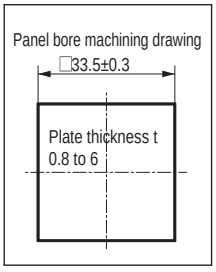

Refer to Safety precautions of PPD3 (-S) Series on pages 1227 to 1229 for wiring method and precautions.

Internal circuit / connection method

[Circuit and connection method]

PPD3-S Series (sensor integrated)

● PPD3-S-R**N

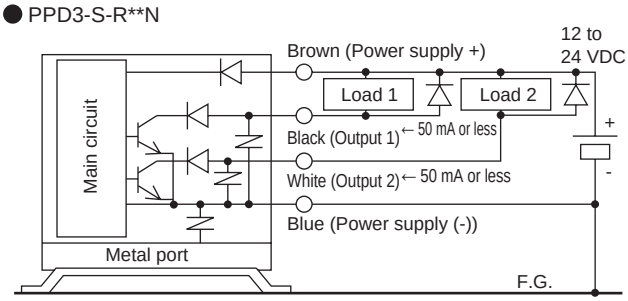

● PPD3-S-R**P

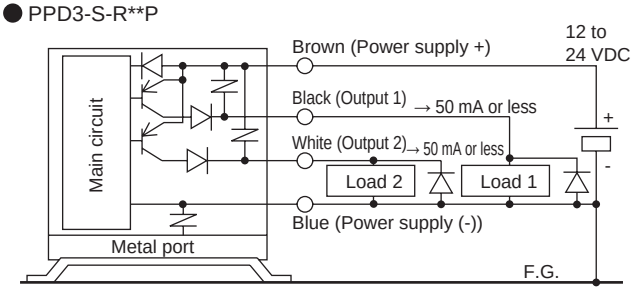

● PPD3-S-R**NA

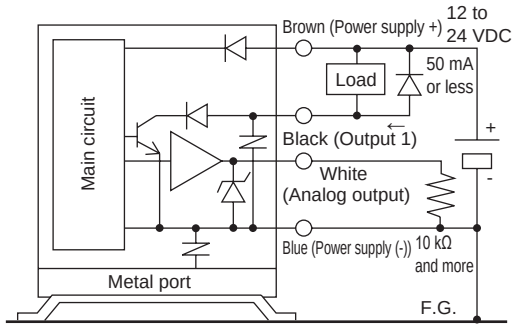

● PPD3-S-R**PA

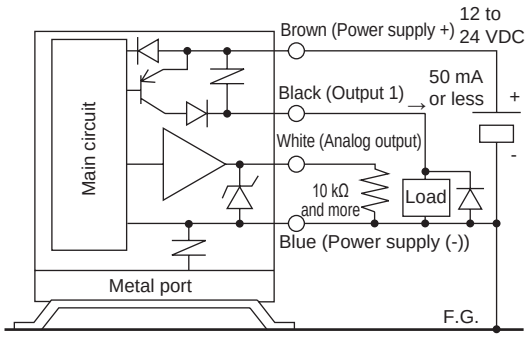

[Circuit and connection method]

PPD3 (-S)-D Series (sensor separated)

● PPD3-S-R*NAD

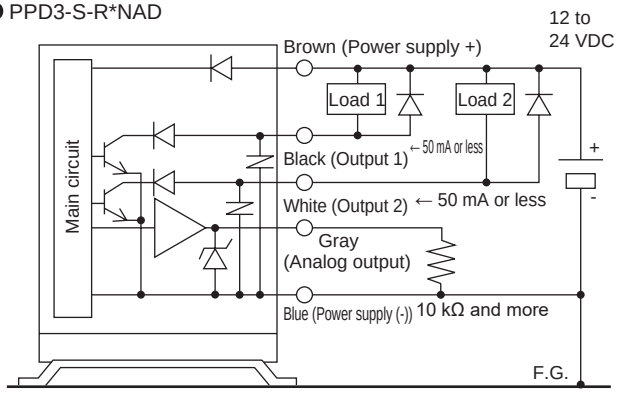

● PPD3(-S)-R*PAD

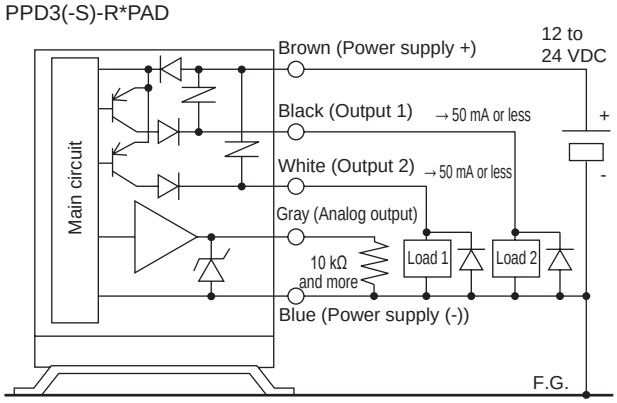

Sensor section connection method

● PPD3(-S)-R*D

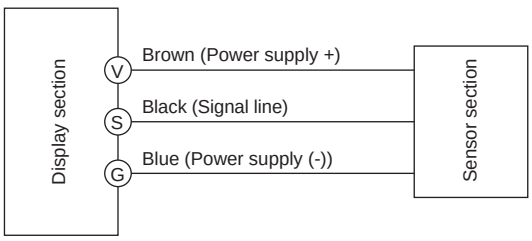

● PPD3(-S)-R*A connection method when single sensor is used

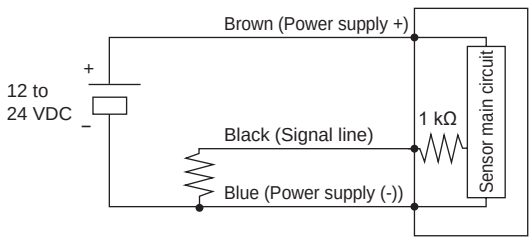

Display and function

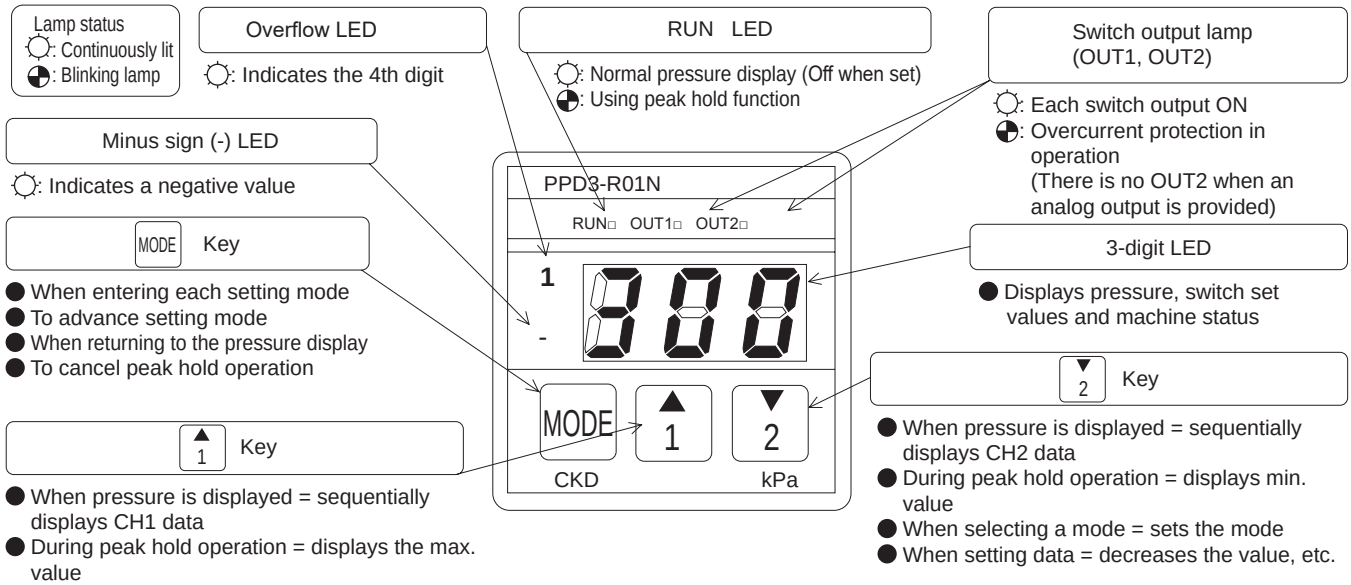

LED display

Numbers and letters are displayed with a combination of LED displays.

Numerals	0	1	2	3	4	5	6	7	8	9
Display	0	1	2	3	4	5	6	7	8	9

Characters	A	B (b)	C	D (d)	H	I (i)	J	L	N (n)	O (o)	P
Display	A	b	C	d	H	i	J	L	n	o	P

Rated pressure	980 kPa	300 kPa	100 kPa
Model No.	R10	R03	R01
Pressure code	JO J0	LO L0	HO H0

Model No. display: J0n

Output	NPN output	PNP output
Model No.	N,NA	P,PA
Output code	N n	P p

Confirmation of set value

CH1 data display

Hold down



CH2 data display

Hold down

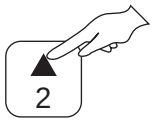

By pressing each key during pressure display, the switch data ON setting/OFF setting/operation waveform, zero point adjustment value, pressure range, and output can be confirmed.
Switch operation is not affected during the next operation.

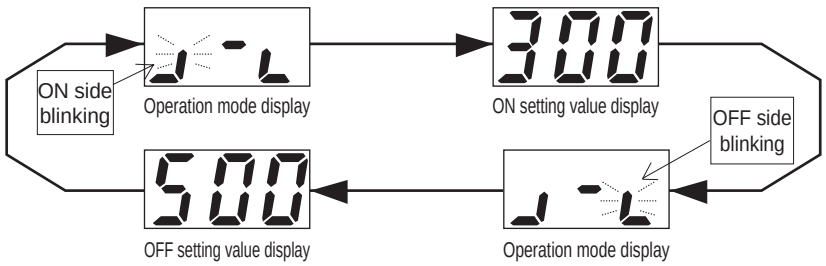

Zero point adjustment value/model No. display

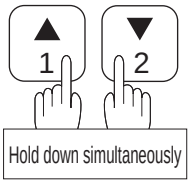

The zero point adjustment value and model No. are displayed alternately.
The switch operation is not affected during this operation.

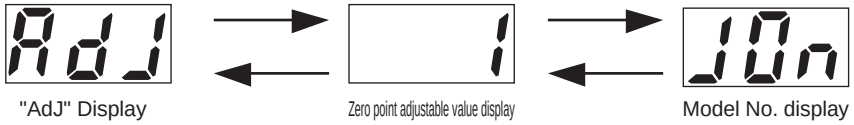

Operation method of each function

Peak hold function

The max. and min. pressure values over a given period can be displayed.
Use this to check the stability of source pressure, working pressure, etc. The peak hold operation does not affect this product's basic functions such as switch operations or pressure display.

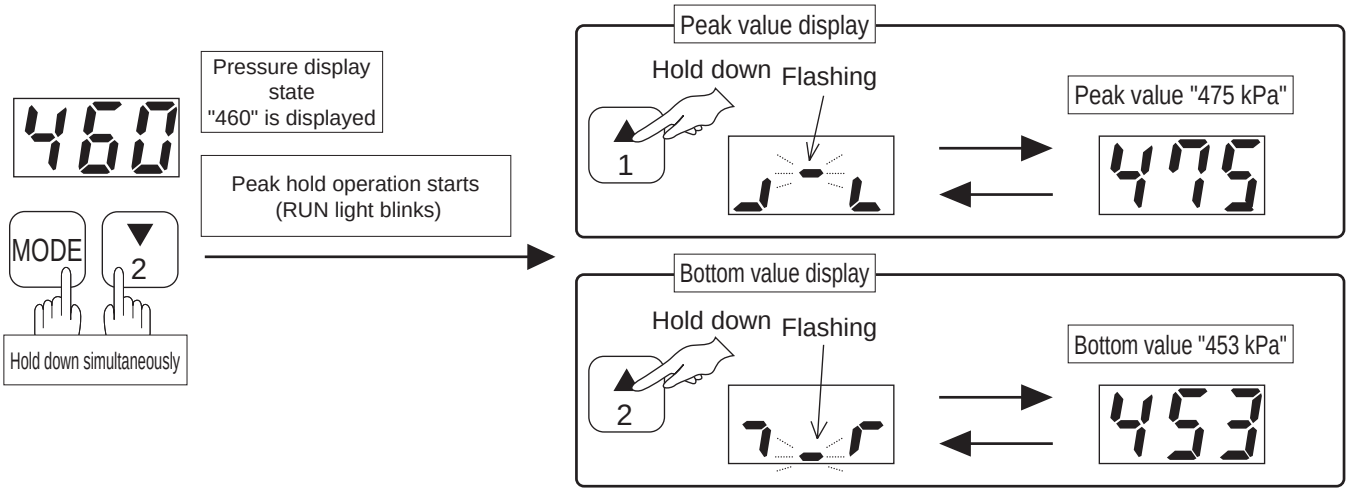

Switch output function

Refer to following page for operation method.

The PPD3 (-S) has a 2-point or 1-point switch output, and operates in 4 operation modes and stopping operation. The switch is started by setting the required operation mode (refer to the switch operation mode on page 1191) and by making two settings, ON and OFF, that regulate the operation pressure.
Determine the required operation mode and ON and OFF setting values before making settings.
Select and set the following data to operate the switch.

CH1: Operation mode	CH1: ON set value	CH1: OFF set value
CH2: Operation mode	CH2: ON set value	CH2: OFF set value

(CH2 is not used with analog output. Nothing can be output even if set.)

Switch output test function

Refer to following page for operation method.

Use this function to forcibly turn the switch output ON and confirm the wiring connection or initial operation of the input device.

*1: Use this test function to check the wiring connection and input device operation. Avoid using this function instead of actual signals when executing the sequence program while the machinery and equipment are operating.
(Refer to Precautions: Caution "During use/maintenance" on page 1229.)

Zero point adjustment function

Refer to following page for operation method.

Deviation of the display from the zero point is compensated in the atmospheric pressure pressurized state.

*2: The above settings and test significantly affect the output signal and display. Before this operation, be sure to stop the machinery and equipment using this product and confirm that safety can be ensured in case of incorrect operation or display. Using this function while the machinery and equipment are operating is dangerous and may cause incorrect operation or display. *3: To avoid incorrect operation, all keys must be held down for a set time to select the mode.

Operation chart for switch output function/forced output function/zero point adjustment function

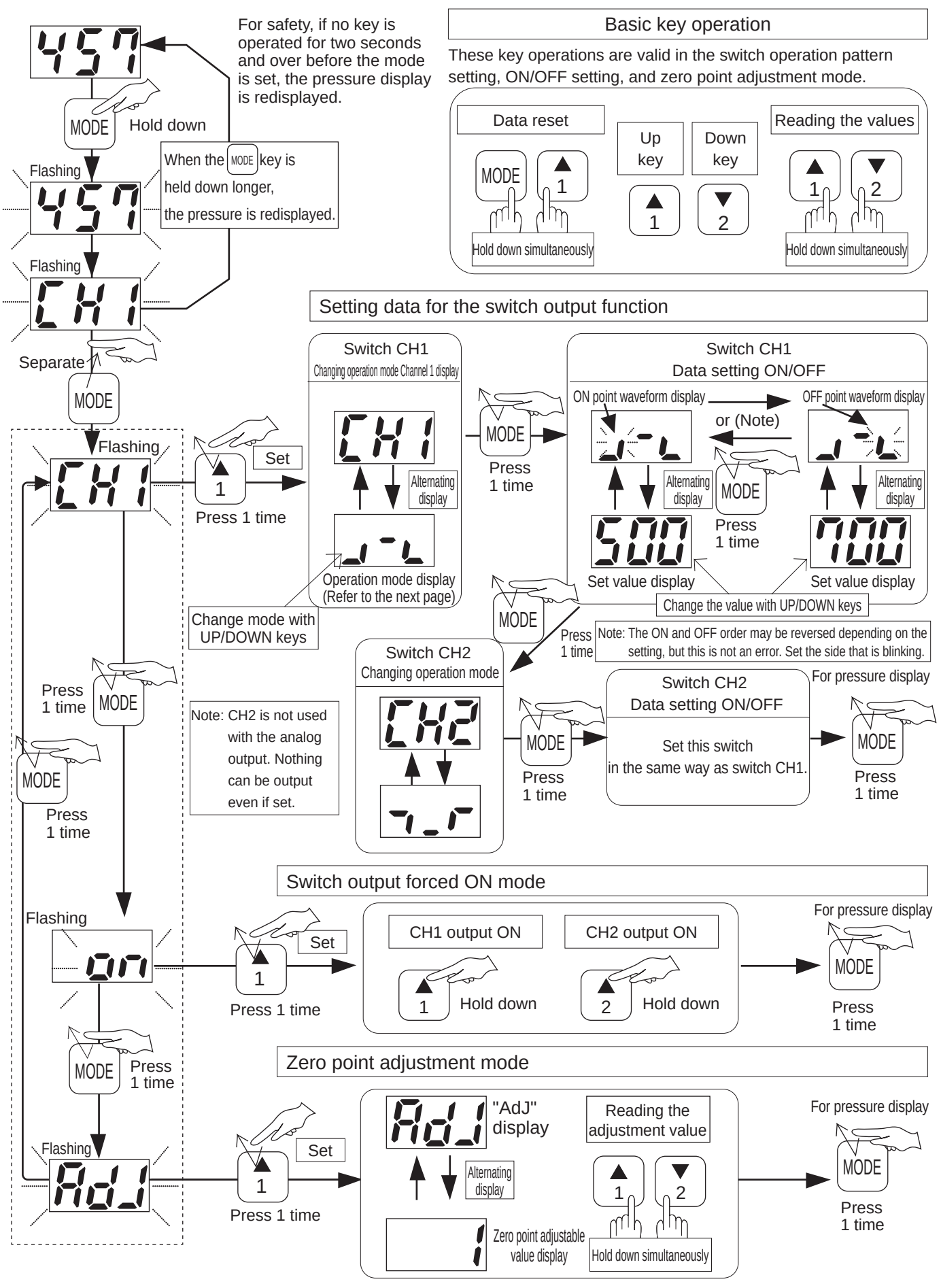

Switch operation mode

Operation mode name	Operation waveform	LED operation waveform display	Applications
1 Window operation 1 (ON when inside range)	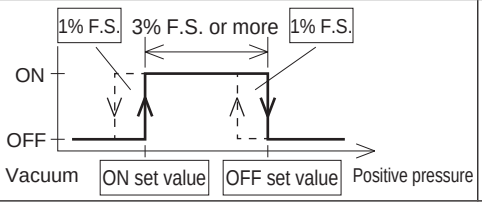		When used to confirm source pressure, the ON signal is output as the normal signal if main pressure is within the appropriate range.
2 Window operation 2 (ON when outside range)	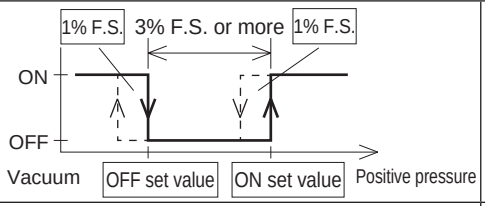	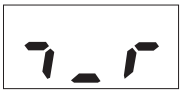	When used to confirm source pressure, the ON signal will be output as the error signal if main pressure is abnormal.
3 Hysteresis operation 1 (ON at low pressure)	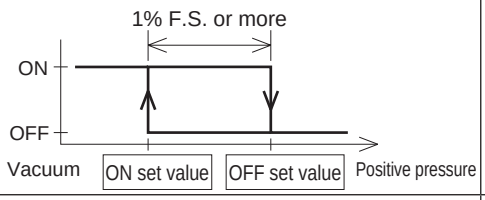		When used to confirm suction, the ON signal will be output if suction pressure for picking up the workpiece has sufficiently dropped.
4 Hysteresis operation 2 (ON at high pressure)	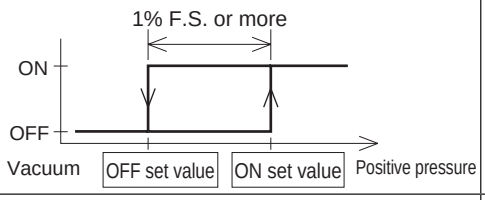		When used to confirm contact, the ON signal is output if the workpiece is held and pressure has sufficiently increased.
5 Stop operation	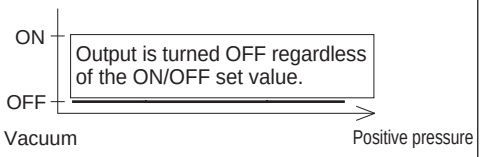	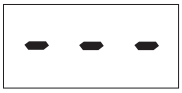	When not using the switch output, stop operation to prevent damage and accidents.

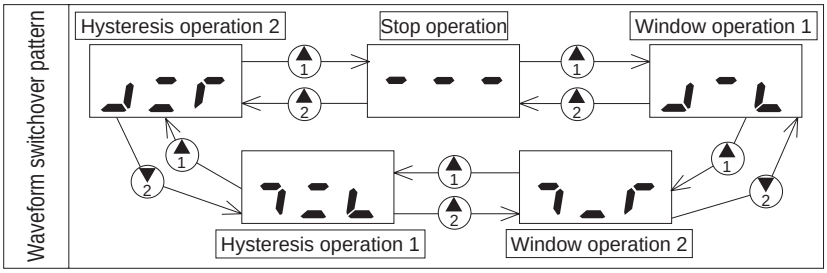

*1: In a window operation, provide an interval of 3% F.S. or more between the two setting values.
A 1% F.S. hysteresis is automatically added to the ON and OFF sides.

*2: For hysteresis operation, provide an interval of 1% F.S. or more between the 2 set values.
If the two settings are the same, operation may not take place or may be unstable.

*3: The left side of the operation waveform indicates negative pressure, and the right side indicates positive pressure.

*4: The magnitude relation of the ON set value and OFF set value is determined when the operation mode is determined, and cannot be reversed. With this product, however, operation of the designated operation pattern is the priority. When two setting values are input, the device automatically judges their magnitude and assigns them setting values as ON and OFF accordingly. Thus, even if ON and OFF setting values are input in reverse by mistake, they will be corrected and operation will take place in the specified mode.



Electronic pressure sensor with digital display

PPG-D Series



Features

- Pressure range: Compound pressure (-100.0 to 100.0 kPa)
  Vacuum pressure (0.0 to -101.3 kPa)
  Positive pressure (0.000 to 1.000 MPa)
- 2-color display
- Copy function
- Switch output 2 points, analog output 1 point (1 to 5 V or 4 to 20 mA)
- Hysteresis setting possible
- Pressure display accuracy: ±2%F.S.±1 digit
- Pressure unit can be switched *1: kPa, MPa, kgf/cm^2, bar, psi, inHg
- Degree of protection: IP65

● 2-color display (Green/red)

The display color can be set to green or red, allowing the pressure state to be confirmed at a glance.



	SoU	Sor	Grn	rEd
ON	Green	Red	Green	Red
OFF	Red	Green	Green	Red

● International compliance *1

The pressure unit can be changed.

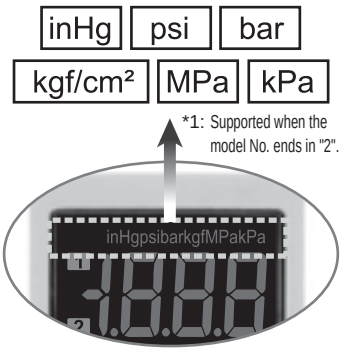

● Copy function

Ideal for reducing work processes and preventing misoperation.

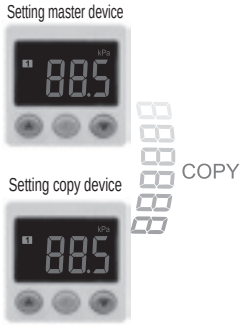

● Dust-proof/waterproof performance

Degree of protection: IP65



● Easy installation

Wiring The cables are connectors, making pressure switch mounting possible after electric wiring.





Piping Select from male and female threads.



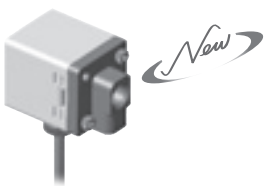

*2: Environment inspection is only available for "RoHS certificate" and "REACH certificate". Parts level detailed data is not supported.

Specifications

1 MPa ≈ 145.0 psi, 1 MPa = 10 bar

Item			PPG-D-P-☐-☐ (Positive pressure)	PPG-D-V-☐-☐ (Vacuum pressure)	PPG-D-R-☐-☐ (Compound pressure)
Rated pressure			0.000 (≈0 psi, 0 bar) to 1.000 MPa (≈145 psi, 10 bar)	0.0 (≈0 psi, 0 bar) to -101.3 kPa (≈-15 psi, -1 bar)	-100.0 (≈-14 psi, -1 bar) to 100.0 kPa (≈14 psi, 1 bar)
Set pressure			-0.100 (≈-14 psi, -1 bar) to 1.000 MPa (≈145 psi, 10 bar)	10.0 (≈2 psi, 1 bar) to -101.3 kPa (≈-15 psi, -1 bar)	-101.0 (≈-14 psi, -1 bar) to 101.0 kPa (≈14 psi, 1 bar)
Proof pressure			1.5 MPa (≈217 psi, 15 bar)	300 kPa (≈43 psi, 3 bar)	
Applicable fluids			Clean air, non-corrosive/non-combustible gas		
Display unit		kPa	–	0.1	
		MPa	0.001	–	
		kgf/cm²	0.01	0.001	
		bar	0.01	0.001	
		psi	0.1	0.01	
		inHg	–	0.1	
Power supply voltage			12 to 24 VDC ±10%, ripple (P-P) 10% or less or Class 2		
Current consumption			40 mA or less (no load)		
Switch output	Output		NPN or PNP transistor, open collector 2 points		
	Max. load current		125 mA		
	Max. power supply voltage		NPN output: 30 VDC, PNP output: 24 VDC		
	Internal voltage drop		1.5 V or less		
	Response time		2.5 ms or less (Chattering prevention function: 25 ms, 100 ms, 250 ms, 500 ms, 1000 ms, and 1500 ms are selectable)		
	Switch output load short-circuit protection		Yes		
Analog output *2, *3	Voltage output	Voltage	1 to 5 V (±2.5%)		
		Impedance	Approx. 1 kΩ		
	Current output	Current	4 to 20 mA (±2.5%)		
		Impedance	Max. load impedance: 250 Ω (12 VDC) 600 Ω (24 VDC) Min. load impedance: 50 Ω		
	Linearity		±1% F.S.		
Display	LCD display		3½-digit, 7 segment (Red/Green)		
	Switch ON indicator lamp		Orange (1, 2 indicator lamps) OUT1 OUT2		
	Update time		Approx. 0.2 seconds		
	Display accuracy		±2% F.S. ±1 digit (Reference temperature: 25 ±3°C)		
Repeatability (switch output)			±0.2% F.S. ±1 digit		
Environment conditions	Degree of protection		IP65		
	Operating ambient temperature		0 (32°F) to 50°C (122°F)		
	Storage ambient temperature		-10 (14°F) to 60 °C (140°F) (no condensation or freezing)		
	Ambient humidity		35 to 85% RH (no condensation)		
	Withstand voltage		1000 VAC, 1 minute (between the case and lead wire)		
	Insulation resistance		50 MΩ (500 VDC, between the case and lead wire)		
	Vibration resistance		Compound amplitude 1.5 mm, 10 G, 10 Hz - 55 Hz - 10 Hz per minute, 2 hours each in X, Y, Z directions		
	Shock resistance		100 m/s² (10 G), 3 times each in X, Y, Z directions		
Temperature characteristics			±2% F.S. (25°C (77°F) Reference) temperature range 0 (32°F) to 50 °C (122°F)		
Port size			6BM: R1/8", M5 6NM: NPT1/8", #10-32UNF 6GM: G1/8", M5 6B: Rc1/8 (female thread), 6N: NPT 1/8 (female thread), 6G: G1/8 (female thread)		
Lead wire			Oil resistant cable ø4, 5-conductor (0.15mm2, insulator outer diameter ø0.95 mm) 2 m		
Weight			Male thread: approx. 86 g (including lead wire 2 m)/Female thread: approx. 115 g (including lead wire 2 m)		

*1: The hysteresis value of one-point set mode and window comparator mode can be adjusted to between 1 and 8 digits.
*2: Analog current output cannot be selected together with analog voltage output.
*3: Analog voltage output cannot be selected together with analog current output.

How to order

PPG - D - R NA - 6BM

- R: Ⓐ Pressure range
- NA: Ⓑ Output
- 6BM: Ⓒ Piping shape
- (blank): Ⓓ Unit change

Code	Item
Ⓐ Pressure range	
R	Compound pressure (-100 to 100 kPa)
V	Vacuum pressure (0 to -101.3 kPa)
P	Positive pressure (0.000 to 1.000 MPa)
Ⓑ Output	
NV	NPN transistor open collector 2 points + analog (voltage) output (1 to 5 V)
NA	NPN transistor open collector 2 points + analog (current) output (4 to 20 mA)
NC	NPN transistor open collector 2 points + copy function
PV	PNP transistor open collector 2 points + analog (voltage) output (1 to 5 V)
PA	PNP transistor open collector 2 points + analog (current) output (4 to 20 mA)
PC	PNP transistor, open collector 2 points + copy function
Ⓒ Piping shape	
6BM	R1/8" (male thread), M5
6NM	NPT1/8", #10-32UNF
6GM	G1/8" (male thread), M5
6B	Rc1/8 (female thread)
6N	NPT 1/8 (female thread)
6G	G1/8 (female thread)
Ⓓ Unit change	
Blank	SI unit fixed (kPa/MPa) Instruction manual: Japanese, English
2	With unit switching function Instruction manual: Traditional Chinese, English*1

*1: In compliance with the new Measurement Act, it cannot be used in Japan.

●Discrete option model No.

PPG - D - KD

Code	Applicable Ⓒ Piping shape	Item
KD	6BM/6NM/6GM	Parallel mounting bracket (for male thread) (mounting screws included)
KL		L-shaped mounting bracket (for male thread) (mounting screws included)
KDA	6B/6N/6G	Parallel mounting bracket (for female thread) (mounting screws included)
KLA		L-shaped mounting bracket (for female thread) (mounting screws included)
KHS	6BM/6NM/6GM 6B/6N/6G	Panel adapter
KHSCB		Panel adapter + Front protective cover

Dimensions (piping shape male thread)

●Body PPG-D-□-6BM/6NM/6GM

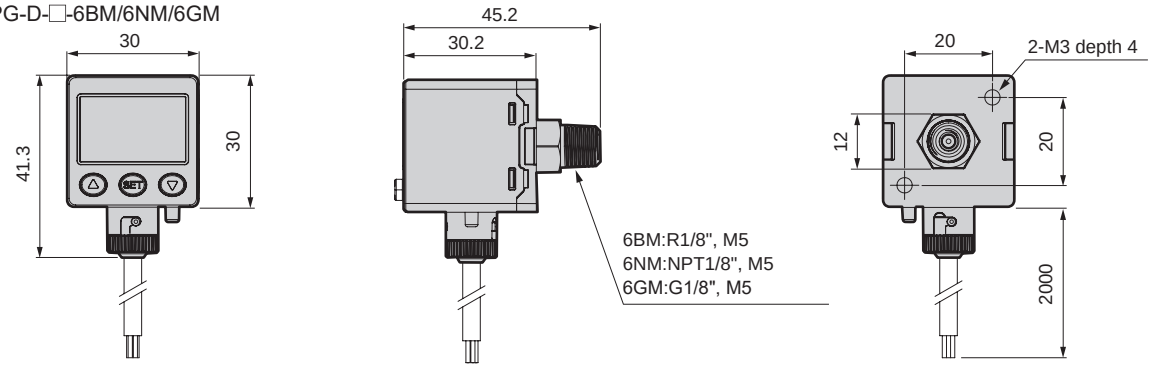

●Parallel mounting bracket (mounting screws included)

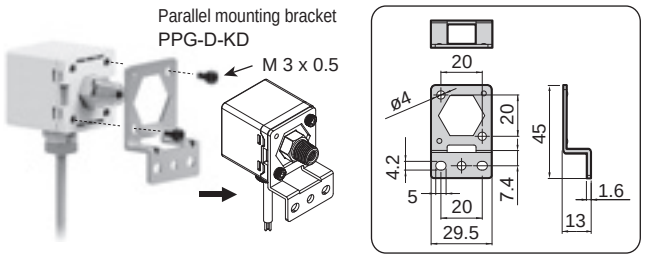

●L-shaped mounting bracket (mounting screws included)

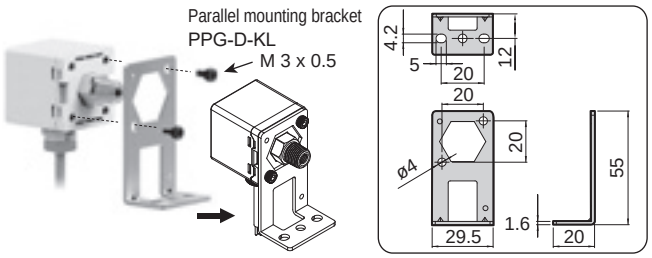

Dimensions (piping shape female thread)

●Body PPG-D-□-6B/6N/6G

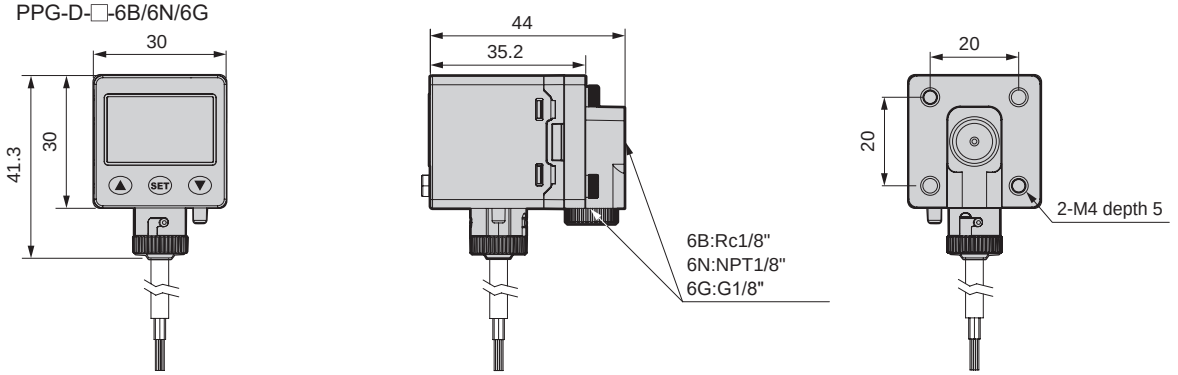

●Parallel mounting bracket (mounting screws included)

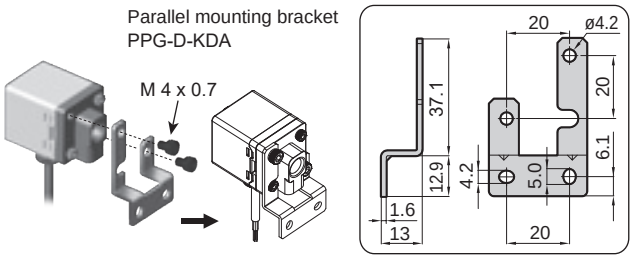

●L-shaped mounting bracket (mounting screws included)

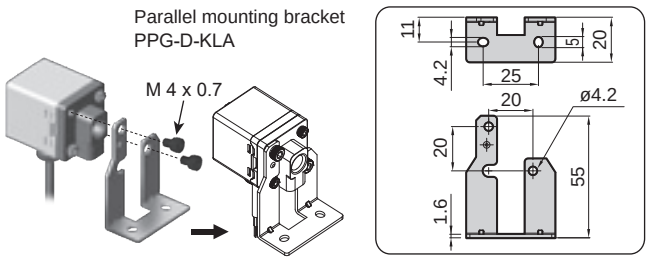

Common option Dimensions

●Panel adapter + Front protective cover
PPG-D-KHS, PPG-D-KHSCB

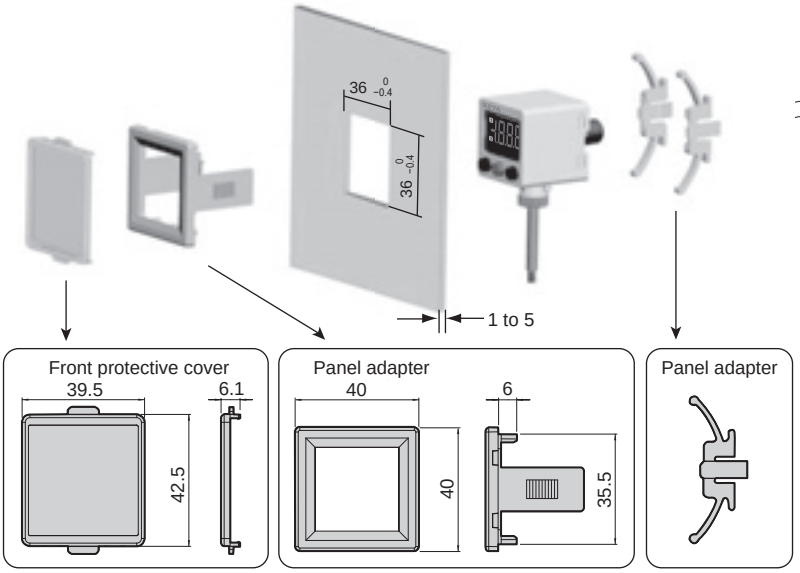

●Protector (IP65)

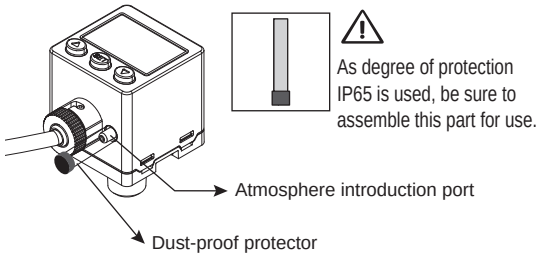

Display description

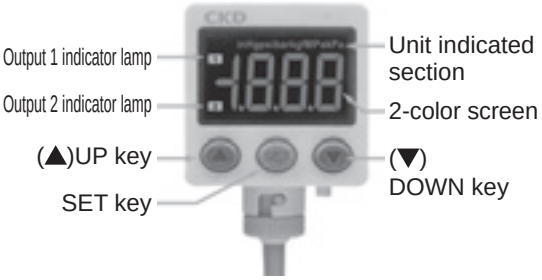

Internal circuit / connection method

●PPG-D-□NV
2NPN + Analog output (1 to 5 V)

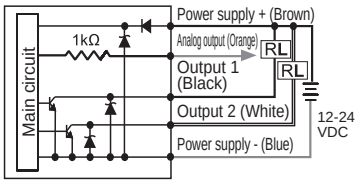

●PPG-D-□NA
2NPN + Analog output (4 to 20 mA)

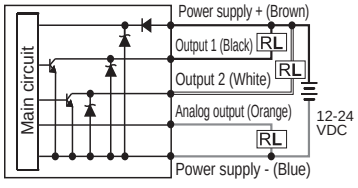

●PPG-D-□NC
2NPN + Copy function

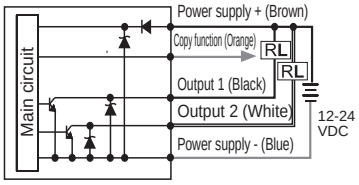

●PPG-D-□PV
2PNP + Analog output (1 to 5 V)

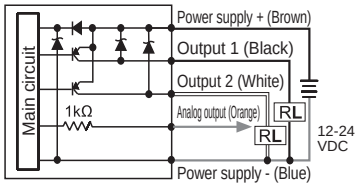

●PPG-D-□PA
2PNP + Analog output (4 to 20 mA)

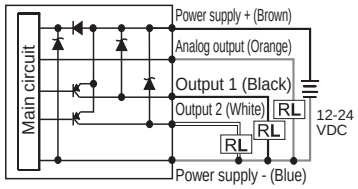

●PPG-D-□PC
2PNP + copy function

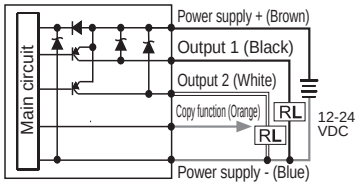

Names of display/operation sections

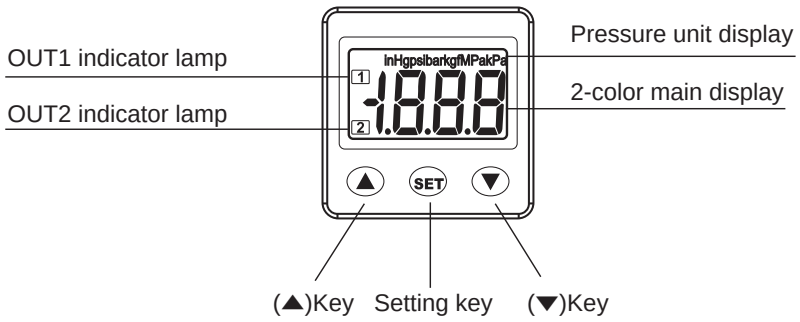

Initial setting mode

[Measurement mode]

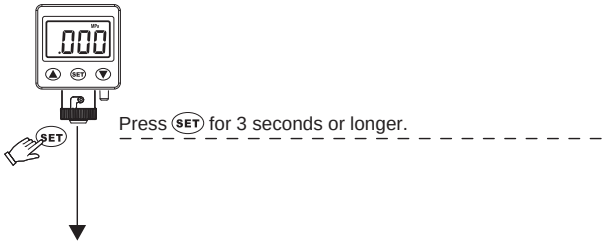

[OUT1 operation mode setting]

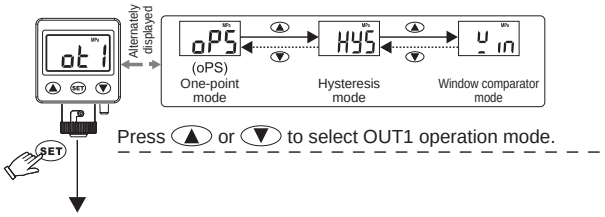

[OUT1 output style setting]

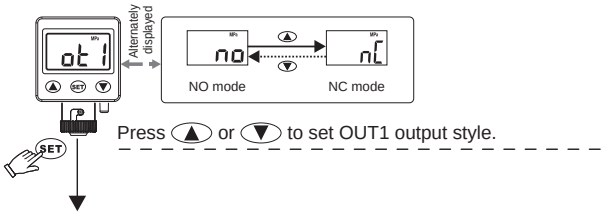

[OUT2 operation mode setting]

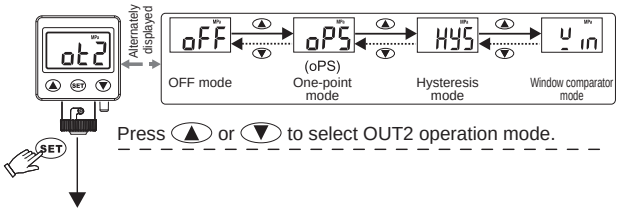

[OUT2 output style setting]

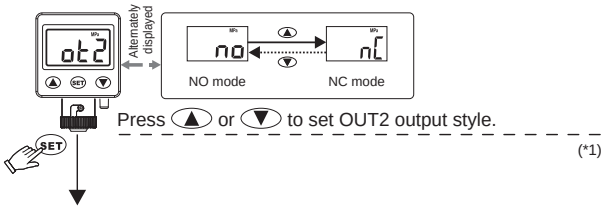

[Setting response time]

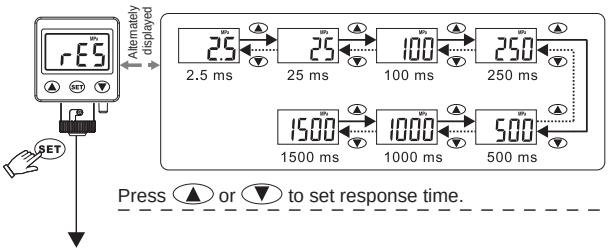

[Display color setting]

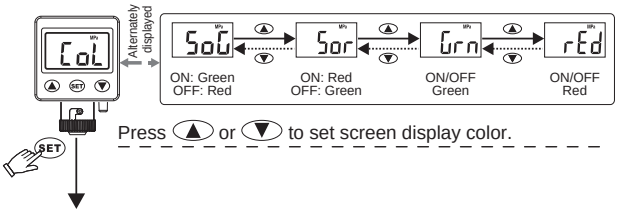

[Unit display]

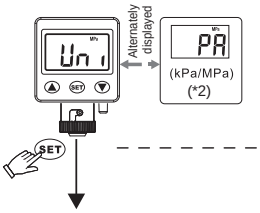

***When with unit change function**

[Unit change]

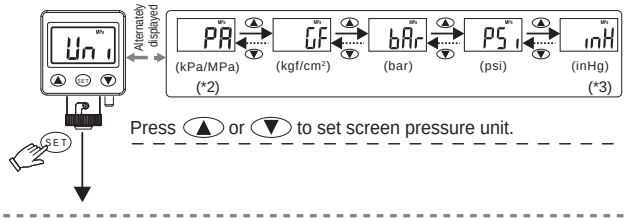

[Measurement mode]



*1. This setting mode is not displayed when OUT2 is set to OFF.
*2. The pressure unit is MPa for positive pressure and kPa for vacuum pressure and compound pressure.
*3. Applicable only for vacuum pressure and compound pressure.

Applied setting modes

[Measurement mode]



Press (SET) for 5 seconds or longer.

[Copy function setting]

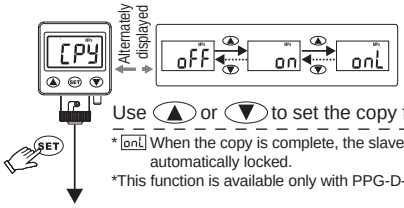

Use ▲ or ▼ to set the copy function.

* onL When the copy is complete, the slave sensor will be automatically locked. (*2)

*This function is available only with PPG-D-□NC□ and PPG-D-□PC-□.

[Hysteresis value setting]

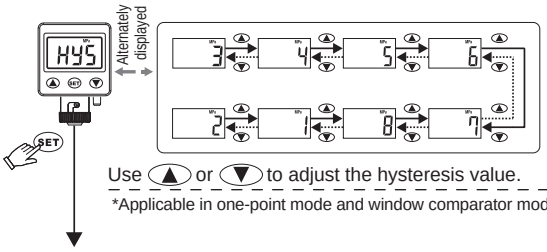

Use ▲ or ▼ to adjust the hysteresis value.

*Applicable in one-point mode and window comparator mode.

[Initialize setting]

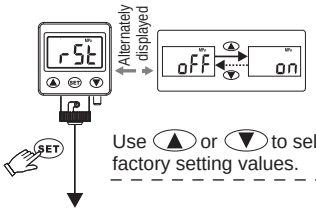

Use ▲ or ▼ to select whether to return to factory setting values.

[LCD display color setting]

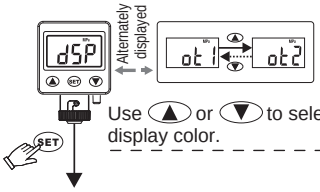

Use ▲ or ▼ to select OUT1 or OUT2 LCD display color.

[Fine adjustment mode]

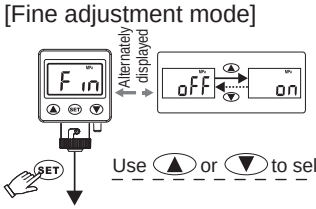

Use ▲ or ▼ to select the fine adjustment function. (*3)

[Power saving mode]

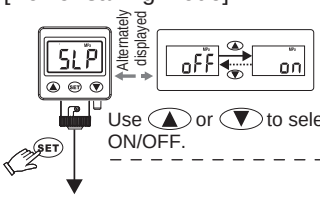

Use ▲ or ▼ to select power saving mode ON/OFF. (*1)

[Measurement mode]



*1 Power saving mode will start when the setting is on.
Refer to "Power saving mode" for details.

*2 Display copy function will start when the setting is on or onL.
Refer to "Copy function setting" for details.

*3 Fine adjustment mode will start when the setting is on.
Refer to "Fine adjustment" for details.

Power saving mode

- With power saving mode set, the display will go out if there is no key operation for 30 seconds.
- Fine differentials may be generated in the pressure display during power saving mode. This is normal, and does not affect output operation.
- Press any key during power saving mode to return the main screen temporarily to measurement mode.

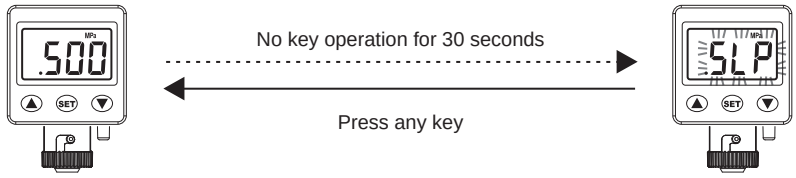

Measurement mode

Power saving mode
(power saving mode "SLP" blinks on main screen)

Pressure setting mode

One-point mode

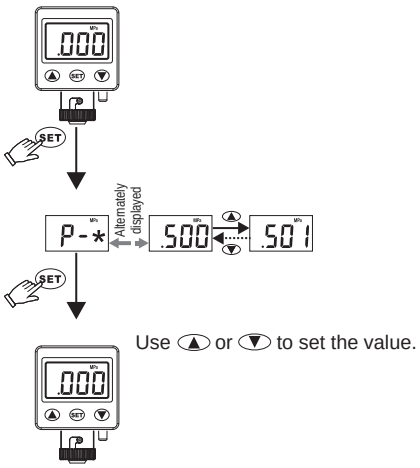

*When setting OUT1, * displays 1.
When setting OUT2, * displays 2.

Hysteresis mode/window comparator mode

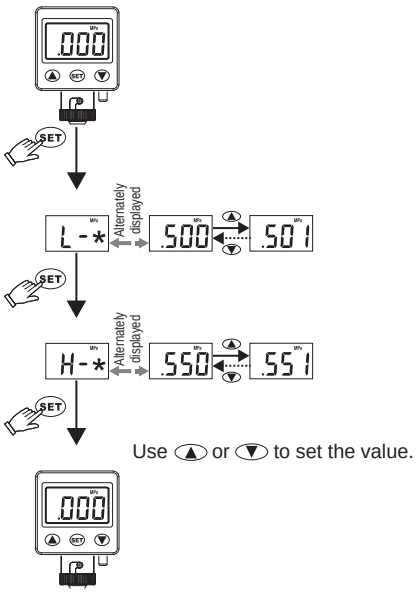

Output model No.

One-point mode

Normally open mode

Positive pressure/compound pressure (PPG-D-P, PPG-D-R)

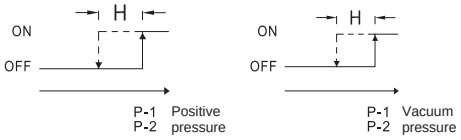

Vacuum pressure (PPG-D-V)

Normally closed mode

Positive pressure/compound pressure (PPG-D-P, PPG-D-R)

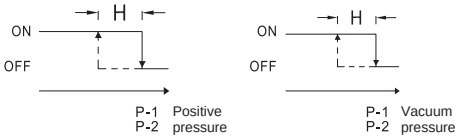

Vacuum pressure (PPG-D-V)

Hysteresis mode

Normally open mode

Positive pressure/compound pressure (PPG-D-P, PPG-D-R)

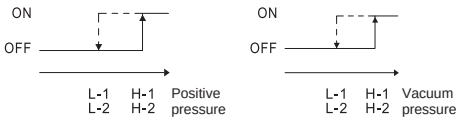

Vacuum pressure (PPG-D-V)

Normally closed mode

Positive pressure/compound pressure (PPG-D-P, PPG-D-R)

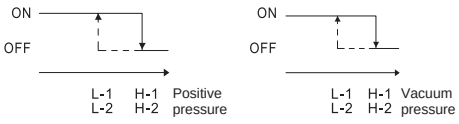

Vacuum pressure (PPG-D-V)

Window comparator mode

Normally open mode

Positive pressure/compound pressure (PPG-D-P, PPG-D-R)

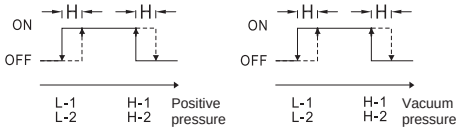

Vacuum pressure (PPG-D-V)

Normally closed mode

Positive pressure/compound pressure (PPG-D-P, PPG-D-R)

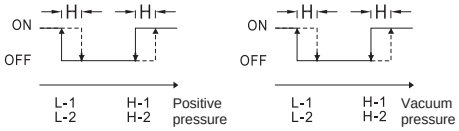

Vacuum pressure (PPG-D-V)

*1: When the hysteresis is set to 2 digits or less, if the input pressure is very close to the set pressure, malfunction may occur in the switch output.
*2: In window comparator mode, if the difference between the two set points is smaller than the fixed hysteresis set value, the switch output may malfunction.

Analog output

The applicable pressure range for analog output ranges of 1 to 5 V or 4 to 20 mA is shown in the graph below.

(Compound pressure)

Analog output (v)

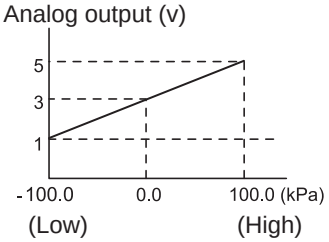

(Vacuum pressure)

Analog output (v)

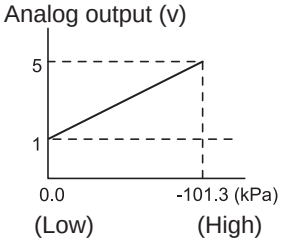

(Positive pressure)

Analog output (v)

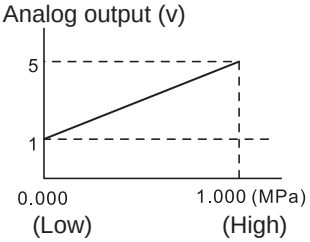

(Compound pressure)

Analog output (mA)

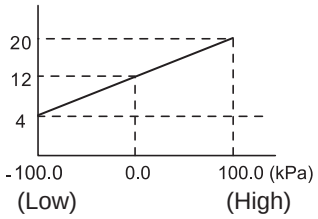

(Vacuum pressure)

Analog output (mA)

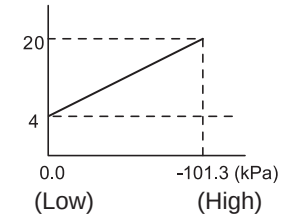

(Positive pressure)

Analog output (mA)

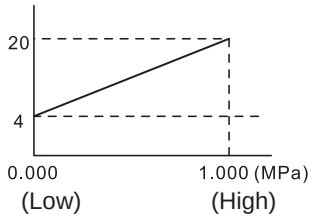

Zero value setting

In setting mode, hold down ▲ + ▼ simultaneously until "00" is displayed.
Exit the zero value setting by releasing the keys.

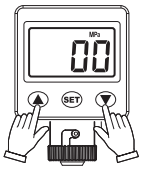

Maximum/minimum value display mode

Maximum value display mode

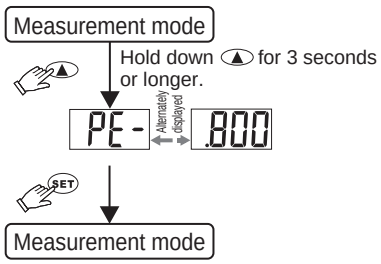

Minimum value display mode

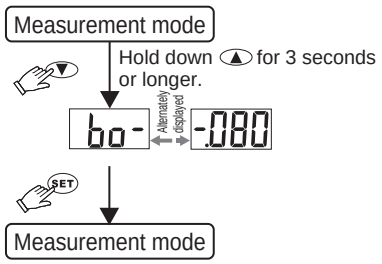

Key lock/unlock

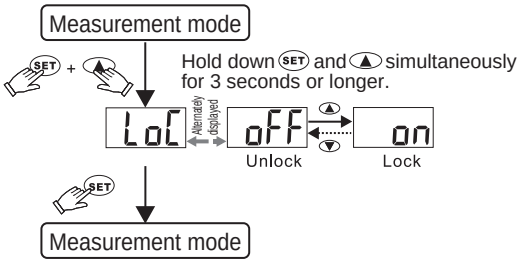

◎ Press any key while setting the lock function mode to display as in the image.
After a little while, the measurement mode will return.

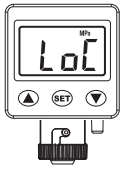

Lead wire mounting procedure

Mount the lead wires as below.

- Set the terminal protrusion facing upward. (Refer to Fig. (1))
- Insert the terminal protrusion into the pressure sensor groove. (Refer to Fig. (2))
- Mount the terminal cover on the product. (Refer to Fig. (3))
- Rotate the terminal cover to lock. (Refer to Fig. (4))

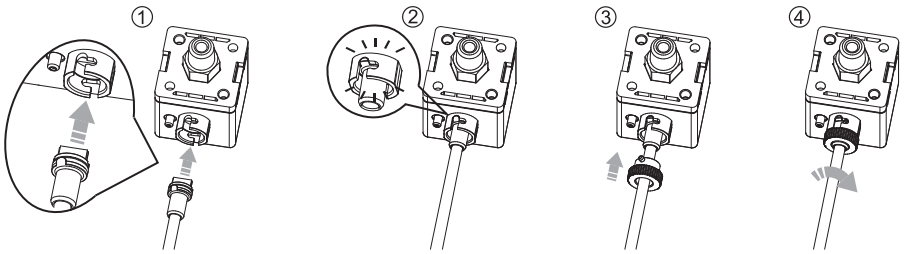

Note: Do not insert and remove 20 times or more.

Copy function setting

◎ The copy function enables copying pressure values from the master sensor to the slave sensor.
◎ Before copying, confirm the pressure sensor model number.
◎ This function cannot be used between different model numbers.
◎ This function copies from the master side sensor to one slave side sensor at a time.

[Setting procedure]

1. Set the on or onL copy function so that the master sensor is in copy status.
   Refer to the copy setting in "H. Applied setting modes."
2. Turn the master sensor and slave sensor power supply OFF.
3. Wire the master sensor to the slave sensor as shown in the figure below.

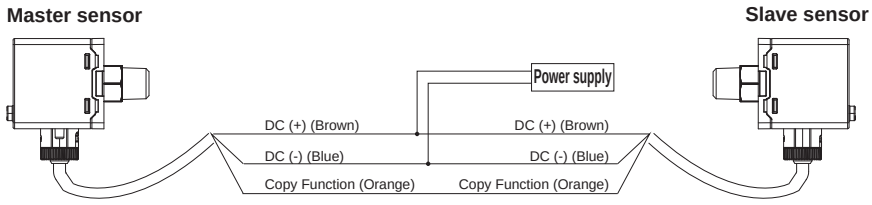

4. Turn ON the power for the master sensor and slave sensor simultaneously.
5. Wait 5 seconds for data transfer. When complete, the master sensor will display [CPY] and [Gd] alternately.
   The slave sensor will display [SLv] and [Gd] alternately.
6. When data transfer fails
   The master sensor will display [CPY] and [Gd] alternately.
   The slave sensor displays [Er8].
7. Turn the power OFF and remove the wiring.
   Failure to remove the wires could cause sensor failure.

To copy again to different slave sensors, repeat steps (3) through (5).
This function is available only with PPG-D-□NC-□ and PPG-D-□PC-□.

*1: If the power is not turned ON simultaneously, the data may not be copied.
*2: If the data transfer fails, check that the wiring is correct.
Then repeat steps (3) through (5).

Changing the master sensor display to measurement mode

◎ When the master sensor displays [CPY] and [Gd] alternately, press ▼ to display measurement mode.

Fine adjustment mode

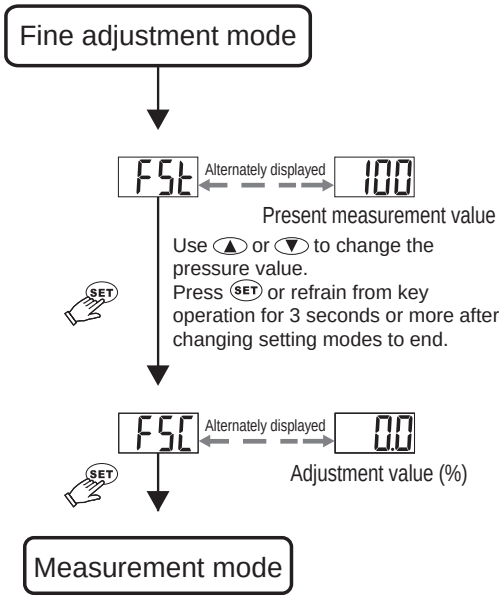

This function removes minimal differences in output value to display matched output values. The display value can be adjusted within a range of ±2.5% of actual measured values.

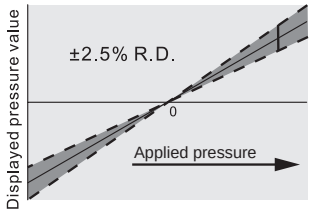

: The default setting is adjustment value 0.

: Fine adjustment range

R.D. (actual measured value)

1. Setting resolution is ±0.1% R.D.
2. Analog output will also be changed after adjustment.

Error display description

Error name		Error code	Error description	Troubleshooting
Overcurrent error	out1	Er 1	The load current of output 1 exceeds 125 mA.	Turn OFF the power and check the cause of the overcurrent. Next, lower the load current to 125 mA or less and then turn ON the power again.
	out2	Er2	The load current of output 2 exceeds 125 mA.	
Residual pressure error		Er3	Pressure value exceeds ±3% F.S. at zero reset.	Perform zero reset again after changing the input pressure.
Working pressure value error		HHH	Supply pressure exceeds the upper limit.	Adjust the pressure to within the working pressure range.
		LLL	Supply pressure exceeds the lower limit.	
System error		Er4	Internal system error	Turn OFF the power and then turn it ON again. If the error is not resolved, contact us.
		Er5	Internal system error	
		Er6	Internal data error	
		Er7	Internal data error	
Copy data error		Er8	Copy data error	Check the main body model and the lead wire connections. If the error is not resolved after turning the power ON again, contact us.

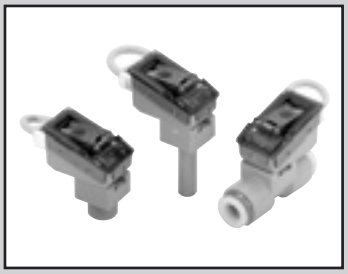

Compact electronic pressure switch (pressure switch)

PPE Series



Overview

Pressure switch PPE Series is trimmer setting semiconductor pressure switch developed for pneumatic/vacuum systems. Usage is flexible due to compact shape and three types of piping connection (R1/8, ø6 plug, ø6 push-in fitting).

Features

- Semiconductor pressure sensor
  Used semiconductor sensor pressure detection, high precision and high reliability are achieved.
- 2-wire
  In 2-wire, wiring man-hours are reduced and both PLC input formats (source and sink) can be used.
- High proof pressure
  Proof pressure of negative pressure (V01) is as high as 0.6 MPa, so the product can withstand vacuum burst by pressurization.
- Reverse connection/overcurrent protection circuit integrated
  A protection circuit for improper wire connection (reverse connection, load short circuit) is integrated.
- Wide port size
  R1/8
  ø6 plug
  ø6 Push-in fitting

Specifications

Model No. / Item	Vacuum	Positive pressure	
	PPE-V01-□ *1	PPE-P01-□ *1	PPE-P10-□ *1
Rated pressure	-101.3 (≈-15 psi) to 0 kPa (≈0 psi)	0 (≈0 psi) to 100 kPa (≈15 psi)	0 (≈0 psi) to 1 MPa (≈150 psi)
Plate color *2	Red	Green	Blue
Pressure sensitive element	Diffusion semiconductor pressure sensor		
Applicable fluid	Air/non-corrosive gas		
Proof pressure	0.6 MPa (≈87 psi, 6 bar)	0.3 MPa (≈44 psi, 3 bar)	1.5 MPa (≈220 psi, 15 bar)
Repeatability	±1% F.S.		
Hysteresis	3% F.S. or less		
Temperature characteristics	±3% F.S.		
Load voltage	10 to 30 VDC		
Load current	5 to 50 mA		
Internal voltage drop	4 V or less		
Leakage current	1 mA or less		
Indicator lamp	Yellow LED lit when ON		
Lead wire length	Standard 3 m (oil resistant vinyl cabtyre cable 2-conductor 0.15 mm^2 insulator outer diameter ø1.0)		
Operating ambient temperature range	0 (32°F) to 50°C (122°F) (no freezing)		
Vibration resistance	10 to 55 Hz compound amplitude 1.5 mm 4 hours per X, Y, Z direction		
Degree of protection	IEC standards IP65 or equivalent		
Piping method	R1/8, ø6 plug, ø6 push-in fitting		
Weight	PPE-□-6/-H6-B: Approx. 37 g, PPE-□-H6: Approx. 42 g		

*1: □ section is matched to piping section. (Refer to How to order)
*2: Name plate color is changed by pressure range. (To prevent improper use when intermixed)

Clean-room specifications

(Catalog No. CB-033SA)

- Anti-dust generation structure for use in cleanrooms

PPE- ..... **-P70**

PPE- ..... **-P80**

How to order

PPE - V01 - 6

Ⓐ Pressure range

Ⓑ Piping shape

Code	Description
Ⓐ Pressure range	
V01	-101.3 to 0 kPa
P01	0 to 101 kPa
P10	0 to 1 MPa
Ⓑ Piping shape	
6	R1/8
H6-B	ø6 mm plug
H6	In-line of push-in fitting for ø6 (2 pcs.)

Internal structure and parts list

● PPE-□-6

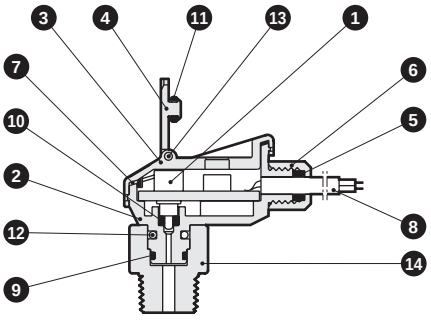

● PPE-□-H6-B

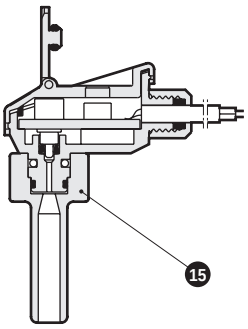

● PPE-□-H6

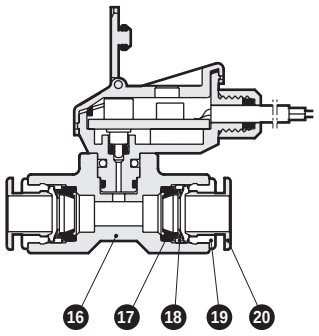

Cannot be disassembled

No.	Part name	Material	No.	Part name	Material
1	Pressure sensor	Diffusion semiconductor strain gauge	11	O-ring	Nitrile rubber
2	Body	Polybutylene terephthalate	12	Stopper	Stainless steel
3	Cover	Polycarbonate	13	Spring pin	Stainless steel
4	Trimmer guard	Polycarbonate	14	R1/8	Polybutylene terephthalate
5	Bush	Nitrile rubber	15	Plug	Polybutylene terephthalate
6	Bush holder	Aluminum	16	Push-in fitting	Polybutylene terephthalate
7	Cover gasket	Silicone rubber	17	Packing	Nitrile rubber
8	Lead wire (3 m)	Polyvinyl chloride	18	Chuck	Copper alloy (electroless nickeling)
9	O-ring	Nitrile rubber	19	Outer ring	Copper alloy (electroless nickeling)
10	O-ring	Nitrile rubber	20	Push ring	Polyacetal

Dimensions

CAD

● PPE-□-6

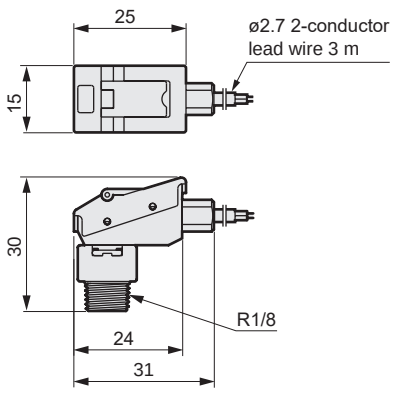

● PPE-□-H6-B

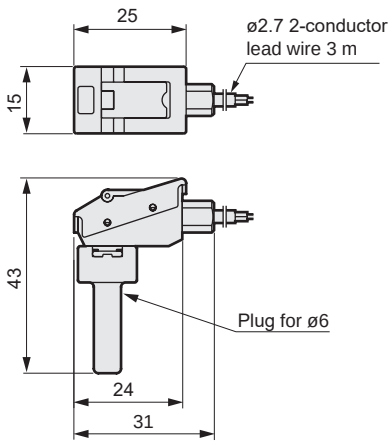

● PPE-□-H6

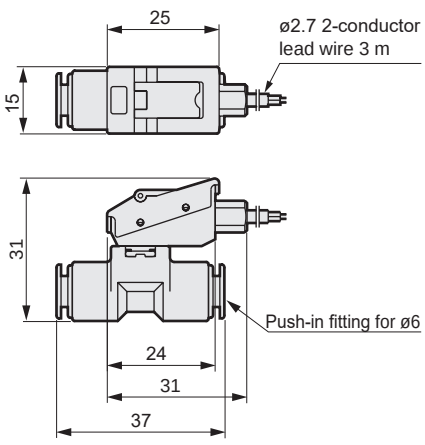

Refer to Safety precautions PPE Series on pages 1220 to 1221 for each component.

Internal circuit / connection method

● Internal circuit diagram

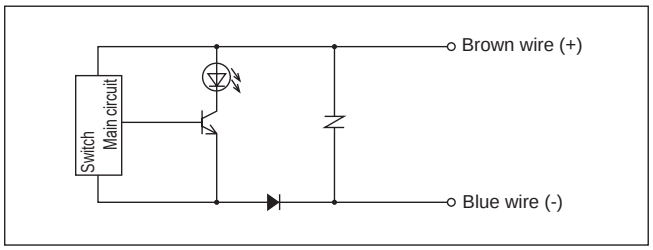

● Connecting the lead wire

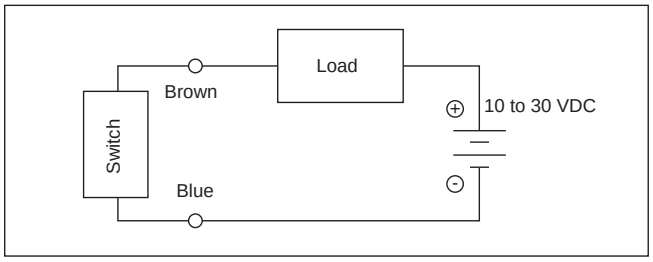

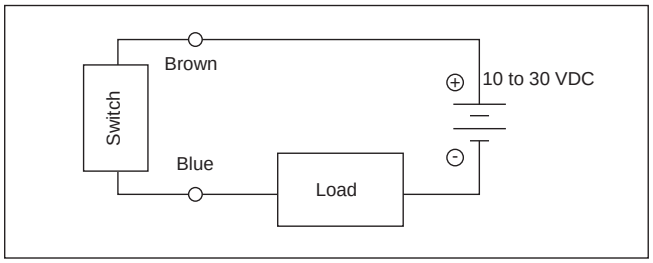

● Connection to programmable controller (PLC)

● Connection to source load input (external electric power supply)

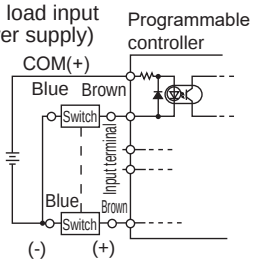

● Connection to source load input (internal electric power supply)

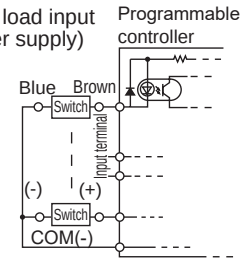

● Connection to sink input

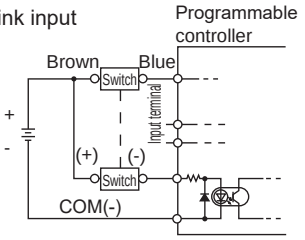

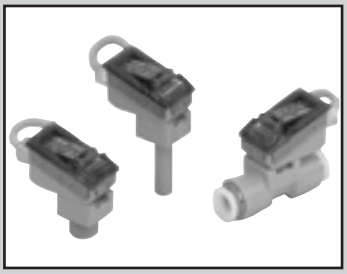

Compact electronic pressure sensor (pressure sensor)
Analog output

PPE-□A Series



Overview

Pressure sensor PPE-A Series is semiconductor pressure sensor developed for pneumatic and vacuum systems. Output proportional to applied voltage: 1 to 5 V (analog output). Usage is flexible due to compact shape and three types of piping connection (R1/8, ø6 plug, ø6 push-in fitting).

Features

- Semiconductor pressure sensor: Used semiconductor sensor pressure detection, high precision and high reliability are realized.
- Analog output : Analog output proportional to applied pressure(1to5V)can be obtained.
- With power supply lamp : When the power supply is energized, green LED lights to show operational status at load short circuit.
- Integrated protection circuit to prevent power reverse connection/load short-circuit Incorrect wiring (Power reverse connection, load short-circuit) protection circuit for .
- Selectable piping connection method: R1/8, ø6 plug, ø6 push-in fitting

Specifications

Model No. / Item	Vacuum	For positive pressure	
	PPE-V01A-□*1	PPE-P01A-□*1	PPE-P10A-□*1
Rated pressure	0 to −100 kPa	0 to 100 kPa	0 to 1 MPa
Plate line color *2	Red	Green	Blue
Pressure sensitive element	Diffusion semiconductor pressure sensor		
Applicable fluid	Air/non-corrosive gas		
Proof pressure	0.3 MPa	0.3 MPa	1.5 MPa
Accuracy	±1% F.S. or less		
Linearity	±0.3% F.S. or less		
Analog output	1 to 5 V (output impedance 1 kΩ)		
Power supply voltage	12 to 24 VDC ± 10% (ripple rate 1% or less)		
Current consumption	10 mA or less		
Display lamp	Green LED lighting when power supply is energized		
Lead wire length	Standard 3 m (oil resistant vinyl cabtyre cable, 3-conductor, 0.15 mm² insulator outer diameter ø1.0)		
Protection circuit	Power reverse connection protection, load short-circuit protection		
Ambient temperature	0 to 50°C(no freezing)		
Temperature characteristics	±0.12% F.S./°C or less		
Insulation resistance	20 MΩ and over at 500 VDC		
Withstand voltage	1000 VAC for 1 minute		
Vibration resistance	10 to 55 Hz compound amplitude 1.5 mm 4 hours per X, Y, Z direction		
Degree of protection	IEC standards IP65 or equivalent		
Piping method	R1/8, ø6 plug, ø6 push-in fitting		
Weight	PPE-□-6/-H6-B: approx. 37 g, PPE-□-H6: Approx. 42 g		

*1: □ section is matched to piping section. (Refer to How to order)
*2: Name plate line is changed by pressure range. (To prevent improper use when intermixed)

Clean-room specifications

(Catalog No.CB-033SA)

- Anti-dust generation structure for use in cleanrooms

PPE-□ A- ····· **P70**

PPE-□ A- ····· **P80**

How to order

PPE - V01 A - 6

Ⓐ Pressure range
Ⓑ Piping shape

Code	Description
Ⓐ Pressure range	
V01	0 to -100 kPa
P01	0 to 100 kPa
P10	0 to 1 MPa
Ⓑ Piping shape	
6	R 1/8
H6-B	ø6 mm plug
H6	In-line of push-in fitting for ø6 (2 pcs.)

Internal structure and parts list

● PPE-□A-6

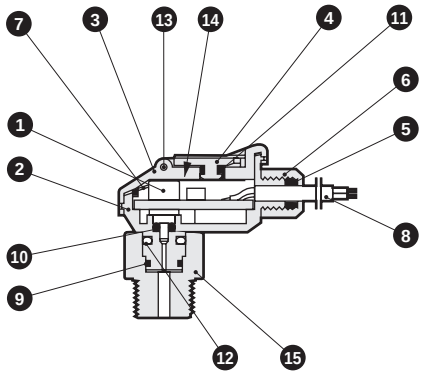

● PPE-□A-H6-B

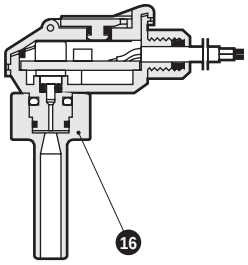

● PPE-□A-H6

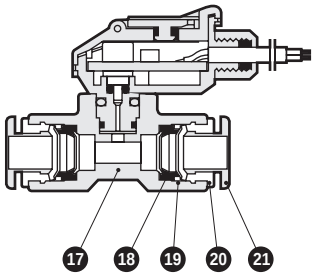

Cannot be disassembled

No.	Part name	Material	No.	Part name	Material
1	Pressure sensor	Diffusion semiconductor strain gauge	12	Stopper	Stainless steel
2	Body	Polybutylene terephthalate	13	Spring pin	Stainless steel
3	Cover	Polycarbonate	14	Shield sheet	Aluminum
4	Trimmer guard	Polycarbonate	15	R1/8	Polybutylene terephthalate
5	Bush	Nitrile rubber	16	Plug	Polybutylene terephthalate
6	Bush holder	Aluminum	17	Push-in fitting	Polybutylene terephthalate
7	Cover gasket	Silicone rubber	18	Packing	Nitrile rubber
8	Lead wire (3 m)	Polyvinyl chloride	19	Chuck	Copper alloy (electroless nickeling)
9	O-ring	Nitrile rubber	20	Outer ring	Copper alloy (electroless nickeling)
10	O-ring	Nitrile rubber	21	Push ring	Polyacetal
11	O-ring	Nitrile rubber			

Dimensions CAD

● PPE-□A-6

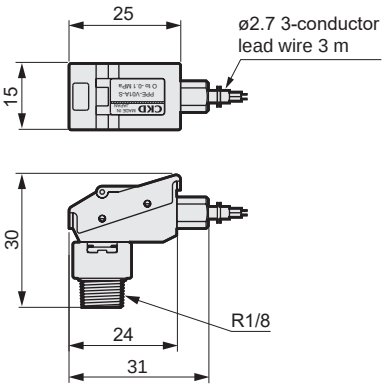

● PPE-□A-H6-B

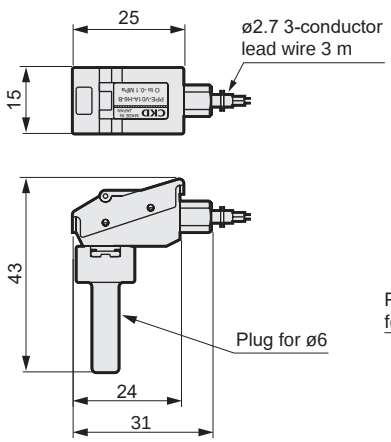

● PPE-□A-H6

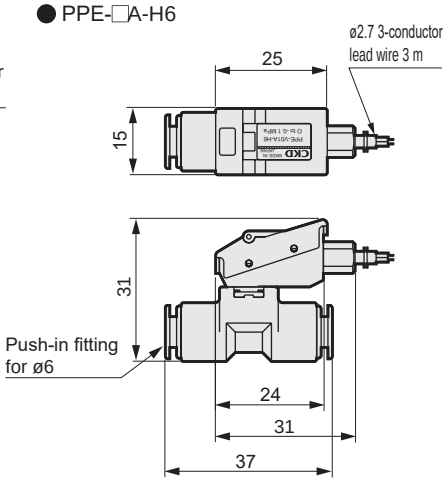

Caution

- Analog output accuracy is affected by temperature characteristics and heat generated when energized. Provide sufficient stand-by time (5 minutes or more after energizing) before use.
- Refer to Safety precautions in PPE-□A Series on pages 1222 to 1223.

Analog output voltage - pressure characteristics

● PPE-V01A-□

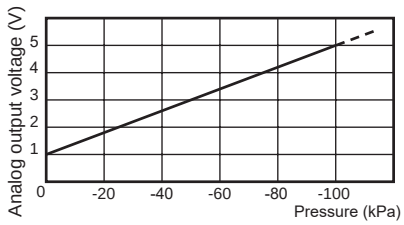

● PPE-P01A-□

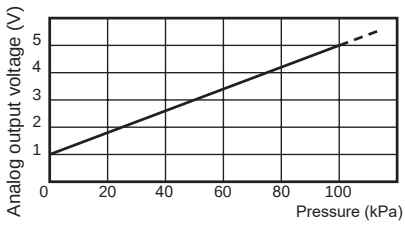

● PPE-P10A-□

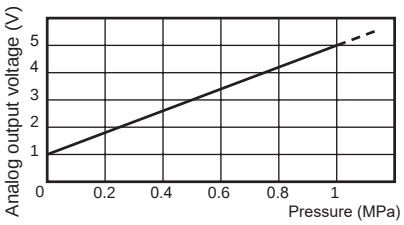

Internal circuit / connection method

[Circuit diagram and connection method]

● Internal circuit diagram

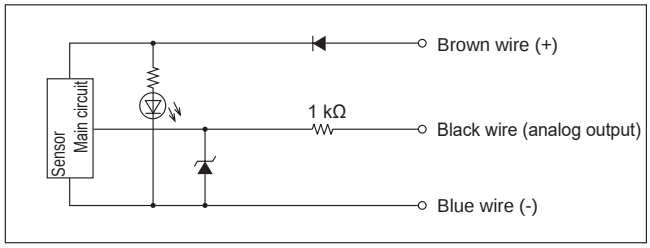

● Lead wire color and description

Line color	Description
Brown	Power supply 12 to 24 VDC
Black	Analog output (1 to 5 V)
Blue	0 V(GND)

● Connecting the lead wire

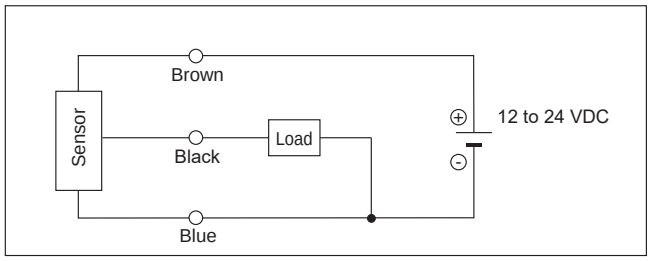



Electronic compact pressure sensor

PPEV-□A Series

Overview

The electronic compact pressure sensor PPEV-A Series is a semiconductor pressure sensor for pneumatic and vacuum systems.
Output proportional to applied voltage: 1 to 5 V (analog output).
Compact with a width of 10mm, it can be connected to small Components such as pneumatic valves for use in output confirmation, etc.

Features

- Semiconductor pressure sensor: Used semiconductor sensor pressure detection, high precision and high reliability are realized.
- Compact and lightweight: Just 10mm wide and g lightweight.
- Connector connection: Uses a connector in the sensor connection part, enabling easy pressure sensor replacement.
- Pneumatic valve output confirmation: 4GR and 3QR Series and In combination, confirm output and vacuum suctionbefore use.

Specifications

Item		Positive pressure	Negative pressure
		PPEV-P10A-□	PPEV-V01A-□
Working pressure		0 to 1.0 MPa	-100 kPa to 0
Service voltage		10.8 to 30.0 VDC	
Current consumption		5 mA (24 VDC, no load)	
Pressure detection method		Diffused semiconductor pressure switch	
Applicable fluid		Compressed air	
Proof pressure		1.5 MPa	0.5 MPa
Ambient temperature		0 to 55°C	
Analog output	Output voltage	1 to 5V	
	Zero point voltage	1±0.1V	
	Linearity	±0.5% F.S. max	
	Temperature characteristics	±2% F.S. max	
	Output current	0.5 mA max. (load resistance 10 kΩ)	
Indicator		None	
Wiring method		Connector connection	
Wire length		1000 mm	
Insulation resistance		20 MΩ and over at 500 VDC	
Withstand voltage		1000 VAC for 1 minute	
Shock resistance		300m/s^2 or less	
Vibration resistance		50m/s^2 or less	
Degree of protection		Dust-proof	
Piping method		M5, ø4 plug, ø6 plug	
Weight *1		PPEV-□-M5:11.2g, PPEV-□-H-4B:10.7g, PPEV-□-H-6B:11.1g	

*1: Weight includes the connector wiring.

How to order

PPEV – P10A – H4-B

- PPEV: Model No.
- P10A: Pressure range
- H4-B: Port size

Code	Description	
Pressure range		
P10A	0 to 1 MPa	●
V01A	-100 to 0 kPa	-
Port size		
H4-B	ø4 mm plug	●
H6-B	ø6 mm plug	●
M5	M5	●

Internal structure

PPEV-□A-M5

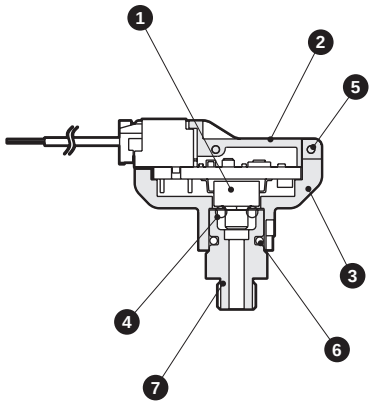

PPEV-□A-H4 (H6)

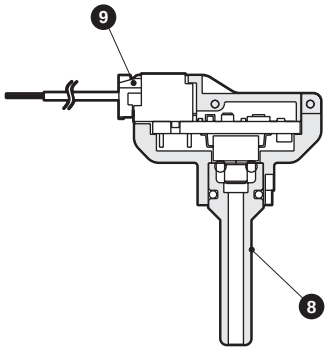

No.	Part name	Material	No.	Part name	Material
1	Pressure sensor	Diffusion semiconductor strain gauge	6	Fixing clip	Stainless steel
2	Cover	Resin	7	M5 piping adapter	Aluminum
3	Case	Resin	8	ø4 piping adapter	Resin
4	O-ring	Nitrile rubber	9	Connector	-
5	Spring pin	Stainless steel			

Dimensions

PPEV-□A-M5

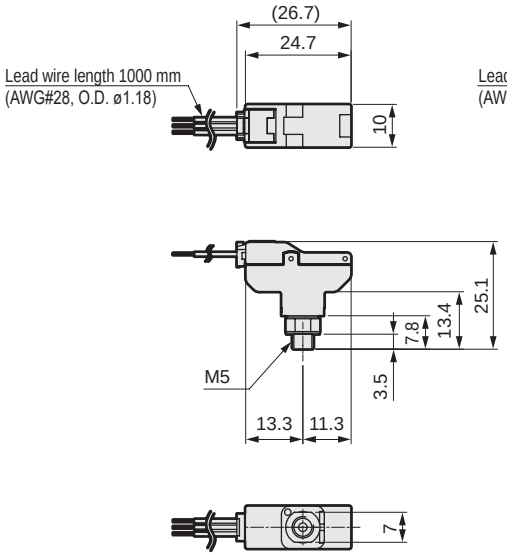

PPEV-□A-H4

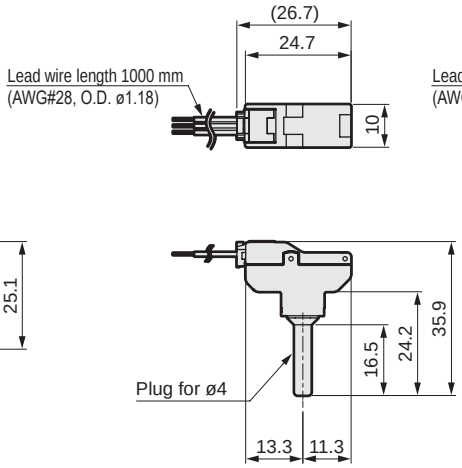

PPEV-□A-H6

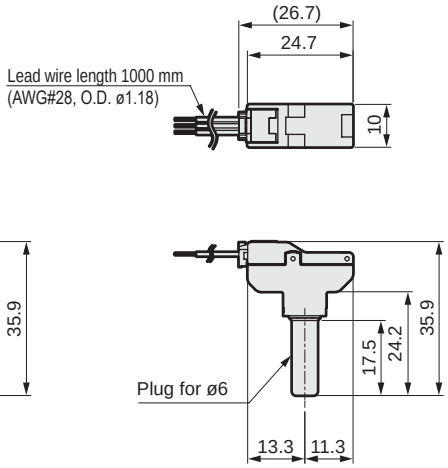

Precautions

- Analog output accuracy is affected by temperature characteristics and heat generated when energized. Provide sufficient stand-by time (5 minutes or more after energizing) before use.

Analog output voltage - pressure characteristics

● PPEV-P10A

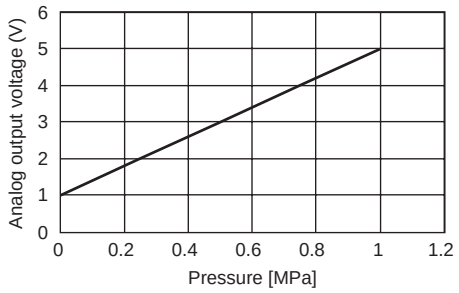

● PPEV-V01A

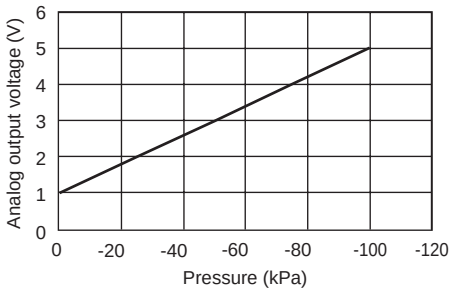

Circuit diagram and wiring method

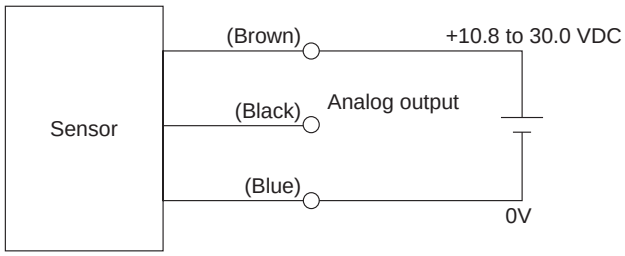

Lead wire color and description

Line color	Description
Brown	Power supply (10.8 to 30.0 VDC)
Black	Analog output (1 to 5 V)
Blue	GND (0 V)

*The analog output impedance is 10 Ω. When connecting a load resistor, use 10 kΩ or more.

$$\text{Output value} = \left(1 - \frac{R_0}{R_0 + R_x}\right) \times 100\%$$

$$\text{Output value} = \left(1 - \frac{10}{10+10000}\right) \times 100\% = 99.9\%$$

Output value error
approx. 0.1%

Pressure sensor impedance: R_0 = 10 Ω
Load internal impedance: R_x = 10 kΩ

MEMO



Electronic pressure switch (pressure switch)

PSW Series

High precision pressure switch with semiconductor pressure sensor.

Planned for October end of production 2021

RoHS CAD

Overview

This product is a reliable pressure switch developed for pneumatics/vacuum systems. Due to a semiconductor pressure sensor, high precision and high speed response are achieved.

Features

- Fast response time (10 ms)
- With no movable parts, high reliability and long durability are achieved.
- Adoption of multi-rotation trimmer and built-in operation indicator lamp make settings easy.
- Accuracy ±3%F.S.

Specifications

Item	PSW-P01	PSW-P10	PSW-V01
Pressure sensitive element	Diffusion semiconductor pressure sensor		
Applicable fluid	Air/non-corrosive gas		
Rated pressure	0 to 100 kPa	0 to 1 MPa	0 to -100 kPa
Proof pressure	F.S. x 1.5 times		
Accuracy	±3% F.S. (0 to 50°C)		
Display lamp	Red LED lit when ON		
Hysteresis	2% F.S. or less		
Operating ambient temperature	0 to 50°C		
Storage ambient temperature	-20 to 80°C (no freezing)		
Response time	10 ms or less		
Switch output	NPN transistor open collector MAX30 V 80mA		
Analog output Note	1 to 5 VDC (0 to F.S.) ±3%F.S. (25°C)		
Power supply voltage	11 to 26 VDC 30 mA (ripple rate 1% or less)		
Vibration resistance	10 to 55 Hz compound amplitude 1.5 mm 2 hours per X, Y, Z direction		
Lead wire	1.5 m Shielded wire		
Weight	Approx. 80 g (body: approx. 60 g, mounting bracket: approx. 20 g)		

Note: Voltage of analog output may vary within 1±0.4 VDC to 5±0.8 VDC per product.

How to order

PSW – P01

Ⓐ Pressure range

Code	Description
Ⓐ **Pressure range**	
P01	0 to 100 kPa
P10	0 to 1 MPa
V01	0 to -100 kPa

Configuration diagram

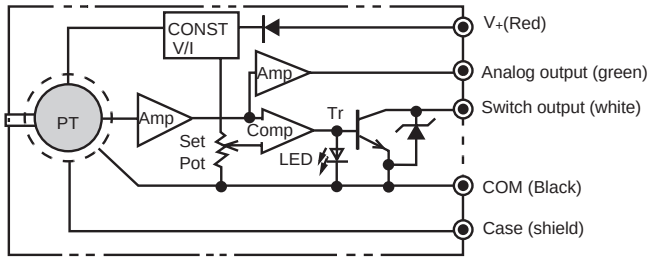

- Red LED lights when turning ON.
- Care must be taken when handling lead wire.

Example of wiring

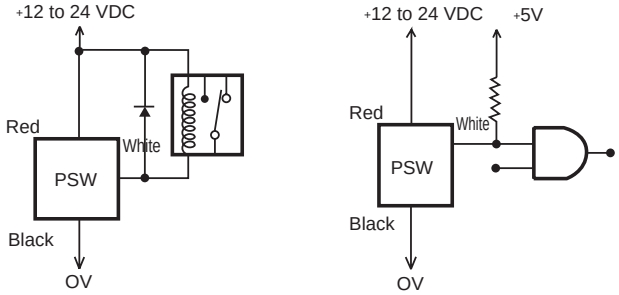

Dimensions

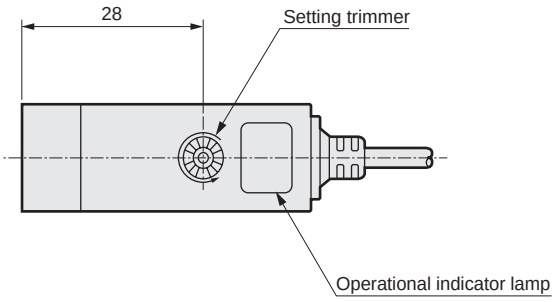

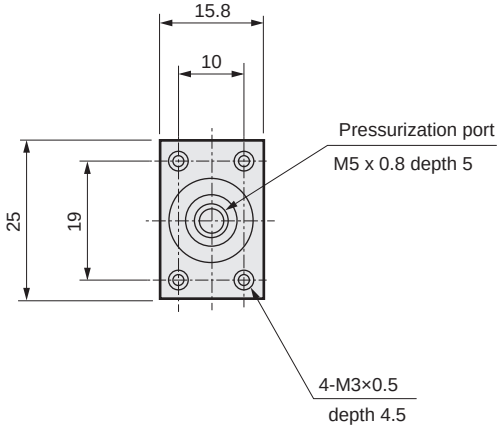

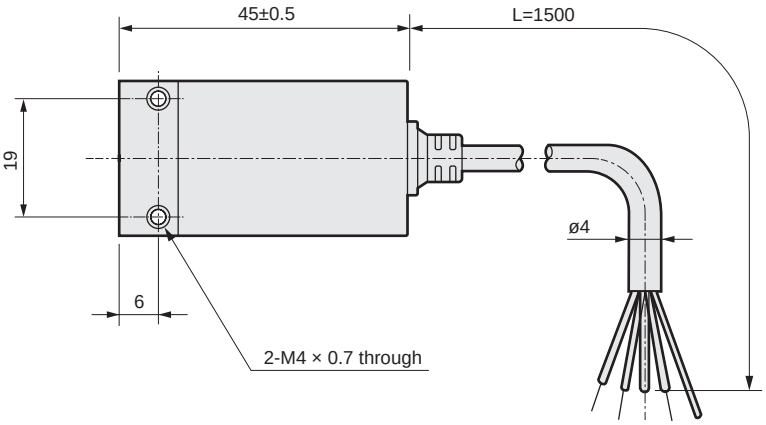

● Pressure port section details (Note)

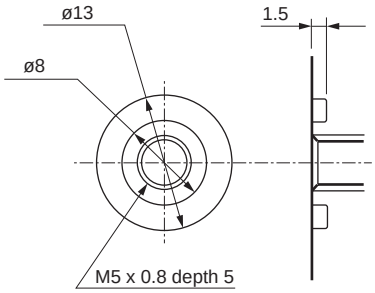

(Note) Compatible O-ring (JIS B2401)
For positive pressure: P10
For negative pressure: P8

● Mounting bracket (accessory)

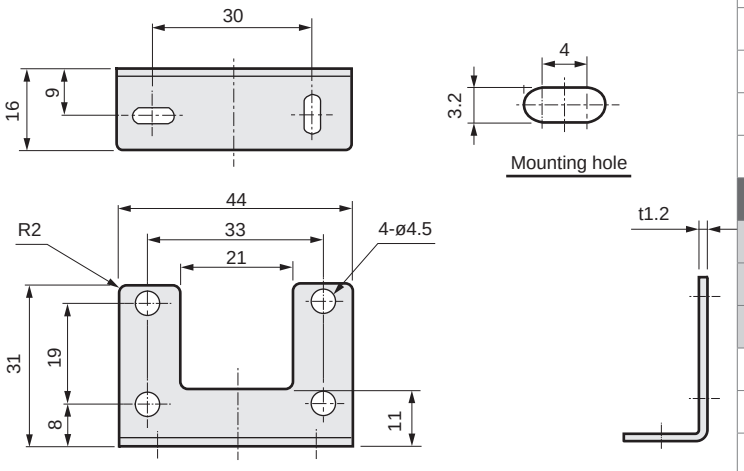

Material : SPCC
Treatment: Ni plating
Weight : Approx. 20 g

Refer to Safety precautions PSW Series on page 1224 for details.



Modular F.R.L. dedicated for regulator mounting
Digital pressure sensor

PPR Series

Features

■ Twin display improves visibility

2-screen display enables confirmation of both the display value and the set value. Check the display value (current value) on the main display and the set value on the sub-display.

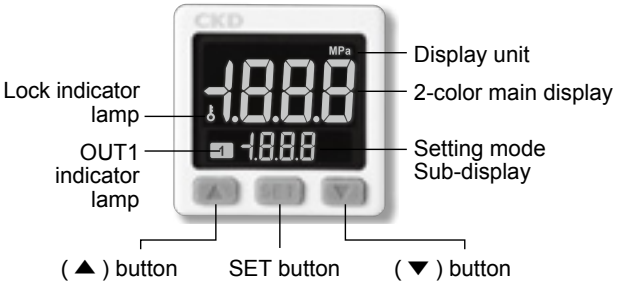

■ Dedicated adapter keeps it compact

Mounting the pressure switch with a dedicated adaptor keeps it compact and sleek.

■ Easy-to-read display

3-color display

The display value and set value are displayed in three colors (red, green, orange). The main display changes between green and red in conjunction with output ON/OFF.



■ Prevents misoperation

Lock function

Prevents misoperation such as touching the wrong key.

■ Saves power with display OFF when not setting

Energy saving mode function

In energy saving mode, the display will turn OFF after 30 seconds unless a button is pressed.

Specifications

1 MPa ≈ 145.0 psi, 1 MPa = 10 bar

Item			PPR-□	
Rated pressure			0.000 (≈0 psi, 0 bar) to 1.000 MPa (≈145 psi, 10 bar)	
Set pressure			-0.100 (≈-14 psi, -1 bar) to 1.000 MPa (≈145 psi, 10 bar)	
Proof pressure			1.5 MPa (≈217 psi, 15 bar)	
Applicable fluids			Compressed air	
Display unit		MPa	0.001 (≈0 psi, 0 bar)	
Power supply voltage			12 to 24 VDC ±10% ripple (P-P) 10% or less	
Current consumption			40 mA or less (no load)	
Switch output			NPN: Transistor, open collector Max. load current: 125 mA Max. power supply voltage: 30 VDC Internal voltage drop: 1.5 V or less	PNP: Transistor, open collector Max. load current: 125 mA Max. power supply voltage: 24 VDC Internal voltage drop: 1.5 V or less
Repeatability (switch output)			±0.2% F.S. ±1 digit or less	
Hysteresis	One-point setting mode		Adjustment is possible	
	Hysteresis mode			
	Window comparator mode			
Output response time			Chattering prevention: Selectable from 0.05 s, 0.25 s, 0.5 s, 1 s, 2 s and 3 s	
Switch output load short-circuit protection			Yes	
7-segment LCD			Main /Unit sub-display: 2 colors (red, green) Sub-display: Orange (sampling rate: 5 times/sec)	
Display accuracy			±2% F.S. ±1 digit or less (standard temperature: 25 (77°F) ±3°C (37°F))	
Display lamp			Orange (OUT1)	
Environmental resistance	Degree of protection		IP40	
	Ambient temperature		Usage: 0 (32°F) to 50°C (122°F), Storage: -10 (14°F) to 60°C (140°F) (no condensation or freezing)	
	Ambient humidity		Usage/Storage: 35 to 85% RH (no condensation)	
	Withstand voltage		1000 VAC, 1 minute (between the case and lead wire)	
	Insulation resistance		50 MΩ or less (500 VDC, between the case and lead wire)	
	Vibration resistance		Compound amplitude: 1.5 mm or 100 m/s^2, 10 Hz to 150 Hz to 10 Hz per minute, 2 hours each in X, Y, Z directions.	
	Impact resistance		100 m/s^2 (10 G), 3 times each in X, Y, Z directions	
Temperature characteristics			±2% F.S. or less (25°C (77°F) reference) temperature range 0 (32°F) to 50°C (122°F)	
Lead wire			Oil resistant cable (0.15 mm^2)	
Weight			Approx. 65 g (Lead wire 2 m)	

How to order

PPR - N - 1

A Output B Series

Code	Description
A Output	
N	NPN transistor output 1 point
P	PNP transistor output 1 point
B Series	
1	For 1000 Series
2	For 2000 Series
3	For 3000, 4000, 6000, 8000 Series, CXU30-D4
4	For CXU10-D4

Precautions for model No. selection

*1: An adapter, fixing pin, 2 mounting screws and 2 O-rings are included.

Dimensions

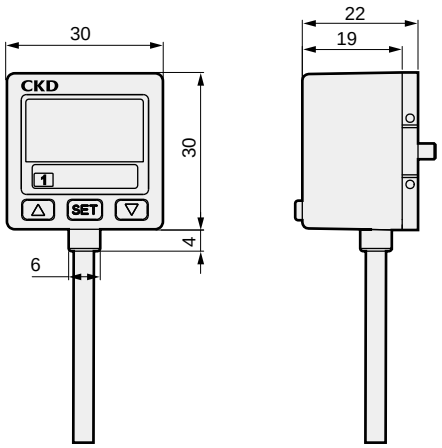

Internal circuit / connection method

NPN output

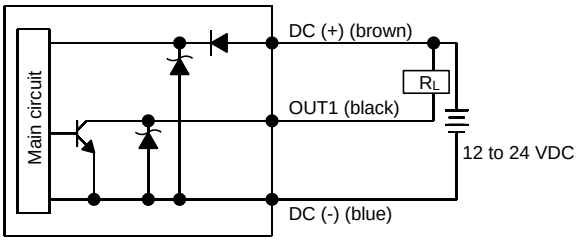

PNP output

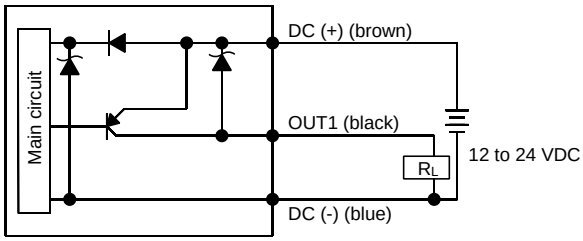

Safety precautions

- For safety, be sure to turn the power OFF before connecting the sensor.
- Regarding the sensor to be connected, follow the instructions in the sensor's instruction manual.

Pneumatic components (electronic pressure switch and sensor)

Safety Precautions

Be sure to read this section before use.
Refer to Intro Page 63 for general precautions regarding pneumatic components and refer to "⚠ Safety precautions" for detailed precautions for individual series.

Design/selection

⚠ WARNING

■ Use this product in accordance with specifications.
- Use for applications, or at load currents, voltages, temperatures, impacts or sites excluded from the specifications could result in damage or malfunctions.

■ Do not use oxygen, corrosive or combustible gas, or toxic fluid for this product.

■ Never use this product in an explosive gas atmosphere.
- The pressure switch does not have an explosive-proof structure. Never use in an explosive gas atmosphere as explosions or fires could result.

■ Avoid installing this product in a sealed control box or indoors.
- If the fluid should leak due to any trouble, the pressure in the sealed chamber could change and create a hazardous state. Use this product in the control box having safety device to control internal pressure, or indoors with no pressure differential from the outside.

■ Power supply voltage

Do not use this product at levels exceeding the power supply voltage. The product could rupture or burn if voltage exceeding the working range is applied or if an AC power supply (100 VAC) is applied.

■ Load short-circuit

Do not short-circuit the load. Failure to observe this could result in rupture or burning.

■ Incorrect wiring

Avoid incorrect wiring such as mistaken power source polarities, etc. Failure to observe this could result in rupture or burning.

⚠ CAUTION

■ Applicable fluid

When using applicable fluid other than air; nitrogen gas, etc., oxygen deficiency could be caused. Observe the following instructions.
- Use in well ventilated locations.
- Ventilate the work area when nitrogen gas is being used.
- Inspect nitrogen gas piping regularly to avoid leaks.
- Non-corrosive gas means substances such as nitrogen or carbon dioxide contained in air and inert gases such as argon or neon.
- When using this product for compressed air containing water or oil, use the PPD3-S (stainless steel diaphragm sensor specifications) with increased corrosion resistance.

■ If this product is used for vacuum suction confirmation, care must be taken for following matters.
- When applying positive pressure for vacuum burst onto the product, check that theshould not be used.

■ Working environment
- Avoid using this product where vibration or impact exceeding 100 m/s^2 could be applied.
- Check the temperature of fluid being measured and the environmental temperature in piping.
- When using a type that does not have the corresponding degree of protection, do not use for applications in which water or oil could be applied.

■ Determine the setting, taking error caused by accuracy limitations and temperature characteristics into consideration.

■ Take care when using this product for an interlock circuit.
- When using the pressure switch for an interlock signal requiring high reliability, provide a double interlock by installing a mechanical protection function or a switch (sensor) other than a pressure switch as a safeguard against Breakdown. Regularly inspect and confirm that the interlock activates correctly.

[Recommended values]

Model	Degree of protection
PPX/PPR	IP40
PPE(-A)/PPD3(-S)/PPG-C	IP65

■ Response time is affected by working pressure and load volume. If reproducibility with stable response time is required, install a regulator in the proceeding stage.

■ Take the following countermeasures to prevent malfunction caused by noise.
- AC Install a line filter in the power supply line.
- Do not share power with an inverter or a component causing motor noise, etc.
- Use a surge suppressor such as a CR or diode on the inductive load (solenoid valve, relay, etc.) and remove noise from the source.
- When using a device such as a switching regulator or inverter motor that could generate noise near the sensor, be sure to ground the device frame ground (F.G.) terminal.
- Separate wiring to the sensors from strong magnetic fields.
- Connect wiring to the sensors with a shield component.
- Ground the shield wire on the power supply side.

■ When releasing the secondary control pressure, such as air blowing, into the atmosphere, the pressure could fluctuate depending on the piping and flow conditions. Test under actual working conditions, or contact CKD before using this method.

■ When selecting dryer, air filter, oil mist filter or regulator, select a device with a flow rate higher than that used by proportional pressure controls.

■ Working conditions for CE compliance

The standard for the immunity for industrial environments applied to CE conforming product is EN61000-6-2, but the following requirements must be satisfied in order to conform to this standard.

Conditions
- The assessment of this product is performed by using a cable pairing a power supply line and a signal line, assessing this cable as a signal line.
- This product is not equipped with surge protection. Implement surge protection measures on the system side.

Mounting, installation and adjustment

⚠ WARNING

■ Avoid incorrect connection.
- Incorrect connection could result in fatal damage not only to the product itself but also to peripheral devices.

■ DC power not insulated from AC primary side may damage the product and power, so an electric shock could occur. Do not use the product in this case.

⚠ CAUTION

■ Do not use the product where the product is exposed to direct sunlight or may come in contact with water, oil, etc.

■ Flush with air the piping connected to sensors before connecting. Also, make sure that sealing tape does not enter during piping.

■ Correct pressure control is not possible if the exhaust port is plugged. Release this port into the atmosphere. ■ Tighten pipes with the appropriate torque.
- The purpose is to prevent air leakage and damage to bolts.
- First tighten the bolts by hand to ensure that the threads are not damaged, then use a tool.

Port thread	Tightening torque N·m
M3	0.3 to 0.6
M5	1 to 1.5
Rc1/8	3 to 5
Rc1/8 (resin)	1 to 1.5



■ Care must be taken for protection of body and lead wire.
- Do not bump or drop the body, or apply excessive bending or tensile strength to the lead wire. This may lead to disconnection.
- Connect and wire bending resistant material, such as robot wire material for movable sections.

■ Wiring
- Turn power OFF before wiring this product. Discharge static electricity from personnel and tools before and during work.
- Use a stabilized noise-free power supply with a ripple voltage of 1% or less.

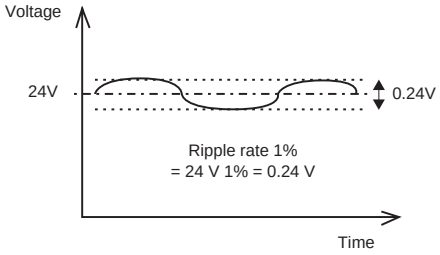

- Turn the power ON and OFF when voltage rises or falls quickly. If the rated voltage is not reached, the sensor could malfunction. In some cases, the sensor may not recover after the rated voltage is reached. Reset the power in that case. Even if the rated voltage drops temporarily, shut down the power once, then turn ON the power again.
- Install this product and wiring as far away as possible from sources of noise such as power distribution wires. Take separate measures against surge generated from inductive loads that enters the power wire.
- Do not start the control unit, machinery and equipment immediately after wiring. Unpredictable signals could be output due to incorrectly set values. First, the plant and equipment are stopped, Conduct test and set the required switch.

■ Stop the machinery and equipment and confirm safety before setting switch outputs.

■ Be sure to operate keys with fingertips. If sharp instruments, such as knives or screwdrivers, are allowed to contact the plastic film on the operation section, they may damage the film and compromise its protective functions.

■ Piping
- For the push-in fitting, use the recommended tube, and perform piping work to the push-in fitting assembly after brushing.
  * Recommended tube: Compatible tube outer diameter 6 mm manufactured by CKD F-1506, U-9506 and others.
- For the screw-in fitting, wind sealing tape or apply a sealant, and screw in without tightening excessively. Apply a wrench to the metal section when tightening. (Resin section for PPE and PPD3-R□D-6 only)
- Wrap sealing tape from threads starting 2 mm inside from the end of piping threads.
  * If sealing tape protrudes from the pipe threads, it could be cut when screwing the bolts in. This could cause the tape to enter the components, causing failures.

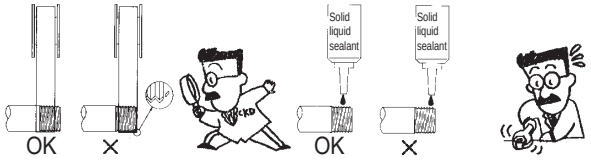

- Set the pipe length to approx. 1 m, and take care not to apply tension or impact to the piping. For longer tubes, due to their own weight and vibration/impact, unexpected tensile strength is generation. In order not to apply weight, fix and relay the tube to the machine device in the middle of the piping.

■ Avoid connecting the output for a relay contact, operation switch, or other component output in parallel with the PLC to the product's output, or short-circuit the input terminal of the PLC to which this product is connected with the power supply cable's negative side to test the input device. This product's output circuit could be damaged.

Mounting, installation and adjustment

⚠CAUTION

■Some models have a push-in fitting for the measured pressure port. Check the perpendicularity of the tube side, and check that there are no scratches, indents, or dirt near the end. Air and compressed air are measured. Check that water and dirt do not enter the tube during piping.

Use/maintenance

⚠WARNING

■Do not apply overcurrent.

● If overcurrent flows to the pressure switch due to a load short-circuit, etc., the pressure switch will be damaged with a risk of ignition. Provide an overcurrent protection circuit, such as a fuse, for the output wire and power cable as needed.

⚠CAUTION

■Do not disassemble the products.

● The product could be damaged or its performance compromised if it is disassembled. CKD does not guarantee performance after disassembly. Remove the entire installation section (pressurized port section) when replacing or moving the product.

■Stop machinery and equipment, then check the safety before operating the product.

■With PPD3, pressure is detected 200 times per second, but this display is updated 4 times a second. and cannot track fast pressure changes. The switch could therefore start operating at a quickly changing pressure even when the display does not indicate the switch setting.

■The case is made of resin. Do not use solvent, alcohol or detergent in cleaning, since the resin could absorb it. There is a risk of affecting the resin. Wipe off dirt with a rag soaked in a diluted neutral detergent solution and wrung out well.

■Pay attention to reverse currents caused by disconnected wires and wiring resistance.

When other devices, including pressure switches, are connected to the same power supply as the pressure switch, and the output cable and power cable's minus side are short-circuited or the power supply's minus side is disconnected to check operation of the input device from the control panel, reverse current could flow to the pressure switch's output circuit and cause damage.

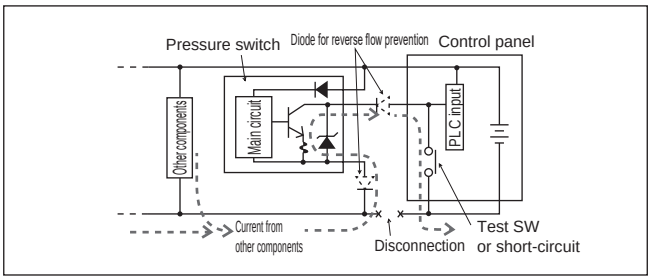

Take the following measures to prevent damage caused by reverse current:

(1) Avoid centralizing current at the power cable, especially the negative side power cable, and use as thick a cable as possible.
(2) Limit the number of devices connected to the same power supply as the pressure switch.
(3) Insert a diode in serial with the pressure switch's output cable to prevent reverse current.
(4) Insert a diode in serial with the pressure switch's power cable negative side to prevent reverse current.

■Pay attention to surge current flow-around.

When pressure switch power is shared with an inductive load that generates surges, such as a solenoid valve or relay, if the circuit is cut off while the inductive load is functioning, surge current could enter the output circuit and cause damage depending on where the surge absorbing element is installed.

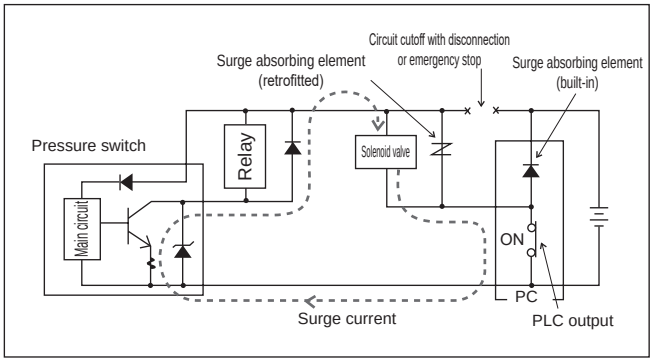

Take the measures below to prevent damage from sneak surge current.

(1) Separate the power supply for the output system comprising the inductive load, such as the solenoid valve and relay, and the input system, such as the pressure switch.
(2) If a separate power supply cannot be used, directly install a surge absorption element for all inductive loads. Consider that the surge absorption element connected to the PLC, etc., protects only the individual device.
(3) Connect a surge absorption element to places on the power wiring shown in the figure below, as a measure against disconnections in unspecified areas.

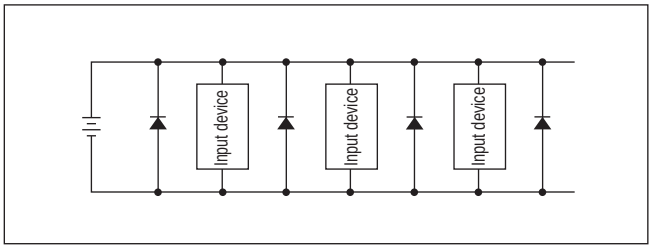

When the devices are connected to a connector, the output circuit could be damaged by the above phenomenon if the connector is disconnected while the power is ON. Turn power OFF before connecting or disconnecting the connector.

Product-specific cautions: Electronic pressure switch/PPE Series

Design/selection

⚠WARNING

■The main body and fitting connection rotate, but this section should not repeatedly rotate during use.

■The degree of protection is equivalent to IP65, but this product must not be used in an environment where it could come in contact with water. Check that coolant does not come in contact.

■Be careful of internal voltage drop.

● When using with a voltage less than the specified voltage, the pressure switch may be activated correctly, but the load may not function correctly. Check the load working voltage to see that the following expression is satisfied:

Power supply voltage - internal voltage drop > load working voltage

■Pay attention to the leakage current.

● Even when the 2-wire pressure switch is OFF, the current (leakage current) flows to operate the internal circuit. (1 mA or less)

Load working current > leakage current

If the above expression is not satisfied, the switch may be interpreted as ON even when it is OFF, and operation fail. Use the 3-wire PPD if specifications are not met. If n units are connected in parallel, the current that flows to the load increases n-fold.

■The customer is responsible for checking safety and taking appropriate countermeasures for using fluids other than applicable fluids. Do not use this product for corrosive or flammable gases or for oxygen.

Mounting, installation and adjustment

⚠CAUTION

■Handling the product

● When installing the product, hold the body section so that impact is not applied to the body and excessive stress is not applied to the lead wire.

● Do not disassemble or dismantle the product. The product could be damaged or its performance compromised if it is disassembled. CKD does not guarantee performance after disassembly.

■Load short circuit protection circuit

● If the load is inadvertently short-circuited, the internal load short-circuit protection circuit is activated and the switch remains OFF. Fix wiring, then turn power OFF, or short-circuit the PPE's brown and blue wires to recover normal switch operations.

[Precautions for installation]

■Driver

Use a flathead screwdriver corresponding to the trimmer groove (0.5 W x 2.3 L x 0.5 D) or a Phillips screwdriver for 1 bit to set the trimmer.

■Trimmer

The rotation range of the trimmer is 240 degrees. The trimmer could be damaged if turned any further or if turned forcibly.

■Opening and closing the trimmer guard

Use a flathead screwdriver to open the trimmer guard and set the trimmer. After setting, press the trimmer guard with a finger and completely close it. The degree of protection (IP65) is not satisfied if the cover is not completely closed.

Setting pressure and switch operations

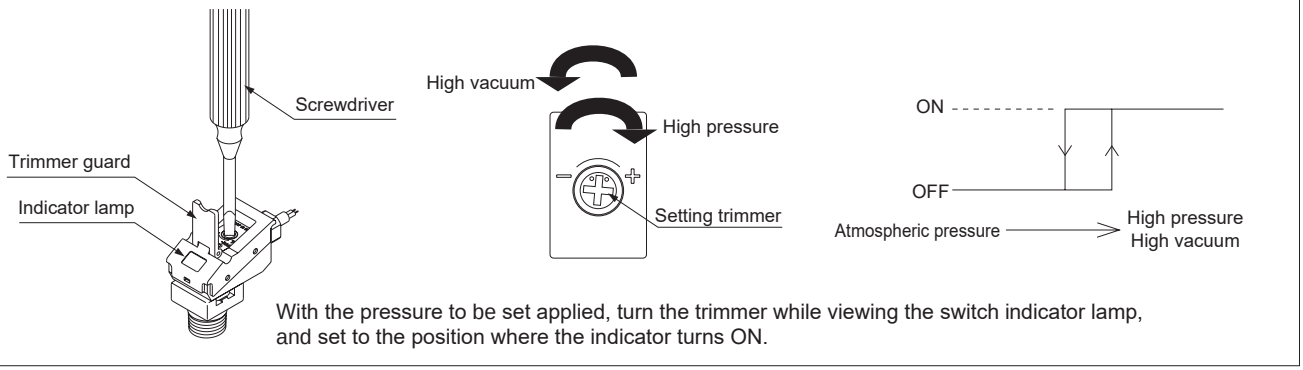

With the pressure to be set applied, turn the trimmer while viewing the switch indicator lamp, and set to the position where the indicator turns ON.

Piping method

PPE-□-6	PPE-□-H6-B	PPE-□-H6
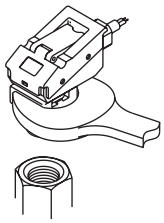	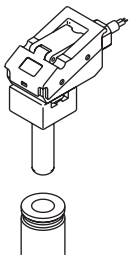	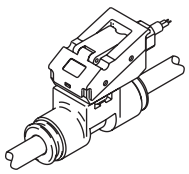
Use sealing tape or sealant, and catch a wrench against the width across flats (13 mm) of the R1/8 fitting to install. (Precautions) · The tightening torque is 1.0 to 1.5 N·m or less. Resin parts may be damaged if tightened too far.	Insert the CKD 6 mm tube push-in fitting and use. (Precautions) · Securely insert the plug section, and check that the plug is not dislocated. If the plug is not fully inserted, it could be dislocated or air could leak. · Use the applicable push-in fitting. GW Series GWJ Series	Insert the 6 mm tube into the two push-in fittings and use. (Precautions) · Use the designated tube and plastic plug. Tube outer diameter accuracy Nylon, soft nylon tube : Within ±0.1 mm Polyurethane tube : Within +0.1 mm New urethane tube : -0.2 mm and with hardness of 93° and over. · Securely insert the tube to the tube end, and make sure that the tube cannot be pulled off. If the tube is not fully inserted, it could be dislocated or air could leak. · Cut the tube with a dedicated cutter and always at a right angle.

Product-specific cautions: Electronic pressure sensor analog output PPE-□A Series

Design/selection

⚠ WARNING

■ Wiring

Turn power OFF before wiring this product. Discharge static electricity charged in the human body, tool or equipment before and during operation. Connect and wire bending-resistant material, such as robot wire material, for the movable sections.

■ Installation:

Install this product and wiring as far away as possible from sources of noise such as power distribution wires. Take separate countermeasures against surge that enter the power wire.

■ Power supply voltage

Do not use this product at levels exceeding the power supply voltage. The product could rupture or burn if voltage exceeding the working range is applied or if an AC power supply (100 VAC) is applied.

■ Load short-circuit

Do not short-circuit the load. Failure to observe this could result in rupture or burning.

■ Incorrect wiring

Avoid incorrect wiring such as mistaken power source polarities, etc. Failure to observe this could result in rupture or burning.

■ Connecting load

When connecting an inductive load such as relay or solenoid valve, a surge voltage is generated when the switch is turned OFF. Directly connect a flywheel diode onto all inductive loads in the same power circuit.

■ Connecting load

The output impedance of the analog output section is 1 kΩ . If the impedance of the connecting load is small, output error increases. Check error with the impedance of the connecting load before using.

Example of calculation

(PPE-□A output impedance : Ro = 1 kΩ
Load internal impedance : Rx = 1 MΩ

$$\text{Output value} = \left(1 - \frac{Ro}{Ro+Rx}\right) \times 100\%$$

$$= \left(1 - \frac{1\ k\Omega}{1\ k\Omega+1M\Omega}\right) \times 100\%$$

Output value error ⇨approx. 0.1%

Mounting, installation and adjustment

⚠ CAUTION

■ When installing the product, hold the body section so that impact is not applied to the body and excessive stress is not applied to the lead wire.

■ When applying positive pressure for vacuum burst to the product to check vacuum suction, check that it does not exceed the specified proof pressure.

■ Do not disassemble or dismantle the product. The product could be damaged or its performance compromised if it is disassembled.CKD does not guarantee performance after disassembly.

■ The main body and fitting connection rotate, but this section should not repeatedly rotate during use.

■ The degree of protection is equivalent to IP65, but this product must not be used in an environment where it could come in contact with water. Check that coolant does not come in contact.

[Piping method]

PPE-□A-6	PPE-□A-H6-B	PPE-□A-H6
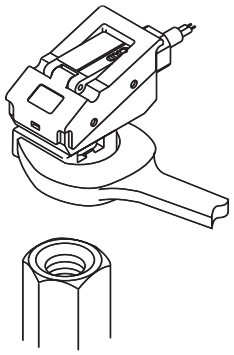	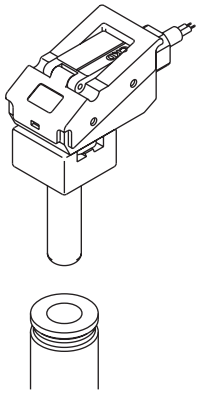	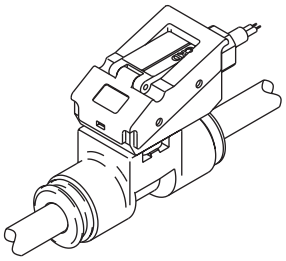
Use sealing tape or sealant, and catch a wrench against the width across flats (13 mm) of the R1/8 fitting to install. (Precautions) · The tightening torque is 1.0 to 1.5 N·m or less. Resin parts may be damaged if tightened too far.	Insert the CKD 6 mm tube push-in fitting and use. (Precautions) · Securely insert the plug section, and check that the plug is not dislocated. If the plug is not fully inserted, it could be dislocated or air could leak. · Use the applicable push-in fitting. GW Series GWJ Series	Insert the 6 mm tube into the two push-in fittings and use. (Precautions) · Use the designated tube and plastic plug. Tube outer diameter accuracy Nylon, soft nylon tube : Within ±0.1 mm Polyurethane tube : Within +0.1 mm New urethane tube : -0.2 mm and with hardness of 93° and over. · Securely insert the tube to the tube end, and make sure that the tube cannot be pulled off. If the tube is not fully inserted, it could be dislocated or air could leak. · Cut the tube with a dedicated cutter and always at a right angle.

Product-specific cautions: Electronic pressure switch PSW Series

Mounting, installation and adjustment

⚠ CAUTION

- When connecting an inductive load, install a surge suppressor within 0.5 m of the load, and eliminate noise at the source.
- Load impedance of analog output must be 10 kΩ and over.

Product-specific cautions: Electronic pressure sensor with digital display PPG-D Series

Design/selection

⚠ CAUTION

- Environment inspection is only available for “RoHS certificate” and “REACH certificate”. Detailed data at the parts level is not supported.

Mounting, installation and adjustment

⚠ CAUTION

- As degree of protection IP65 is used, be sure to assemble the protector (parts) attached with the product for use. When constantly exposed to water, introduce normal atmosphere with a long tube.

Product-specific cautions: Digital pressure sensor PPX Series

Design/selection

⚠ CAUTION

■ Working conditions for CE compliance

● The PPX Series is a CE-compliant product following EMC Directives. EN61000-6-2; regulation matched to immunity applies to this product. Conditions below are necessary to comply with these standards.

Conditions

● The power cable connected to the sensor must be less than 10 m long.

Mounting, installation and adjustment

⚠ WARNING

■ When using a commercially available switching regulator on the power supply, be sure to ground the power supply frame ground (F.G.) terminal.

⚠ CAUTION

■ Avoid use in high steam and dirt environments.

■ Care must be taken to avoid product contact with organic solvents such as thinner, water, oil and fat.

■ Do not put a wire, etc., into the pressure port. The diaphragm may be damaged, resulting in malfunction.

■ The expected performance may not be obtained in a strong electromagnetic field.

■ Flush with air the piping connected to sensors before connecting.
Prevent pipe from catching tips of sealing tape when piping.

Piping

■ When connecting a commercially available fitting to the pressure port, attach a 12 mm wrench (14 mm for PPX-6G) to the hexagon section of the pressure port and install with a tightening torque of 9.8 N·m or less. A fitting or the pressure port section could break if too much torque is applied.
Use seal tape to connect fittings to prevent air leak.

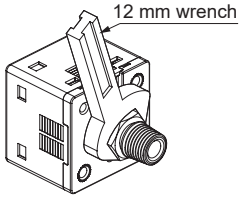

■ The piping port has been degreased and washed. Handle carefully when unpacking. (PPX-P12)

Installation

⚠ WARNING

■ Sensor mounting bracket PPX-KL is available.
If a sensor is installed with a mounting bracket, etc., tightening torque must be 0.5 N·m or less.

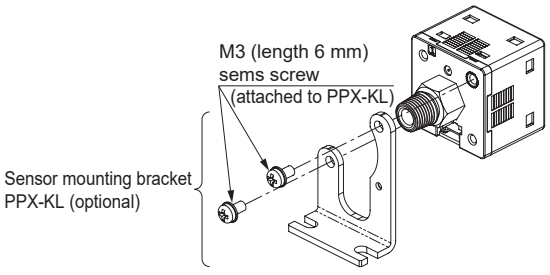

■ Panel mounting bracket PPX-KHS (optional) and front cover PPX-KCB (optional) are also available.

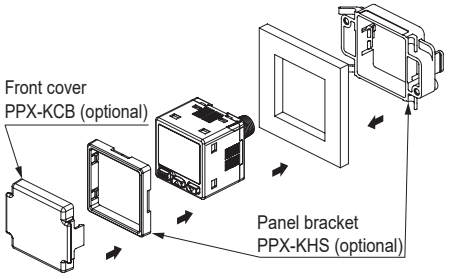

Mounting, installation and adjustment

⚠CAUTION

■Care must be taken to protect the body and lead wire.

- Check that stress is not directly applied to cable lead outs or connectors.

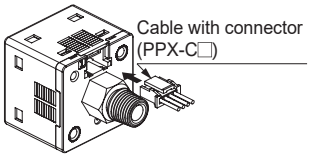

- Do not bump or drop the body, or apply excessive bending or tensile strength to the lead wire. This may lead to disconnection.
- Connect and wire bending-resistant material, such as robot wire material, for the movable sections.

■Connector wiring

- Connect by inserting the cable with connector PPX-C□ into the product connection connector as shown at right.
- To remove, press down on the fingers of the cable with a connector and pull out the connector.
- Do not pull on the cable without pressing down on fingers. The cable could break or the connector could be damaged.

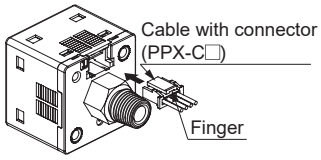

[Connector]
Contact: SPHD-001T-P0.5
Housing: PAP-04V-S
(manufactured by J.S.T. Mfg. Co., Ltd.)

[Connector pin layout drawing]

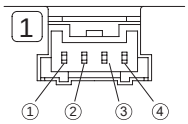

Connector pin No.	Terminal name
①	+V
②	Comparison output 1
③	Standard: Comparison output 2 High-function: Analog voltage/current output or external input
④	0 V

- When wiring with a connector set (PPX-CN), be sure to use a compatible cable and crimp tool specialized for housing and contacts.

[Conforming cable]

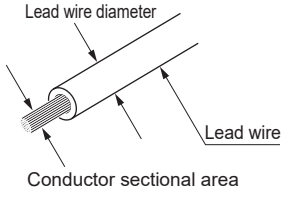

Conduct X-sect area	0.12 to 0.32 mm²(AWG26 to 22)
Lead wire diameter	ø1.0 to ø1.5 mm
Wire material	Annealed copper twisted wire

Housing	J.S.T. Mfg. Co., Ltd. PAP-04V-S
Contact	J.S.T. Mfg. Co., Ltd. SPHD-001T-P0.5
Recommended crimping tools	J.S.T. Mfg. Co., Ltd. YC-610R (AWG26 to 24)
	J.S.T. Mfg. Co., Ltd. YC-611R (AWG22)

■Wiring

- Turn power OFF before wiring this product. Discharge static electricity from personnel and tools before and during work.
- Use stabilized noise-free power with a ripple voltage of 10% or less for the power supply.

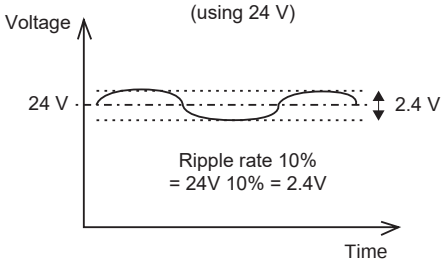

- Turn the power ON and OFF when voltage rises or falls quickly. If the rated voltage is not reached, the sensor could malfunction. In some cases, the sensor may not recover after the rated voltage is reached. Reset the power in that case. Even if the rated voltage drops temporarily, shut down the power once, then turn ON the power again.
- Avoid using in a transient state continuing 0.5 s after power is turned ON.
- Install this product and wiring as far away as possible from sources of noise such as power distribution wires. Take separate measures against surge generated from inductive loads that enters the power wire.
- Do not start the control unit, machinery and equipment immediately after wiring. Unpredictable signals could be output due to incorrectly set values. Conduct a power ON test with the control unit, machinery and equipment stopped, and set required switches.
- Do not turn the power OFF during or immediately after key operation setting.
- Cable extension is possible up to a length of 100 m using a cable with 0.3 mm² and over. However, when using this product as a CE conforming product, the power cable connected to this product must be less than 30 m long.

■Do not turn the power OFF during or immediately after key operation setting. The set value may not be updated.

■When using the unit change function

- If using export models (for outside Japan), when changing the units other than MPa or kPa, make sure to attach the unit seal enclosed and attached to the product to the unit indication section on the operation section.

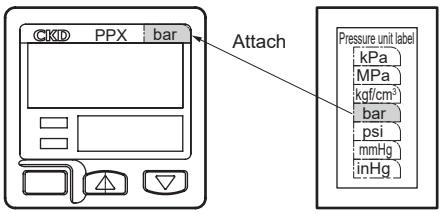

[Unit seal label]

Product-specific cautions: Electronic pressure switch and sensor PPD3 (-S)

Design/selection

⚠ CAUTION

■ This product self-diagnoses the internal circuit immediately after power is turned ON, so pressure is not detected immediately. Set the control circuit so signals are ignored for 2 seconds after power is turned ON.

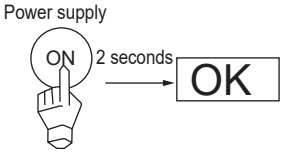

■ This product's overcurrent protection turns the output OFF when overcurrent is detected. However, the output is repeatedly turned ON for a short time at a set cycle. This causes power supply voltage to fluctuate and may adversely affect peripheral devices. We ask for your understanding in this matter.

■ When using this product for compressed air containing water or oil, use the PPD3-S (stainless steel diaphragm sensor specifications) with increased corrosion resistance.

[Analog output voltage waveform]

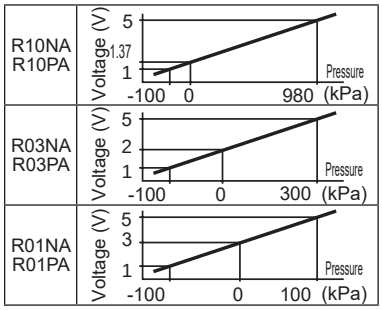

■ Install the PPD3-S on a frame or panel connected to the frame ground (F.G.) and, if necessary, directly connect from the PPD3-S port to the F.G. When leading fluids in from an external device, connect via a relay fitting connected to the F.G. (To provide safety when using conductive fluids)

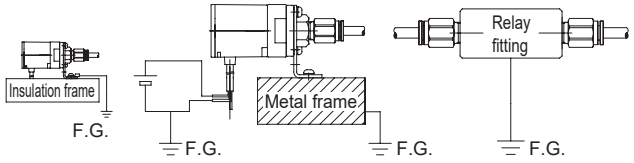

■ PPD3-S power supply is a DC stabilized power supply completely isolated from the AC primary side. Connect either the + side or - side of the power to the FG. A varistor (voltage limit approx. 40 V) is connected between the internal power circuit and port installation section of this PPD3-S to prevent dielectric breakdown of the sensor. Avoid withstand voltage and insulation resistance tests between the PPD3-S internal power supply circuit and port installation section. Disconnect PPD3-S wiring first if this testing is required. An excessive potential difference between the PPD3-S power supply and port installation section could burn internal parts.
After installing, connecting and wiring the PPD3-S, electrical welding of the device/frame, short-circuit accidents, etc., could cause welding current, excessively high voltage caused by welding, or surge voltage, etc., to run through the wiring, ground wire, or fluid path connected between the above devices, damaging wires or devices. Conduct any work such as electrical welding after removing this device and disconnecting all electric wires connected to the F.G.

■ Care must be taken for entry of water and drainage.
The PPD3-S has a stainless steel diaphragm pressure sensor that cannot be damaged by water. However, when the vacuum bursts after checking the vacuum suction, drainage including water and air could collide with the pressure sensor. The water's inertia could damage the pressure sensor and prevent the correct pressure from being indicated.
If water or drainage can enter, connect a thin pipe to the PPD3, or install an orifice midway. Take special care when using the back ports on the PPD3-S 6B port. In addition, this type has a ø1 built-in orifice inside the pressure port.

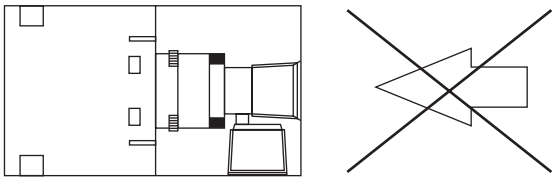

Take special care when using the back ports of the 6B if water or drainage could enter.

Mounting, installation and adjustment

⚠CAUTION

■Check the pressure range.
If the pressure switch for low pressure range is incorrectly used for high pressure applications, this product could be ruptured or damaged, and a large amount of air could leak, creating a hazard.

High pressure	P10>P01>V01 R10>R03>R01	Vacuum

■Switch data can be set to values that exceed the rating range, or to unrealistic values, but operation and accuracy at such values are not guaranteed. Confirm that settings enable the target operation. Ensure the following difference between data A and B to stabilize operation:

Operation mode	Difference of min. digit
Hysteresis operation	1% F.S.
Window operation	3% F.S.

Do not set as follows: {Data A = Data B / ON point = OFF point}

■Avoid air blow.
The high pressure near the nozzle could back flow and exceed the product proof pressure. This could result in rupture or damage. Lower the pressure of compressed air to less than the proof pressure, or shield the flow path when blowing air.

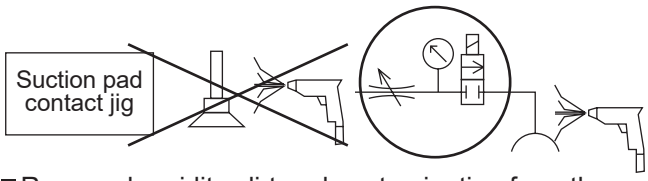

■Remove humidity, dirt and contamination from the installation location. Select a flat installation surface. Any warping or bumps on the installation surface could damage the case or compromise protective functions. Excessive tightening of installation screws can result in similar damage.
- After installation, do not bump the case or use the case as a step. Even if there is no apparent external damage, this remains as a stress that will gradually form cracks and further damage.

■Precautions for PPD3 (sensor integrated) Series
- The product may be prone to damage when in a state of being unpacked or being installed. The protective functions are effective when the product is correctly installed, wired and piped. Provide protection so that water and other substances do not come in contact until installation is completed.
- Wire and pipe the product after fixing it at the installation site. Check surrounding safety and that water and other substances do not come in contact before starting wiring. Continue to provide protection after the product is connected. (The current could leak at the connection section, and water could run along the cable and enter the case.)
- The atmospheric introduction port for atmospheric pressure is treated as a key point in ensuring this product's protective performance. Use the following tube, and release the end into the atmosphere in a dry environment with no barometric pressure differences.
  Recommended tube: Soft nylon tube Model No. FH-3224
  Urethane tube Model No. U-9532, U-9504
  [IMPORTANT] Never apply pressure to the atmosphere inlet port!

■If the inlet port for the atmosphere introduction port pressure is pressurized, protective performance could be lost, and the case could rupture or pop off. Set as atmospheric pressure. Leave this port set at atmospheric pressure. Separate piping for atmospheric release port from other pressurized air piping by using different tube diameters or colors. Take sufficient countermeasures to prevent pressurized air from being applied.
- Even when protective performance is not required, if this product is installed in a humid environment with large temperature variations, condensation in the case is prevented by taking these measures. (Condensation is fatal to the electric circuits.)
- If this product is in a control panel, pressurized to a positive pressure or negative pressure within a dry environment, the pressure difference could affect display accuracy. Please be careful.
- This product is intended to protect city water. Protection performance cannot be guaranteed for hot water, oil, coolant (non-water soluble/water soluble), solvents, acids, alkalines, or chemicals, etc. These substances could cause solvent cracks to form on in the case's resin parts, the gasket to swell, the adhesive to melt and separate, and other problems. Note that if water that gets on the product freezes, the case could be damaged and protective performance could be lost. Please be careful.

■The sensor-separated display section and sensor section are adjusted as a set. The pressure value could deviate more than accuracy if parts from different lot numbers are used together.

■The main body and fitting connection of PPD3-R□D rotate, but this section should not repeatedly rotate during use.

■The degree of protection is equivalent to IP65, but this product must not be used in an environment where it could come in contact with water. Check that coolant does not come in contact.

Use/maintenance

⚠ CAUTION

■ This product has O-ring seals and threaded fittings. A slight amount of air leakage (1 cm^3/min. ANR or less) is tolerated.
When using applicable fluid other than air; nitrogen gas, etc., oxygen deficiency could be caused. Observe the following instructions.
- Use in well-ventilated locations.
- Ventilate the work area when nitrogen gas is being used.
- Inspect nitrogen gas piping regularly to avoid leaks.

■ Fluids that could corrode the gas contact section materials (*1) or flammable, explosive, or toxic fluids could damage the sensor or body.

■ Confirm that fluid being measured does not freeze (resulting in expansion or contraction of volume), contents do not solidify and stick due to drying, solid contents do not form sediments or accumulate, accumulated fluid does not decompose and that the product is not clogged by dirt. When using inductive fluids, if fluid stays in the middle of the piping at low pressure ranges, negative pressure is generated, preventing proper measurement. Fluids such as water or oil drainage could result in a water hammer caused by the fluid's inertial pressure, or a sudden pressure rise such as a surge pressure when the valve is turned ON and OFF, etc. Before installing, use a highly responsive pressure sensor and check that these do not exceed the proof pressure even for a moment. Pressure exceeding the proof pressure could damage the sensor or body.

■ For safety, be sure to turn the power OFF before connecting the sensor separated sensor.

*1 Wetted section materials

Model	Material
PPD3-S	SUS 630, FKM, aluminum

Note: The fitting material is included for models with push-in fittings (PPD3-S-6HD, PPD3-S-6HT).

Fitting	NBR, copper alloy (nickeling)

Air sensor

Overview

The air sensor consists of a sensor nozzle and an air-electricity (air-air) converter. In principle, the detection air is blown onto the workpiece and the generated back pressure is converted to an electrical signal by the air-electricity converter.
The sensor nozzle can be located anywhere, enabling compact system design.

Features

(1) Compact/sensitive
All models are compact size. Space saving, high precision and quick response.

(2) For all objects
Non-contact detection does not damage the detection target and enables almost any solid object to be detected.

(3) A great variety of applications
For presence confirmation, position/dimension confirmation, counting, level check, pressure control, etc.

(4) Air sensor with stable detection

CONTENTS

Air sensor category and usage 1232

Contact/close contact/cutting tool breakage detection switch 1235

Contact confirmation switch (digital gap switch) 1236
GPS3 Series

Contact confirmation switch (gap switch) 1260
GPS2 Series

Close contact confirmation switch 1274
HPS Series

Cutting tool breakage detection switch 1288
TLPS Series

Air sensor (PEL systems) 1317

Switching element 1318
APA1 Series

Detection nozzle 1321
BA/DA10/DA20/VS/GA Series

PL switch 1324

SEPEL switch 1330
DPS Series

Air sensor (Related products)

Filter 1332

Piping instrument 1333

Air sensor category and usage

The air sensor consists of a detection nozzle and an air-electricity converter (air-air converter). In principle, the detection air is blown onto the workpiece and the generated back pressure is converted to an electrical signal by the air-electricity converter. The detection nozzle is the air blow-off port. A compact sensor can be manufactured since the nozzle is formed with hole machining.
Various air sensors are available to match your application.

Air sensor category

Series	Detection	Detection mechanism output method	Nozzle	Major applications	Page
Contact confirmation switch (digital gap switch) GPS3 Series	Pressure detection	Pressure sensor	ø1.5 Standard	Contact confirmation of 0.02 to 0.4 mm	1236
Contact confirmation switch (gap switch) GPS2 Series	Bridge detection	Diaphragm + proximity switch Proximity (NPN, PNP)	ø1.5 Standard	Contact confirmation of 0.03 to 0.4 mm	1260
Close contact confirmation switch HPS Series	Bridge detection	Diaphragm + proximity switch Proximity (NPN, PNP)	ø1.5 Standard (ø1 to ø2) back pressure nozzle	Contact confirmation of 0.01 to 0.7 mm Close contact confirmation of tool changer Enhancement of detection distance (3 mm)	1274
Cutting tool breakage detection switch TLPS Series	Bridge detection	Diaphragm + proximity switch Proximity (NPN, PNP)	Detecting nozzle	Drill tip breakage detection (ø0.3 to ø30)	1288
PEL switch APA1 Series	Bridge detection Gauge detection	Float + reed switch Reed	Various (for positive pressure)	Dimension identification and workpiece confirmation, etc. (General purpose applications)	1318
SEPEL switch DPS Series	Bridge detection Gauge detection	Pressure sensors Proximity (NPN)	ø0.15 to ø2 (Suction confirmation)	Suction confirmation	1330

● Detection

Pressure detection

Pressure sensors around orifices are used to convert to gap values (reference values) for output.

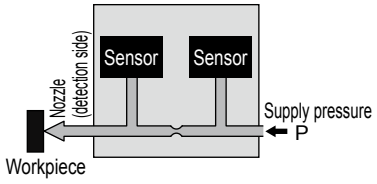

Gauge pressure detection

With this detection, the sensor reads whether detected pressure is higher or lower than atmospheric pressure.

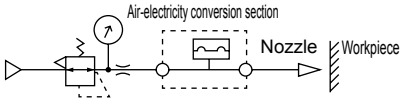

Bridge detection

With this method, the supply air is branched into two circuits, each provided with a sensor nozzle. The difference between the back pressures of the nozzles is compared, and even if the supply pressure fluctuates, the relative magnitude of the back pressures does not change. This is extremely stable detection.

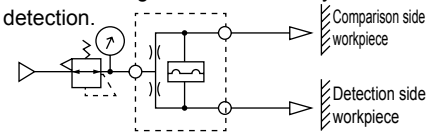

Using the contact confirmation switch GPS3/GPS2 Series and close contact confirmation switch HPS Series

Model	Model No.	Detection distance (mm)	Features
		0.01 0.02 0.03 0.05 0.20 0.25 0.30 0.40 0.70 3.0	
Contact confirmation switch (digital gap switch)	GPS3-E	0.02 to 0.15	· Digital display · High precision 2-point output · High maintainability · IO-Link communication compatible (option)
	GPS3	0.03 to 0.40	
Contact confirmation switch (gap switch)	GPS2-05	0.03 to 0.25	·Push-in adjustment by dial (Stepped setting) (Master gauge not required)
	GPS2-07	0.03 to 0.40	
Close contact confirmation switch	HPS-05	0.01 to 0.20	· Variable adjustment by precise needle · Enlarged detection distance when used with back pressure nozzle
	HPS-07	0.02 to 0.30	
	HPS-10	0.05 to 0.70	
	HPS-05+ Back pressure nozzle	0.10 to 3.0	

Contact/close contact confirmation switch/ cutting tool breakage detection switch

GPS3/GPS2/HPS/TLPS

■ **Pressure sensor/air sensor**

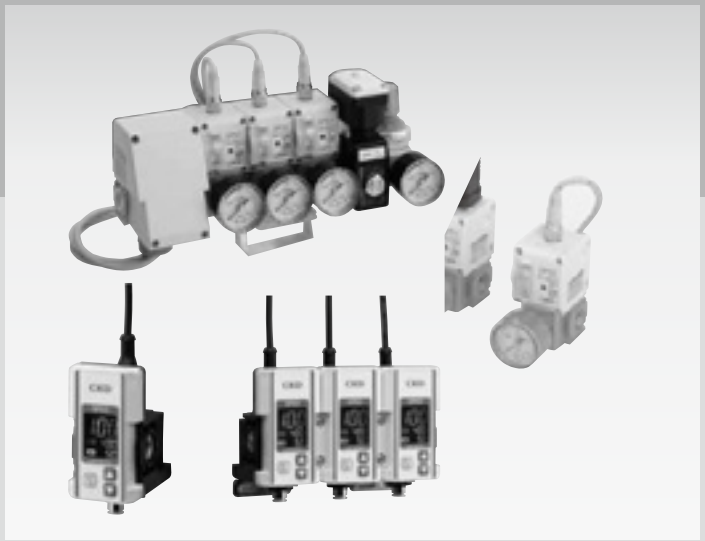

CONTENTS

Using the contact confirmation switch and close contact confirmation switch 1233

Contact confirmation switch (digital gap switch)

Product introduction 1236
● Single unit (GPS3) 1240
● Manifold (MGPS3) 1242
● Unit (UGPS3) 1243
Technical data 1244
Peripheral devices 1248
Operation mode 1250
⚠ Safety precautions 1256

Contact confirmation switch (gap switch)

Product introduction 1260
● Single unit (GPS2) 1261
● Manifold (MGPS2) 1266
● Unit (UGPS2) 1270

Close contact confirmation switch

Product introduction and application examples 1274
● Single unit (HPS) 1276
● Manifold (MHPS) 1280
● Unit (UHPS) 1284

Cutting tool breakage detection switch

Product introduction 1288
● Single unit (TLPS) 1290
● Manifold (MTLPS) 1294
● Unit (UTLPS) 1298
GPS2/HPS/TLPS common options 1302
GPS2/HPS/TLPS peripheral components 1304
GPS2/HPS/TLPS common technical data 1308
⚠ GPS2/HPS/TLPS safety precautions 1312

Wide-range gap switch with digital display for even easier use!

Blockage indicator lamp

Output display 1

Output display 2

Output display color can be selected.

OFF: Green ON: Orange *2

or

OFF: Orange ON: Green

*2: Default settings.

Key lock function and

PIN number function also built in.

Operation button

Focus on creating a simpler layout which makes operation easier to picture.



Ref. value *1

*1: The distance between the detection side nozzle and workpiece is a numerical conversion value, and units do not apply.

Threshold 1

Threshold 2

Pressure display

The threshold display can be switched to the detection side pressure display by pressing the ▲ ▼ keys.

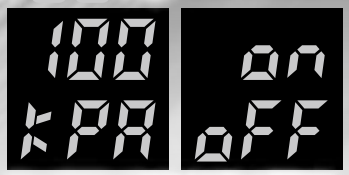

When IO-Link option is selected, switching to seating ON/OFF display is also possible.

Screen non-display settings selection possible *3

The reference value and threshold can be set to OFF at shipping.

*3: When screen non-display option is selected.

Digital gap switch

GPS3 SERIES

Introducing the IO-Link model

IO-Link

IO-Link is a digital communication standard for sensors/actuators at factory sites. (IEC 61131-9)
Unlike analog communication, it enables the transmission of parameters and event data.

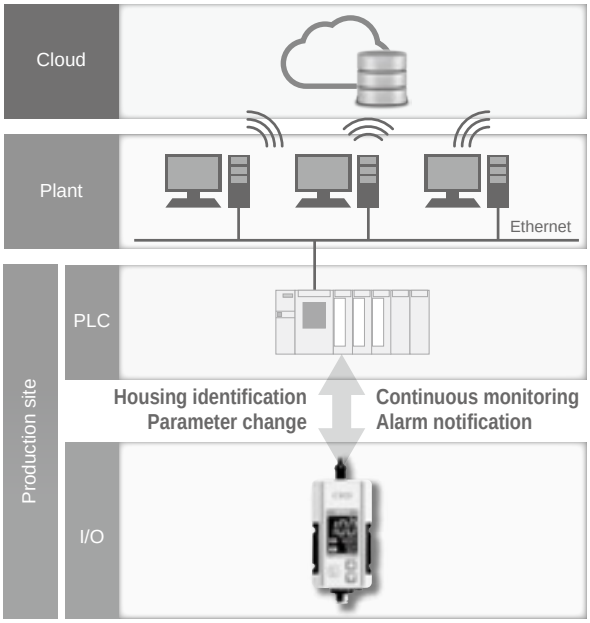

Features of IO-Link



Constant monitoring via digital data is possible.



Installation anywhere is possible, as parameters can be configured and changed remotely via the network.



Model Nos., serial Nos., etc., can be confirmed on the network.



The settings can be copied from the master (scanner), making parameter reconfiguration after maintenance obsolete.



Device failure and disconnection can be confirmed.



It can also be converted to Ethernet networks and connected, enabling devices to be IoT-ready.

High precision 2-point output

Industry's first!! PAT.P

February 2016, CKD research

Threshold can be set to 2 points within the detection range scale. For example, a single device can be used to confirm precise contact after clamping the workpiece and to detect rough contact while confirming orientation.

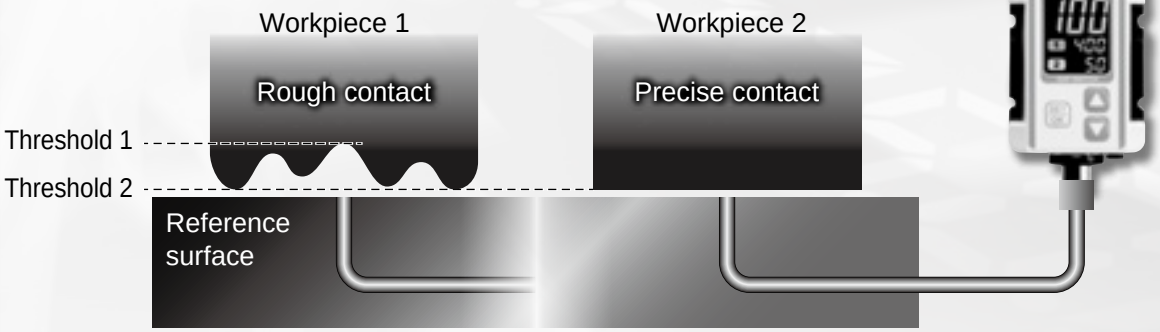

Detection over a wide range from raw material surfaces through precision machined surfaces

Industry number one! Wide range

Wide range February 2016, CKD research

This single unit allows finished surface roughness and material surface roughness settings within the detection range scale from 0.03 mm to 0.4 mm. A new short-range type has also been added to detect shorter distances. (Detection range scale: 0.02 mm to 0.15 mm)

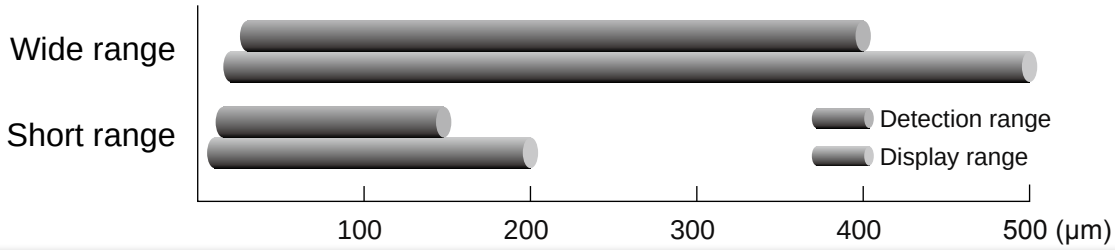

High maintainability (preventative maintenance)

[Blockage indicator function]

A lamp blinks and a signal is output *4 to indicate a blockage in the detection air flow path.
The blinking period indicates which locations are likely to be blocked, enabling rapid recovery.
(Default setting is OFF)



Fast blinking: Interior orifice may be clogged
Slow blinking*5: Detection nozzle may be clogged

[Orifice easy disassembly]

Orifice blockages can be cleaned without having to disassemble the assembled product.



Reset the threshold after disassembly or cleaning.

[Direct blow]

Capable of direct blow of max. 0.6 MPa.

*4: When IO-Link option is selected. *5: When the light is blinking without a workpiece present (Blinking also occurs during regular contact, due to the detection structure).

Easy operation

The master gauge you have at hand can be used to set the threshold easily.

With 100 µm master gauge



The reference value displayed on the master gauge at hand can be used to set the threshold with 1 operation.

Displayed values can be calibrated (actual measurement calibration function).

With 100 µm master gauge

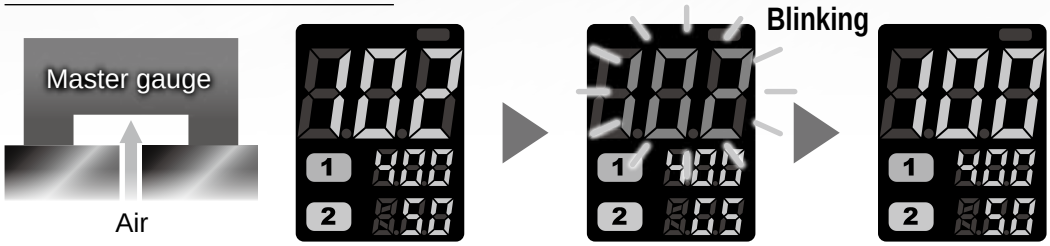

Now with a function allowing calibration of discrepancies in the reference value displayed on the master gauge at hand.

(Refer to Operation mode for details)

Low noise/energy-saving

Energy saving

Zero air exhaust!

Rethinking the detection circuit has eliminated exhaust air on the comparison side.
Exhaust noise, previously constant, is no longer a concern.
Air consumption when the nozzle is open can also be reduced.
Air consumption 9 L/min or less*.

* Short range

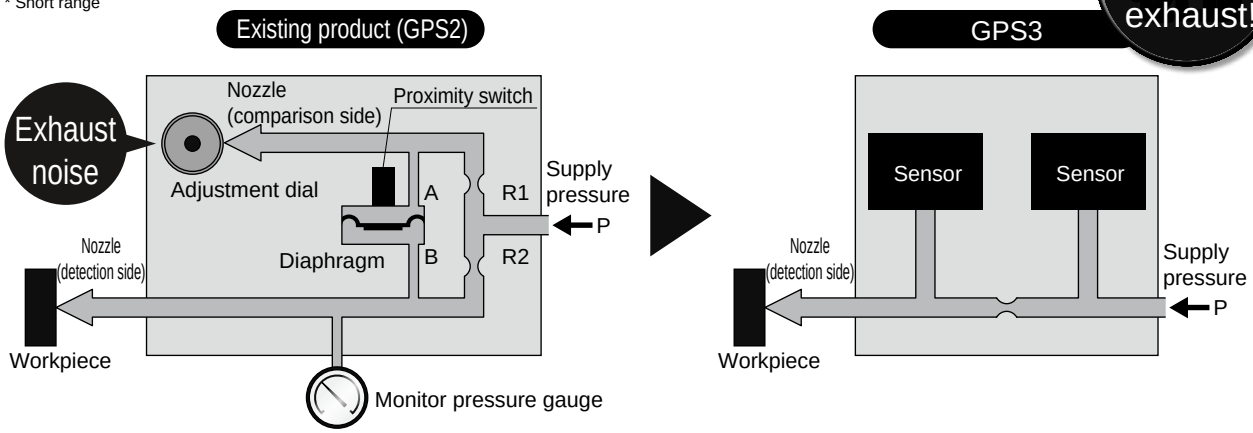

Excellent workability

Compact design

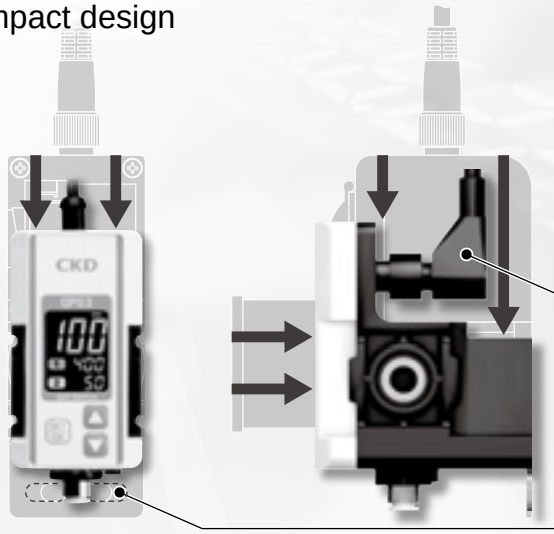

The appearance lives up to high-design equipment.
While the assembled dimensions are compatible with the conventional GPS2 product, the design is more compact, the weight reduced, and replacement is easy.

M12 connector (4-pin)

The connections are at the rear, so no space is required for connections on the front.

Mounting compatible

Manifold/unit supported. Easily expandable.

Manifold MGPS3



Unit UGPS3



Applications

Two-point detection for rough and precise contact.

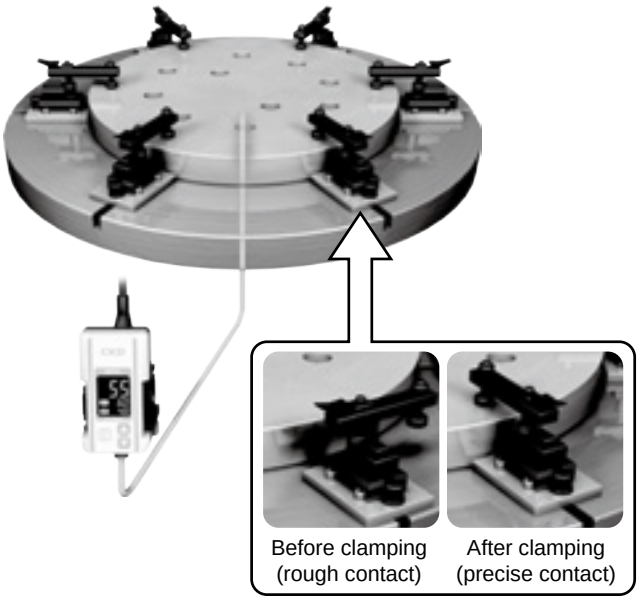

Before clamping (rough contact)

After clamping (precise contact)

Two-point detection for rough and finish machining.

Rough machining

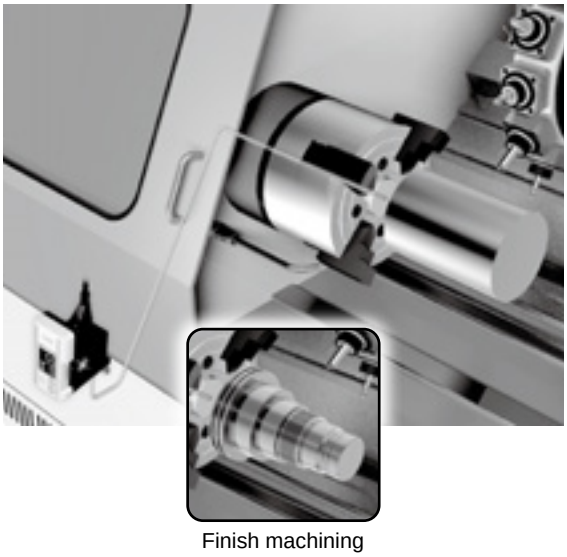

Finish machining

*Detection nozzle can be used in any environment



Contact confirmation switch (digital gap switch) single unit

GPS3 Series

● Port size: Rc1/8

Specifications

1 MPa ≈ 145.0 psi, 1 MPa = 10 bar

Item		Short range GPS3-E	Wide range GPS3
Working fluid		Compressed clean air (after 5 μm filter, lubrication not possible)	
Working pressure	kPa	50 (≈8 psi, 1 bar) to 200 (≈29 psi, 2 bar)	
Proof pressure	kPa	600 (≈87 psi, 6 bar)	
Detection range	mm	0.02 to 0.15	0.03 to 0.4
Reference value display range		10 to 200 (display unit 1)	20 to 500 (display unit 1)
Repeatability	mm	±0.01	±0.01 (detection range min to 0.1)
Hysteresis		Variable (reference value variable from 1 in increments of 1. Default 10)	
Temperature characteristics (base temperature +25°C)		0.015	0.030 mm or less (detection distance min to 0.3 mm) 0.1 mm or less (detection distance 0.3 to 0.4 mm)
Detection nozzle		Single hole nozzle ø1.5	
Power supply voltage	V	24 DC ±10% (18 to 30 DC) *1, ripple P-P 10% or less (with reverse connection protection)	
Current consumption	mA	25 or less (35 or less) *1	
Output/communication supported		2-point output (NPN, PNP open collector) *2	
Output rating		30 VDC, 100 mA or less	
Internal voltage drop	V	2 or less (using 100 mA)	
Short circuit protection circuit	*3	Equipped	
Display		Reference value, thresholds (2-point), output status indicators (2-point), detection side pressure, blockage indication	
Insulation resistance		No failure after 1 minute of 1,000 VAC application	
Withstand voltage		10 MΩ and over at 500 VDC megger	
Ambient temperature	°C	0 (32°F) to 50 (122°F) (no freezing or condensation)	
Degree of protection		IP67 or equivalent	
Port size		Supply port: Rc1/8, detection port: push-in fitting ø6	
Wiring	*4	M12 connector, 4-pin	
Weight	g	128 (excluding cable)	
Air consumption	L/min	Less than 9	Less than 22

*1: Values in ( ) are when communication support option L is selected
*2: Refer to page 1255 for communication specifications.
*3: This product's protection circuit is effective only for specific misconnections and load short-circuits. It does not provide protection for all misconnections.
*4: Tighten M12 connectors at 0.5 N·m torque or less.

How to order

GPS3 - E N - ○ - T J B - ○

- A Detection range
- B Output format/communication supported
- C Port size (supply side)
- D Screen display
- E Connector cable
- F Bracket
- G Pressure display unit

Code	Description
A Detection range	
Blank	0.03 to 0.4
E	0.02 to 0.15
B Output format/communication supported	
N	NPN open collector (2-point)
P	PNP open collector (2-point)
L	IO-Link communication
C Port size (supply side)	
Blank	Rc1/8
D Screen display	*1
Blank	Display (default)
T	Non-display (default)
E Connector cable	
Blank	5 m connector cable included (one side elbow)
D	5 m connector cable included (both sides elbows/straight)
J	Without connector cable
F Bracket	
Blank	Without bracket
B	With bracket
G Pressure display unit	*2
Blank	SI units only (domestic model)
KA	With unit switching function (export model)

Precautions for model No. selection

*1: OS mode allows configuration of screen display and non-display settings.
*2: In compliance with the new Measurement Act, export models (with unit switching function "KA") cannot be used in Japan.

Dimensions

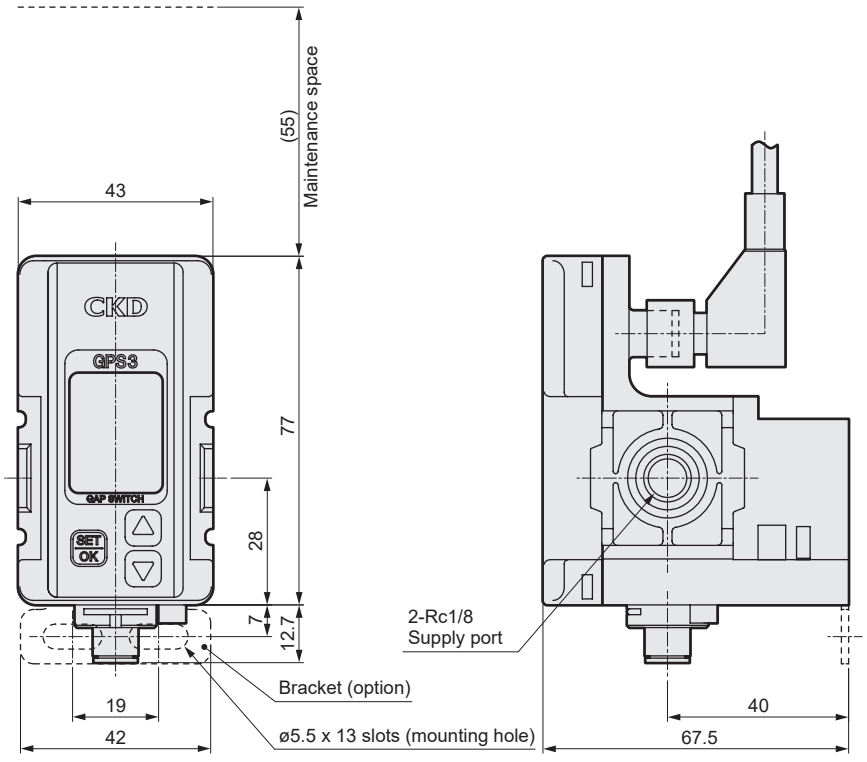

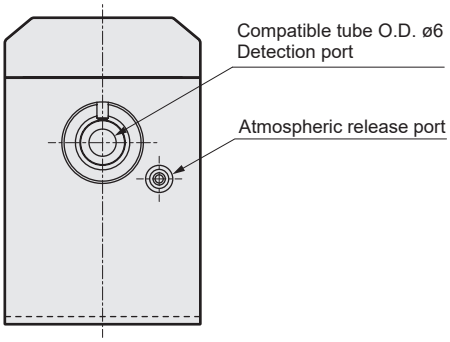

Connector pin array (body side)

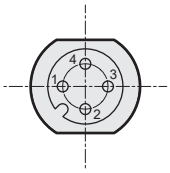

Pin No.	Lead wire color	Applications
1	Brown	Power supply +
2	White	Output 2
3	Blue	Power supply -
4	Black	Output 1 (C/Q*1)

*1: For IO-Link compatible options

(Atmospheric release port)
When in use, if this port may become obstructed by coolant or oil, etc., connect a tube (O.D. ø4, I.D. ø2.5) and move the tube opening to a location that will not become obstructed.



Gap switch Manifold

MGPS3 Series

● Station No.: 2 to 6 stations

Specifications

Basic specifications are the same as the single units on page 1240.

How to order

MGPS3 - 2 E N - ○ - T J B - ○

- Ⓐ Station No.
- Ⓑ Detection range
- Ⓒ Output format/communication supported
- Ⓓ Port size (supply side)
- Ⓔ Screen display
- Ⓕ Connector cable
- Ⓖ Bracket
- Ⓗ Pressure display Unit

Code	Description
Ⓐ Station No.	
2	2 stations
3	3 stations
4	4 stations
5	5 stations
6	6 stations
Ⓑ Detection range	
Blank	0.03 to 0.4
E	0.02 to 0.15
Ⓒ Output format/communication supported	
N	NPN open collector (2-point)
P	PNP open collector (2-point)
L	IO-Link communication
Ⓓ Port size (supply side)	
Blank	Rc1/8
Ⓔ Screen display *1	
Blank	Display (default)
T	Non-display (default)
Ⓕ Connector cable	
Blank	5 m connector cable included (one side elbow)
D	5 m connector cable included (both sides elbows/straight)
J	Without connector cable
Ⓖ Bracket	
Blank	Without bracket
B	With bracket
Ⓗ Pressure display unit *2	
Blank	SI units only (domestic model)
KA	With unit switching function (export model)

Precautions for model No. selection

*1:OS mode allows configuration of screen display and non-display settings.

*2:In compliance with the new Measurement Act, export models (with unit switching function "KA") cannot be used in Japan.

Dimensions

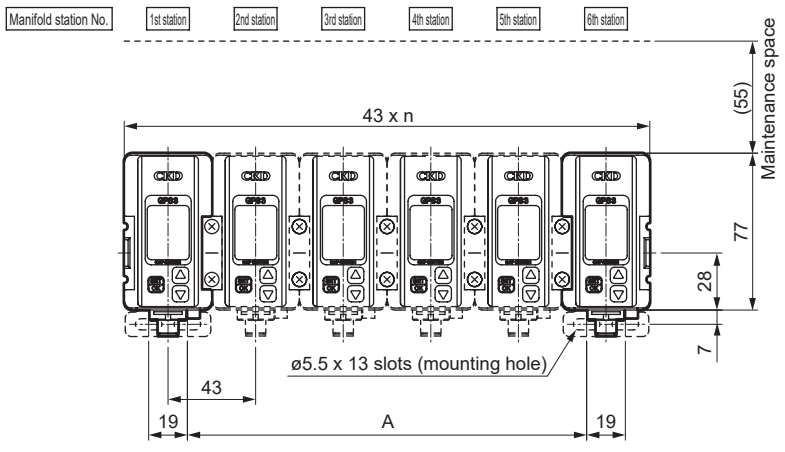

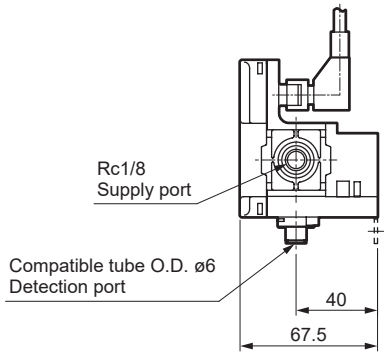

	Station No. n				
	2	3	4	5	6
Dimension A	24	67	110	153	196



Gap switch Unit

UGPS3 Series

● Solenoid valve with needle, regulator integrated general purpose unit

Specifications

Basic specifications are the same as the single units on page 1240.

How to order

UGPS3 - 2 E N R - ○ - T J - ○

Code	Description
Ⓐ Station No.	
1	1 station
2	2 stations
3	3 stations
4	4 stations
5	5 stations
6	6 stations
Ⓑ Detection range	
Blank	0.03 to 0.4
E	0.02 to 0.15
Ⓒ Output format/communication supported	
N	NPN open collector (2-point)
P	PNP open collector (2-point)
L	IO-Link communication
Ⓓ Regulator/solenoid valve assembly position *1	
R	Right-side assembly (supply port on right)
L	Left-side assembly (supply port on left)
Ⓔ Port size (supply side) *2	
Blank	Rc1/4
Ⓕ Screen display *3	
Blank	Display (default)
T	Non-display (default)
Ⓖ Connector cable	
Blank	5 m connector cable included (one side elbow)
D	5 m connector cable included (both sides elbows/straight)
J	Without connector cable
Ⓗ Pressure display unit *4	
Blank	SI units only (domestic model)
KA	With unit switching function (export model)

Ⓐ Station No.
Ⓑ Detection range
Ⓒ Output format/communication supported
Ⓓ Regulator/solenoid valve assembly position
Ⓔ Port size (supply side)
Ⓕ Screen display
Ⓖ Connector cable
Ⓗ Pressure display unit

Precautions for model No. selection

*1: The assembly uses R1000 regulator for low pressure and GPS2-AB3X-2H-FL-DC24V solenoid valve with needle. Left or right assembly position depends on whether the GPS3 display is on the left or right.
*2: Port size for regulator and solenoid valve with needle. (The port size for single GPS3 units is Rc1/8)
*3: OS mode allows configuration of screen display and non-display settings.
*4: In compliance with the new Measurement Act, export models (with unit switching function "KA") cannot be used in Japan.

Dimensions

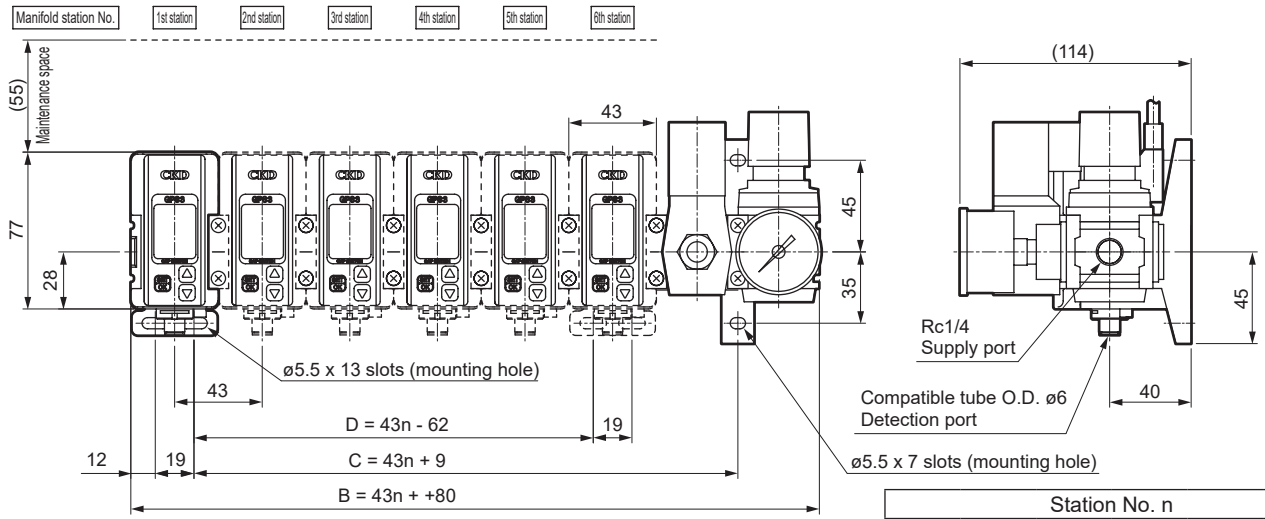

	Station No. n					
	1	2	3	4	5	6
Dimension B	123	166	209	252	295	338
Dimension C	52	95	138	181	224	267
Dimension D	–	–	67	110	153	196
Bracket set	1	1	2	2	2	2

Characteristics data (short range)

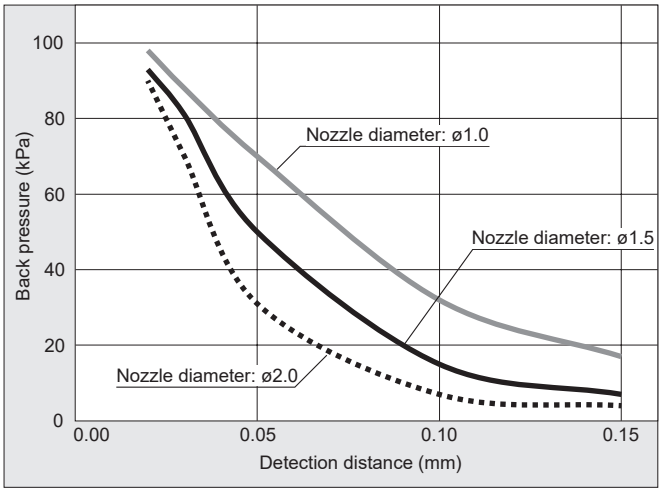

● Back pressure characteristic 1 - Differences in back pressure change due to detection nozzle diameter

· Type: GPS3-E · Bore size: ø6 x ø4 · Pipe length: 5 m
· Supply pressure: 100 kPa

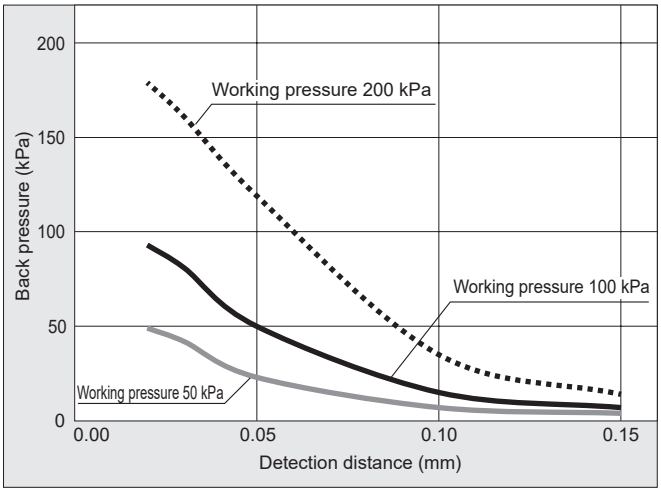

Back pressure characteristic 2 - Differences in back pressure change due to working pressure

· Type: GPS3-E · Bore size: ø6 x ø4 · Pipe length: 5 m
· Nozzle diameter: ø1.5 (flat tip)

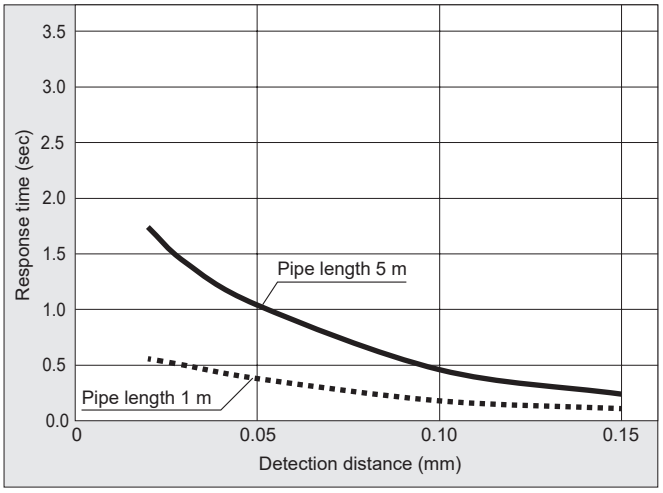

● Effect of pipe length on response time (OFF → ON)

· Type: GPS3-E · Bore size: ø6 x ø4
· Supply pressure: 100 kPa · Nozzle diameter: ø1.5 (flat tip)

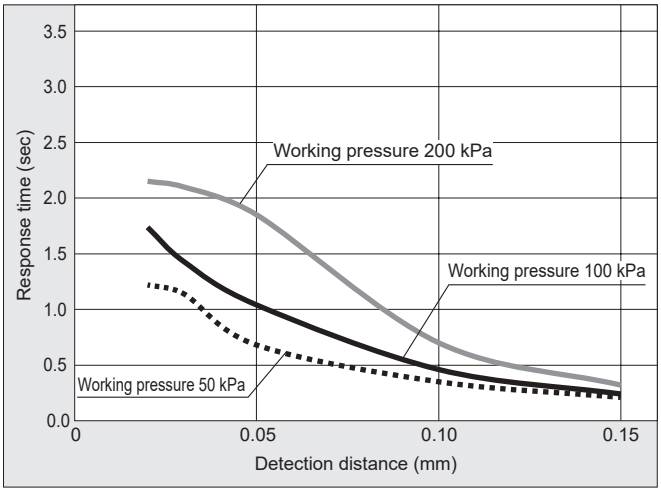

● Effect of working pressure on response time (OFF → ON)

· Type: GPS3-E · Bore size: ø6 x ø4 · Pipe length: 5 m
· Nozzle diameter: ø1.5 (flat tip)

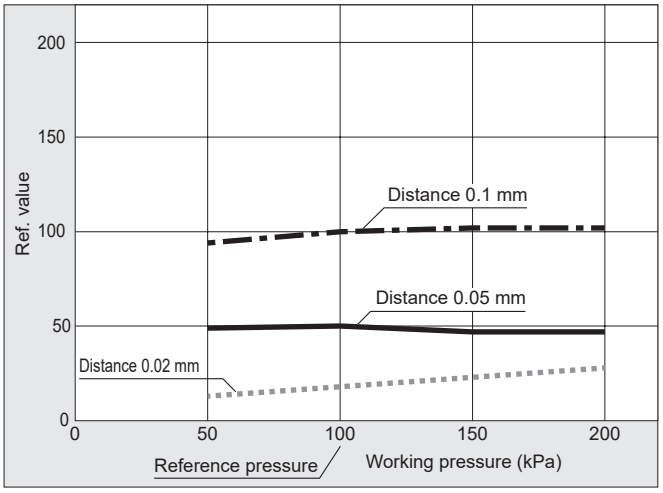

●Effect of working pressure change on reference value

· Type: GPS3-E · Bore size: ø6 x ø4 · Pipe length: 5 m
· Nozzle diameter: ø1.5 (flat tip)

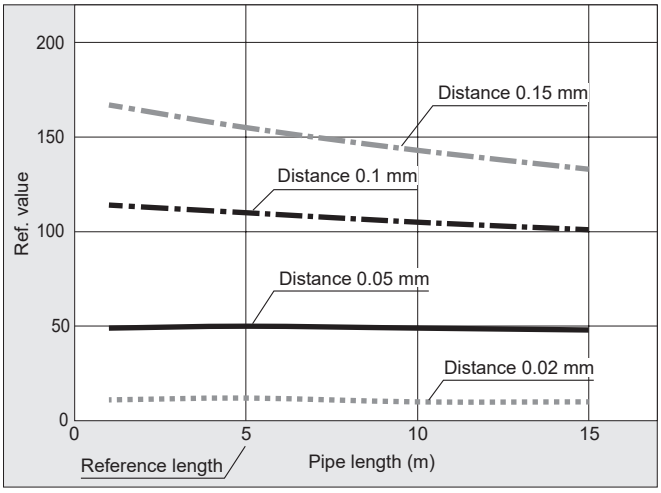

● Effect of pipe length change on reference value

· Type: GPS3-E · Bore size: ø6 x ø4 · Reference pipe length: 5 m
· Supply pressure: 100 kPa · Nozzle diameter: ø1.5 (flat tip)

Characteristics data (wide range)

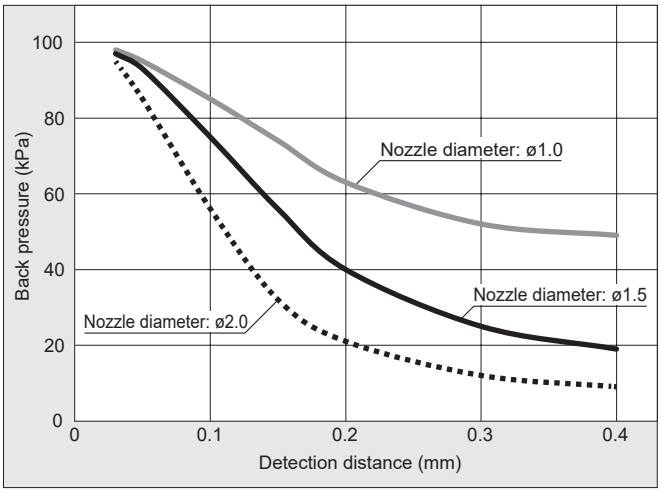

● Back pressure characteristic 1 - Differences in back pressure change due to detection nozzle diameter

· Type: GPS3 · Bore size: ø6 x ø4 · Pipe length: 5 m
· Supply pressure: 100 kPa

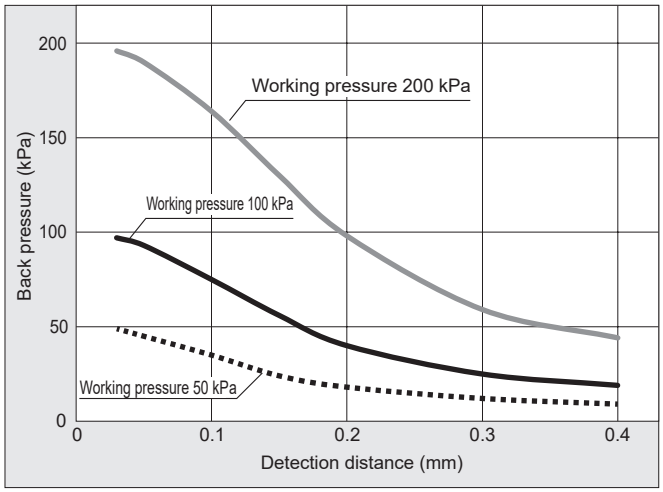

Back pressure characteristic 2 - Differences in back pressure change due to working pressure

· Type: GPS3 · Bore size: ø6 x ø4 · Pipe length: 5 m
· Nozzle diameter: ø1.5 (flat tip)

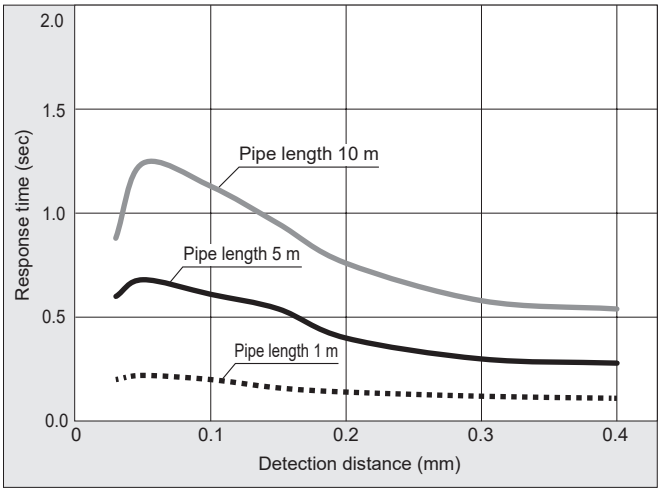

● Effect of pipe length on response time (OFF → ON)

· Type: GPS3 · Bore size: ø6 x ø4 · Supply pressure: 100 kPa
· Nozzle diameter: ø1.5 (flat tip)
(response time is measured at 80% distance of threshold)

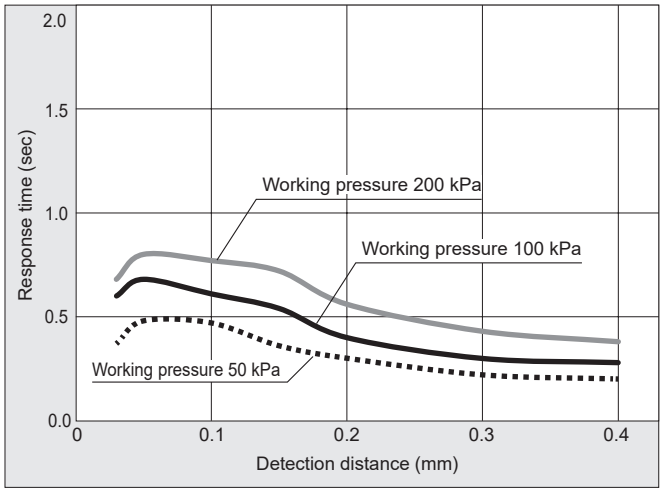

● Effect of working pressure on response time (OFF → ON)

· Type: GPS3 · Bore size: ø6 x ø4 · Pipe length: 5 m
· Nozzle diameter: ø1.5 (flat tip)
(response time is measured at 80% distance of threshold)

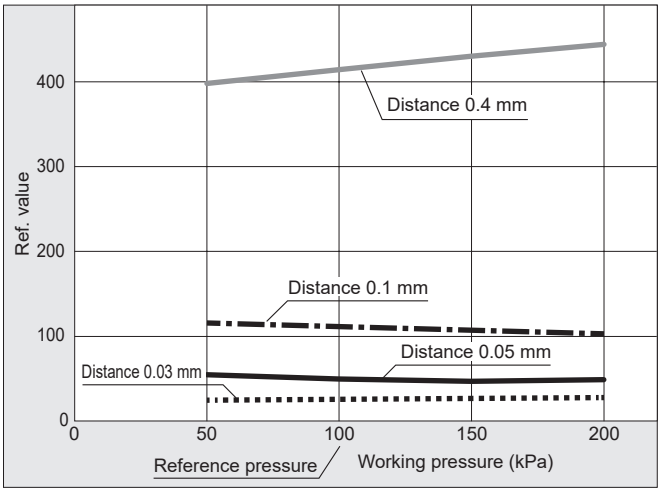

● Effect of working pressure change on reference value

· Type: GPS3 · Bore size: ø6 x ø4 · Pipe length: 5 m
· Nozzle diameter: ø1.5 (flat tip)

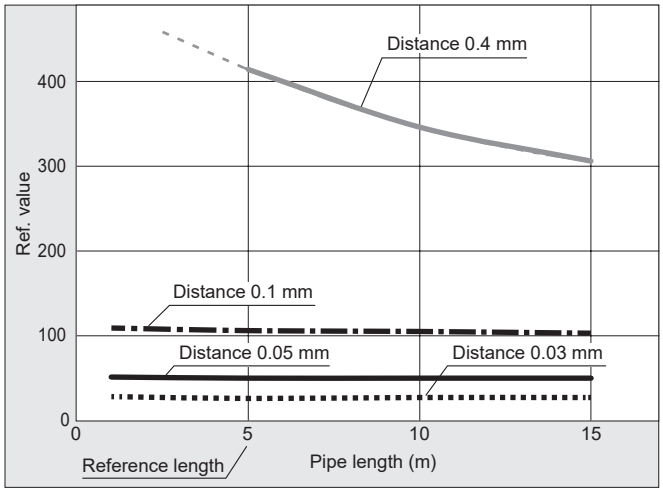

● Effect of pipe length change on reference value

· Type: GPS3 · Bore size: ø6 x ø4 · Reference pipe length: 5 m
· Supply pressure: 100 kPa · Nozzle diameter: ø1.5 (flat tip)

Characteristics data

● Short range

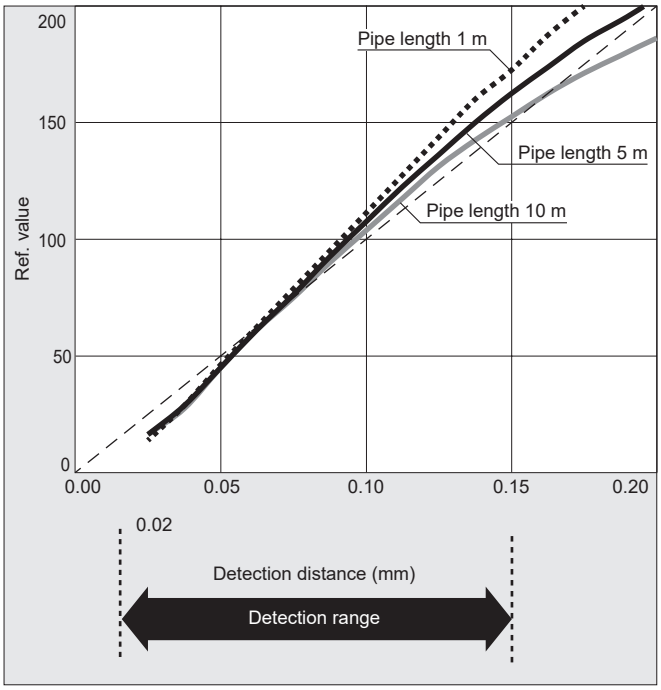

● Relationship between detection distance and reference value

· Type: GPS3-E · Bore size: ø6 x ø4
· Supply pressure: 100 kPa · Nozzle diameter: ø1.5 (flat tip)

● Wide range

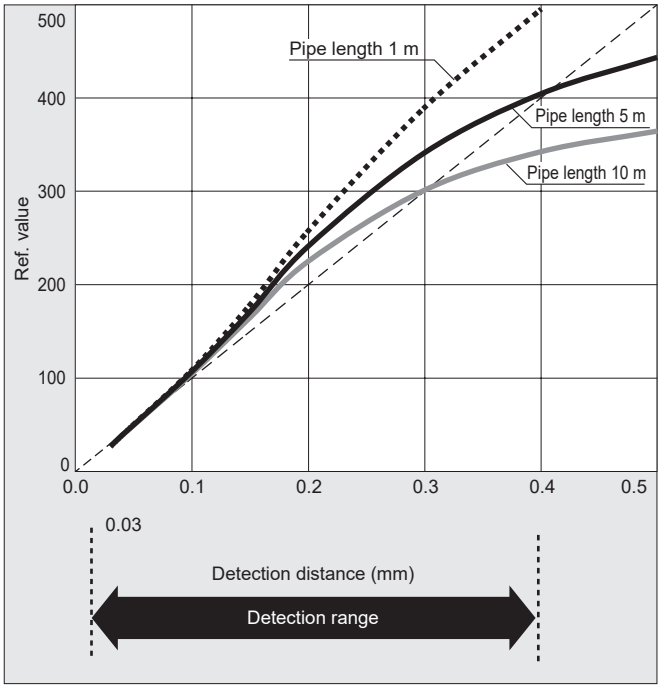

● Relationship between detection distance and reference value

· Type: GPS3 · Bore size: ø6 x ø4
· Supply pressure: 100 kPa · Nozzle diameter: ø1.5 (flat tip)
· Data from setting at shipment (reference pipe length 5 m).

Design of detection nozzle

● Single hole nozzle

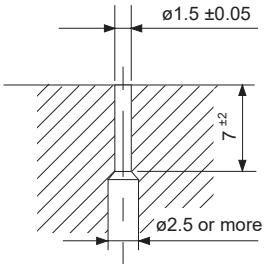

Correct nozzle shape

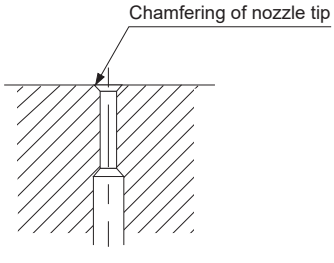

Incorrect nozzle shape

Design the detection nozzle with a point size of ø1.5 mm and depth of 7 ±2 mm. The blow-off section of the nozzle cannot be chamfered. If chamfered, the nozzle retracts from the seating surface and the reference value on the display will no longer match the actual dimensions.

MEMO

● Example of bracket model No.

GPS3 - B

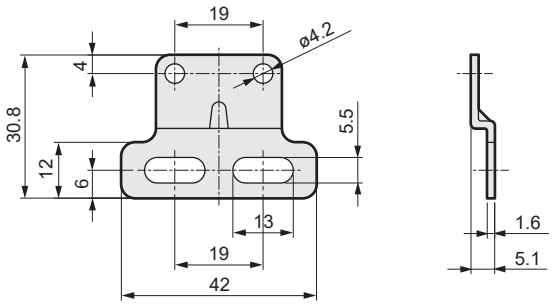

Weight: 10 g

● How to order connector cable

GPS3 - C

Code	Description
C	Cable with 5 m connector (one side elbow)
D	Cable with 5 m connector (both sides elbows/straight)

· GPS3-C

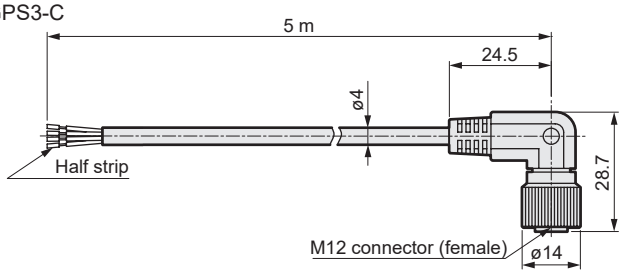

· GPS3-D

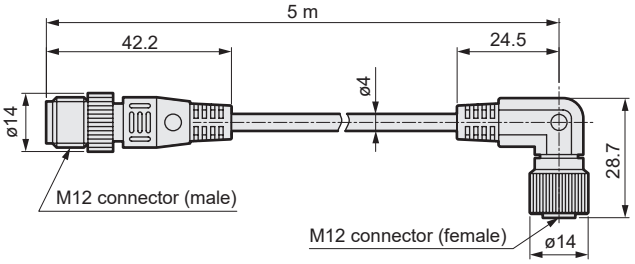

Lead wire color	Applications
Brown	Power supply +
White	Output 2
Blue	Power supply -
Black	Output 1

Weight: GPS3-C: 148 g
GPS3-D: 156 g

● How to order joiner set

C1000 - J100 - W

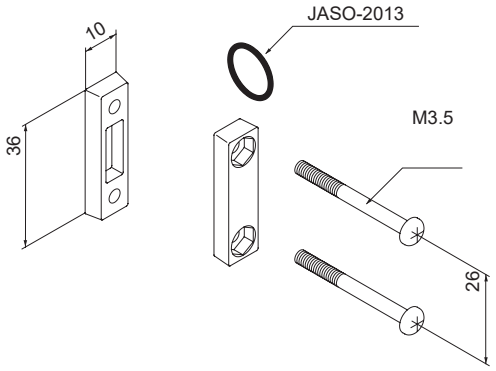

Weight: 11 g

● Gasket

C1000 - GASKET

The sales unit is 5 pieces/set.
Use with a joiner when connecting GPS3 units together.



Material: NBR

● How to order T-bracket set

B110 - W

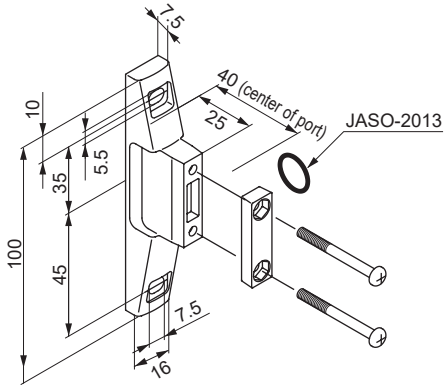

Weight: 24 g

● How to order air filter

F1000 - 8 - W

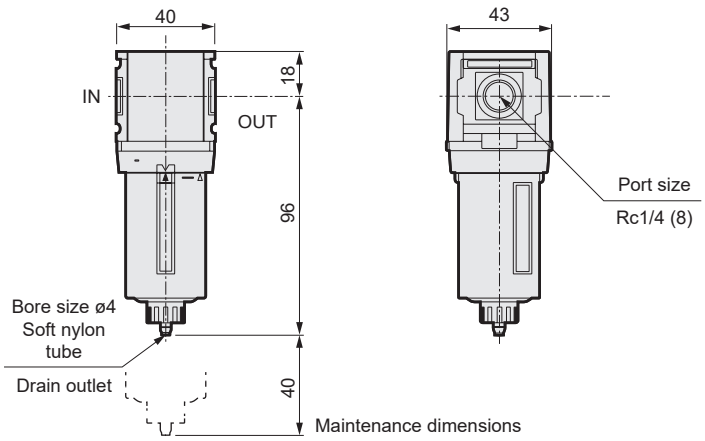

Weight: 87 g

● How to order regulator

R1000 - 8 - W - LT

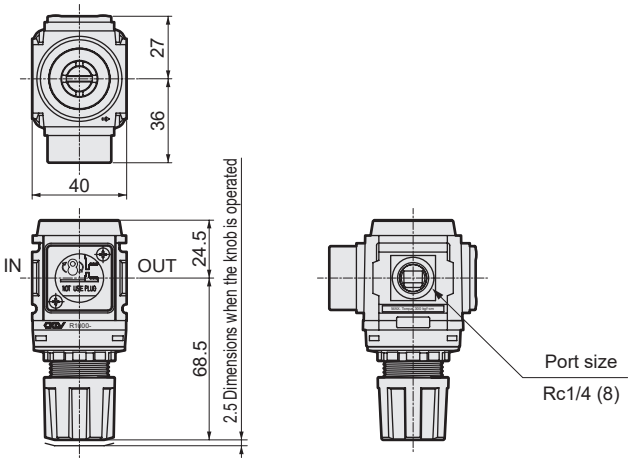

Weight: 150 g

● How to order pressure gauge with safety marker

GPS2 - G40D - 8 - P02 - S501

Ⓐ Model No.
Ⓑ Port size
Ⓒ Pressure display

Ⓐ	G40D	Pressure gauge with safety mark
Ⓑ	8	R1/4
Ⓒ	P02	0 to 0.2 MPa
	P04	0 to 0.4 MPa
	P10	0 to 1.0 MPa

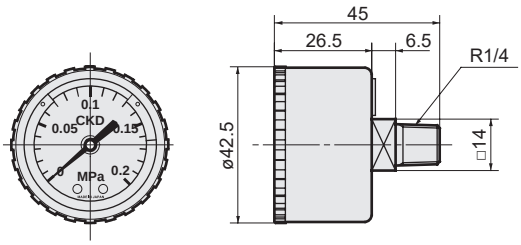

* 1. Safety zone setting range: 0.03 to 0.2 MPa
* 2. Safety zone setting max. range: 0.09 MPa
* 3. Gauge accuracy: JIS B 7505, old class 3.0
* 4. Cover material: Transparent nylon

Weight: 85 g

● How to order solenoid valve with needle

GPS2 - AB3X - 2H - FL - DC24V

Ⓐ Terminal box

2H	DIN terminal box with lamp

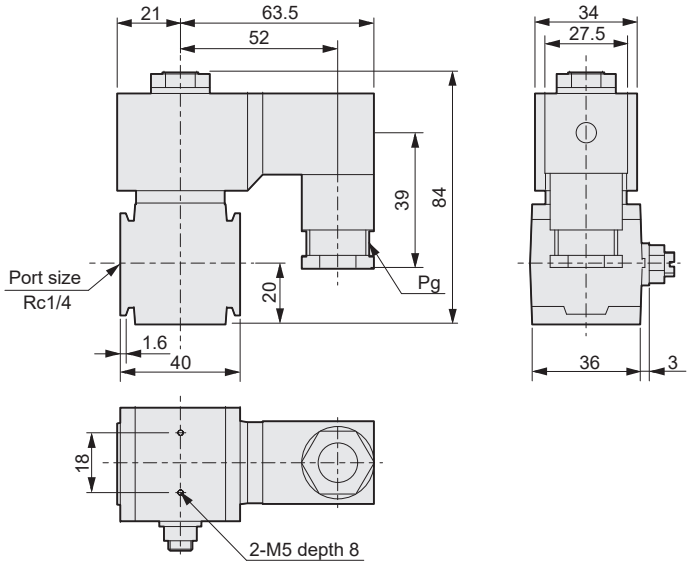

Weight: 280 g

Names and functions of display/operation section

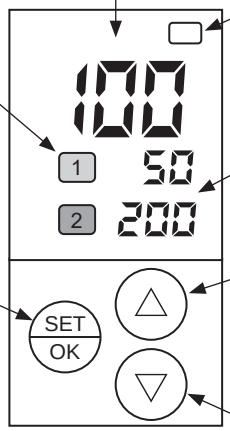

Main screen display

Displays reference value, various set values and model status.

Output display

- Display color changes once the threshold is reached. (Display color can be set to green or orange)

Notification display

Used when setting the notification display.

Sub-screen display

Displays the threshold, detection pressure and various settings.

SET/OK key

- Use to confirm the set value.
- Use to cancel when in setting mode.
- Activates numerical input.
- Use to enter settings mode.
- Use to return to the RUN mode.
- Use to revise settings (return to the settings existing when setting mode was entered).

△ Key

- Use to switch to the sub-screen when in RUN mode.
- When setting various data, this key is used to increase set values, etc.
- Use to change the setting mode.

▽ Key

- Use to switch to the sub-screen when in RUN mode.
- When setting various data, this key is used to decrease set values, etc.
- Use to change the setting mode.

Setting

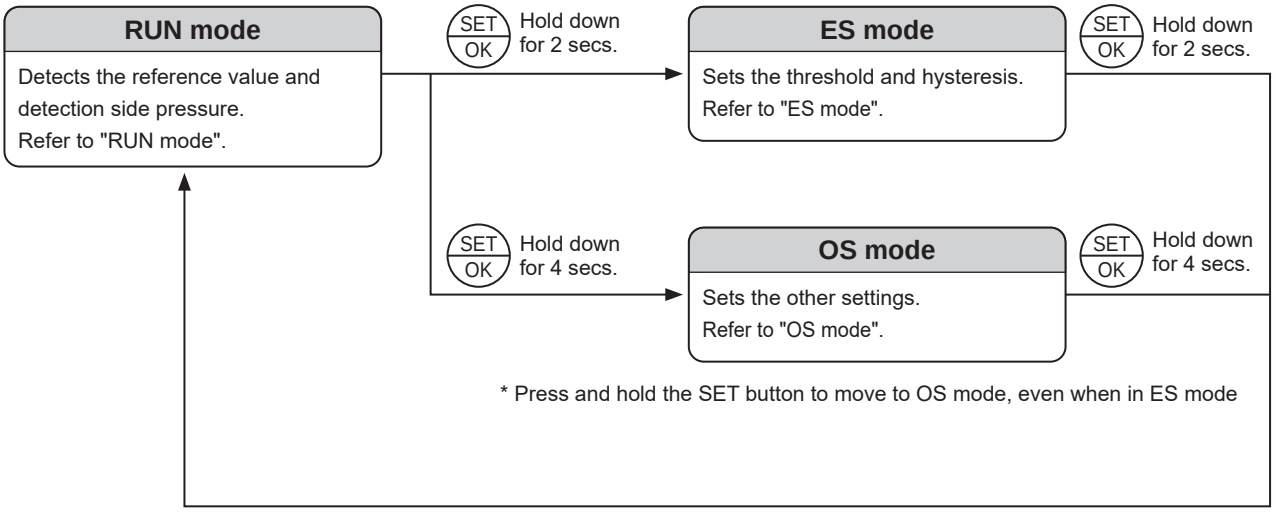

* Press and hold the SET button to move to OS mode, even when in ES mode

RUN mode (normal operation)

● RUN mode is the regular display and output operation mode which succeeds the startup display when the power is turned ON.

Startup display

The following startup display appears when the power is turned ON.

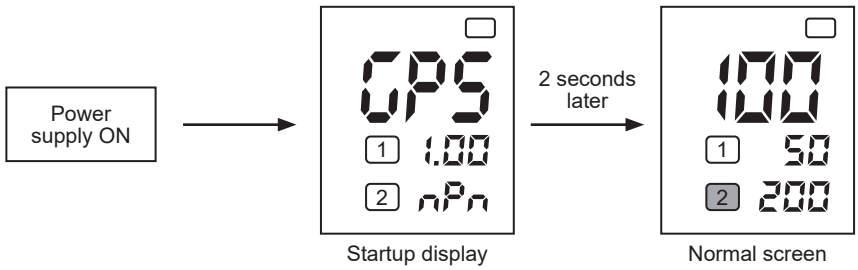

Normal screen

Screen	Display		Display color
	GPS3-E (short range)	GPS3 (wide range)	
Main screen	10 to 200 FF (beyond display range upper limit) -FF (beyond display range lower limit)	20 to 500 FF (beyond display range upper limit) -FF (beyond display range lower limit)	Green display
Sub screen	Threshold (CH1/2): 10 to 200, no display Detection side output kPa: 0 to 220 bar: 0 to 2.20 (overseas option only) psi: 0 to 31.9 (overseas option only) Output display: ON/OFF (IO-Link compatible option only)	Threshold (CH1/2): 20 to 500, no display Detection side output kPa: 0 to 220 bar: 0 to 2.20 (overseas option only) psi: 0 to 31.9 (overseas option only) Output display: ON/OFF (IO-Link compatible option only)	Green display
CH1/2 output display	ON		2-color display (green/orange) *Freely configurable
Notification display	Blinking or OFF * Freely configurable (default setting: OFF)		Orange display

Detecting abnormalities

At error detection, the main screen displays an error code indicating the content of the abnormality.
(Error code display remains until the error is canceled.)

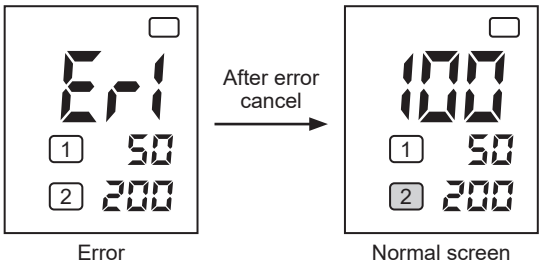

Error display	Description	Countermeasures
Er1	Sensor signal error *1 (damage/disconnection/over pressure (more than 250 kPa)/P2 ≥ P1 x 1.1)	Displayed when there is a disconnection or the sensor signal exceeds the full scale. Return supply pressure to within the rated pressure range.
Er2	Outside setting range (0-point calibration)	Turn the supply pressure OFF and conduct 0-point calibration at atmospheric pressure.
Er3	Outside setting range (various settings)	Configure within each setting range.
Er4	PIN entry error	Enter the set PIN.
Er7	Temperature sensor error *1	Use within the operating temperature range (0 to 50°C).
Er8	Overcurrent (contact output) *1	Ensure the output current is 100 mA or less.
Er9	Memory error (ROM/RAM/EEPROM)	Contact CKD for details.
-H- (blinking)	Supply pressure is above 220 kPa *1	Lower the supply pressure to within the rated pressure range.
-L- (blinking)	Supply pressure is below 45 kPa *1	Raise the supply pressure to within the rated pressure range.
FF	Above display range upper limit	GPS3-E: above 200, GPS3: above 500 Detect distance within the reference value display range.
-FF	Below display range lower limit	GPS3-E: below 10, GPS3: below 20 Detect distance within the reference value display range.

(*1: Output is OFF. Automatic recovery when back within specification range.)

Initializing

With the power supply OFF, press SET + △ + ▽ buttons simultaneously and turn the power ON.

*1: When initializing, make a note in advance of any of the current settings you wish to preserve.

*2: Display OFF at shipping (option code: T) products will switch to display ON when initialized.

Easy setting (in RUN mode)

● Frequently used settings can be configured during regular operation.

Sub screen selection

△ or ▽ can be used to switch to the sub screen.

Threshold (CH1/2) ⇔ Detection side pressure

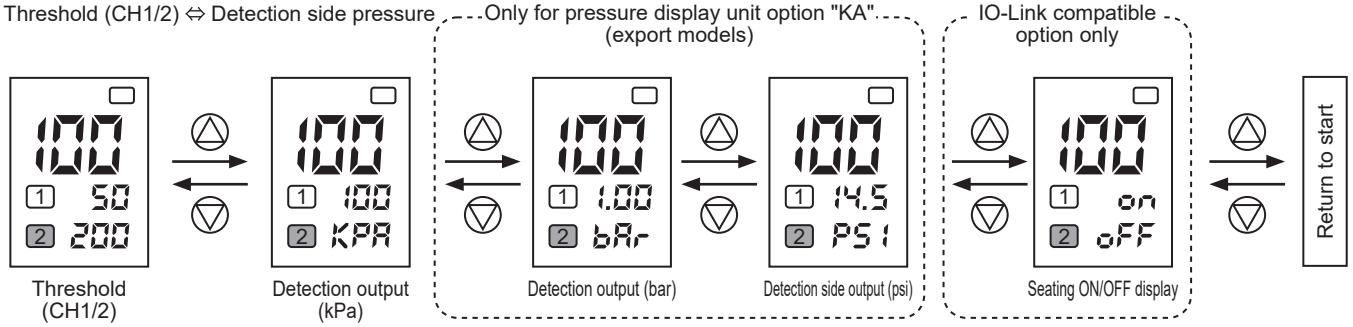

CH1 auto threshold setting

Press and hold SET + △ (2 seconds or more) to set the current display value to the CH1 threshold.

*Er3 will be displayed on the sub screen if this is outside the configurable range.

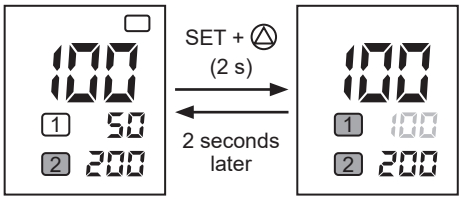

CH2 auto threshold setting

Press and hold SET + ▽ (2 seconds or more) to set the current display value to the CH2 threshold.

*Er3 will be displayed on the sub screen if this is outside the configurable range.

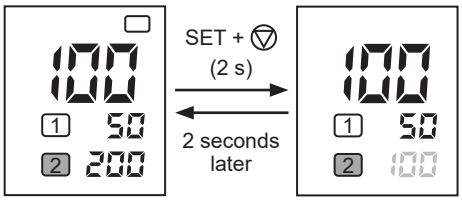

0-point calibration

△ + ▽ (2 seconds or more) to set the detection side pressure 0-point calibration. 0-point drift can be calibrated.

Set the supply pressure to OFF before making this setting.

*Er2 will be displayed on the main screen if this is outside the configurable range.

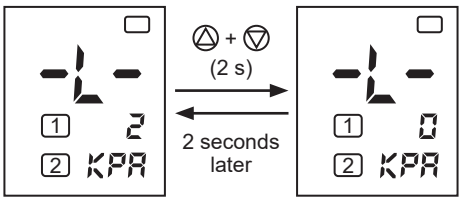

Key lock

Press and hold SET+ △ + ▽ (2 seconds or more) to set key lock and release settings.

Take care during button operation to ensure that each setting is not modified incorrectly.

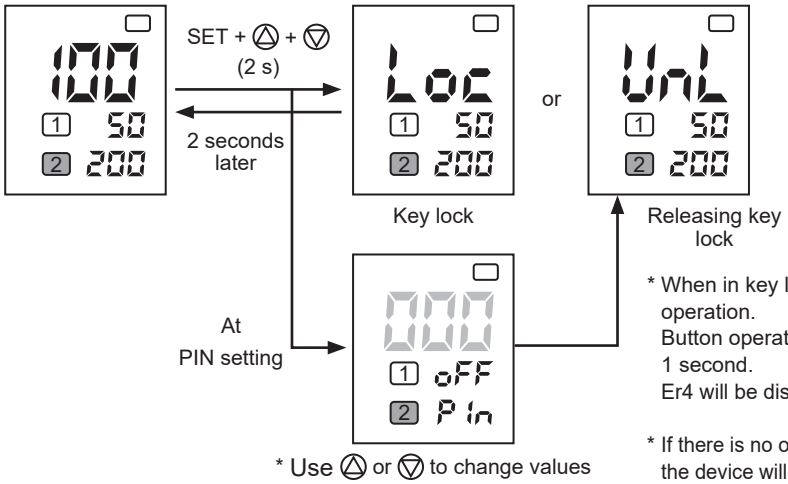

* When in key lock mode, this configuration is the only possible operation.
  Button operation in key lock mode will cause Loc to be displayed for 1 second.
  Er4 will be displayed for 1 second if an incorrect PIN is entered.

* If there is no operation for 30 seconds or more when in PIN input state, the device will return to RUN mode.

ES mode

● Sets the threshold and hysteresis.
Regular operation is halted when entering ES mode. * Outputs retain their status as of when the mode was entered.

(1) ES mode list

Display	Setting items	Description
L1	CH1 threshold	CH1 threshold setting
H1	CH1 hysteresis	CH1 hysteresis setting
L2	CH2 threshold	CH2 threshold setting
H2	CH2 hysteresis	CH2 hysteresis setting

(2) Moving to ES mode

Press and hold SET (2 seconds or more) to move from the normal screen to ES mode.
After moving to ES mode, use △ or ▽ to switch among setting items.

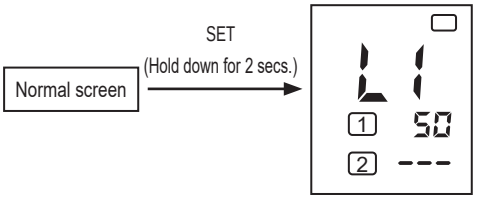

(3) Returning to the normal screen

Press and hold SET (2 seconds or more) to move to RUN mode.

CH1 threshold setting (At shipment: 50)

CH1 threshold should be set to no display or to a value in the table below.

GPS3-E (short range)	10 to 200
GPS3 (wide range)	20 to 500

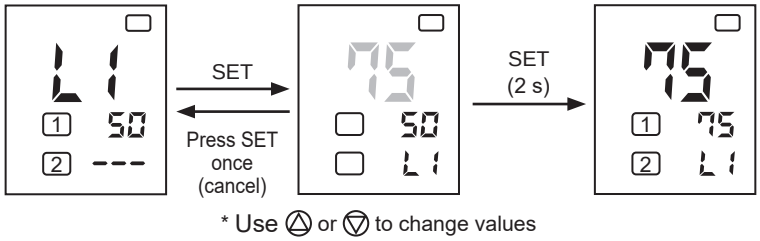

CH1 hysteresis setting (At shipment: 10)

CH1 hysteresis can be set from 1 to 20.

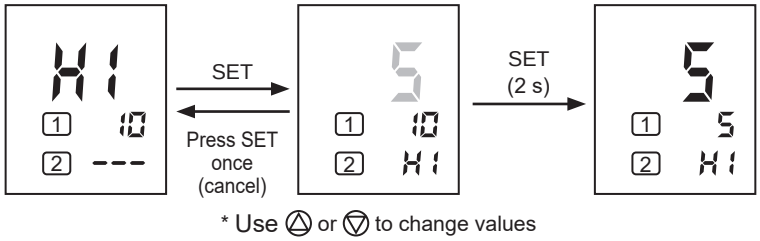

CH2 threshold setting (At shipment: 50)

CH2 threshold should be set to no display or to a value in the table below.

GPS3-E (short range)	10 to 200
GPS3 (wide range)	20 to 500

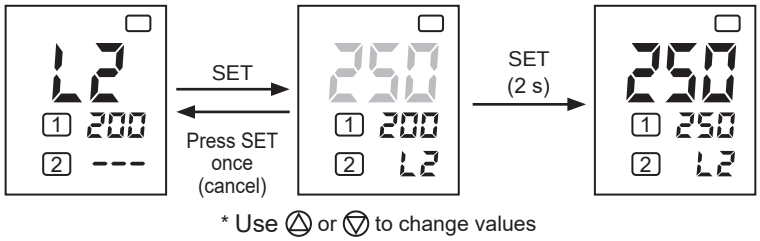

CH2 hysteresis setting (At shipment: 10)

CH2 hysteresis can be set from 1 to 20.

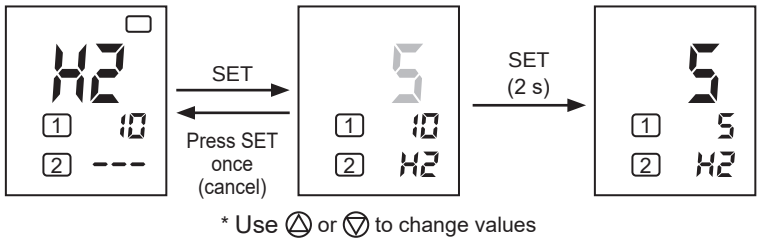

OS mode

● Sets other settings.
Regular operation is halted when entering OS mode. * Outputs retain their status as of when the mode was entered.

(1) OS mode list

Display	Setting items	Description
GS	Actual measurement calibration	Setting to match the master gauge clearance and the reference value
Cor	Display color	Setting of CH1/2 ON/OFF display colors
Por	Screen non-display	Setting of main/sub screen non-display
Inf	Notification display	Setting of orifice nozzle blockage notification display
Pin	PIN	Setting of PIN

(2) Moving to OS mode

Press and hold SET (4 seconds or more) to move from the normal screen to OS mode.
After moving to OS mode, use △ or ▽ to switch among setting items.

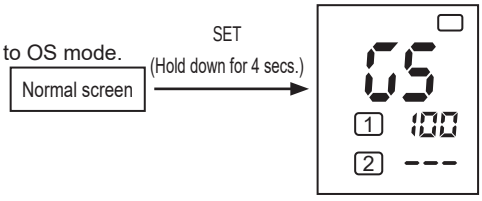

(3) Returning to the normal screen

Press and hold SET (2 seconds or more) to move to RUN mode.

Actual measurement calibration Displays the newly converted reference value based on the master setting and open setting pressure.
Setting order [1] → [2] Note: The threshold must be reconfigured after conducting actual measurement calibration.

[1] Master setting:
After installing the reference master gauge, enter the reference value numerically and record the pressure with the master gauge installed.

GPS3-E	20 to 100
GPS3	30 to 100

[2] Open setting:
Record the pressure with the nozzle open.
Note: Fully open the nozzle when using this setting.

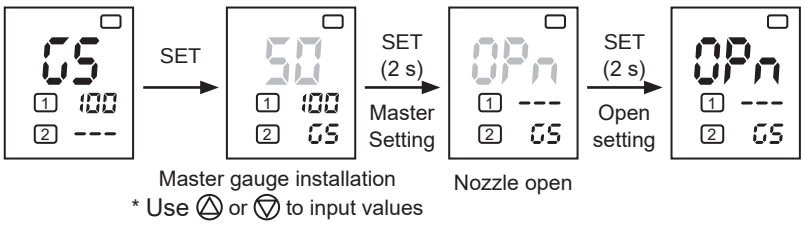

Master gauge installation
Nozzle open
* Use △ or ▽ to input values

Setting of display color (Default: Goo)

Sets the CH1/2 ON/OFF display colors.
From left: No output/CH1: ON/CH2: ON display colors.
(G is green, o is orange)

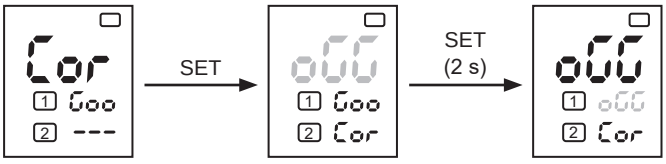

* Use △ or ▽ to select Goo or oGG

Setting of screen non-display (Default: OFF)

Sets the main/sub screen non-display settings.
Non-display for all except output display and notification display. (With this setting ON and 3 minutes without key operation)

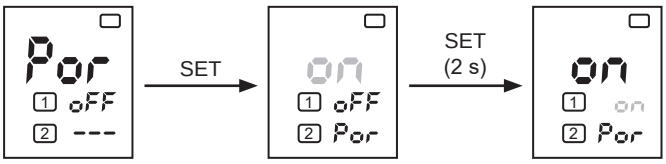

* Select OFF or ON with △ or ▽

Setting of notification display (Default: OFF)

Configure the variation in detection side pressure (%) required to activate this function. If the detection side pressure exceeds the set ratio:
Display blinks slowly (nozzle may be blocked) (*1)
If the detection side pressure falls below the set ratio:
Display blinks rapidly (internal orifice may be blocked)

(*1) When the light is blinking without a workpiece present (Blinking also occurs during regular contact, due to the detection structure)

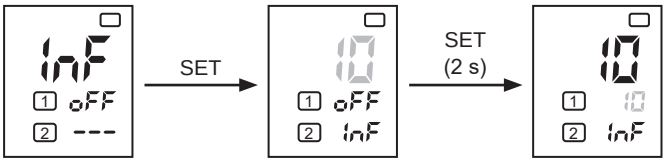

* Use △ or ▽ to change values (1 to 80)

Set the supply pressure to ON and set the nozzle to the open state.
* Er3 will be displayed on the main screen if this is outside the supply range.

Setting of PIN (Default: OFF)

Sets the PIN (000 to 999) required to release the key lock.

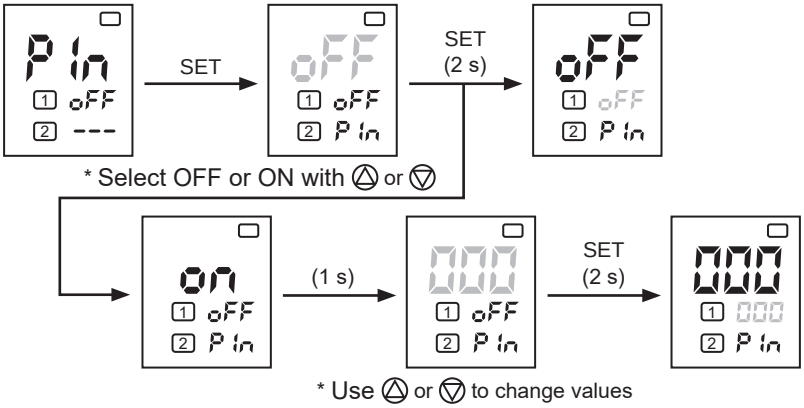

* Select OFF or ON with △ or ▽
* Use △ or ▽ to change values

* Pressing the SET button once before confirming any setting will cancel.

IO-Link parameter specifications

● Communication specifications

Descriptions	Details
Communication protocol	IO-Link
Communication protocol version	V1.1
Transmission bit rate	COM2 (38.4kbps)
Port	Class A
Process data length (input)	4 byte
Process data length (output)	0 byte
Min. cycle time	5ms
Data storage	1kbyte
SIO mode support	Yes

Bit	31	30	29	28	27	26	25	24	23	22	21	20	19	18	17	16
Data name	MSB															LSB
	Ref. value															
Data range	20 to 500 (for GPS3-L-□) 10 to 200 (for GPS3-EL-□)															
Format	UInteger16															

Bit	15	14	13	12	11	10	9	8	7	6	5	4	3	2	1	0
Data name	Error	WARNING	Alert display output (interior orifice may be clogged)	Alert display output (nozzle may be clogged)	Below display range lower limit	Beyond display range upper limit	Control output CH2	Control output CH1	Detection side pressure value *1							
Data range	True/False								-5 to 250 *3							
Format	Boolean								Integer 8							

*1 For products for which the detection pressure value can be confirmed, "V2.0" is stamped on the upper right of the product nameplate. (As products without the above printing do not use Bits 0 to 7, the detection side pressure value cannot be confirmed.)

*2 IODD files can be downloaded from the CKD website.
The IODD file to be applied differs with the above *1 printing.
Please apply the correct ver. IODD file to take advantage of product features.

*3 Display value on IODD (unit: kPa).
For information about the relation of process data and the detection side pressure value, refer to the instruction manual.

Safety Precautions

Be sure to read this section before use.
For general precautions for pneumatic components, refer to Intro Page 63.

Product-specific cautions: Digital gap switch GPS3 Series

Design/selection

⚠WARNING

■ Use the product in the range of conditions specified for the product. Contact CKD when using the product outside specifications or for special applications.

● Use of the product outside the specifications range may result in insufficient performance, and its safety cannot be guaranteed.

■ Confirm before use that the product will withstand the working environment.

● This product cannot be used in environments where functional obstacles could occur. ● The main material of this product is resin.
Do not use in atmospheres where corrosive gases are generated.
Such environments include high temperatures, chemical atmospheres, where chemical liquids, vibration, moisture, water dripping, coolant, or gas is present; where ozone is generated; chemical plants, semiconductor pre-processing, outdoors, etc.

● Compressed air quality class must satisfy JIS 1.4.1, "oil-free dry clean air."

■ This product cannot be used as a measuring instrument to display the absolute distance from the reference surface to the workpiece. It is a pressure sensor for calculating the detection output and displaying a reference value (dimensionless number). Refer to the characteristics data in the technical data for information about the relationship between reference value and distance.

■ Working fluid must be clean air from which solids, water and oil have been sufficiently removed using a dryer, filter and oil mist filter. Never supply oiled air.

● This product has a small orifice, so to prevent the entry of foreign matter, use an air filter for clean air (5 µm or less) with the recommended circuit shown below (Fig. 1).

Fig. 1 Recommended circuit

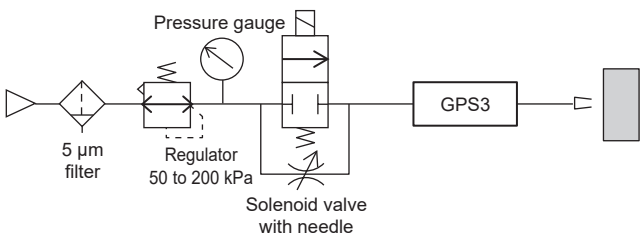

■ Do not use the following air circuits when blowing air from the detection nozzle.

● Circuit with check valve
The check valve acts as exhaust resistance, and limits the adjustable range.

● Circuit with shuttle valve and 2-way valve
Residual pressure in the OUT side of the 2-way valve prevents a correct detection. Even if a 3-way valve is used, the shuttle valve may vibrate excessively.

Fig. 2

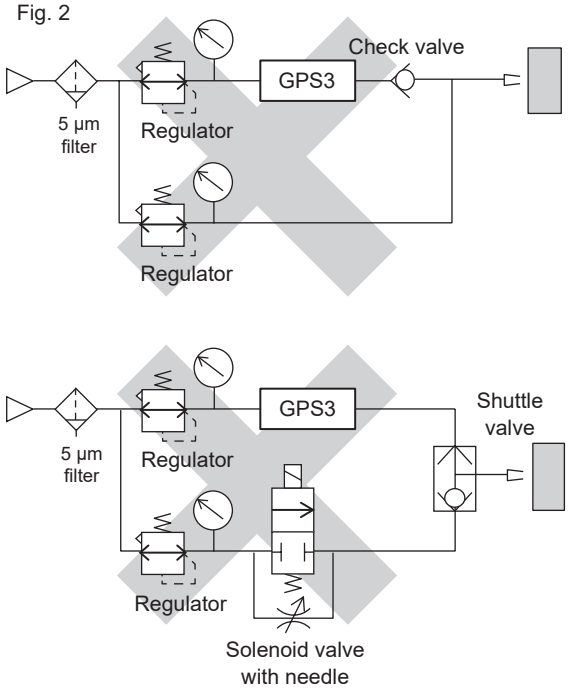

⚠CAUTION

■ The entry of compressor oil and tarry substances may obstruct the flow of air and lead to malfunction. Regularly inspect the compressor and discharge drainage.

■ Keep the air flow constant so coolant and oil do not flow back from the detection nozzle, or use a solenoid valve with needle and let in a small amount of air from the bypass as shown in the recommended circuit (Fig. 1).

■ Swarf and grinder chips, etc., could clog the nozzle. Switch the supply pressure (max. 600 kPa) when transporting the workpiece during machining processes to prevent the detection nozzle from becoming clogged. (Fig. 3)

Fig. 3 Circuit for detection and air blow

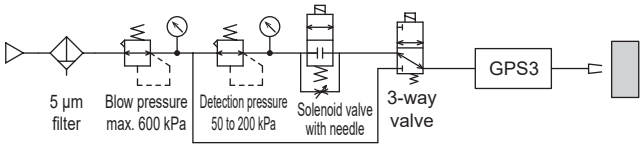

(When using high pressure, GPS3 will display "Er1" or "-H-" and the outputs will turn OFF)

■ Select an output format (NPN, PNP) matching the input unit of the programmable controller to be used.

■ Operation may be disabled if a capacitive load such as an AC/DC buzzer is connected to the load. A protection circuit is provided to prevent damage from incorrect wiring or overcurrent. A relay must be used when connecting a capacitance load.

■ Precautions

- The detection side piping (tube) has reference O.D. ø6, I.D. ø4 and length 5 m. If piping conditions (tube length) differ, use the actual measurement calibration function as needed to bring the reference values closer to the actual values.
- Contact confirmation detection using this product is effective across a 50 to 200 kPa supply pressure range. Outside the effective range the display will show "Er1", "-H-" or "-L-" and the outputs will turn OFF. In the case of a circuit like Fig. 3, "Er1" is displayed when the detection nozzle blows at high pressure. Furthermore, residual pressure may cause the output to instantaneously turn OFF → ON → OFF when normal supply pressure returns. For this circuit, disable the signal immediately after switching to a blower valve.
- When using a solenoid valve with needle on the supply side, "-L-" will be displayed when the solenoid is in the OFF state, indicating lower than normal supply pressure. However, a value will be displayed if there is a small amount of air flow through the needle, so the reference value and output should be disabled.

Mounting, installation and adjustment

⚠DANGER

■ Use with power supply voltage and output in the specified range.Applying voltage outside the specified range may cause malfunction, damage to the sensor, electrical shock, and/or fire. Do not use any load that exceeds the rated output. Using such a load may result in damage to the output part or fire.

⚠WARNING

■ Check the line color and terminal number when connecting wires. While an eddy current protection circuit for the output transistor and a protection circuit for erroneous wiring, using diodes for preventing reverse connection, are implemented, these do not protect against all incorrect wiring. Incorrect wiring can result in malfunction, failure, or damage to the sensor.
Check the instruction manual for line colors and terminal numbers in order to ensure correct wiring.

■ Ensure that wires are properly insulated.
Check that wires do not come into contact with other circuits, that no ground faults occur, and that the insulator between terminals is not defective. Otherwise, eddy current may flow into the sensor, causing damage.

⚠CAUTION

■ Observe the following items when installing.

- Install this product so the detection port faces downward.
- Install this product at a position higher than the seating surface to prevent coolant from entering.
- Provide enough space for adjustment, monitoring, and maintenance.
- Use rust-resistant material such as nylon tubes or stainless steel pipes for piping material.
- Before piping, blow pipes with compressed air to remove foreign matter and swarf.
- When connecting components and piping, ensure that no sealant tape or sealant material enters.
- When mounting the product on a device, check that no load is applied.
- When using steel pipes, securely fix the pipe to prevent excessive bending force from being applied to the connection.
- Do not strike or bump this product.
- When welding near this product, cover it to prevent spatter from coming in contact.
- When housing this product in a box, be sure to provide an exhaust port so that atmospheric pressure is maintained in the box.

■ Observe the following items when wiring.

- When using a switching regulator for the power supply, be sure to ground the F.G. (frame ground).
- Avoid using in the transient state continuing 1 s after power is turned ON.
- Take sufficient care to prevent load short-circuits or incorrect wiring. The protective circuit will activate.
- M12 connector pins are arranged as shown in Fig. 4. Take special care to prevent incorrect wiring.

- When using a load with a large rush current, such as a motor, the protection circuit will activate. In this case, use a relay.
- If there is a device (motor, welder) that generates a large surge near this product, insert a surge absorber, such as a varistor, at the source of the surge.
- If the product's lead wire is wired with the drive cable or power cable, it is affected by surge and noise deteriorating or damaging the sensor element in the switch. Use separate wiring.

■ Keep unused wires from coming into contact with other wires.

Fig. 4 Connector pin array (body side)

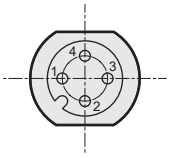

Pin No.	Lead wire color	Applications
1	Brown	Power supply +
2	White	Output 2
3	Blue	Power supply -
4	Black	Output 1 (C/Q*1)

*1: For IO-Link compatible options

■ An M12 connector is integrated into the GPS3 body. Pulling on the cable is strictly forbidden. Use cable ties to fix the cable in place.

■ Do not bundle or cross the sensor cable with AC power wiring.

■ M12 connector pin array is compatible with the GPS2 Series (wiring option C□). (Excluding pin No. 2)

- NPN output and PNP output are available. Wire the switch based on the output as shown in Fig. 5.

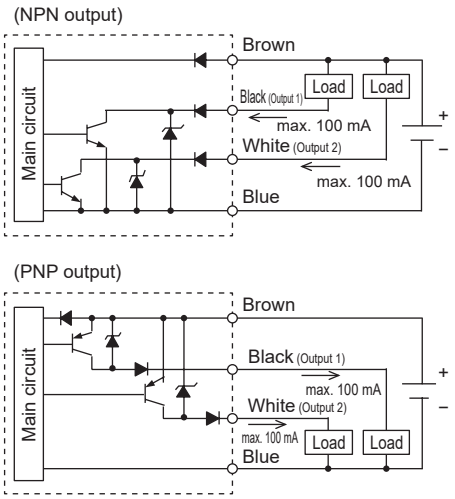

Fig. 5 Output circuit

■ Do not bump or drop this product, or apply excessive bending or tensile strength to the lead wire. This may lead to disconnection. Handle this adjustment dial with care.

■ Using a master gauge and gap gauge

- Three workers are required: one to set the gauge, one to operate the machine, and one to adjust the product. The gauge is adjusted while operating the machine, so three workers must cooperate in order to have no one exposed to risk.
- Clearance cannot be set unless the master gauge or gap gauge is accurately pressed against the detection nozzle.

Fig. 6

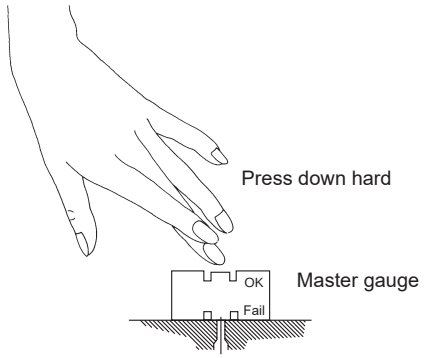

■ Use one detection nozzle for each product unit.

■ Adjustment precautions

- Threshold setting
  The following settings are possible. Refer to Operation mode for details.
  1. Auto threshold setting
     The reference value when using the master gauge at hand can be used to set the threshold.
  2. Threshold input setting
     Even without a master gauge, the threshold can be set with button operation.
- Actual measurement calibration
  Calibration enables matching of the master gauge clearance and the reference value shown on this product. Refer to Operation mode for details.
  Note: The threshold must be reconfigured after conducting actual measurement calibration.

Use/maintenance

⚠ WARNING

■ Do not touch coils or actuators with hands or body while the power is ON or immediately after it is turned OFF.
The solenoid valve coil and actuator will heat up when energized. Depending on the product, direct contact could cause burns and so use caution.

⚠ CAUTION

■ Immediately after work is started, the coolant from the nozzle may accumulate in the pipe and cause the sensor to turn ON for a short time. Wait for coolant to be discharged by detection air before starting the machine.

■ If the nozzle becomes blocked, remove the pipe on this product's side and blow out clogged foreign matter with an air gun. If foreign matter cannot be removed, poke a needle, etc., through the detection nozzle on the end.

■ When changing the output set value, turn OFF the equipment first in order to prevent unexpected operation in the control system equipment.

■ Ensure proper operation through periodic inspections.

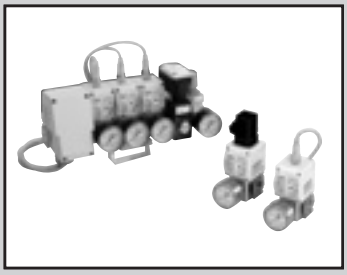

Contact confirmation switch (gap switch)

GPS2/MGPS2/UGPS2 Series

RoHS

Overview

The GPS2 Series gap switch is an air sensor used to confirm the workpiece seating and clamping contacts. While retaining the features of the conventional GPS Series, a modular unit has been realized by incorporating a joiner connection structure, and the body strength has been increased by using aluminum die-cast.

Features

● High stability

Air bridge circuit prevents the effect of fluctuations in the supply pressure.

● Easy adjustment

The sensitivity can be easily adjusted with the scale on the sensitivity adjustment dial.

● Non-contact detection

A non-contact measurement is taken, and so the product is not directly touched. Detection is possible without damaging valuable products.

● Energy saving

The air consumption rate can be suppressed since this can be used with a working pressure of 0.03 MPa.

● High precision

● Modularization

By incorporating a joiner connection, GPS2 units can be connected together, and can also be connected easily to the CKD regulator or filter.

● Robustness

The body strength has been increased by using aluminum die-cast.

● Environmental resistance

The product can be used in environments where water, etc., may splash, as it has degree of protection IP67 (connector) equivalent.

● Gap switch principle drawing

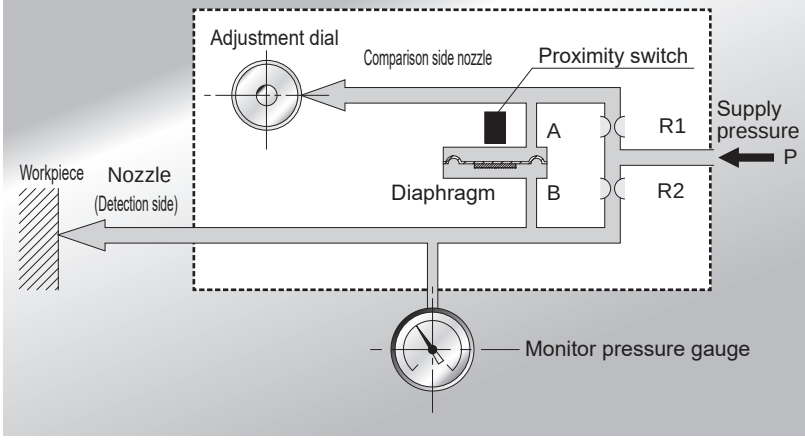

Operational explanation

The air pressurized into port P passes through orifice R1 and R2 of the air bridge circuit, and flows to the nozzles on the comparison side and on the detection side. When the detection side nozzle clearance becomes smaller than the clearance set with the adjustment dial in the comparison side nozzle, a back pressure reverses and presses up the diaphragm. This activates the proximity switch and generates an electric signal.



Contact confirmation switch (gap switch) single unit

GPS2 Series

● Port size: Rc1/8 ● Nozzle diameter: ø1.5

Specifications

1 MPa ≈ 145.0 psi, 1 MPa = 10 bar

Item			GPS2-05-15	GPS2-07-15
Working fluid			Compressed clean air (lubrication not possible)	
Working pressure (*2) kPa			30 (≈4.4 psi, 0.3 bar) to 200 (≈29 psi, 2 bar)	50 (≈7.3 psi, 0.5 bar) to 200 (≈29 psi, 2 bar)
Detection range scale mm			0.03 to 0.25	0.03 to 0.4
Repeatability mm			±0.01 (detection range scale 0.03 to 0.1 mm)	
Hysteresis mm			0.01 or less (detection range scale 0.03 to 0.1 mm)	
Detection nozzle (*1)			Single hole nozzle ø1.5 standard (ø1, ø2)	
Power supply voltage V			10.2 to 26.4 VDC	
Current consumption mA			15 or less (when using 24 VDC)	
Output style			NPN, PNP open collector	
Output rating			30 VDC, 100 mA or less	
Internal voltage drop V			2.0 or less (using 100 mA)	
Indicator lamp			LED green or yellow	
Insulation resistance			10 MΩ and over at 500 VDC megger	
Withstand voltage			No failure impressed at 1000 VAC for one minute	
Vibration resistance m/s^2			98	
Ambient temperature °C			5 (41°F) to 60 (140°F)	
Degree of protection (*3)			IP67 equivalent (connector), IP64 equivalent (DIN terminal box)	
Connection tube mm			Inner diameter 4	
Port size			Detection port Rc1/8, supply port Rc1/4, pressure gauge port Rc1/4	
Weight g			290 (electric connection option C0)	
Air consumption ℓ/min (ANR)	Working press	50 kPa	6 or less	11 or less
		100 kPa	9 or less	15 or less
		200 kPa	14 or less	24 or less

*1: The above specifications apply to the ø1.5 single-hole detection nozzle.
*2: If the nozzle clogs, working pressure should be set between 100 and 200 kPa.
*3: This product must be used under the following conditions:
(1) Piping and wiring must be completed and pressure applied. (2) A waterproof bushing must be used on the wires to the terminal box. (3) A dial cover with lock must be provided and the cover screw must be tightened.

How to order

GPS2 - 07 - 15 - N G TL - B - G2

- GPS2: Gap switch
- A Orifice size: 07
- B Setting type: 15
- C Output style: N
- D Light color: G
- E Electric connection option: TL
- F Attachments and others: B
- G Pressure gauge: G2

Code	Description
A Orifice size	
05	ø0.5
07	ø0.7
B Setting type	
15	Dial detection nozzle diameter
C Output style	
N	NPN open collector
P	PNP open collector
D Light color	
G	Green
Y	Yellow
E Electric connection option	
F	DIN terminal box (Pg11)
C0	Connector (without cable)
C1	Connector (cable 1 m attached)
C3	Connector (cable 3 m attached)
C5	Connector (cable 5 m attached)
CTL	Connector common terminal box left assembly
CTR	Connector common terminal box right assembly
TL	Lead wire common terminal box left assembly
TR	Lead wire common terminal box right assembly
Lead wire central terminal box expanding manifold	
R	Lead wire outlet direction right (left end for mounting)
L	Lead wire outlet direction left (right end for mounting)
W	Lead wire outlet direction both sides (intermediate for mounting)
F Attachments and others	
Blank	Without bracket
B	With bracket
L (*1)	Dial cover with lock
G Pressure gauge	
Blank	No pressure gauge
G2	Pressure gauge with safety mark included (G40D-8-P02-S501)
GW2	Pressure gauge assembly with safety mark (G40D-8-P02-S501)

⚠ Precautions for model No. selection

*1 : Select L for automobile- and processing machine-related applications.
*2 : Refer to pages 1302 to 1307 for option and model No. of related components.

Internal structure and parts list

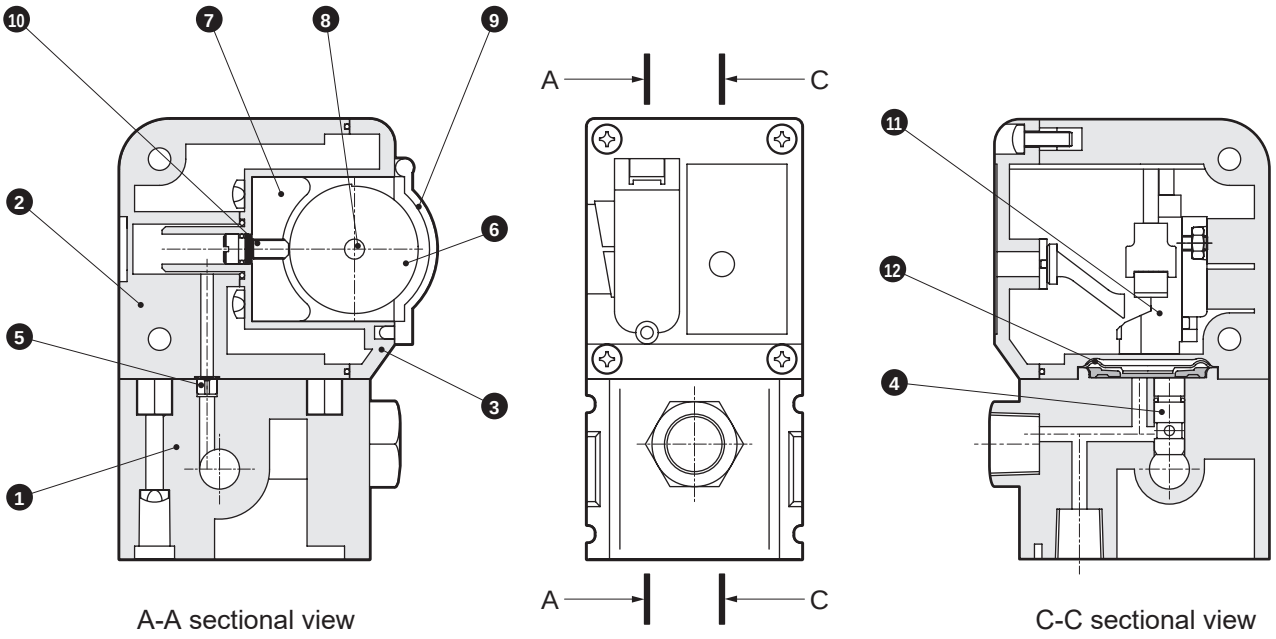

A-A sectional view

C-C sectional view

Parts list

No.	Part name	Material	No.	Part name	Material
1	Base	Aluminum	7	Dial/bracket	Aluminum
2	Body	Polybutylene terephthalate	8	Press fit pin	Stainless steel
3	Front cover	Polybutylene terephthalate	9	Dial cover	Polypropylene
4	Orifice nozzle A	Copper alloy	10	Dial nozzle	Copper alloy
5	Orifice nozzle B	Copper alloy	11	Proximity switch	-
6	Dial	Stainless steel	12	Diaphragm	HNBR

Dimensions CAD

● DIN terminal

● GPS2-*-*-**F

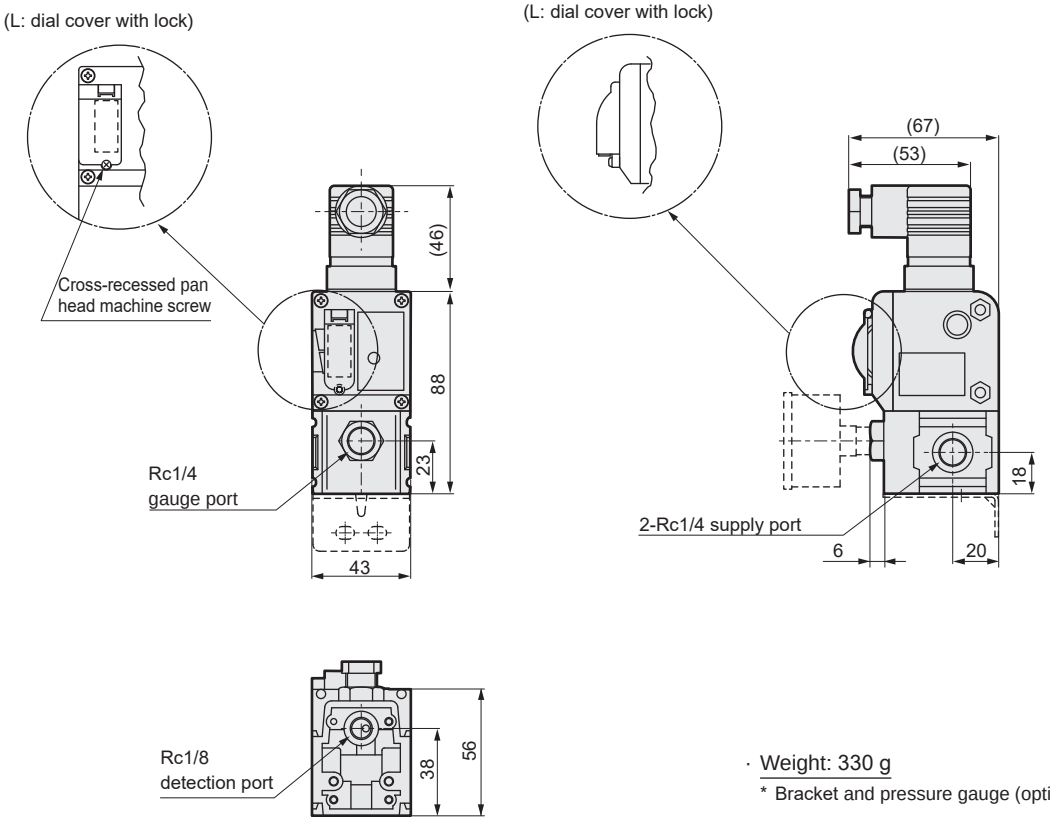

· Weight: 330 g

* Bracket and pressure gauge (option) are not included.

● Connector

● GPS2-*-*-** CO C1 C3 C5

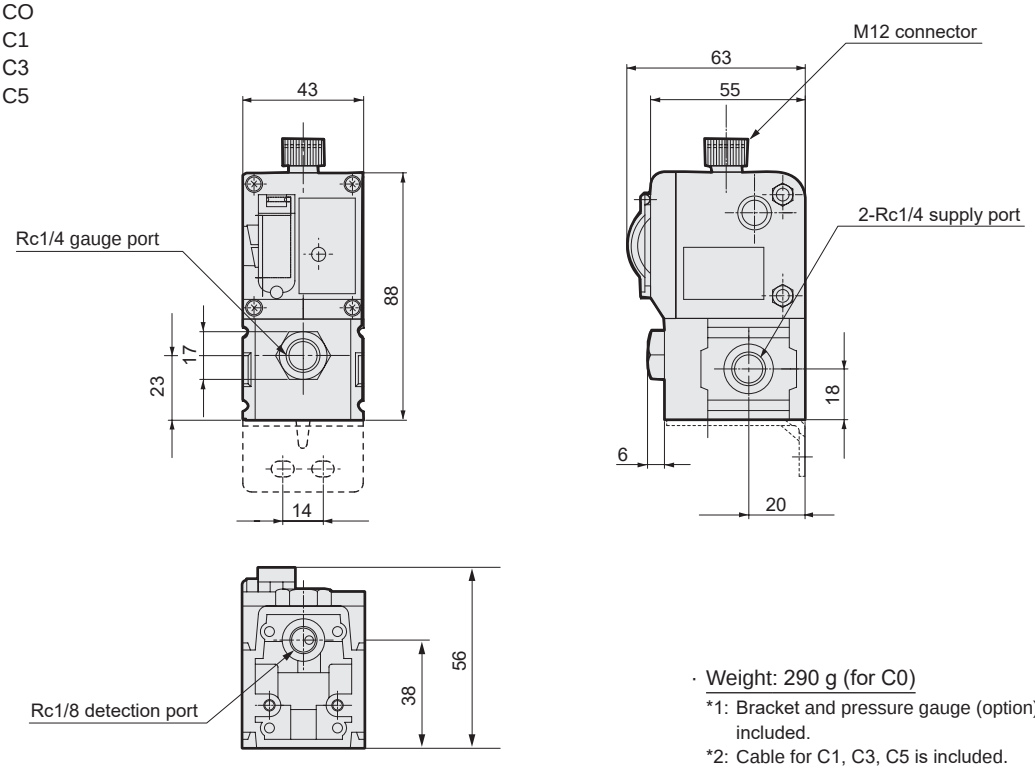

· Weight: 290 g (for C0)

*1: Bracket and pressure gauge (option) are not included.

*2: Cable for C1, C3, C5 is included. (For the cable weight, refer to the option pages.)

Note) The dial cover shape differs for the dial cover with lock. Refer to above DIN terminal.

Dimensions

● Connector common terminal box

● GPS2-**-** CTL (CTR)

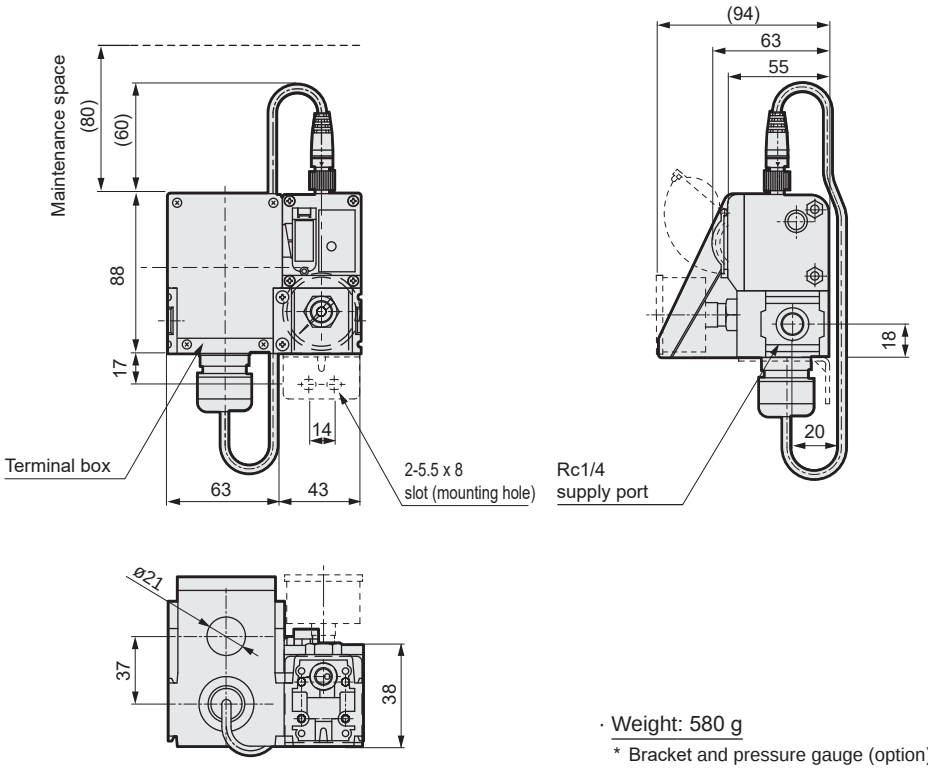

· Weight: 580 g

* Bracket and pressure gauge (option) are not included.

Note) The dial cover shape differs for the dial cover with lock. Refer to the DIN terminal box on page 1263 for shapes.

● Lead wire common terminal box

● GPS2-*-*-** TL (TR)

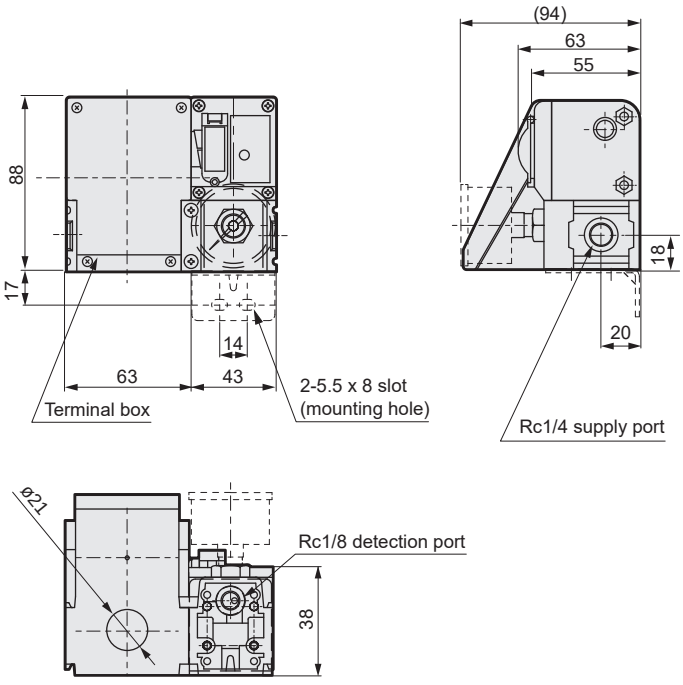

· Weight: 510 g

* Bracket and pressure gauge (option) are not included.

Note) The dial cover shape differs for the dial cover with lock. Refer to the DIN terminal box on page 1263 for shapes.

Dimensions CAD

● Single unit for lead wire common terminal box expanding manifold

● GPS2-*-*-** R L W

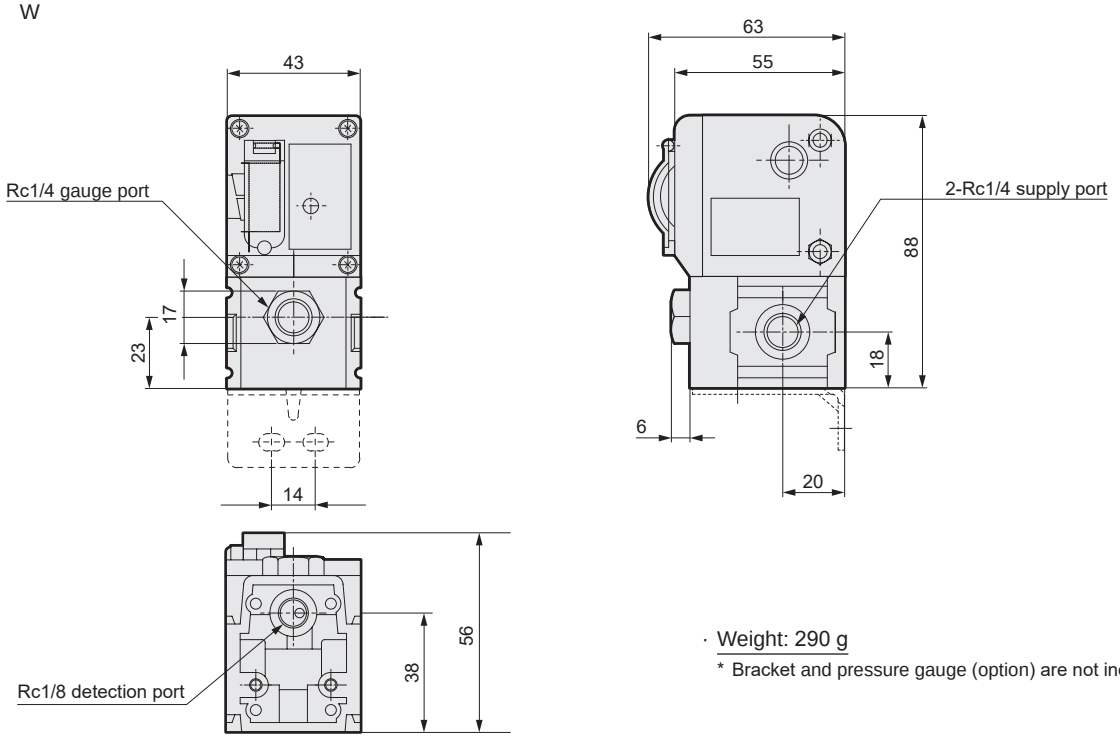

· Weight: 290 g

* Bracket and pressure gauge (option) are not included.

Note) The dial cover shape differs for the dial cover with lock. Refer to the DIN terminal box on page 1263 for shapes.

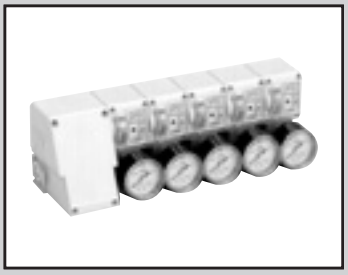

Gap switch Manifold

MGPS2 Series

● Nozzle diameter: ø1.5 (standard) ● Station No.: 2 to 5 stations

Specifications

Basic specifications are the same as the single units on page 1261.

How to order gap switch manifold

MGPS2 - 07 - 15 - 2 N Y TL - B - G2

Gap switch Manifold

Ⓐ Orifice size
Ⓑ Setting type
Ⓒ Station No.
Ⓓ Output style
Ⓔ Lamp color
Ⓕ Electric connection option
Ⓖ Attachments and others
Ⓗ Pressure gauge

Code	Description
Ⓐ Orifice size	
05	ø0.5
07	ø0.7
Ⓑ Setting type	
15	Dial detection nozzle diameter
Ⓒ Station No.	
2	2 stations
3	3 stations
4	4 stations
5	5 stations
Ⓓ Output style	
N	NPN open collector
P	PNP open collector
Ⓔ Lamp color	
G	Green
Y	Yellow
Ⓕ Electric connection option	
TL	Lead wire common terminal box left assembly
TR	Lead wire common terminal box right assembly
T1	Lead wire common terminal box (1st from left)
T2	Lead wire common terminal box (2nd from left)
T3	Lead wire common terminal box (3rd from left)
T4	Lead wire common terminal box (4th from left)
CTL	Connector common terminal box left assembly
CTR	Connector common terminal box right assembly
F	DIN terminal box (Pg11)
C0	Connector (without cable)
C1	Connector (cable 1 m attached)
C3	Connector (cable 3 m attached)
C5	Connector (cable 5 m attached)
Ⓖ Attachments and others	
Blank	Without bracket
B	With bracket
L (*1)	Dial cover with lock
Ⓗ Pressure gauge	
Blank	No pressure gauge
G2	Pressure gauge with safety mark included (G40D-8-P02-S501)
GW2	Pressure gauge assembly with safety mark (G40D-8-P02-S501)

Degree of protection

Electric connection option	Degree of protection
T *	IP66 equivalent
CT*	IP67 equivalent
F *	IP64 equivalent
C *	IP67 equivalent

Note: This product must be used under the following conditions.
(1) Piping and wiring must be completed and pressure applied.
(2) A waterproof bushing must be used on the wires to the terminal box.
(3) A dial cover with lock must be provided and the cover screw must be tightened.

⚠ Precautions for model No. selection

*1 : Select L for automobile- and processing machine-related applications.
*2: Refer to pages 1302 to 1307 for option and model No. of related components.

Terminal box installation position relation diagram

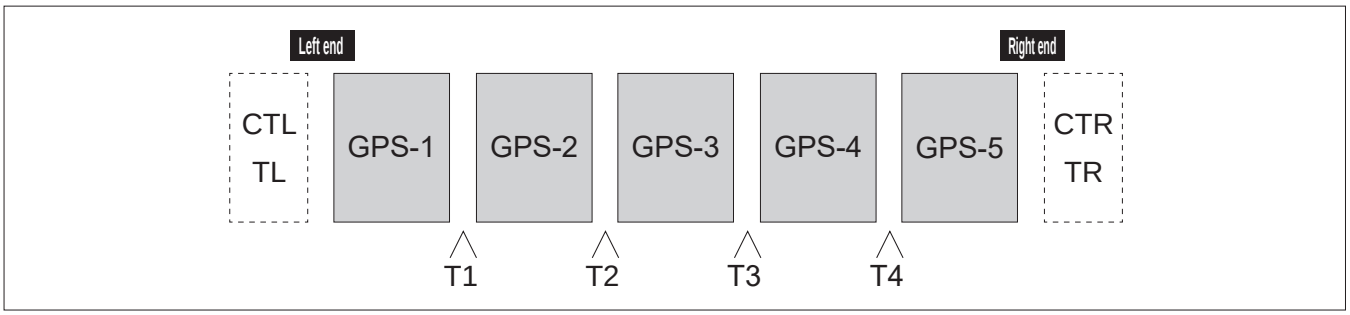

Dimensions CAD

● Manifold (lead wire common terminal box: TL/TR)

● MGPS2-*-*-*** TL (TR)

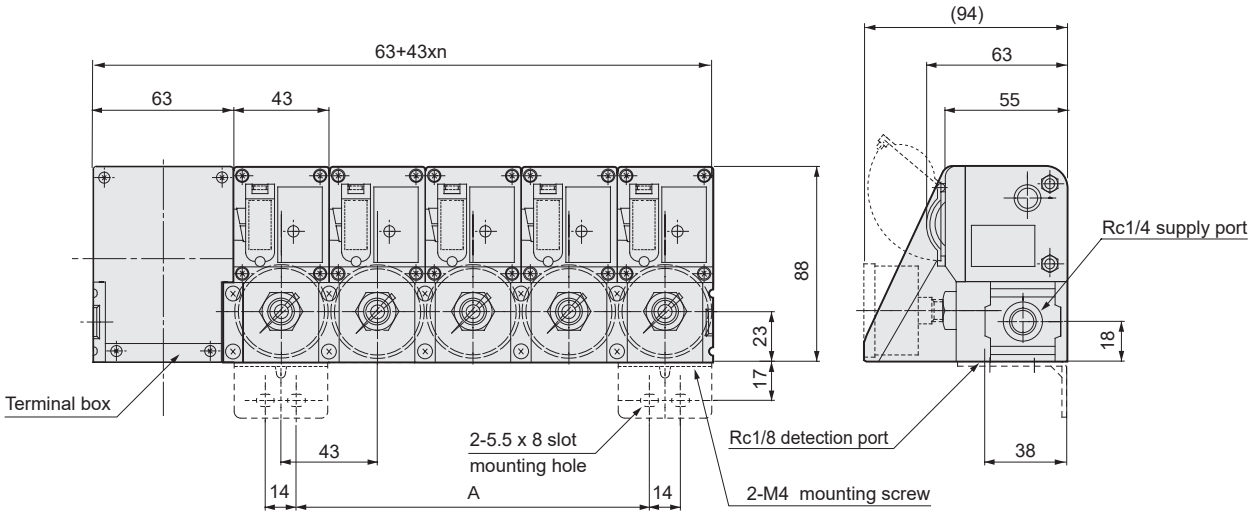

Station No.	n	A	Weight g
2 stations	2	29	820
3 stations	3	72	1130
4 stations	4	115	1440
5 stations	5	158	1750

* Bracket and pressure gauge (option) are not included.

Note) The dial cover shape differs for the dial cover with lock.
Refer to the DIN terminal box on page 1263 for shapes.

● Manifold (connector common terminal box: CTL/CTR)

● MGPS2-*-*-*** CTL (CTR)

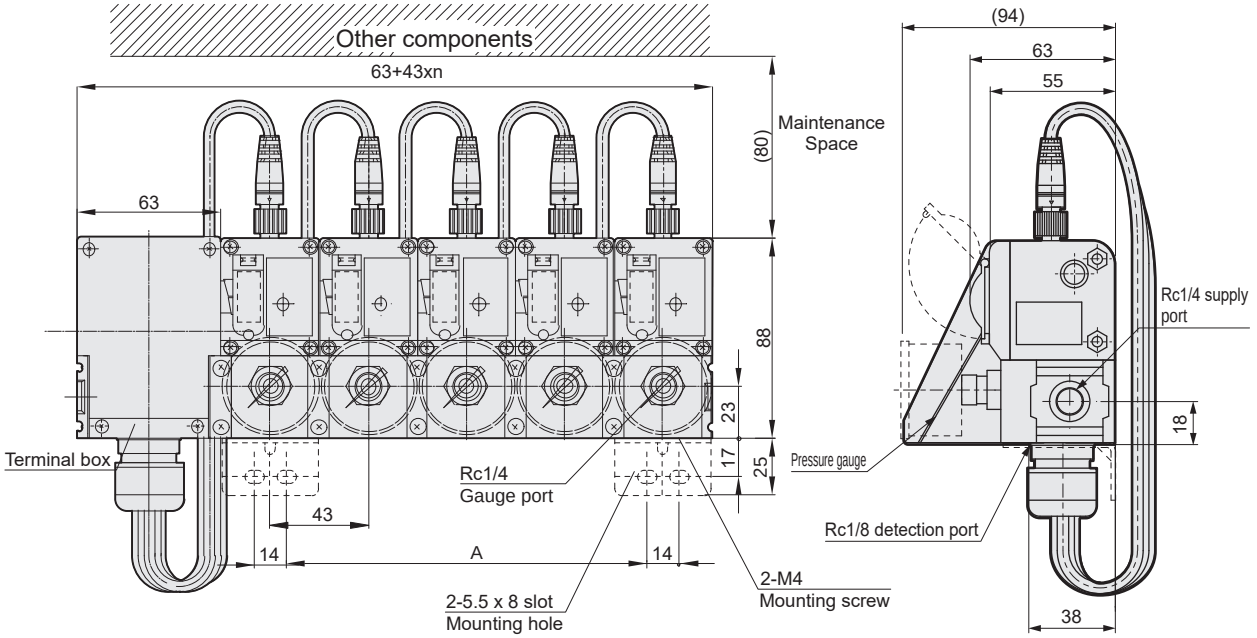

Station No.	n	A	Weight g
2 stations	2	29	930
3 stations	3	72	1270
4 stations	4	115	1610
5 stations	5	158	1960

* Bracket and pressure gauge (option) are not included.

Note) The dial cover shape differs for the dial cover with lock.
Refer to the DIN terminal box on page 1263 for shapes.

Dimensions CAD

● Manifold (DIN terminal box: F)

● MGPS2-*-*-***F

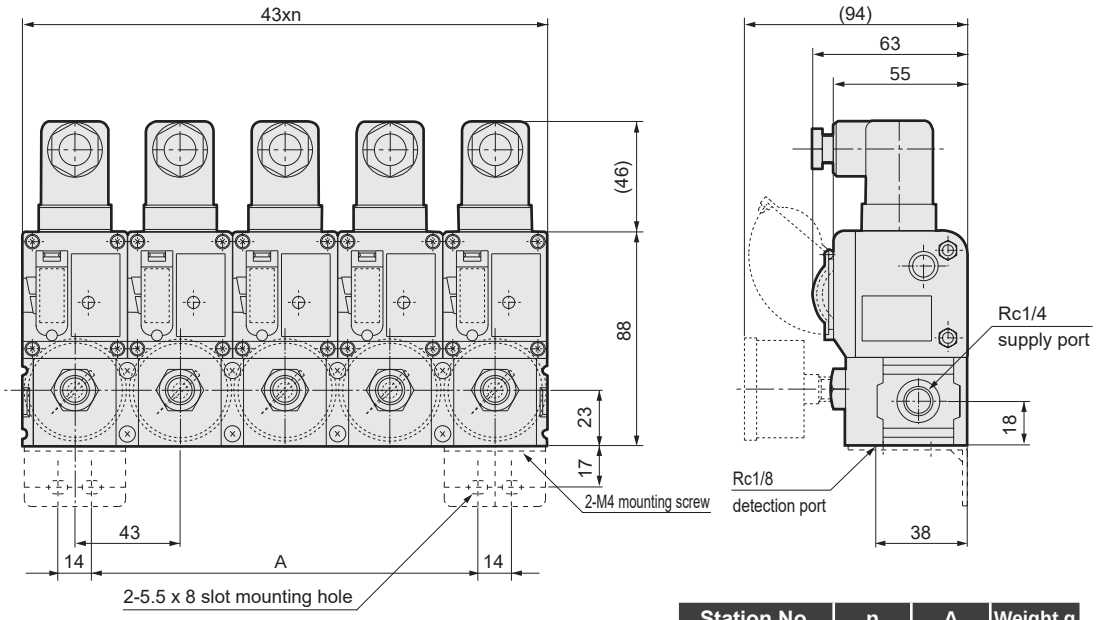

Station No.	n	A	Weight g
2 stations	2	29	680
3 stations	3	72	1020
4 stations	4	115	1360
5 stations	5	158	1700

* Bracket and pressure gauge (option) are not included.

Note) The dial cover shape differs for the dial cover with lock.
Refer to the DIN terminal box on page 1263 for shapes.

● Manifold (connector: C*)

● MGPS2-*-*-*** C0 C1 C3 C5

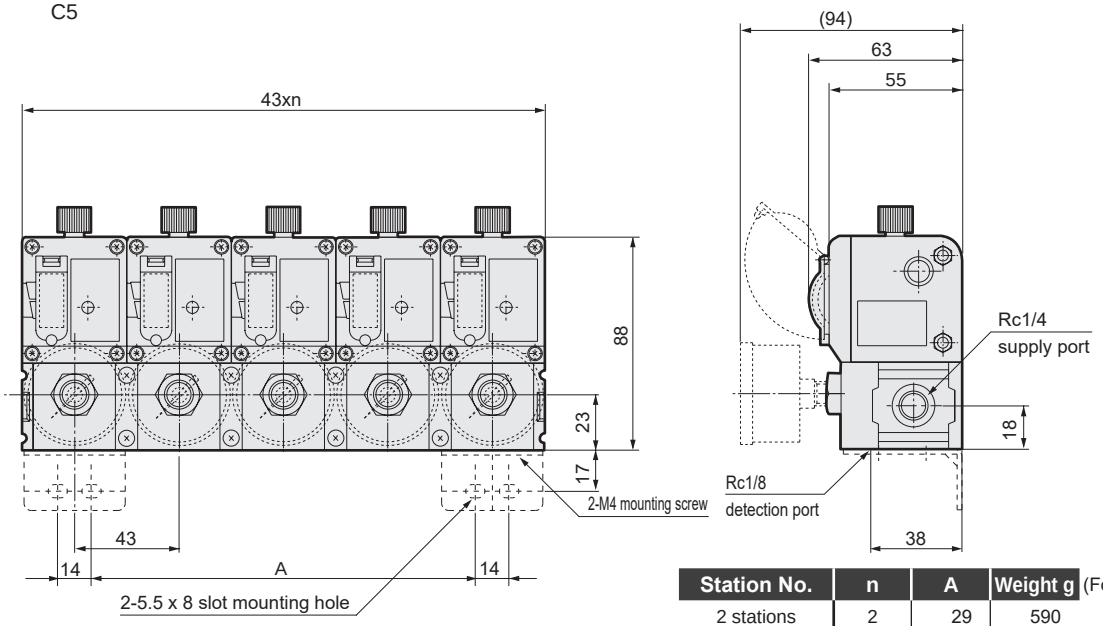

Station No.	n	A	Weight g (For C0)
2 stations	2	29	590
3 stations	3	72	880
4 stations	4	115	1180
5 stations	5	158	1480

*1: Bracket and pressure gauge (option) are not included.
*2: Cable for C1, C3, C5 is included.
(For the cable weight, refer to the option pages.)

Note) The dial cover shape differs for the dial cover with lock.
Refer to the DIN terminal box on page 1263 for shapes.

* Refer to pages 1302 to 1307 for dimensions of options and peripheral devices.

MEMO

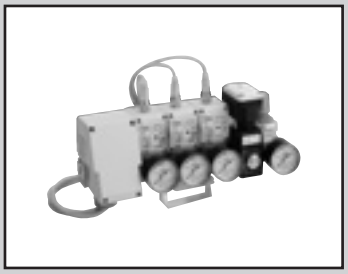

Gap switch unit

UGPS2 Series

● Solenoid valve with needle, regulator integrated general purpose unit

Specifications

Basic specifications are the same as the single units on page 1261.

How to order gap switch unit

UGPS2 - 07 - 15 - 2 N Y TL - L - GW2 - 2H - 1

Gap switch Standard unit

Code	Description
A Orifice size	
05	ø0.5
07	ø0.7
B Setting type	
15	Dial type detection nozzle diameter
C Station No.	
1	1 station
2	2 stations
3	3 stations
4	4 stations
5	5 stations
D Output style	
N	NPN open collector
P	PNP open collector
E Lamp color	
G	Green
Y	Yellow
F Electrical connection option	
TL	Lead wire common terminal box left assembly
TR	Lead wire common terminal box right assembly
CTL	Connector common terminal box left assembly
CTR	Connector common terminal box right assembly
F	DIN terminal box (Pg11)
C0	Connector (without cable)
C1	Connector (cable 1 m attached)
C3	Connector (cable 3 m attached)
C5	Connector (cable 5 m attached)
G Attachments and others	
Blank	No
L(*1)	Dial cover with lock
H Pressure gauge	
Blank(*4)	No
GW2	Pressure gauge assembly with safety marker (G40D-8-P02-S501)
I Solenoid valve electrical connection	
2E	DIN terminal box
2H	DIN terminal box with lamp
3 N	HP terminal box with lamp
J Solenoid valve voltage	
1	100 VAC
2	200 VAC
3	24 VDC

⚠ Precautions for model No. selection

*1 : Select L for automobile- and processing machine-related applications.
*2 : For CE-Marking-compatible parts, select ① Solenoid valve electric connection from 2E or 2H.
*3 : Refer to pages 1302 to 1307 for option and model No. of related components.
*4 : Regulator is also provided without pressure gauge.

Terminal box installation position relation diagram

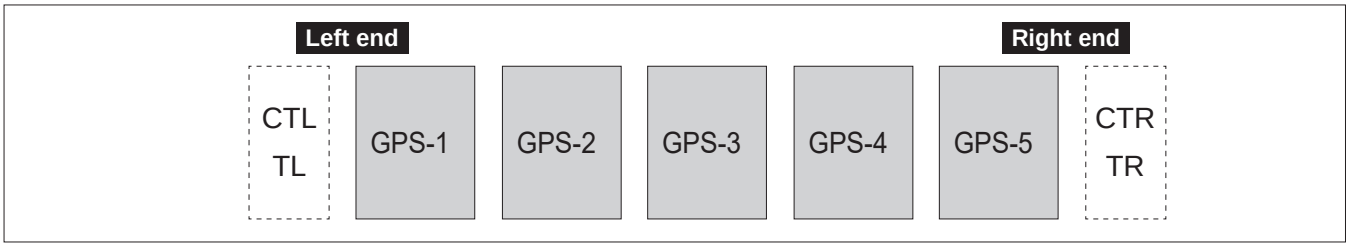

Note: The solenoid valve with needle and regulator are mounted on the opposite side of the terminal box (right side when terminal box is on left side). The terminal box does not have a supply port.

Dimensions CAD

● Gap switch unit (lead wire common terminal box: TL/TR)

● UGPS2-*-*-***TL

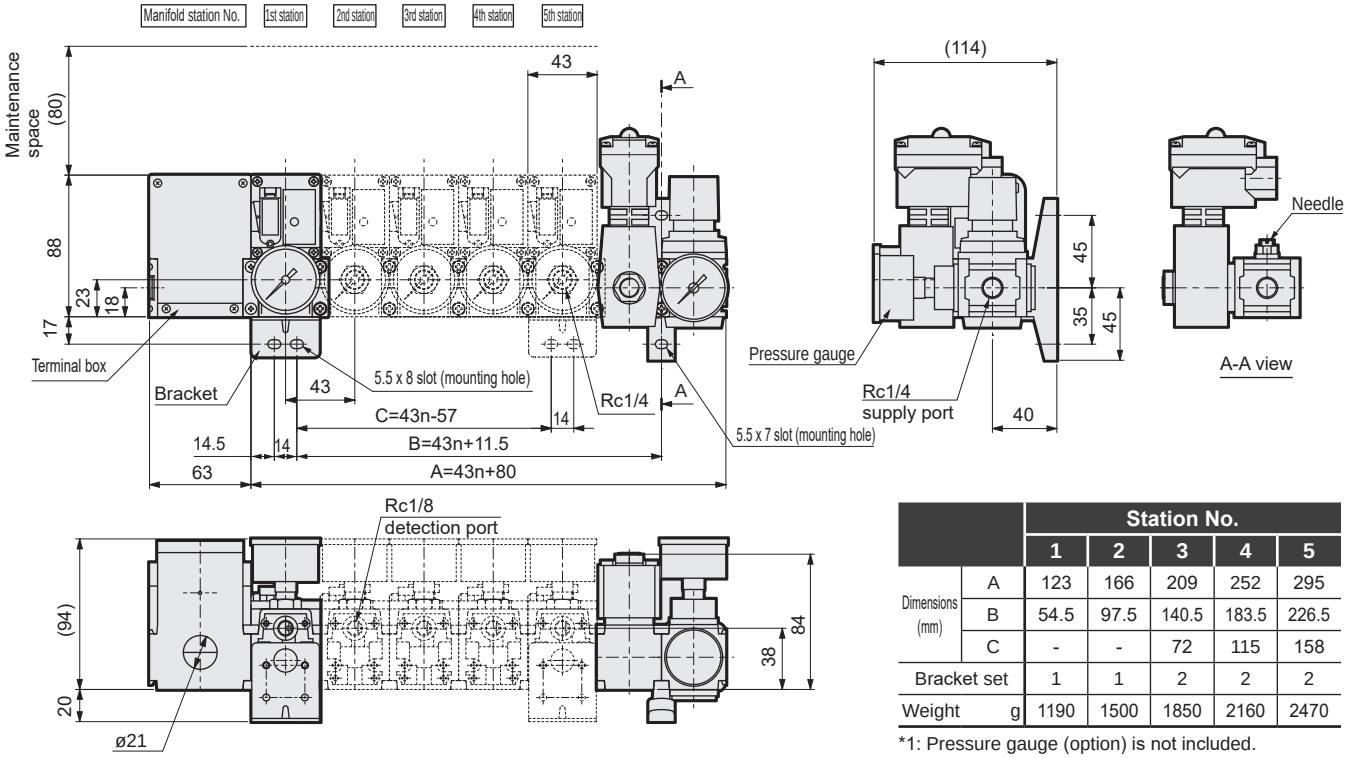

		Station No.				
		1	2	3	4	5
Dimensions (mm)	A	123	166	209	252	295
	B	54.5	97.5	140.5	183.5	226.5
	C	-	-	72	115	158
Bracket set		1	1	2	2	2
Weight	g	1190	1500	1850	2160	2470

*1: Pressure gauge (option) is not included.
*2: Solenoid valve with 3 N electrical connection.

Note) The dial cover shape differs for the dial cover with lock. Refer to the DIN terminal box on page 1263 for shapes.

● Gap switch unit (connector common terminal box: CTL/CTR)

● UGPS2-*-*-***CTL

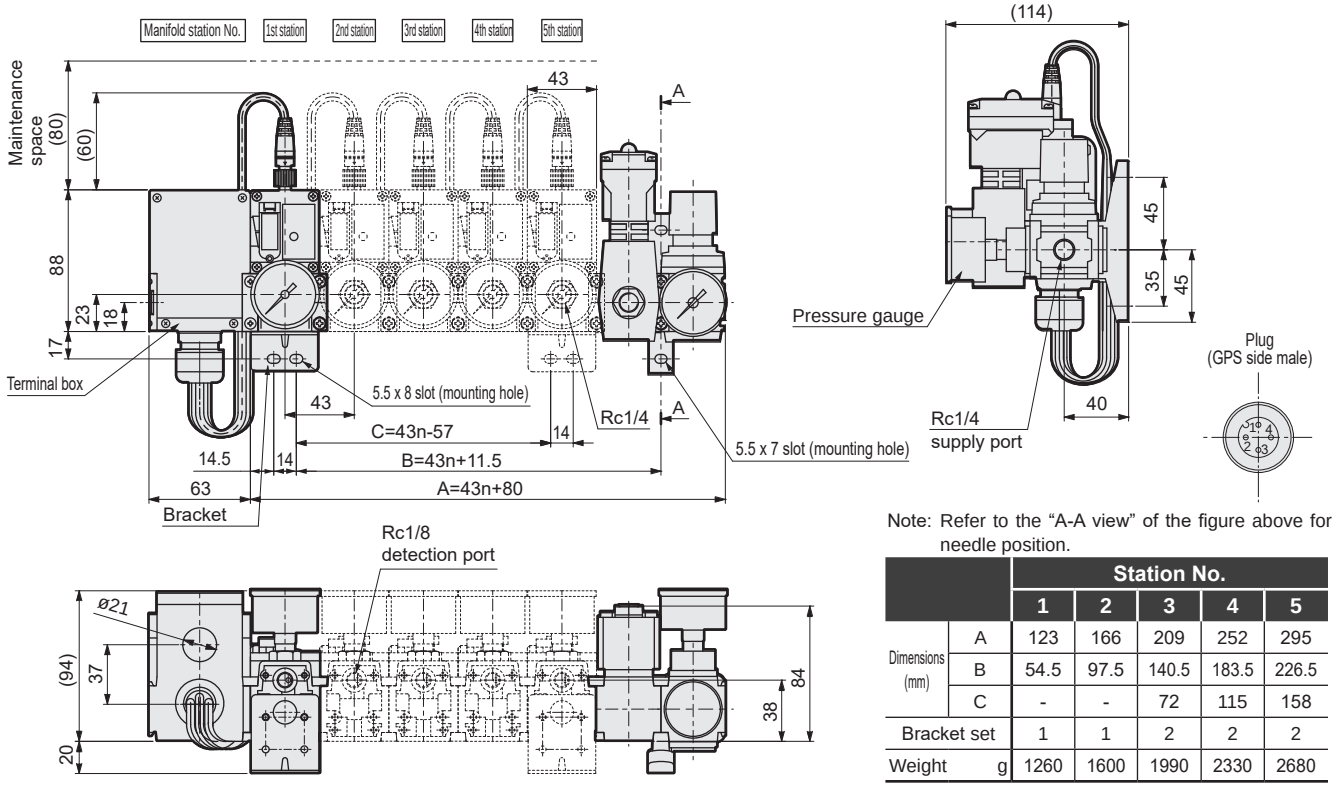

Note: Refer to the "A-A view" of the figure above for needle position.

		Station No.				
		1	2	3	4	5
Dimensions (mm)	A	123	166	209	252	295
	B	54.5	97.5	140.5	183.5	226.5
	C	-	-	72	115	158
Bracket set		1	1	2	2	2
Weight	g	1260	1600	1990	2330	2680

*1: Pressure gauge (option) is not included.
*2: Solenoid valve with 3 N electrical connection.

Note) The dial cover shape differs for the dial cover with lock. Refer to the DIN terminal box on page 1263 for shapes.

Dimensions CAD

● Gap switch unit (DIN terminal box: F)

● UGPS2-*-*-***F

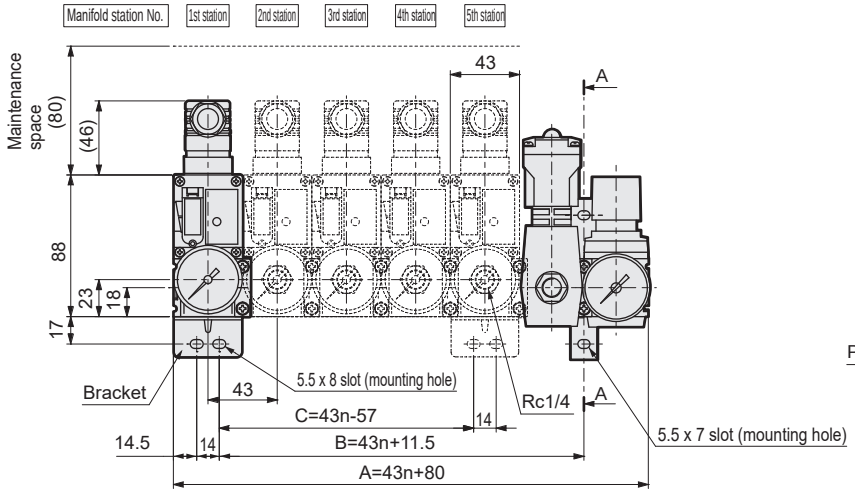

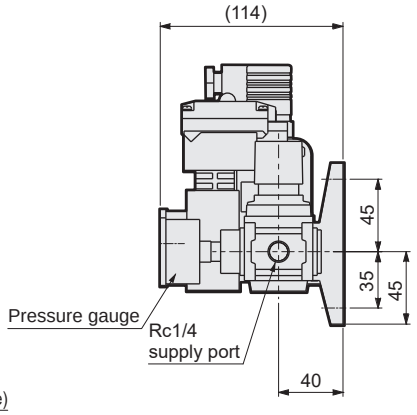

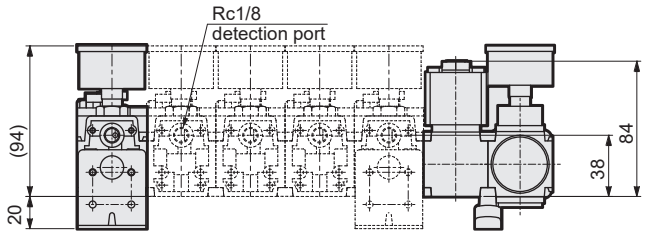

Note: Refer to the “A-A view” on the previous page for needle position.

		Station No.				
		1	2	3	4	5
Dimensions (mm)	A	123	166	209	252	295
	B	54.5	97.5	140.5	183.5	226.5
	C	-	-	72	115	158
Bracket set		1	1	2	2	2
Weight g		1010	1360	1740	2080	2420

*1: Pressure gauge (option) is not included.
*2: Solenoid valve with 3 N electrical connection.

Note) The dial cover shape differs for the dial cover with lock. Refer to the DIN terminal box on page 1263 for shapes.

● Gap switch unit (connector: C*)

● UGPS2-*-*-*** C0 C1 C3 C5

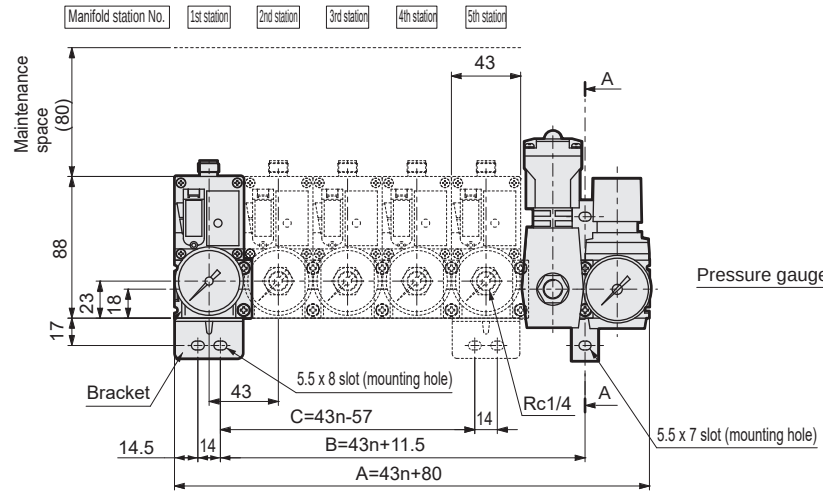

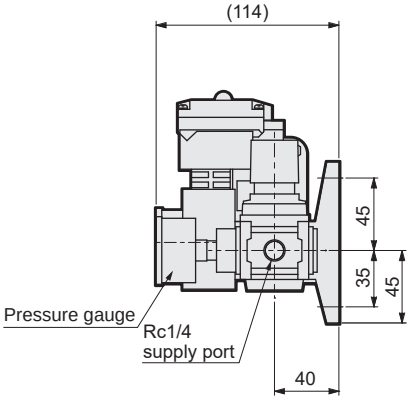

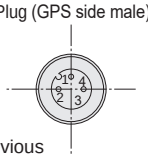

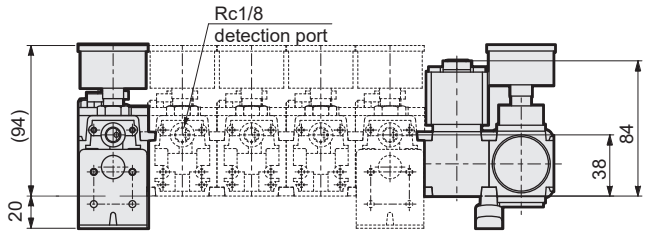

Note: Refer to the “A-A view” on the previous page for needle position.

		Station No.				
		1	2	3	4	5
Dimensions (mm)	A	123	166	209	252	295
	B	54.5	97.5	140.5	183.5	226.5
	C	-	-	72	115	158
Bracket set		1	1	2	2	2
Weight (For C0) g		970	1270	1610	1900	2200

*1: Pressure gauge (option) is not included.
*2: Solenoid valve with 3 N electrical connection.
*3: Cable for C1, C3, C5 is included.
(For the cable weight, refer to the option pages.)

Note) The dial cover shape differs for the dial cover with lock. Refer to the DIN terminal box on page 1263 for shapes.

● Refer to pages 1302 to 1307 for dimensions of options and peripheral devices.

Design of detection nozzle

● Single hole nozzle

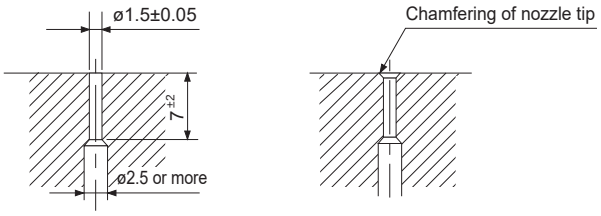

Correct nozzle shape　　Incorrect nozzle shape

Design the detection nozzle with a point size of ø1.5 mm and depth of 7 ±2 mm. The blow-off section of the nozzle cannot be chamfered. If chamfered, the nozzle retracts from the seating place, and the scale on the adjustment dial and actual dimensions do not match.

Selection of detection nozzle diameter

● When the workpiece detection surface is narrow: use ø1 mm nozzle. Contact CKD if the width is less than 3 mm.

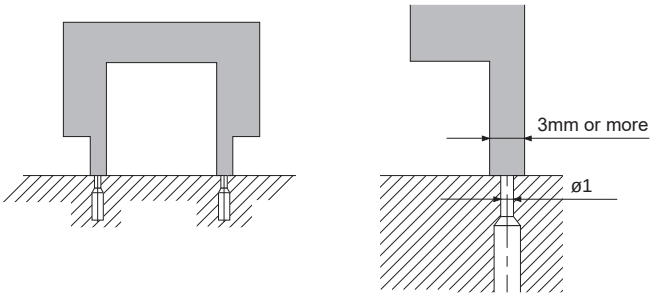

· Use with a detection distance of 0.1 mm or less.
· Use with a workpiece surface roughness of Rz = 5 or less.
· Check that nozzle does not separate from the detection surface.

● When the workpiece detection surface is sufficiently wide: Use ø1.5 mm nozzle.

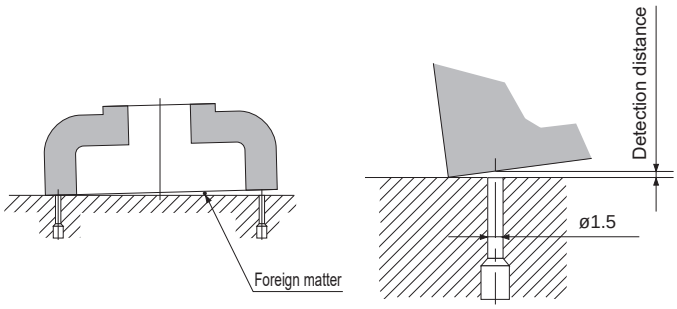

· Use with a detection distance of 0.2 mm or less.
· Use with a workpiece surface roughness of Rz = 5 or less.

● When detecting the presence of a workpiece with a rough detection surface: Use ø1.5 mm or ø2.0 mm nozzle.

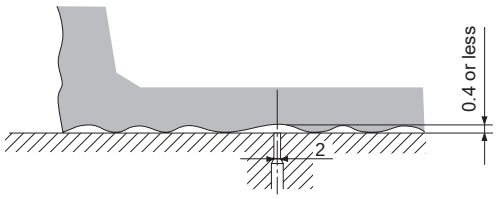

· The max. detection distance of the GPS2 is 0.4 mm. The workpiece cannot be detected if bumps exceed 0.4 mm. In that case, use the HPS-10.

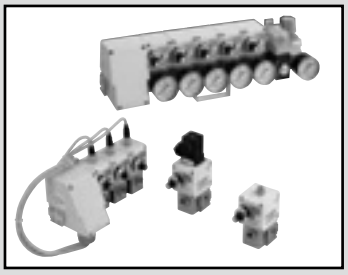

Close contact confirmation switch

HPS/MHPS/UHPS Series

RoHS

Overview

The close contact confirmation switch HPS Series incorporates a highly accurate needle mechanism to enable highly accurate detection for contact confirmation, etc.
With various special nozzles, this switch is used for a variety of position detections.

Features

- High precision
  Highly accurate variable-adjustment is possible with the precise linear needle.
  Min. detection distance 0.01 mm
  Resolution ±0.005 mm
- Low air consumption
  This switch is used with low pressure so air consumption is reduced.
- Lock mechanism with dial scale
  The position is adjusted easily with no need to worry about deviation.
- Modularization
  Modularization makes it easy to connect to the CKD module connection component.
- High stability
  Stable detection, unaffected by fluctuations in supply pressure, is possible with the air bridge circuit.
- Environmental resistance
  IP67 degree of protection: resistant to spattering coolant and other substances.
- Special nozzle usable
  The detection distance is 3 mm with the back pressure nozzle.

Close contact confirmation switch principle drawing

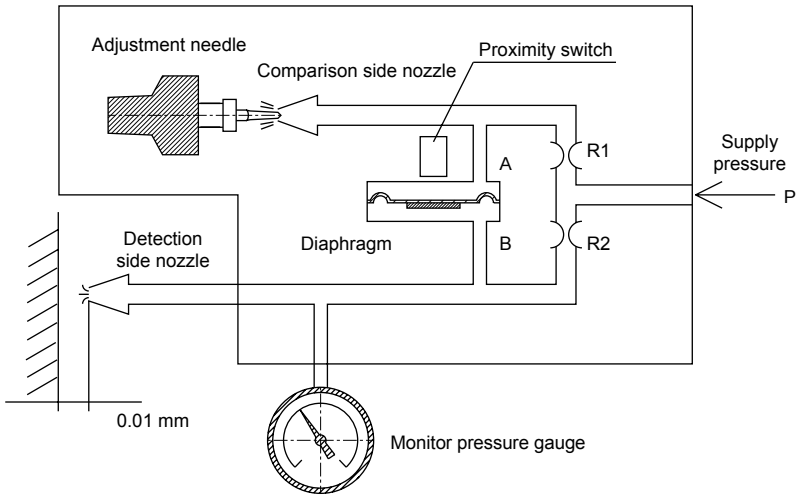

Operational explanation

● HPS body

The compressed air pressurized in the supply port P passes through orifice R1 and R2 of the air bridge circuit, and flows to nozzles on the comparison and detection sides. When the detection side nozzle clearance becomes smaller than the clearance set with the adjustment needle within the comparison side nozzle, back pressure reverses and pushes up the diaphragm. This activates the proximity switch and generates an electrical signal.

● Back pressure nozzle

The detection air is diffused as the clearance widens, and returns to atmospheric pressure at 0.7 mm when using the single-hole nozzle. However, if the outside circumference of the detection nozzle is shielded with air from another system, the detection air is not diffused as easily, making it possible to detect up to 3 mm.

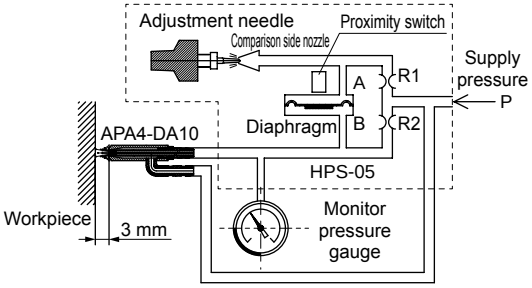

Applications

● Melted aluminum alloy die-casting leak detection

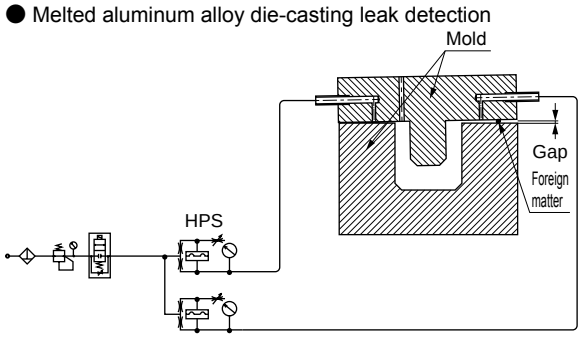

● Screw hole confirmation

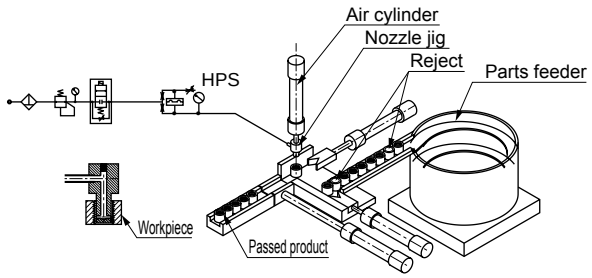

● Lathe contact confirmation

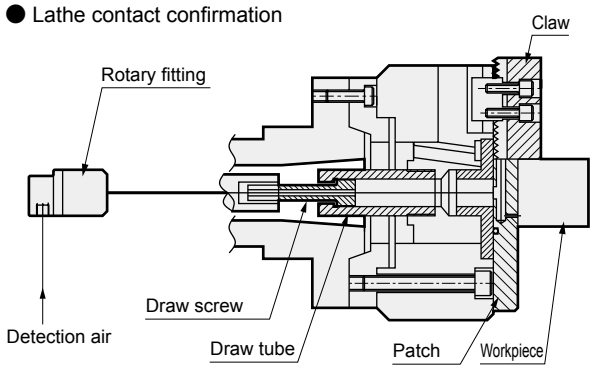

● 2 sheet feeding detection

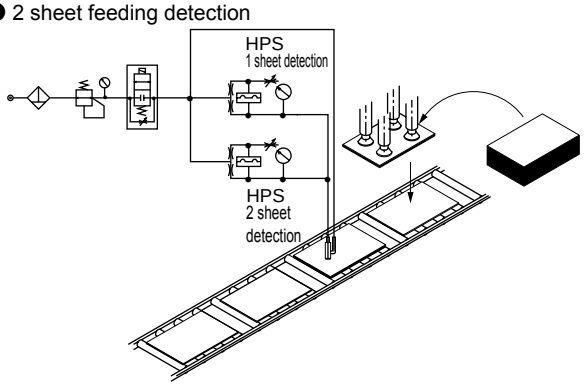

● Workpiece installation confirmation

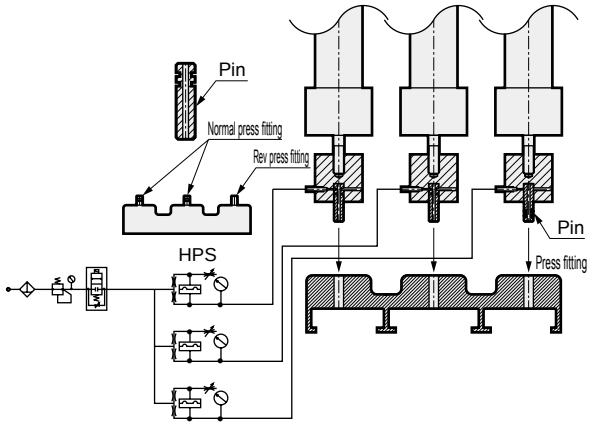

● Wafer presence confirmation

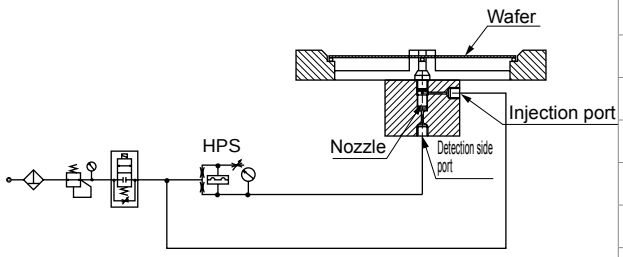

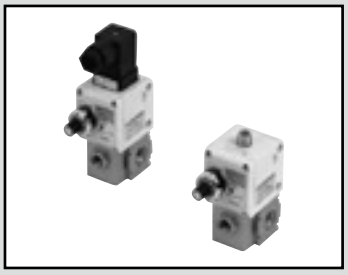

Close contact confirmation switch, single unit

HPS Series

Specifications

1 MPa = 10 bar

Item			HPS-05	HPS-07	HPS-10
Orifice size		mm	ø0.5	ø0.7	ø1.0
Working pressure		(*2) kPa	50 (≈7.3 psi) to 200 (≈29 psi)	50 (≈7.3 psi) to 200 (≈29 psi)	100 (≈15 psi) to 200 (≈29 psi)
Detection range scale		mm	0.01 to 0.2	0.02 to 0.3	0.05 to 0.7
Repeatability		mm	±0.005 (detection range scale 0.01 to 0.1)	±0.005 (detection range scale 0.02 to 0.1)	±0.02 (detection range scale 0.05 to 0.3)
Hysteresis		mm	0.005 or less (detection range scale 0.01 to 0.1)	0.005 or less (detection range scale 0.02 to 0.1)	0.01 or less (detection range scale 0.05 to 0.3)
Detection nozzle		(*1)	Single hole nozzle ø1.5		
Power supply voltage		V	DC10.2 to 26.4		
Current consumption		mA	15 or less (when using 24 VDC)		
Output style			NPN, PNP open collector		
Output rating			30 VDC, 100 mA or less		
Internal voltage drop		V	2.0 or less (when using 100 mA)		
Indicator lamp			LED green or yellow		
Insulation resistance			10 MΩ and over at 500 VDC megger		
Withstand voltage			No failure impressed at 1000 VAC for one minute		
Vibration resistance		m/sec^2	98		
Ambient temperature		°C	5 (41°F) to 60 (140°F)		
Degree of protection		(*3)	IP67 equivalent (connector), IP64 equivalent (DIN terminal box)		
Connection tube		mm	Inner diameter 4		
Port size			Detection port Rc1/8, supply port Rc1/4, pressure gauge port Rc1/4		
Weight		g	300 (electric connection option C0)		
Air consumption ℓ/min (ANR)	50 kPa (≈7.3 psi)		6	11	-
	100 kPa (≈15 psi)		9	15	24
	200 kPa (≈29 psi)		14	24	38

*1: The above specifications apply to the ø1.5 single-hole detection nozzle.
*2: If the nozzle clogs, working pressure should be set between 100 and 200 kPa.
*3: This product must be used under the following conditions:
(1) Piping and wiring must be completed and pressure applied.
(2) A waterproof bushing must be used on the wires to the terminal box.

How to order

HPS - 05 - N G TL - B - G2

- HPS: Close contact confirmation switch
- 05: A Orifice size
- N: B Output style
- G: C Lamp color
- TL: D Electric connection option
- B: E Bracket
- G2: F Pressure gauge

Code	Description
A Orifice size	
05	ø0.5
07	ø0.7
10	ø1.0
B Output style	
N	NPN open collector
P	PNP open collector
C Lamp color	
G	Green
Y	Yellow
D Electric connection option	
F	DIN terminal box (Pg11)
C0	Connector (without cable)
C1	Connector (cable 1 m included)
C3	Connector (cable 3 m included)
C5	Connector (cable 5 m included)
CTL	Connector common terminal box left assembly
CTR	Connector common terminal box right assembly
TL	Lead wire common terminal box left assembly
TR	Lead wire common terminal box right assembly
R	Lead wire direction right (left end for mounting)
L	Lead wire direction left (right end for mounting)
W	Lead wire direction both sides (intermediate for mounting)
E Bracket	
Blank	Without bracket
B	With bracket
F Pressure gauge	
Blank	No pressure gauge
G2	Pressure gauge with safety mark included (G40D-8-P02-S501)
GW2	Pressure gauge assembly with safety mark (G40D-8-P02-S501)

Precautions for model No. selection

*1: Refer to page 1287 for model No. of back pressure nozzles.
*2: Refer to pages 1302 to 1307 for option and model No. of related components.

Internal structure and parts list

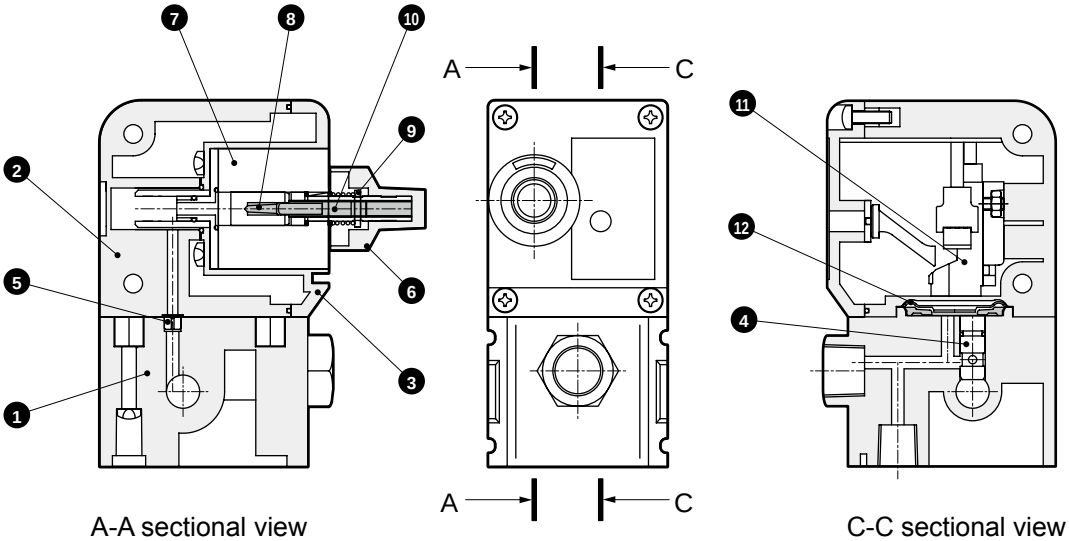

A-A sectional view

C-C sectional view

Parts list

No.	Part name	Material	No.	Part name	Material
1	Base	Aluminum	7	Needle holder	Aluminum
2	Body	Polybutylene terephthalate	8	Needle	Stainless steel
3	Front cover	Polybutylene terephthalate	9	Pin	Piano wire
4	Orifice nozzle A	Copper alloy	10	Needle shaft	Copper alloy
5	Orifice nozzle B	Copper alloy	11	Proximity switch	-
6	Dial	Aluminum alloy, polyamide, etc.	12	Diaphragm	HNBR

Dimensions CAD

● Basic HPS-*-*** R L W

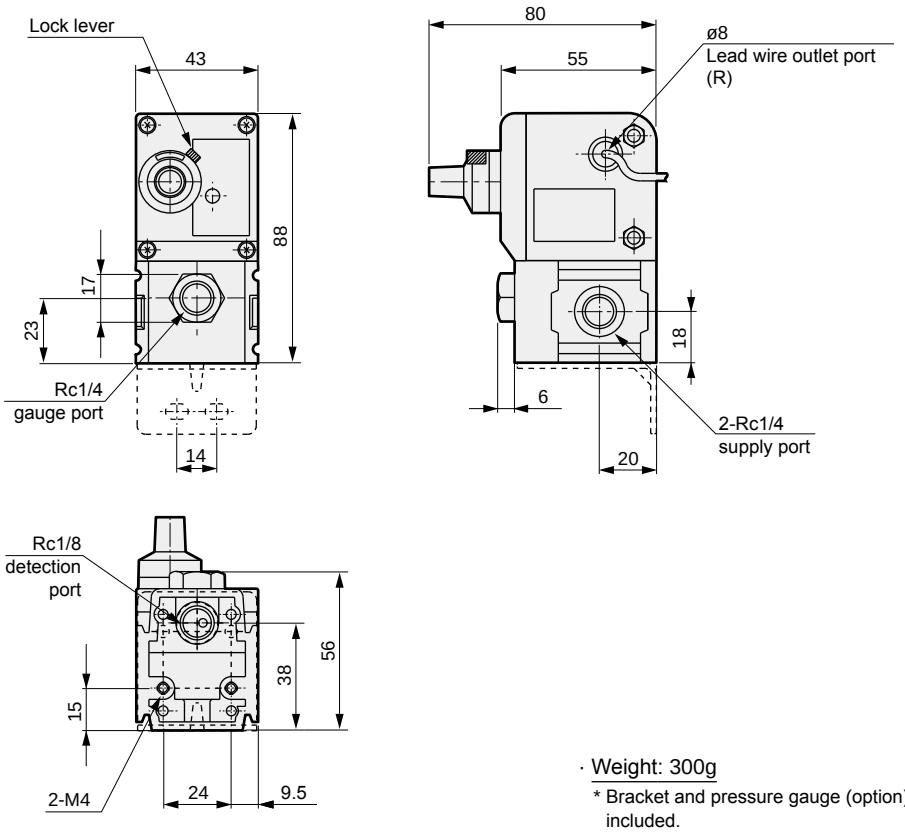

· Weight: 300g

* Bracket and pressure gauge (option) are not included.

● DIN terminal box HPS-*-***F

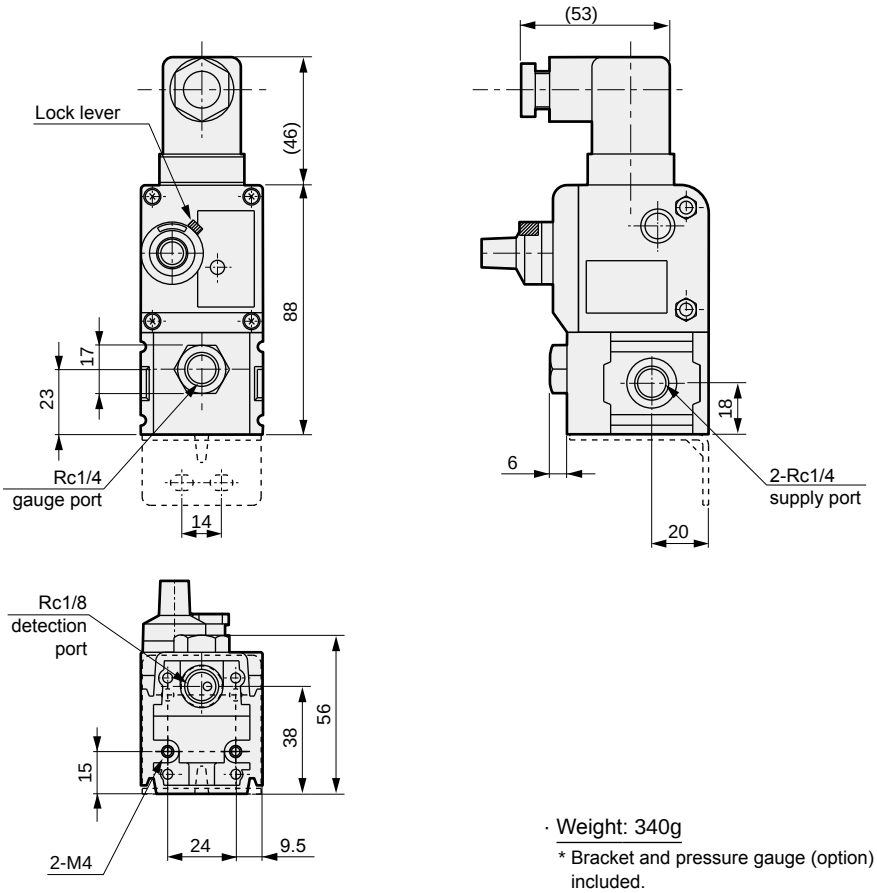

· Weight: 340g

* Bracket and pressure gauge (option) are not included.

Dimensions CAD

● Connector HPS-*-*** C0 C1 C3 C5

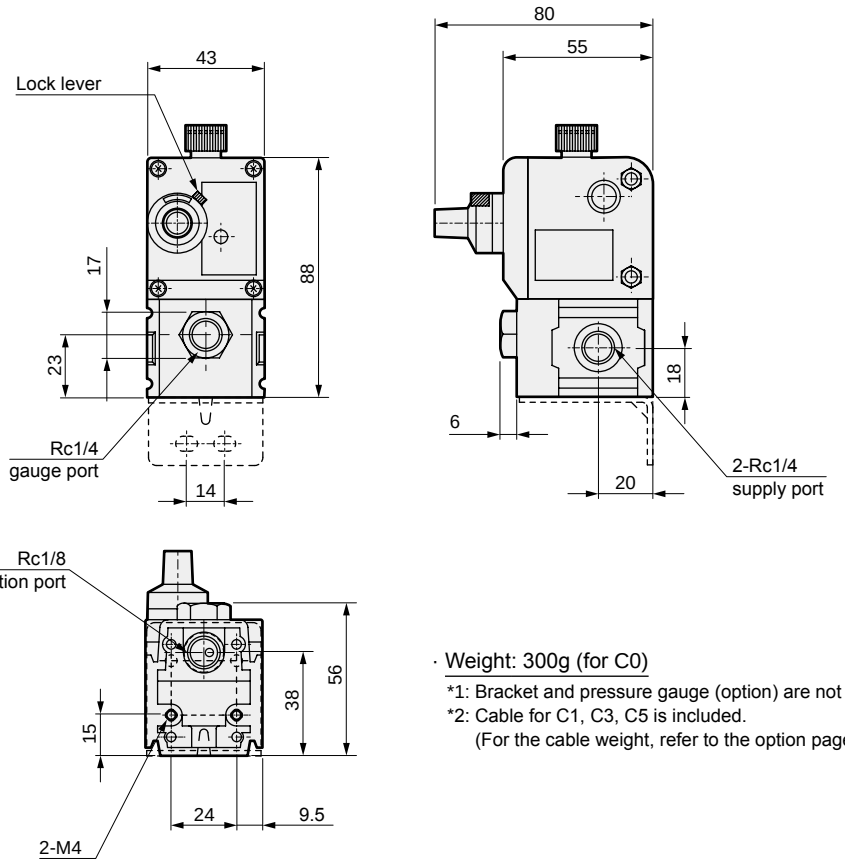

· Weight: 300g (for C0)

*1: Bracket and pressure gauge (option) are not included.
*2: Cable for C1, C3, C5 is included.
(For the cable weight, refer to the option pages.)

● Connector common terminal box HPS-*-*** CTL (CTR)

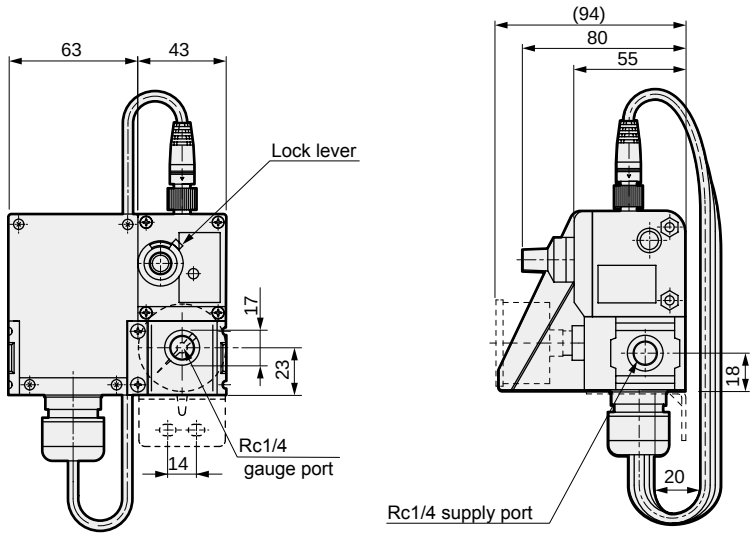

· Weight: 583g

* Bracket and pressure gauge (option) are not included.

● Lead wire common terminal box HPS-*-*** TL (TR)

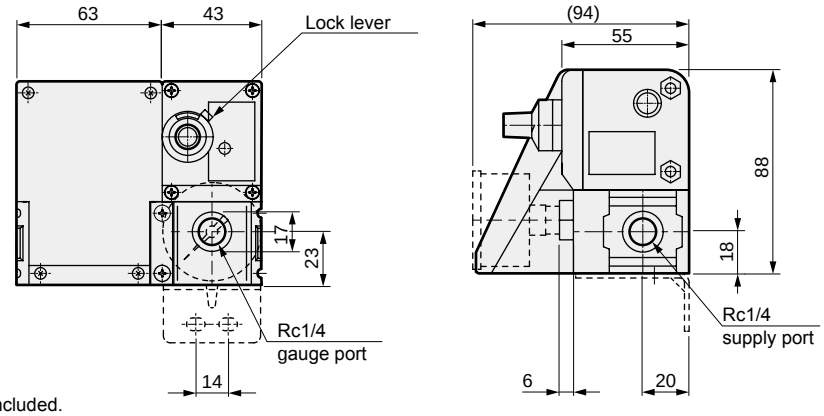

· Weight: 513g

*1: Bracket and pressure gauge (option) are not included.

● Refer to pages 1302 to 1307 for dimensions of options and peripheral devices.

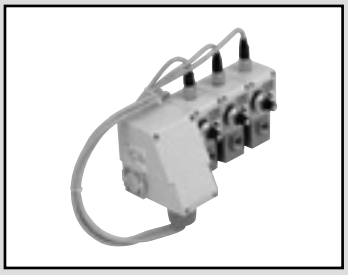

Close contact confirmation switch manifold

MHPS Series

Specifications

Basic specifications are the same as the single units on page 1276.

How to order

MHPS - 05 - 2 N Y TL - B - G2

- Close contact confirmation switch
- A Orifice size
- B Station No.
- C Output style
- D Lamp color
- E Electric connection option
- F Bracket
- G Pressure gauge

Code	Description
A Orifice size	
05	ø0.5
07	ø0.7
10	ø1.0
B Station No.	
2	2 stations
3	3 stations
4	4 stations
5	5 stations
C Output style	
N	NPN open collector
P	PNP open collector
D Lamp color	
G	Green
Y	Yellow
E Electric connection option	
F	DIN terminal box (Pg11)
C0	Connector (without cable)
C1	Connector (cable 1 m included)
C3	Connector (cable 3 m included)
C5	Connector (cable 5 m included)
CTL	Connector common terminal box left assembly
CTR	Connector common terminal box right assembly
TL	Lead wire common terminal box left assembly
TR	Lead wire common terminal box right assembly
T1	Lead wire common terminal box (1st from left)
T2	Lead wire common terminal box (2nd from left)
T3	Lead wire common terminal box (3rd from left)
T4	Lead wire common terminal box (4th from left)
F Bracket	
Blank	Without bracket
B	With bracket
G Pressure gauge	
Blank	No pressure gauge
G2	Pressure gauge with safety mark included (G40D-8-P02-S501)
GW2	Pressure gauge assembly with safety mark (G40D-8-P02-S501)

Precautions for model No. selection

*1: Refer to page 1287 for model No. of back pressure nozzles.
*2: Refer to pages 1302 to 1307 for option and model No. of related components.

Degree of protection

Electric connection option	Degree of protection
T*	IP66 equivalent
CT*	IP67 equivalent
F*	IP64 equivalent
C*	IP67 equivalent

Note: This product must be used under the following conditions.
(1) Piping and wiring must be completed and pressure applied.
(2) A waterproof bushing must be used on the wires to the terminal box.

Terminal box installation position relation diagram

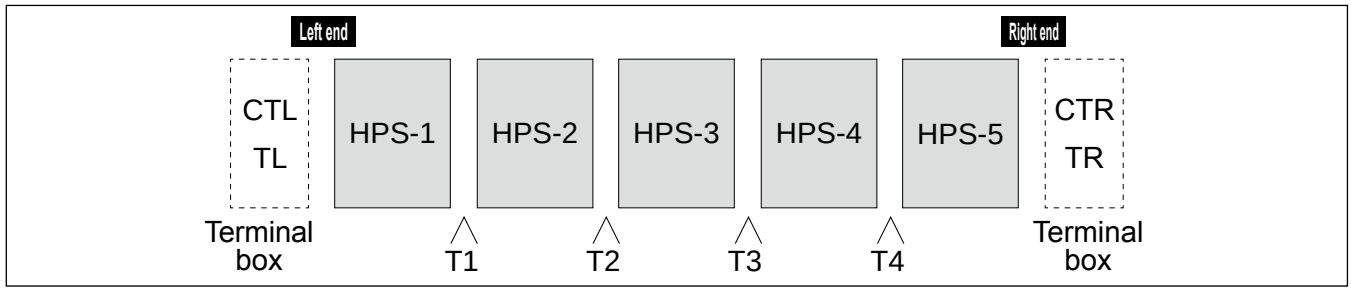

Dimensions CAD

● Manifold (DIN terminal box: F)

● MHPS-*-***F

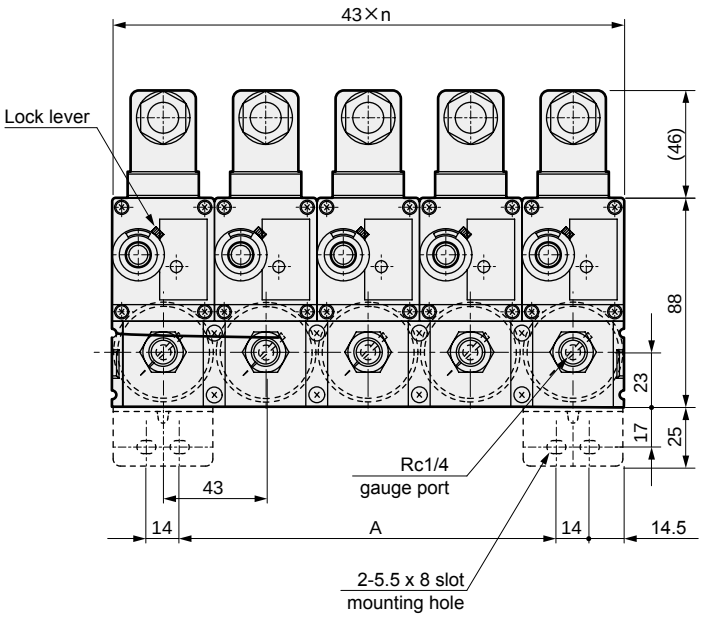

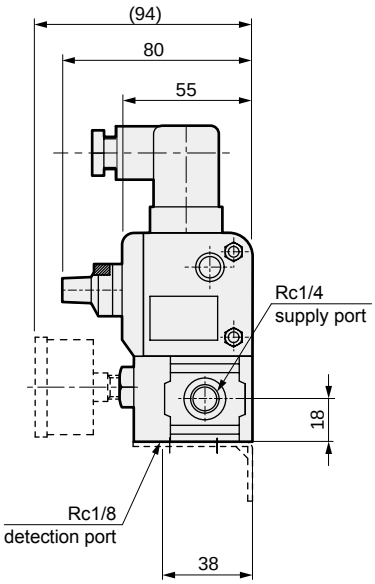

Station No.	n	A	Weight g
2 stations	2	29	680
3 stations	3	72	1030
4 stations	4	115	1370
5 stations	5	158	1710

*1: Bracket and pressure gauge (option) are not included.

● Manifold (connector: C*)

● MHPS-*-*** C0 C1 C3 C5

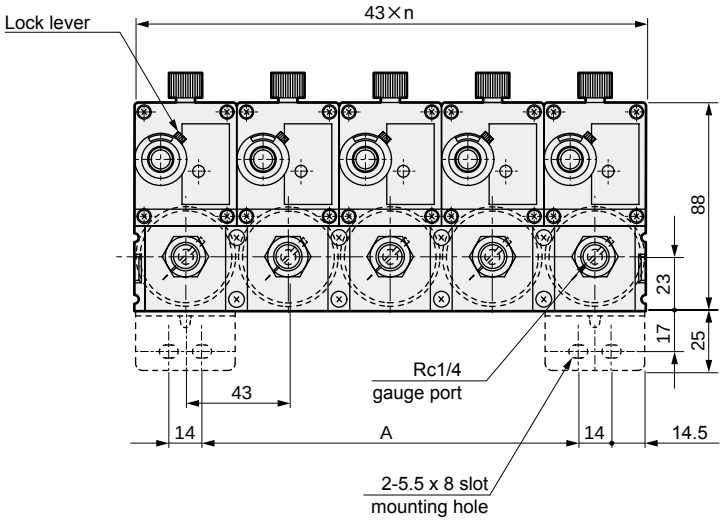

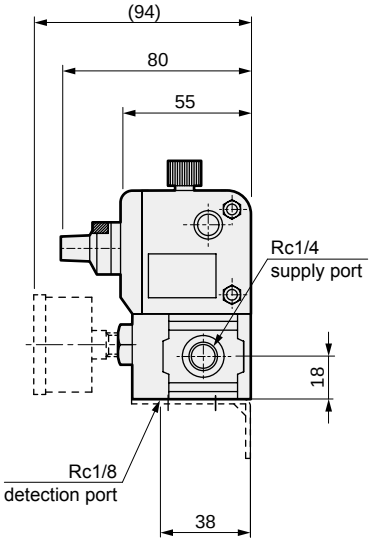

Station No.	n	A	Weight g (For C0)
2 stations	2	29	590
3 stations	3	72	890
4 stations	4	115	1190
5 stations	5	158	1490

*1: Bracket and pressure gauge (option) are not included.
*2: Cable for C1, C3, C5 is included.
(For the cable weight, refer to the option pages.)

Dimensions CAD

● Manifold (connector common terminal box: CTL/CTR)

● MHPS-*-*** CTL (CTR)

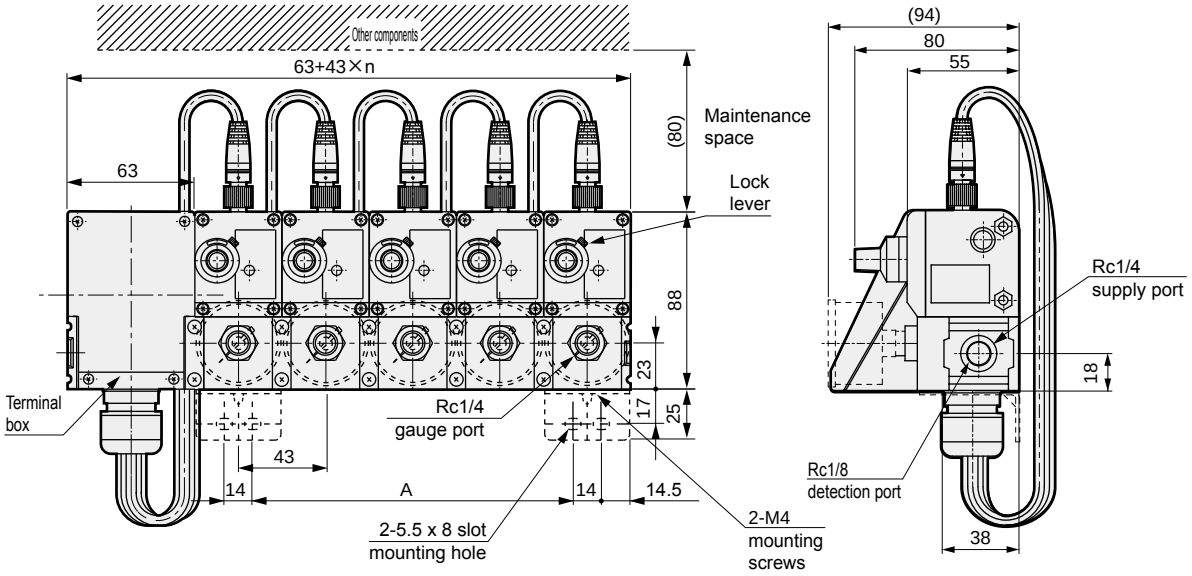

Station No.	n	A	Weight g
2 stations	2	29	930
3 stations	3	72	1270
4 stations	4	115	1620
5 stations	5	158	1980

* Bracket and pressure gauge (option) are not included.

● Manifold (lead wire common terminal box: TL/TR)

● MHPS-*-*** TL (TR)

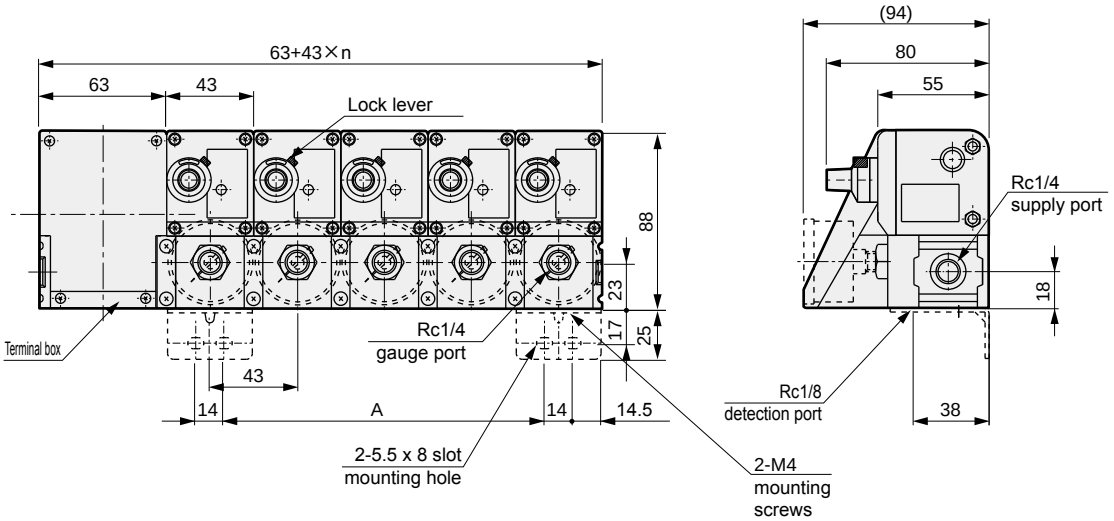

Station No.	n	A	Weight g
2 stations	2	29	830
3 stations	3	72	1140
4 stations	4	115	1460
5 stations	5	158	1770

* Bracket and pressure gauge (option) are not included.

● Refer to pages 1302 to 1307 for dimensions of options and peripheral devices.

MEMO

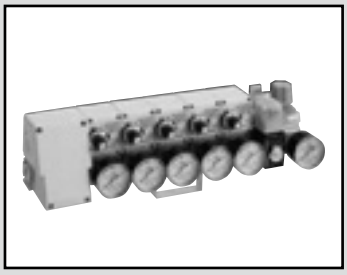

Close contact confirmation switch unit

UHPS Series

● Solenoid valve with needle, regulator integrated general purpose unit

Specifications

Basic specifications are the same as the single units on page 1276.

How to order

UHPS - 05 - 2 N G TL - B - GW2 - 2H - 1

- UHPS: Close contact confirmation switch
- Ⓐ Orifice size
- Ⓑ Station No.
- Ⓒ Output style
- Ⓓ Lamp color
- Ⓔ Electric connection option
- Ⓕ Bracket
- Ⓖ Pressure gauge
- Ⓗ Solenoid valve electric connection (*1)
- Ⓘ Solenoid valve voltage

Code	Description
Ⓐ Orifice size	
05	ø0.5
07	ø0.7
10	ø1.0
Ⓑ Station No.	
1	1 station
2	2 stations
3	3 stations
4	4 stations
5	5 stations
Ⓒ Output style	
N	NPN open collector
P	PNP open collector
Ⓓ Lamp color	
G	Green
Y	Yellow
Ⓔ Electric connection option	
F	DIN terminal box (Pg11)
C0	Connector (without cable)
C1	Connector (cable 1 m included)
C3	Connector (cable 3 m included)
C5	Connector (cable 5 m included)
CTL	Connector-common Term box Lt Assy
CTR	Connector-common Term box Rt Assy
TL	Lead wire common terminal box left assembly
TR	Lead wire common terminal box right assembly
Ⓕ Bracket	
B	With bracket
Ⓖ Pressure gauge	
Blank (*4)	None
GW2	Press gauge Assy, safety mark (G40D-8-P02-S501)
Ⓗ Solenoid valve electric connection	
2E	DIN terminal box
2H	DIN terminal box with light
3N	HP terminal box with light
Ⓘ Solenoid valve voltage	
1	100 VAC
2	200 VAC
3	24 VDC

⚠ Precautions for model No. selection

*1 : For CE-Marking-compatible parts, select the Ⓗ solenoid valve electric connection from 2E or 2H.
*2 : Refer to page 1287 for model No. of back pressure nozzles.
*3 : Refer to pages 1302 to 1307 for option and model No. of related components.
*4 : Regulator is also provided without pressure gauge.

Terminal box installation position relation diagram

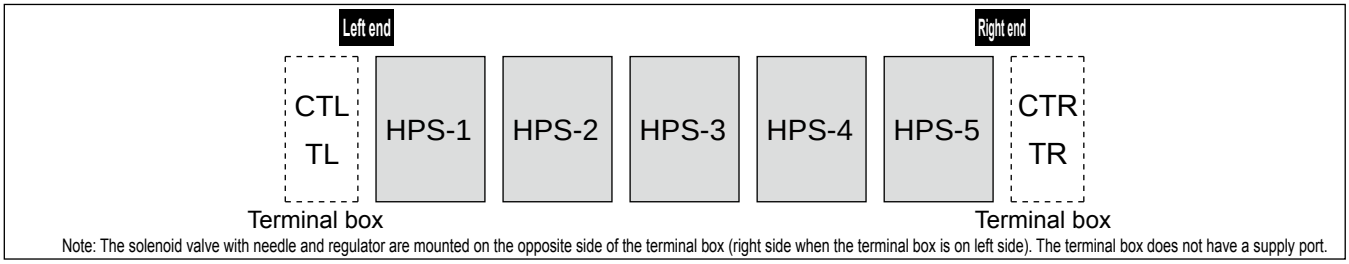

Note: The solenoid valve with needle and regulator are mounted on the opposite side of the terminal box (right side when the terminal box is on left side). The terminal box does not have a supply port.

Dimensions CAD

● Unit (DIN terminal box: F)

● UHPS-*-***F

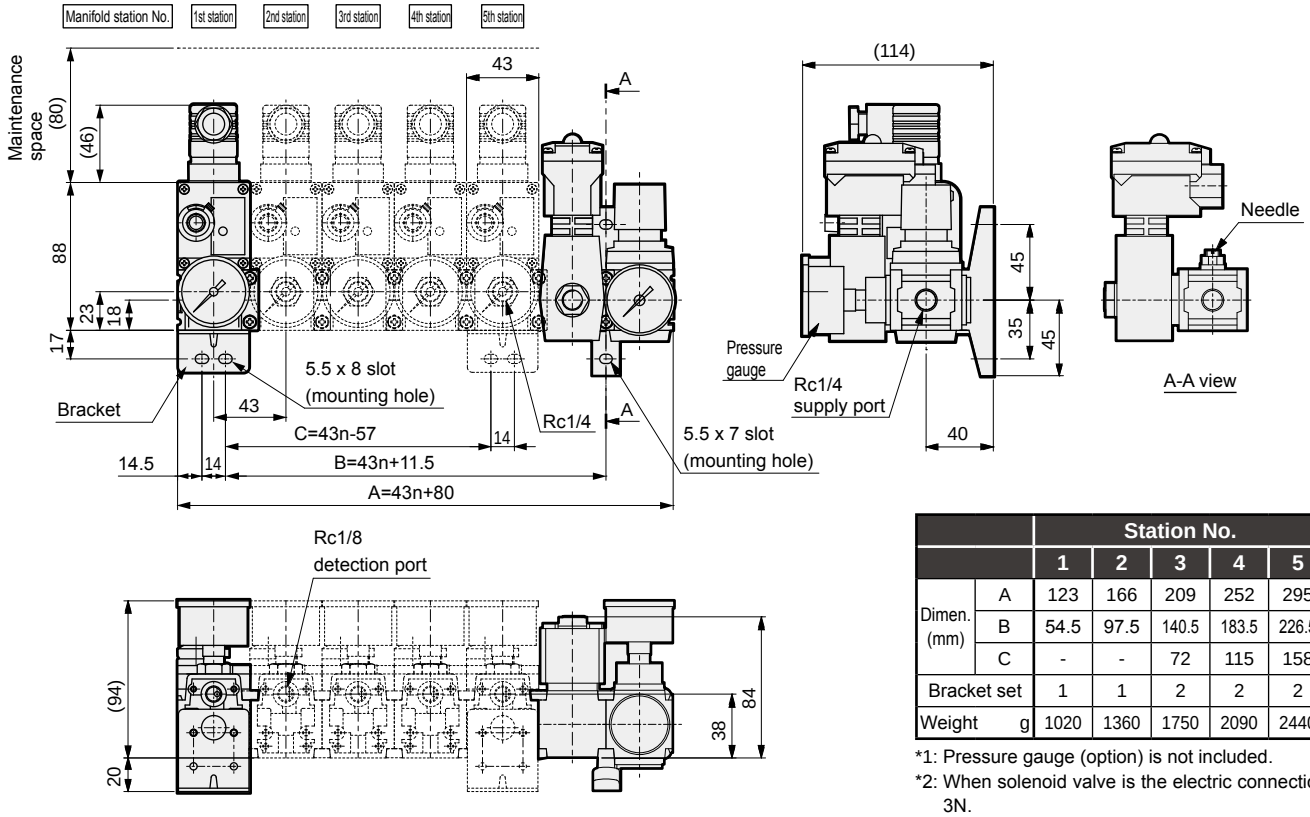

		Station No.				
		1	2	3	4	5
Dimen. (mm)	A	123	166	209	252	295
	B	54.5	97.5	140.5	183.5	226.5
	C	-	-	72	115	158
Bracket set		1	1	2	2	2
Weight g		1020	1360	1750	2090	2440

*1: Pressure gauge (option) is not included.
*2: When solenoid valve is the electric connection 3N.

● Unit (connector: C*)

C0
C1
C3
C5

● UHPS-*-***

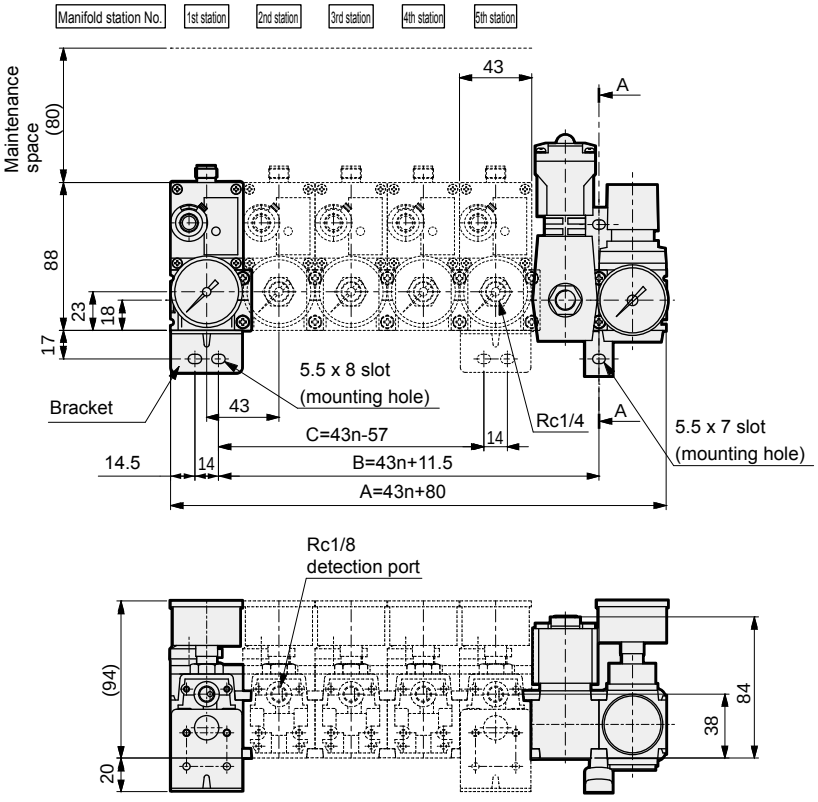

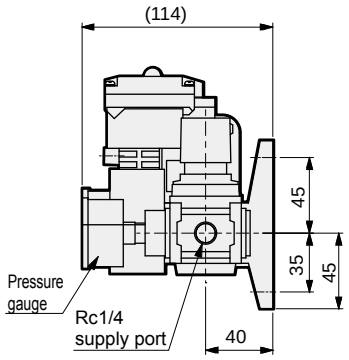

Note: Refer to the “A-A view” of the figure above for needle position.

		Station No.				
		1	2	3	4	5
Dimen. (mm)	A	123	166	209	252	295
	B	54.5	97.5	140.5	183.5	226.5
	C	-	-	72	115	158
Bracket set		1	1	2	2	2
Weight (For C0)g		970	1270	1620	1920	2220

*1: Pressure gauge (option) is not included.
*2: When solenoid valve is the electric connection 3N.
*3: Cable for C1, C3, C5 is included.
(For the cable weight, refer to the option pages.)

Dimensions CAD

● Unit (connector common terminal box: CTL/CTR)

● UHPS-*-*** CTL (CTR)

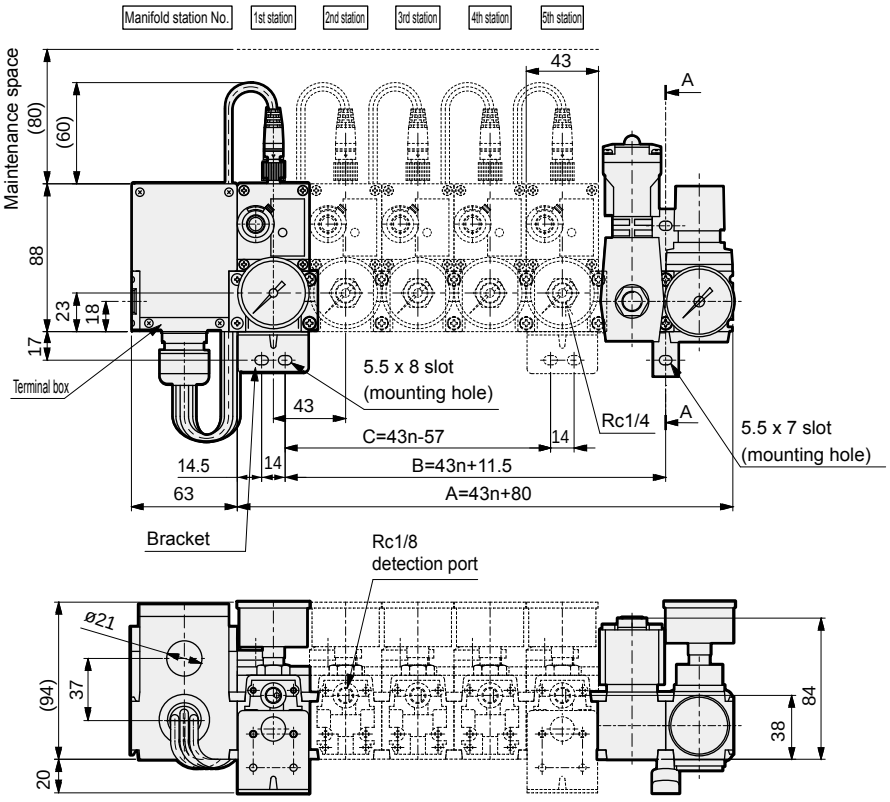

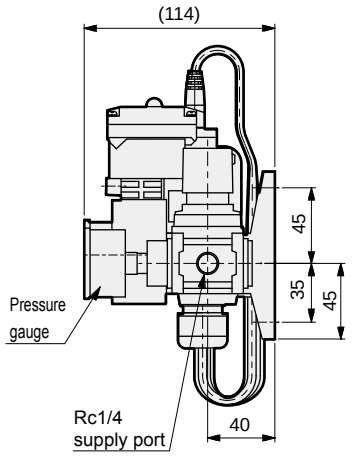

Note: Refer to the "A-A view" on the previous page for needle position.

		Station No.				
		1	2	3	4	5
Dimen. (mm)	A	123	166	209	252	295
	B	54.5	97.5	140.5	183.5	226.5
	C	-	-	72	115	158
Bracket set		1	1	2	2	2
Weight g		1260	1610	1990	2340	2700

*1: Pressure gauge (option) is not included.
*2: When solenoid valve is the electric connection 3N.

● Unit (lead wire common terminal box: TL/TR)

● UHPS-*-*** TL (TR)

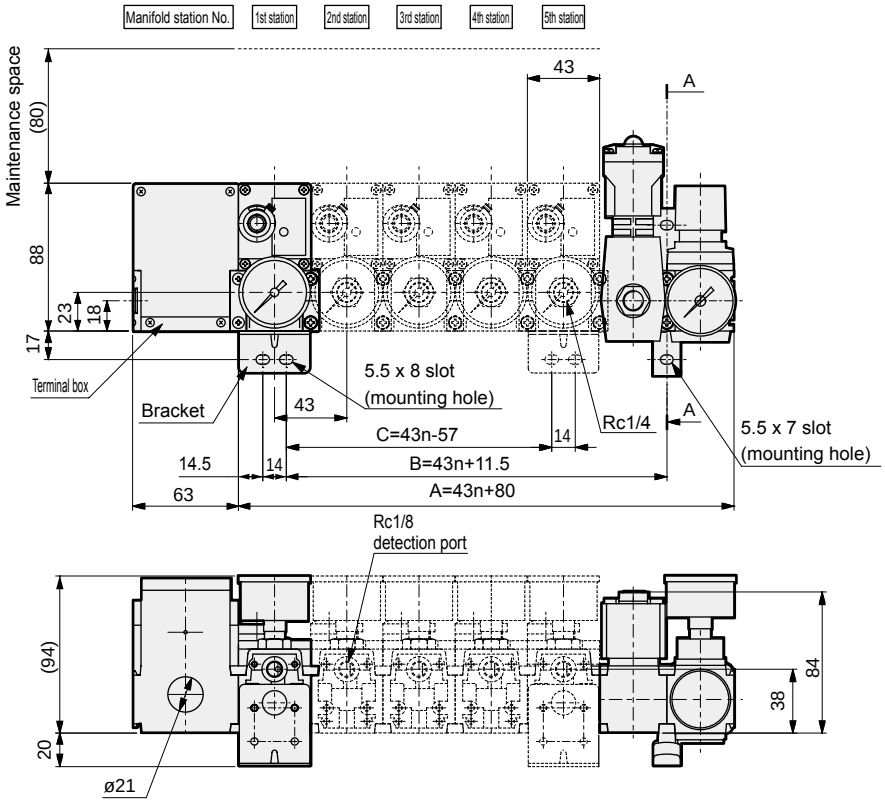

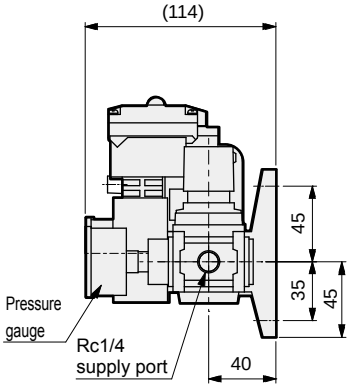

Note: Refer to the "A-A view" on the previous page for needle position.

		Station No.				
		1	2	3	4	5
Dimen. (mm)	A	123	166	209	252	295
	B	54.5	97.5	140.5	183.5	226.5
	C	-	-	72	115	158
Bracket set		1	1	2	2	2
Weight g		1190	1500	1860	2170	2490

*1: Pressure gauge (option) is not included.
*2: When solenoid valve is the electric connection 3N.

● Refer to pages 1302 to 1307 for dimensions of options and peripheral devices.

Optional nozzle

How to order

APA4 - DA 10

Code	Description
DA10	Outer diameter ø6, back pressure nozzle
DA20	Outer diameter M6 x P0.5, back pressure nozzle
DH10	Back pressure nozzle embedded

*1 : Combine optional nozzle with HPS-05.
*2 : Refer to page 1308 for the characteristics data.
*3 : When using HPS with standard specifications, use a single-hole nozzle the same as for the GPS2. (Refer to page 1273)

Dimensions

● Back pressure nozzle

· APA4-DA10

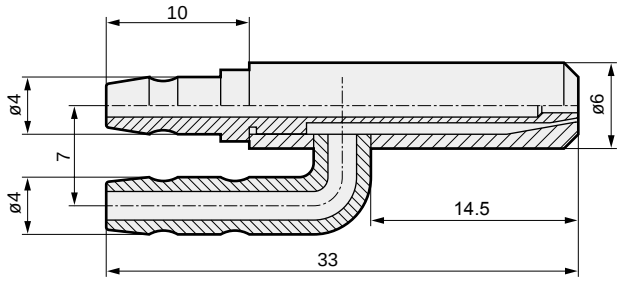

· Weight: 7g

APA4-DH10

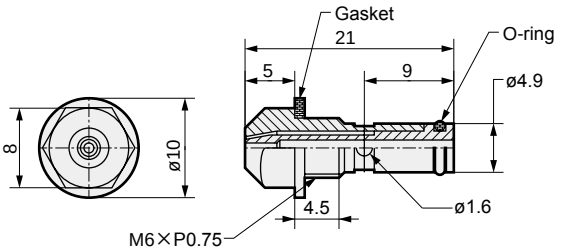

· Weight: 4g

· APA4-DA20

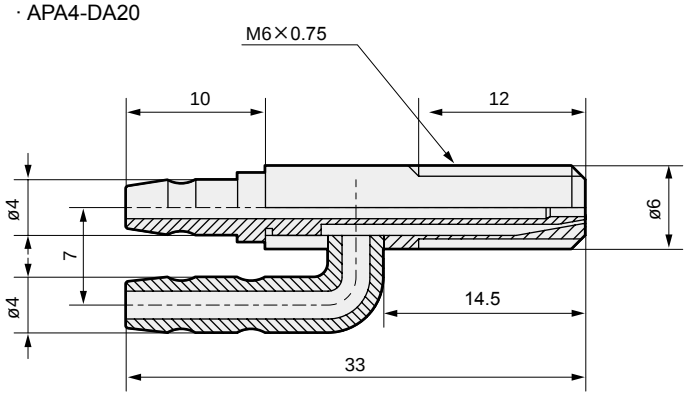

· Weight: 7g

● Example of embedding type jig design

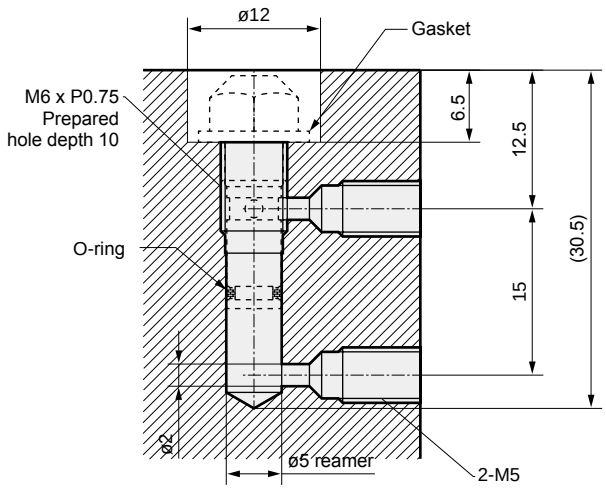

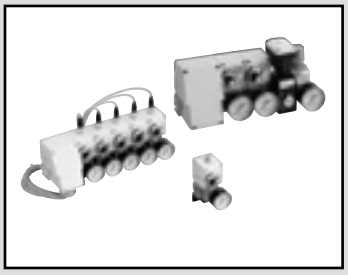

Cutting tool breakage detection switch

TLPS/MTLPS/UTLPS Series

RoHS

Overview

The cutting tool breakage detection switch TLPS Series is an air sensor used to detect broken or chipped drills and taps used in the metal machining line.
A dedicated nozzle unit is used for the detection nozzle to match the cutting tool. This switch is also usable in adverse environments, which is one of the features of the air sensor.

Features

- Shorter machining tact
  Since non-contact detection makes it possible to detect the state while the tool is rotating, tact time is shortened compared to conventional methods.
- Compatible with adverse environments
  Self-cleaning by the air nozzle enables use even in environments where coolant or swarf scatter.
- Small-diameter drill and cutting edge chipping detection
  Chips are detected on a ø0.3 small drill or 1 mm drill tip.
- Low air consumption
  This switch is used with low pressure so air consumption is reduced.
  (3 ℓ/min. (ANR) at 50 kPa)
- High stability
  Stable cutting tool breakage, unaffected by fluctuations in supply pressure, is detectable with the air bridge.
- Easy adjustment
  The highly accurate needle with lock mechanism and dial scale makes it possible to adjust the detecting position easily with no worry about deviation.
- Modularization
  Modularization makes it easy to connect to the CKD module connection component.

Example of cutting tool breakage detection applications

- Nozzle unit fixed

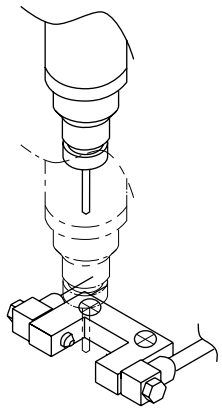

- Detecting nozzle moving type

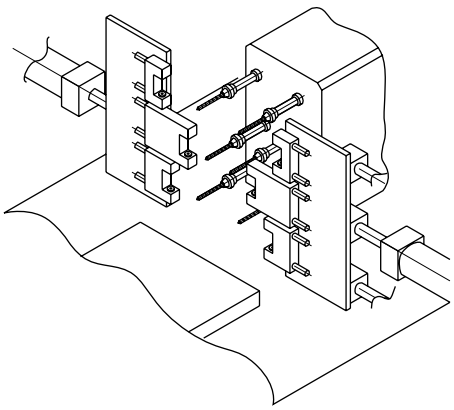

Operational explanation

● Diagram of TLPS (facing) principle

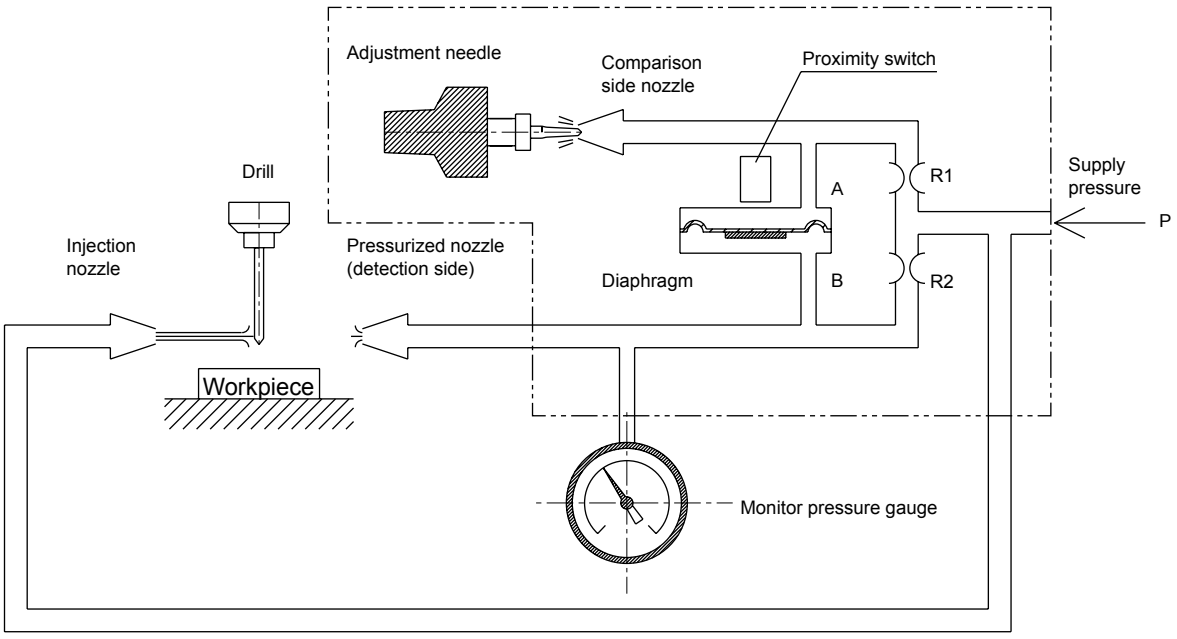

● Detecting nozzles

Two nozzles are used facing each other. A small amount of detection air is passed from the nozzle pressurized through the TLPS switch, and exhausted from nozzles. Conversely, air injected from the injection nozzle collides with detection air. When air collides, the back pressure of the nozzle pressurized rises, and the proximity switch in the TLPS switch is activated, generating an electrical signal. If there is a drill or other object between detecting nozzles, injection air is diffused and does not reach the nozzle pressurized, so the proximity switch in the TLPS is not activated.

● Cutting tool breakage detection switch

The difference of pressure when a drill is present and absent is amplified by the air bridge circuit. When expressed as a scale, the balance is the bridge. The air bridge circuit is a system which detects micro-fluctuations in pressure highly accurately. If the detection pressure with drill is P1, and the detection pressure without drill is P2,
Adjusted pressure = (P1 + P2) / 2.
If the drill is present, then P1 is smaller than the adjusted pressure and the diaphragm lowers. If the drill is absent, then P2 is greater than the adjusted pressure, so the diaphragm rises, the proximity switch is activated, and an electrical signal is generated.

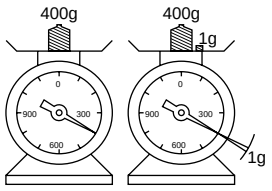

Spring scale

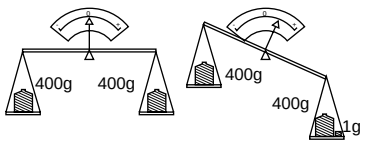

Balance

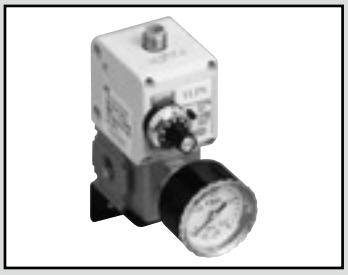

Cutting tool breakage detection switch, single unit

TLPS Series

Specifications

1 MPa = 10 bar

Item		TLPS-03		
Orifice size	mm	ø0.3		
Working pressure	(*2) kPa	50 (≈7.3 psi, 0.5 bar) to 200 (≈29 psi, 2 bar) (100 (≈15 psi, 1 bar) recommended)		
Detection cutting tool diameter	mm	ø0.3 to 30		
Power supply voltage	V	DC10.2 to 26.4		
Current consumption	mA	15 or less (when using 24 VDC)		
Output style		NPN, PNP open collector		
Output rating		30 VDC, 100 mA or less		
Internal voltage drop	V	2.0 or less (when using 100 mA)		
Indicator lamp and Signal	When drill is broken	Yellow lamp ON, output ON		
	When drill is normal	Yellow lamp OFF, output OFF		
Cutting edge detecting position		1mm and over from end of the edge		
Insulation resistance		10 MΩ and over at 500 VDC megger		
Withstand voltage		No failure impressed at 1000 VAC for one minute		
Vibration resistance	m/sec^2	98		
Ambient temperature	°C	5 (41°F) to 60 (140°F)		
Degree of protection	(*1)	IP67 equivalent (connector), IP64 equivalent (DIN terminal box)		
Connection tube	mm	Inner diameter 4		
Port size		Detection port Rc1/8, supply port Rc1/4, pressure gauge port Rc1/4		
Weight	g	300 (electric connection option C0)		
Air consumption ℓ/min (ANR) *Air consumption Value when CKD's standard nozzle is selected	Nozzle	TLPS-J0310	TLPS-J0510	TLPS-J0715
	50 kPa (≈7.3 psi)	2.8	4.8	6.6
	100 kPa (≈15 psi)	4.2	7.2	9.7
	200 kPa (≈29 psi)	6.6	11.1	15.1

*1: This product must be used under the following conditions:
(1) Piping and wiring must be completed and pressure applied.
(2) A waterproof bushing must be used on the wires to the terminal box.
*2: If the nozzle clogs, working pressure should be set between 100 and 200 kPa.

How to order

TLPS - 03 - N Y TL - B - GW2

- TLPS: Cutting tool breakage detection switch
- 03: Ⓐ Orifice size
- N: Ⓑ Output style
- Y: Ⓒ Light color
- TL: Ⓓ Electric connection option
- B: Ⓔ Bracket
- GW2: Ⓕ Pressure gauge

Code	Description
Ⓐ Orifice size	
03	For ø0.3 detecting nozzle
Ⓑ Output style	
N	NPN open collector
P	PNP open collector
Ⓒ Light color	
Y	Yellow
Ⓓ Electric connection option	
F	DIN terminal box (Pg11)
C0	Connector (without cable)
C1	Connector (cable 1 m included)
C3	Connector (cable 3 m included)
C5	Connector (cable 5 m included)
CTL	Connector common terminal box left assembly
CTR	Connector common terminal box right assembly
TL	Lead wire common terminal box left assembly
TR	Lead wire common terminal box right assembly
R	Lead wire direction right (left end for mounting)
L	Lead wire direction left (right end for mounting)
W	Lead wire direction both sides (intermediate for mounting)
Ⓔ Bracket	
Blank	Without bracket
B	With bracket
Ⓕ Pressure gauge	
Blank	No pressure gauge
G2	Pressure gauge with safety mark included (G40D-8-P02-S501)
GW2	Pressure gauge assembly with safety mark (G40D-8-P02-S501)

⚠ Precautions for model No. selection

*1: Refer to page 1301 for the model No. of the detecting nozzle.
*2: Refer to pages 1302 to 1307 for option and model No. of related components.

Internal structure and parts list

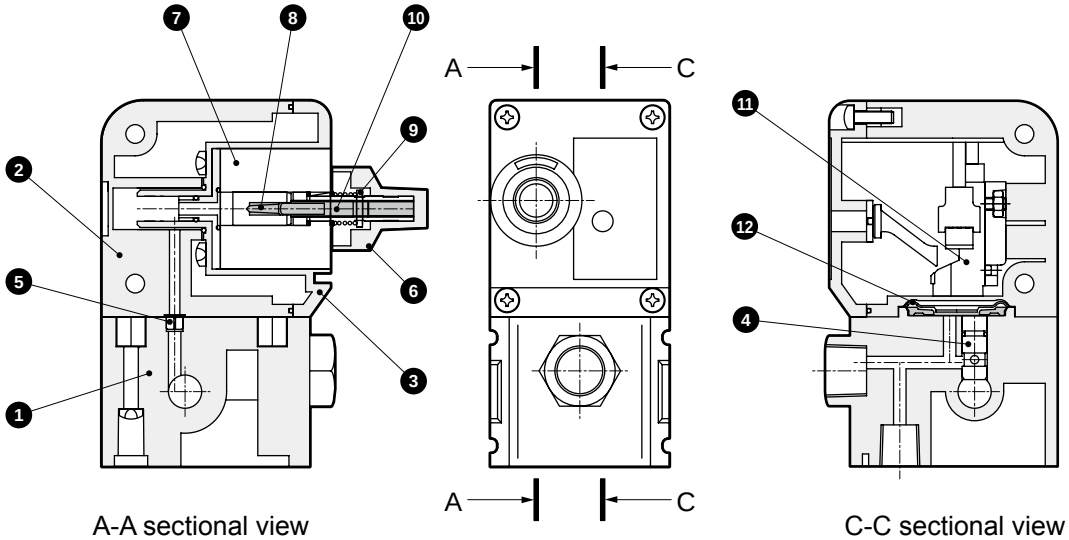

A-A sectional view

C-C sectional view

Parts list

No.	Part name	Material	No.	Part name	Material
1	Base	Aluminum	7	Needle holder	Aluminum
2	Body	Polybutylene terephthalate	8	Needle	Stainless steel
3	Front cover	Polybutylene terephthalate	9	Pin	Piano wire
4	Orifice nozzle A	Copper alloy	10	Needle shaft	Copper alloy
5	Orifice nozzle B	Copper alloy	11	Proximity switch	-
6	Dial	Aluminum alloy, polyamide, etc.	12	Diaphragm	HNBR

Dimensions CAD

R
L
W

● Basic TLPS-03-**

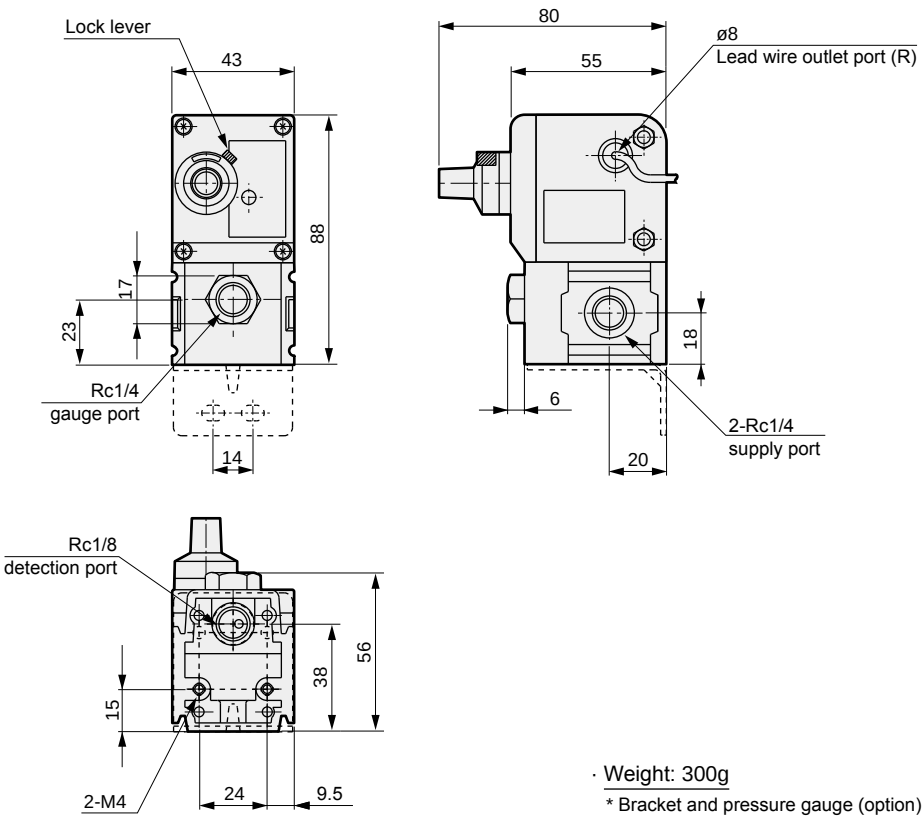

· Weight: 300g

* Bracket and pressure gauge (option) are not included.

● DIN terminal box TLPS-03-**F

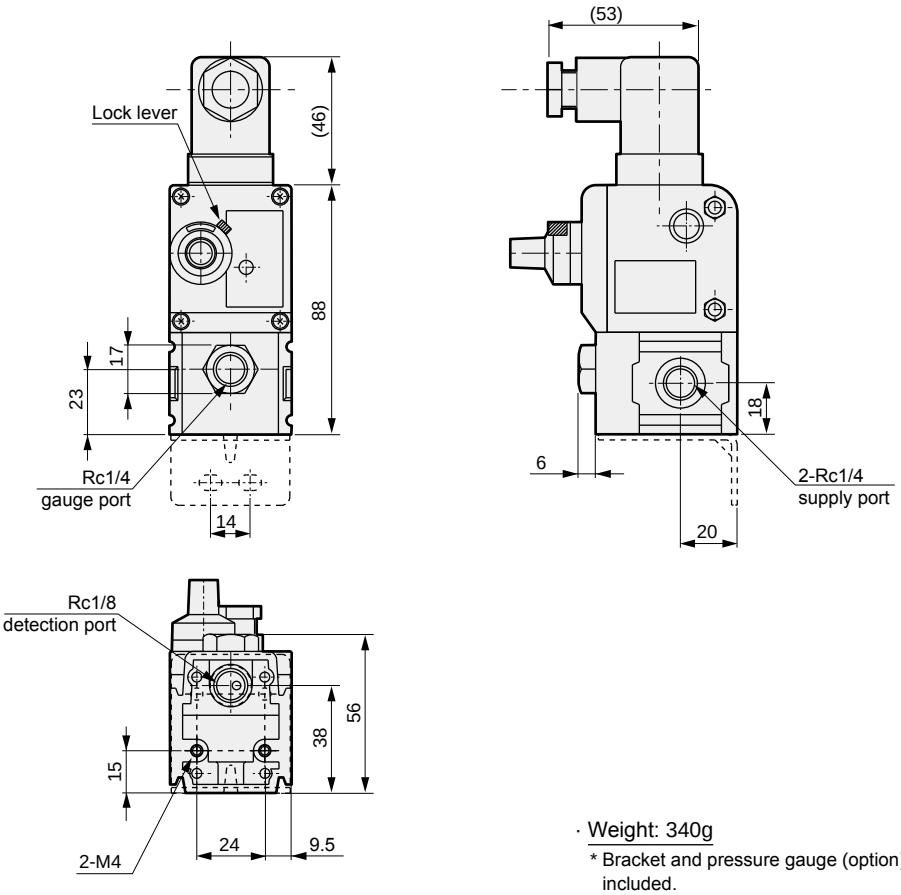

· Weight: 340g

* Bracket and pressure gauge (option) are not included.

Dimensions CAD

● Connector TLPS-03-** C0 C1 C3 C5

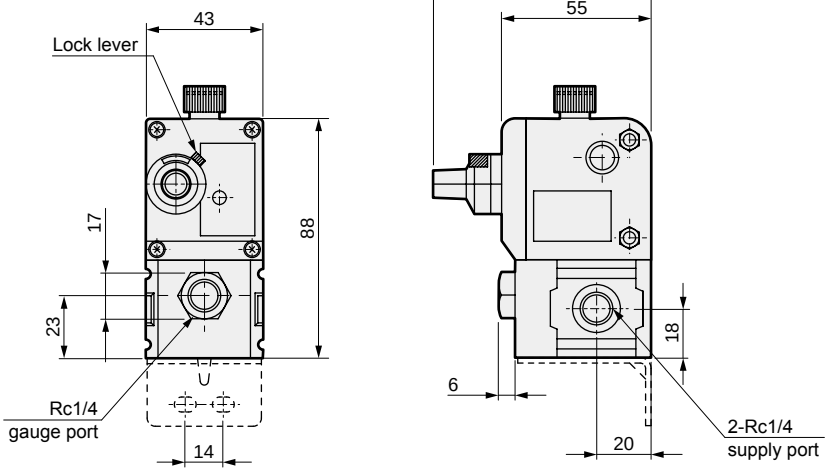

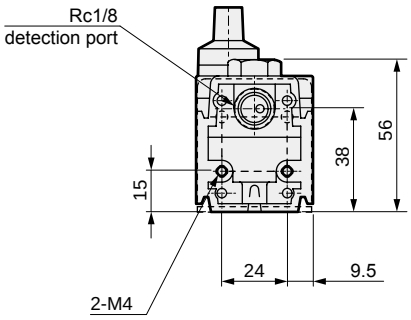

· Weight: 300g (for C0)

*1: Bracket and pressure gauge (option) are not included.
*2: Cable for C1, C3, C5 is included.
(For the cable weight, refer to the option pages.)

● Connector common terminal box TLPS-03-** CTL (CTR)

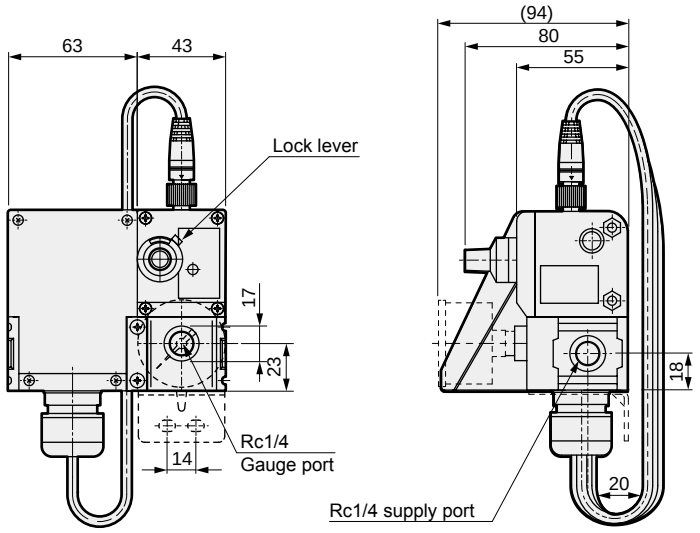

· Weight: 583g

* Bracket and pressure gauge (option) are not included.

● Lead wire common terminal box TLPS-03-** TL (TR)

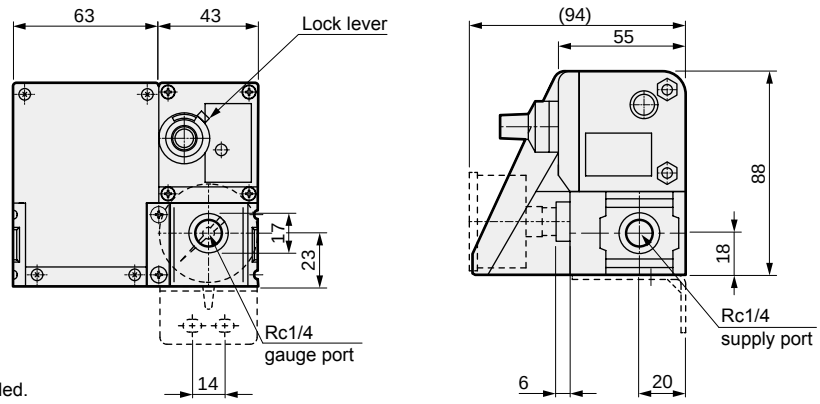

· Weight: 513g

* Bracket and pressure gauge (option) are not included.

● Refer to pages 1302 to 1307 for dimensions of options and peripheral devices.

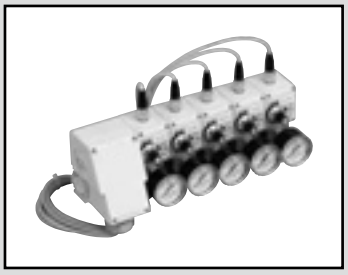

Cutting tool breakage detection switch/manifold

MTLPS Series

Specifications

Basic specifications are the same as the single units on page 1290.

How to order

MTLPS - 03 - 2 N Y TL - B - GW2

- MTLPS: Cutting tool breakage detection switch
- Ⓐ 03: Orifice size
- Ⓑ 2: Station No.
- Ⓒ N: Output style
- Ⓓ Y: Lamp color
- Ⓔ TL: Electric connection option
- Ⓕ B: Bracket
- Ⓖ GW2: Pressure gauge

Code	Description
Ⓐ Orifice size	
03	For ø0.3 detecting nozzle
Ⓑ Station No.	
2	2 stations
3	3 stations
4	4 stations
5	5 stations
Ⓒ Output style	
N	NPN open collector
P	PNP open collector
Ⓓ Lamp color	
Y	Yellow
Ⓔ Electric connection option	
F	DIN terminal box (Pg11)
C0	Connector (without cable)
C1	Connector (cable 1 m included)
C3	Connector (cable 3 m included)
C5	Connector (cable 5 m included)
CTL	Connector common terminal box left assembly
CTR	Connector common terminal box right assembly
TL	Lead wire common terminal box left assembly
TR	Lead wire common terminal box right assembly
T1	Lead wire common terminal box intermediate assembly (1st from left)
T2	Lead wire common terminal box intermediate assembly (2nd from left)
T3	Lead wire common terminal box intermediate assembly (3rd from left)
T4	Lead wire common terminal box intermediate assembly (4th from left)
Ⓕ Bracket	
Blank	Without bracket
B	With bracket
Ⓖ Pressure gauge	
Blank	No pressure gauge
G2	Pressure gauge with safety mark included (G40D-8-P02-S501)
GW2	Pressure gauge assembly with safety mark (G40D-8-P02-S501)

⚠ Precautions for model No. selection

*1: Refer to page 1301 for the model No. of the detecting nozzle.
*2: Refer to pages 1302 to 1307 for option and model No. of related components.

Degree of protection

Electric connection option	Degree of protection
T*	IP66 equivalent
CT*	IP67 equivalent
F*	IP64 equivalent
C*	IP67 equivalent

Note: This product must be used under the following conditions.
(1) Piping and wiring must be completed and pressure applied.
(2) A waterproof bushing must be used on the wires to the terminal box.

Terminal box installation position relation diagram

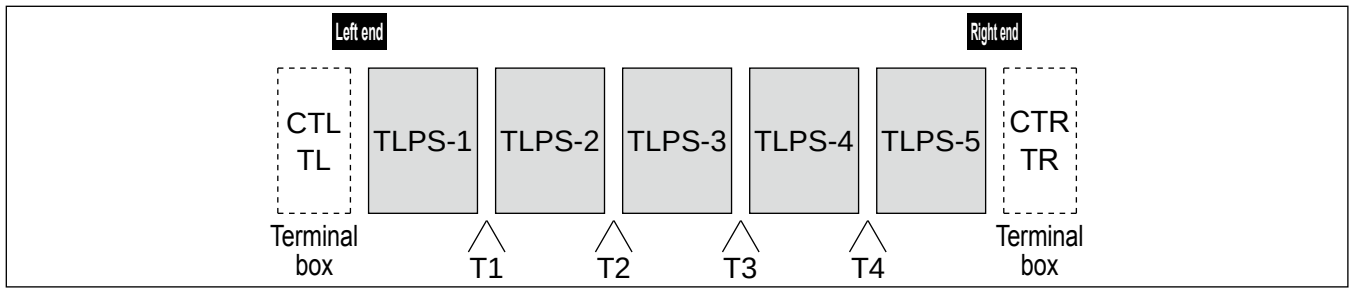

Dimensions CAD

● Manifold (DIN terminal box: F)

● MTLPS-03-*** F

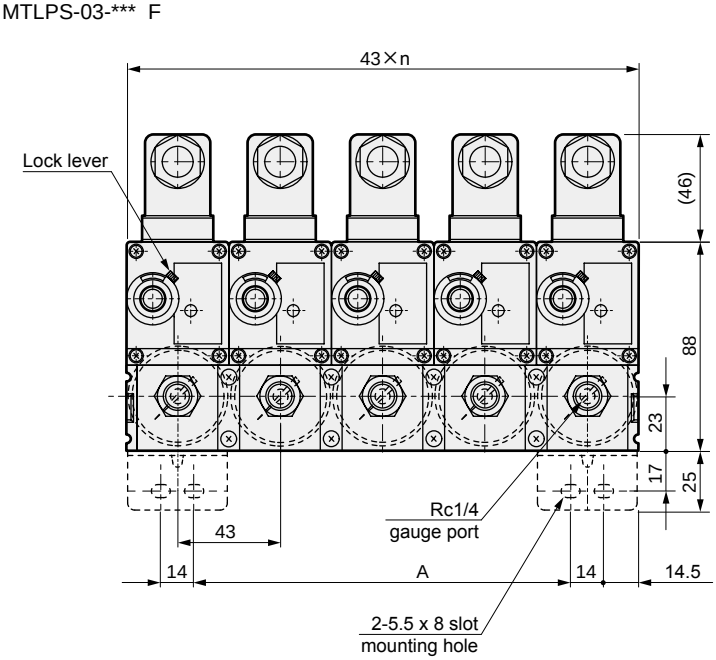

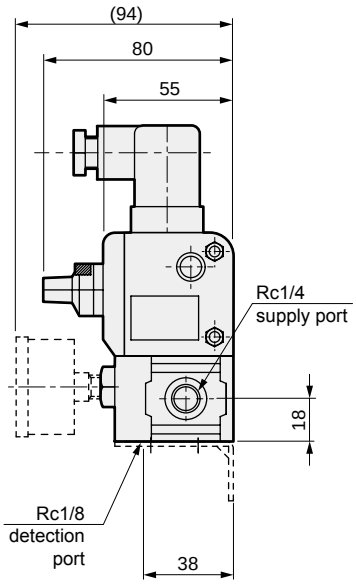

Station No.	n	A	Weight g
2 stations	2	29	680
3 stations	3	72	1030
4 stations	4	115	1370
5 stations	5	158	1710

* Bracket and pressure gauge (option) are not included.

● Manifold (connector: C*)

● MTLPS-03-*** C0 C1 C3 C5

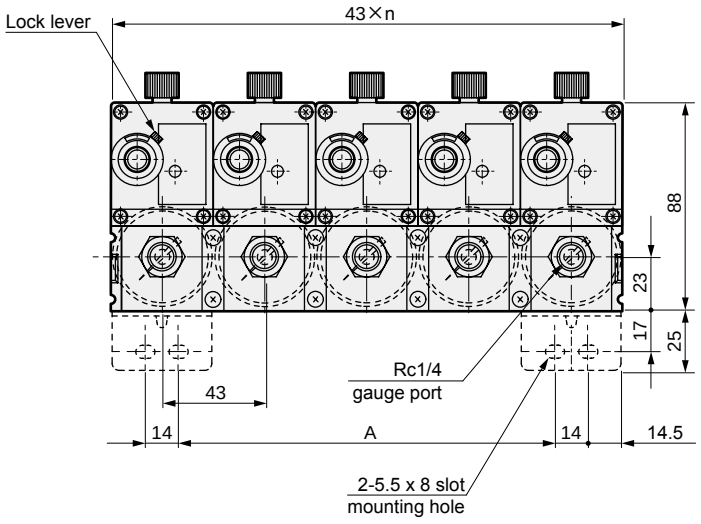

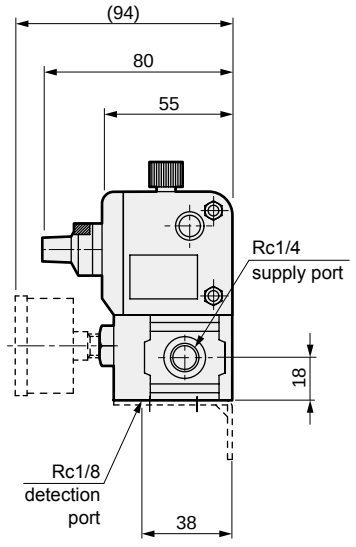

Station No.	n	A	Weight g
2 stations	2	29	590
3 stations	3	72	890
4 stations	4	115	1190
5 stations	5	158	1490

(For C0)

*1: Bracket and pressure gauge (option) are not included.
*2: Cable for C1, C3, C5 is included.
(For the cable weight, refer to the option pages.)

Dimensions CAD

● Manifold (connector common terminal box: CTL/CTR)

● MTLPS-03-*** CTL (CTR)

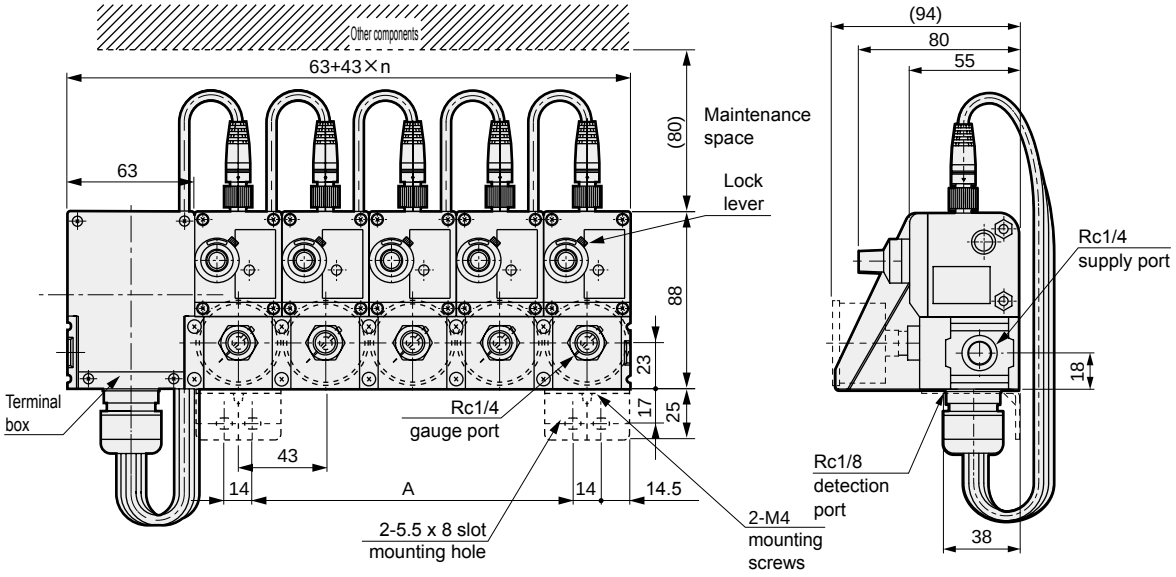

Station No.	n	A	Weight g
2 stations	2	29	930
3 stations	3	72	1270
4 stations	4	115	1620
5 stations	5	158	1980

*1: Bracket and pressure gauge (option) are not included.

● Manifold (lead wire common terminal box: TL/TR)

● MTLPS-03-*** TL (TR)

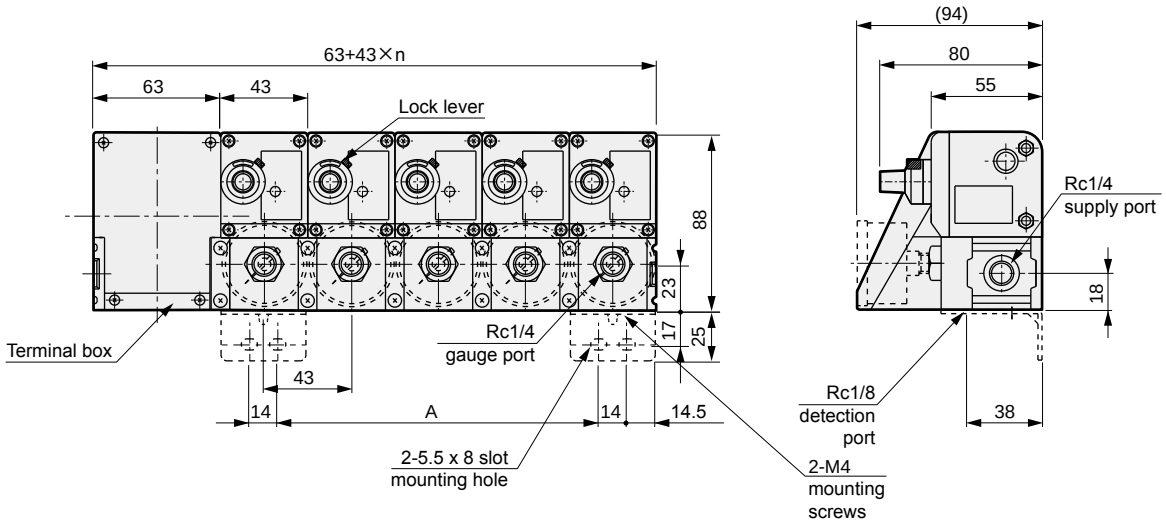

Station No.	n	A	Weight g
2 stations	2	29	830
3 stations	3	72	1140
4 stations	4	115	1460
5 stations	5	158	1770

*1: Bracket and pressure gauge (option) are not included.

● Refer to pages 1302 to 1307 for dimensions of options and peripheral devices.

MEMO

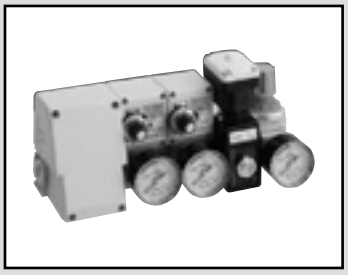

Cutting tool breakage detection switch unit

UTLPS Series

● Solenoid valve with needle, regulator integrated general purpose unit

Specifications

Basic specifications are the same as the single units on page 1290.

How to order

UTLPS - 03 - 2 N Y TL - B - GW2 - 3H - 1

- UTLPS: Cutting tool breakage detection switch
- Ⓐ 03: Orifice size
- Ⓑ 2: Station No.
- Ⓒ N: Output style
- Ⓓ Y: Lamp color
- Ⓔ TL: Electric connection option
- Ⓕ B: Bracket
- Ⓖ GW2: Pressure gauge
- Ⓗ 3H: Solenoid valve electric connection (*3)
- Ⓘ 1: Solenoid valve voltage

Code	Description
Ⓐ Orifice size	
03	For ø0.3 detecting nozzle
Ⓑ Station No.	
1	1 station
2	2 stations
3	3 stations
4	4 stations
5	5 stations
Ⓒ Output style	
N	NPN open collector
P	PNP open collector
Ⓓ Lamp color	
Y	Yellow
Ⓔ Electric connection option	
F	DIN terminal box (Pg11)
C0	Connector (without cable)
C1	Connector (cable 1 m included)
C3	Connector (cable 3 m included)
C5	Connector (cable 5 m included)
CTL	Connector common terminal box left assembly
CTR	Connector-common Term box Rt Assy
TL	Lead wire common terminal box left assembly
TR	Lead wire common terminal box right assembly
Ⓕ Bracket	
B	With bracket
Ⓖ Pressure gauge	
Blank (*4)	None
GW2	Press gauge Assy, safety mark (G40D-8-P02-S501)
Ⓗ Solenoid valve electric connection	
2E	DIN terminal box
2H	DIN terminal box with lamp
3N	HP terminal box with lamp
Ⓘ Solenoid valve voltage	
1	100 VAC
2	200 VAC
3	24 VDC

⚠ Precautions for model No. selection

*1 : Refer to page 1301 for the model No. of the detecting nozzle.
*2 : Refer to pages 1302 to 1307 for option and model No. of related components.
*3 : For CE-Marking-compatible parts, select the Ⓗ solenoid valve electric connection from 2E or 2H.
*4 : Regulator is also provided without pressure gauge.

Terminal box installation position relation diagram

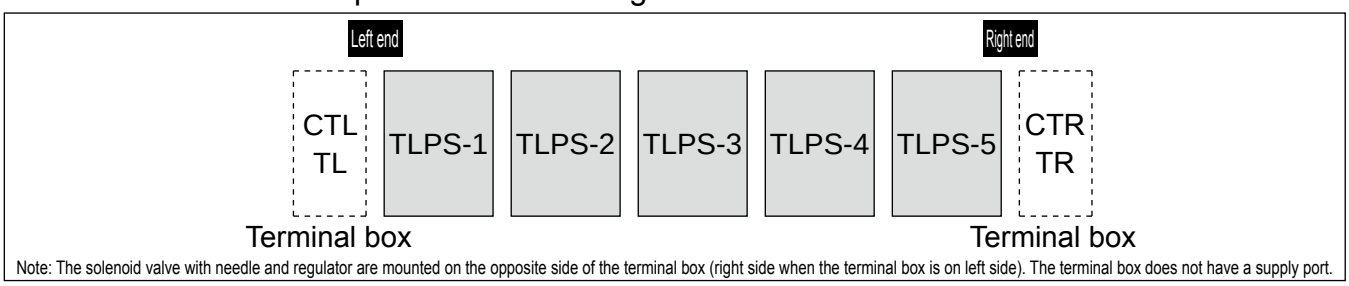

Note: The solenoid valve with needle and regulator are mounted on the opposite side of the terminal box (right side when the terminal box is on left side). The terminal box does not have a supply port.

Dimensions CAD

● Unit (DIN terminal box: F)

● UTLPS-03-*** F

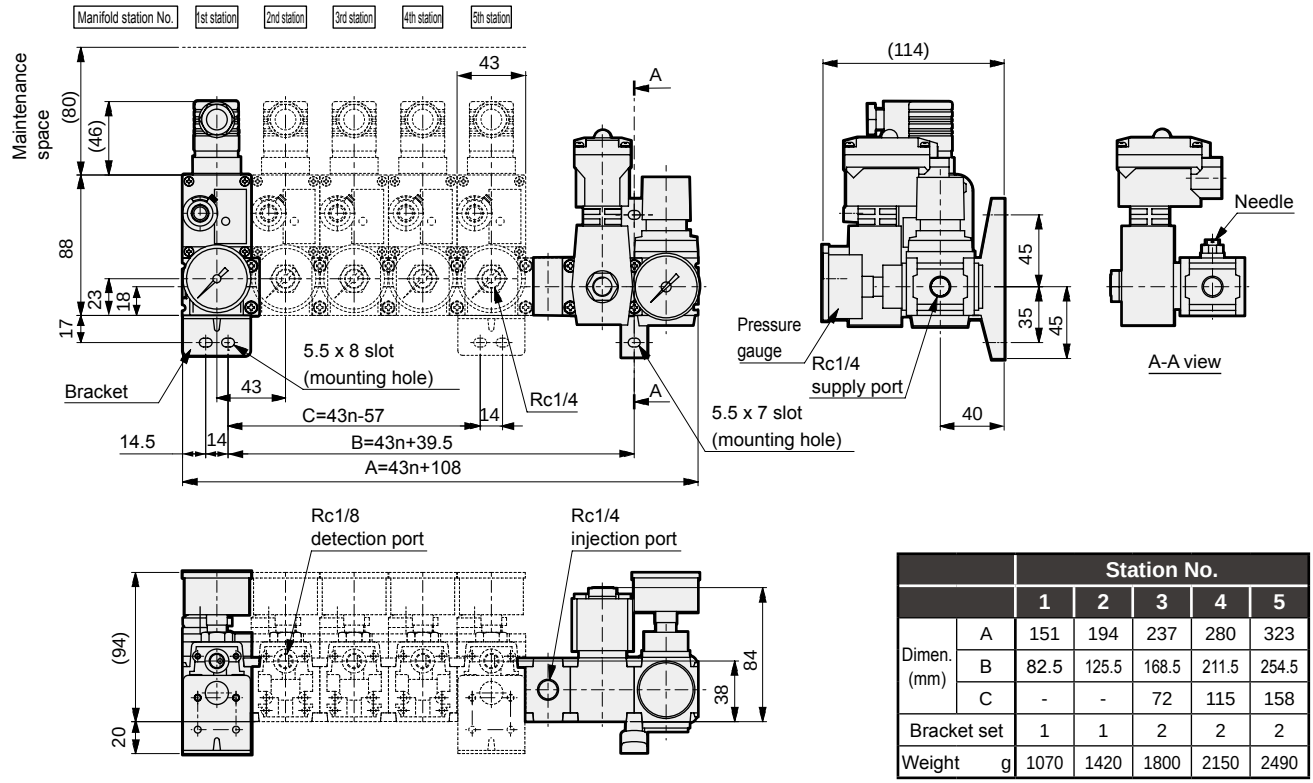

		Station No.				
		1	2	3	4	5
Dimen. (mm)	A	151	194	237	280	323
	B	82.5	125.5	168.5	211.5	254.5
	C	-	-	72	115	158
Bracket set		1	1	2	2	2
Weight g		1070	1420	1800	2150	2490

*1: Pressure gauge (option) is not included.
*2: When solenoid valve is the electric connection 3N.

● Unit (connector: C*)
C0
C1
C3
C5

● UTLPS-03-***

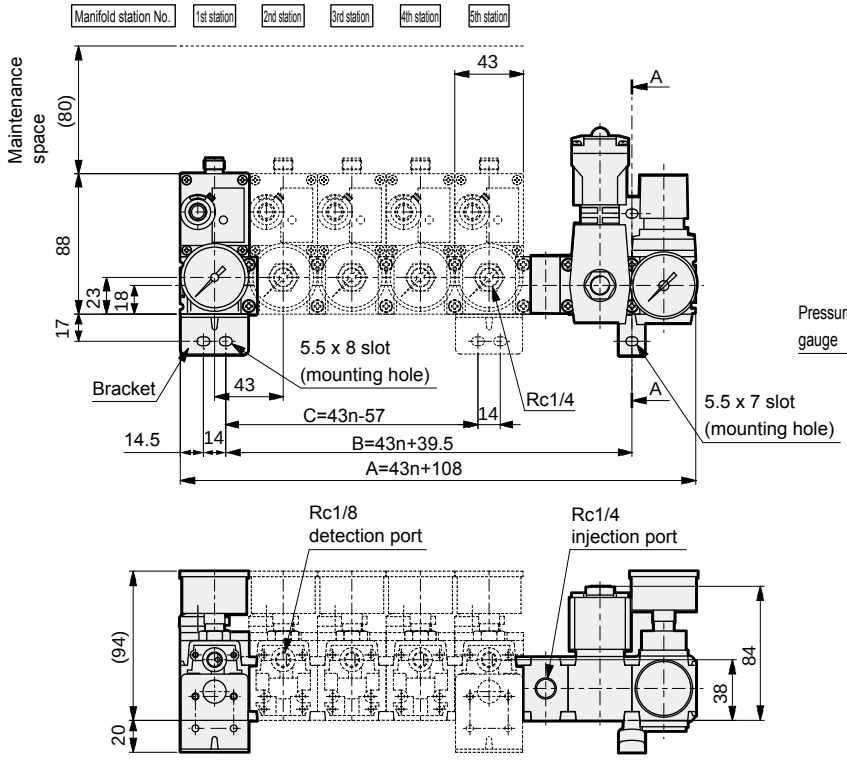

Note: Refer to the "A-A view" of the figure above for needle position.

		Station No.				
		1	2	3	4	5
Dimen. (mm)	A	151	194	237	280	323
	B	82.5	125.5	168.5	211.5	254.5
	C	-	-	72	115	158
Bracket set		1	1	2	2	2
Weight (For C0) g		1030	1330	1670	1970	2270

*1: Pressure gauge (option) is not included.
*2: When solenoid valve is the electric connection 3N.
*3: Cable for C1, C3, C5 is included. (For the cable weight, refer to the option pages.)

Dimensions CAD

● Unit (connector common terminal box: CTL/CTR)

● UTLPS-03-*** CTL (CTR)

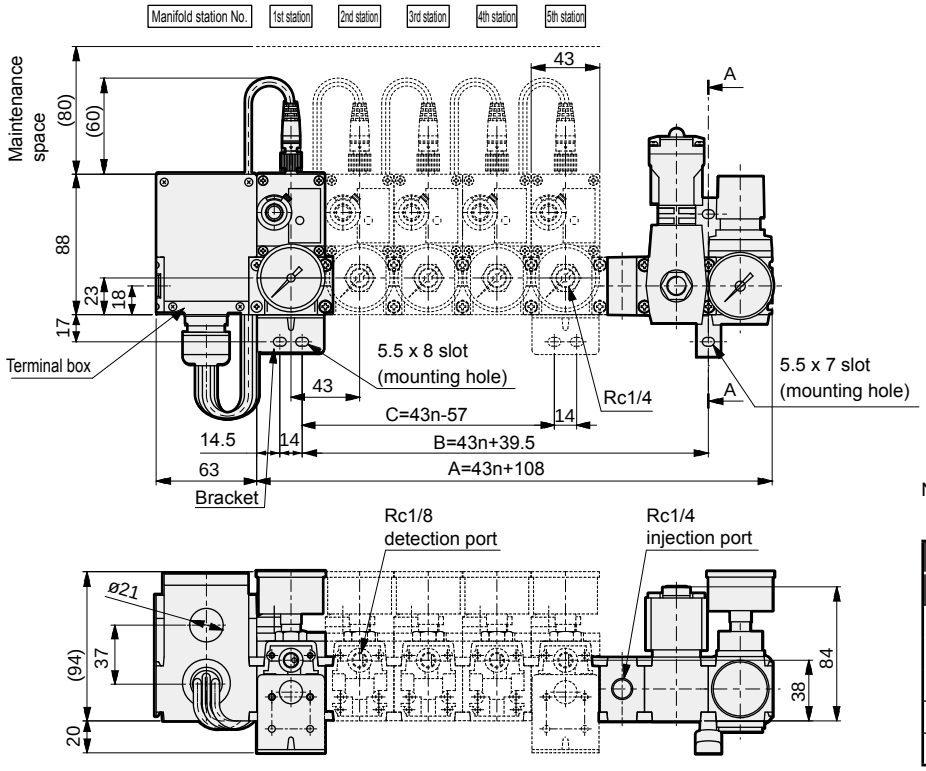

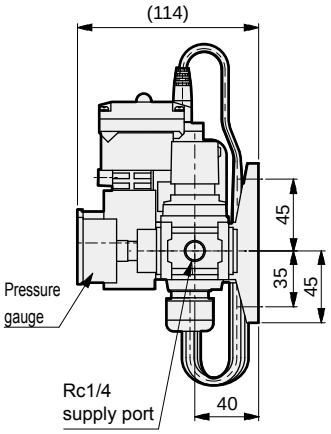

Note: Refer to the "A-A view" on the previous page for needle position.

		Station No.				
		1	2	3	4	5
Dimen. (mm)	A	151	194	237	280	323
	B	82.5	125.5	168.5	211.5	254.5
	C	-	-	72	115	158
Bracket set		1	1	2	2	2
Weight g		1320	1660	2050	2400	2750

*1: Pressure gauge (option) is not included.
*2: When solenoid valve is the electric connection 3N.

● Unit (lead wire common terminal box: TL/TR)

● UTLPS-03-*** TL (TR)

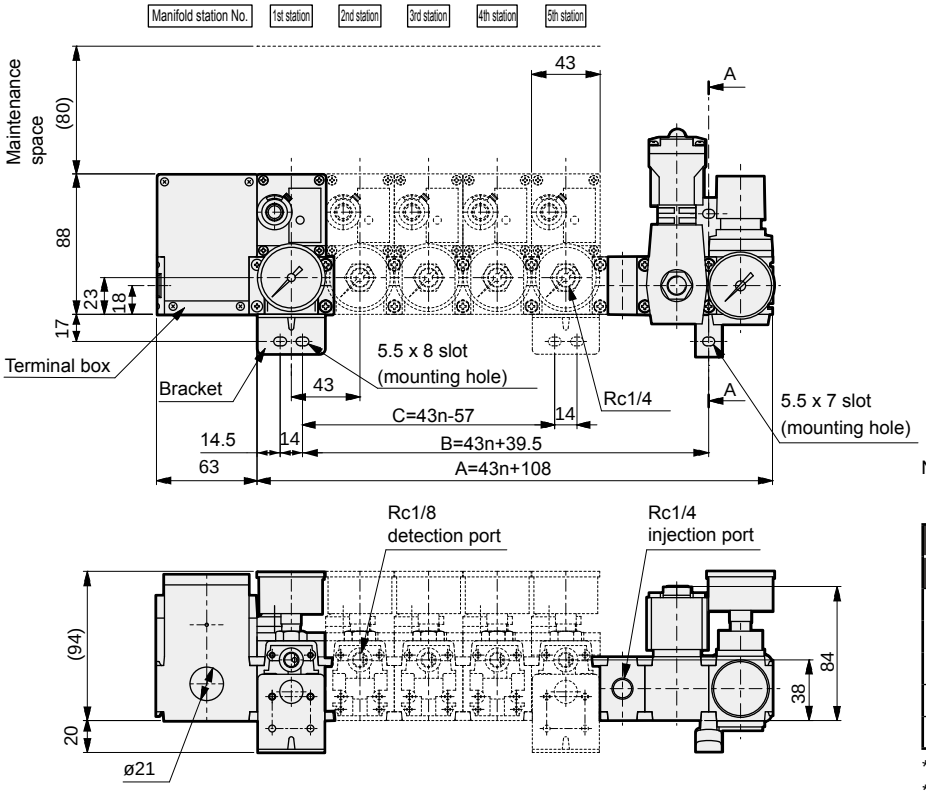

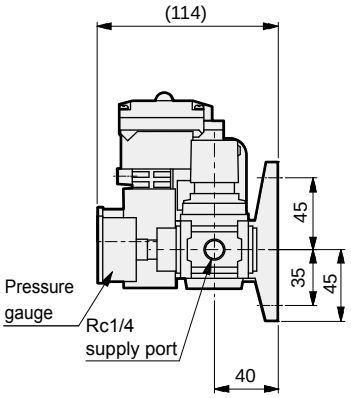

Note: Refer to the "A-A view" on the previous page for needle position.

		Station No.				
		1	2	3	4	5
Dimen. (mm)	A	151	194	237	280	323
	B	82.5	125.5	168.5	211.5	254.5
	C	-	-	72	115	158
Bracket set		1	1	2	2	2
Weight g		1250	1560	1920	2230	2540

*1: Pressure gauge (option) is not included.
*2: When solenoid valve is the electric connection 3N.

● Refer to pages 1302 to 1307 for dimensions of options and peripheral devices.

Detecting nozzle

Specifications

Item		TLPS-J0310	TLPS-J0510	TLPS-J0715
Applicable drill diameter	mm	ø0.3 to 3	ø1 to 10	ø3 to 30
Distance between nozzles	mm	5	12	32
Guide to dial value (needle position)	(times)	1.8 to 2.2	2.3 to 2.7	5.3 to 5.7

*1: The table above shows reference values when supply pressure is 0.1 MPa and pipe length is 5 m.
*2: Contact CKD for custom-made nozzle and multi spindle.
*3: Jet nozzle is indicated as A, and pressurizing nozzle is indicated as B.
*4: Pipe the injection nozzle (A side) to the supply source (injection port for units) and the pressurized nozzle (B side) to the TLPS detection port.

How to order

TLPS - **J** **0310**

Code	Description	
	Inject nozzle ø (A side)	Nozzle press ø (B side)
0310	ø0.3	ø1.0
0510	ø0.5	ø1.0
0715	ø0.7	ø1.5

Dimensions CAD

● J0310

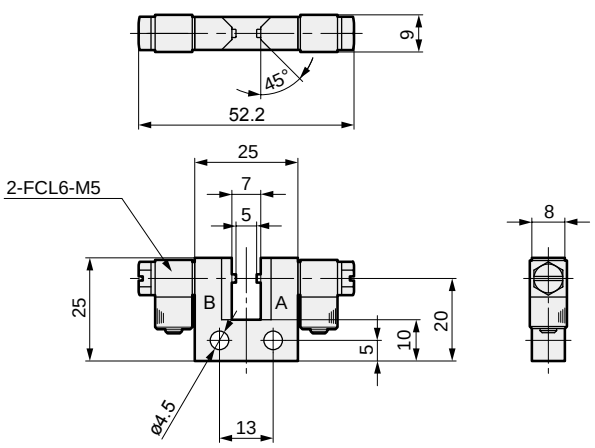

Weight: 30g

● J0510

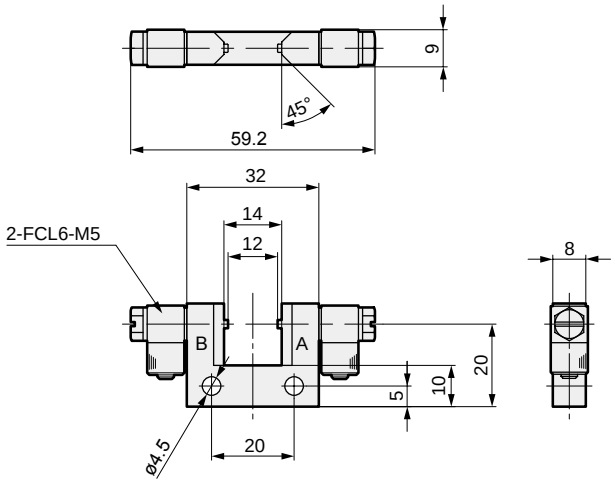

Weight: 31g

● J0715

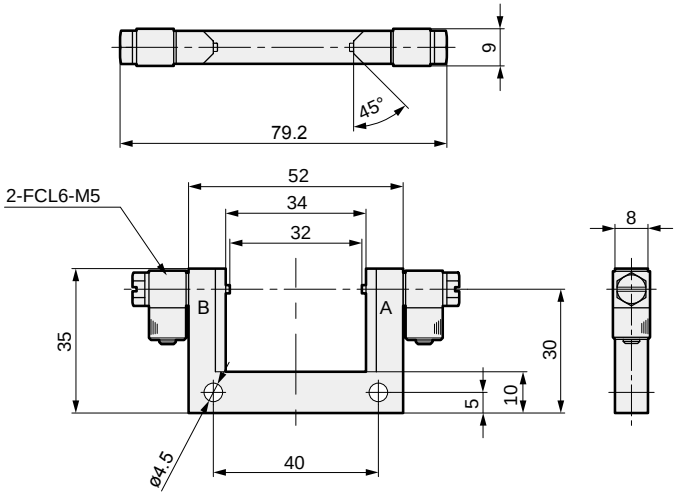

Weight: 39g

Option

How to order

Dimensions

CAD

● How to order connector cable

GPS2 - C1

Ⓐ Cable length

Ⓐ		
	C1	1 m
	C3	3 m
	C5	5 m

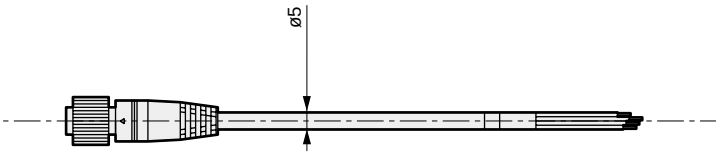

Code	Weight g
C1	45
C3	123
C5	195

Lead wire color	Applications
Brown	Power supply +
White	NC
Blue	Power supply -
Black	Output

● How to order terminal box

GPS2 - CTL

Ⓐ Terminal box

Ⓐ		
	CTL	For connector common terminal box left assembly
	CTR	For connector common terminal box right assembly
	TL	For lead wire common terminal box left assembly
	TR	For lead wire common terminal box right assembly
	TW	Lead wire common term box interm Assy

Code	Weight g
CTL,CTR	234 (for up to 4 stations) 245 (for 5 stations)
TL,TR,TW	207

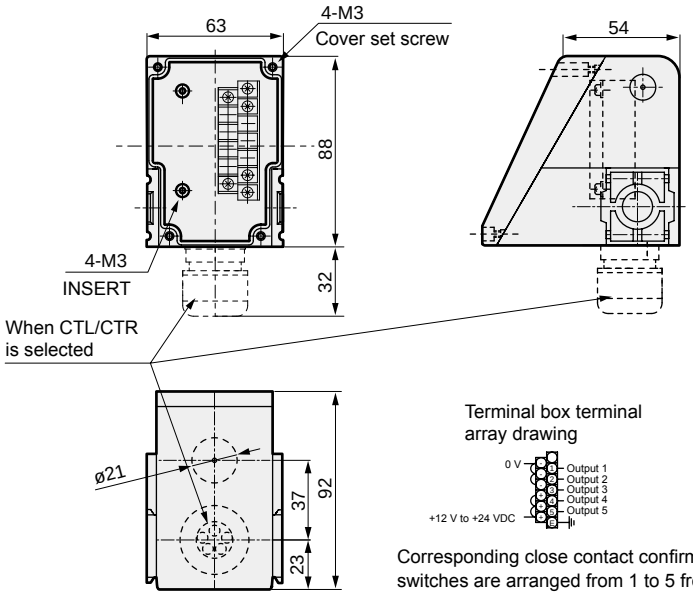

Terminal box terminal array drawing

Corresponding close contact confirmation switches are arranged from 1 to 5 from the left as seen from the front.

● How to order pressure gauge with safety mark

GPS2 - G40D - 8 - P02 - S501

Ⓐ Model No.
Ⓑ Port size
Ⓒ Pressure display

Ⓐ		
	G40D	Pressure gauge with safety mark
Ⓑ	**8**	R1/4
Ⓒ	**P02**	0 to 0.2 MPa
	P04	0 to 0.4 MPa
	P10	0 to 1.0 MPa

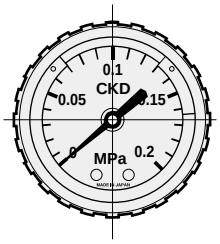

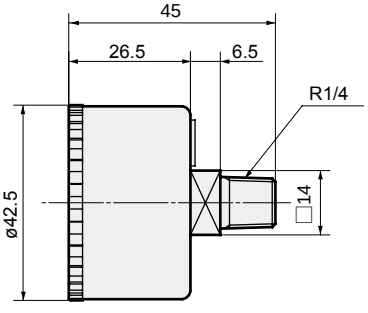

Weight: 85g

* 1. Safety zone setting range: 0.03 to 0.2 MPa
* 2. Safety zone setting max. range: 0.09 MPa
* 3. Gauge accuracy: JIS B 7505, old class 3.0
* 4. Cover material: Transparent nylon

Option

How to order

● How to order L type bracket

GPS2 - B

· Weight: 41g
· Material: Cast iron
Trivalent chromate treatment

Dimensions

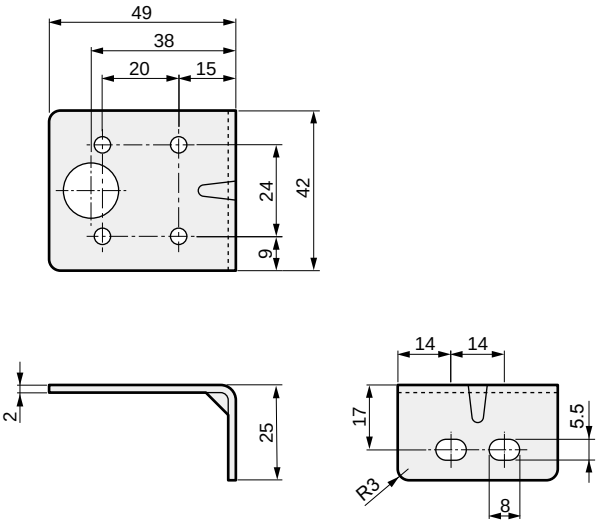

● How to order T type bracket set

B110 - W

· Weight: 24g
· Material: Polyamide resin

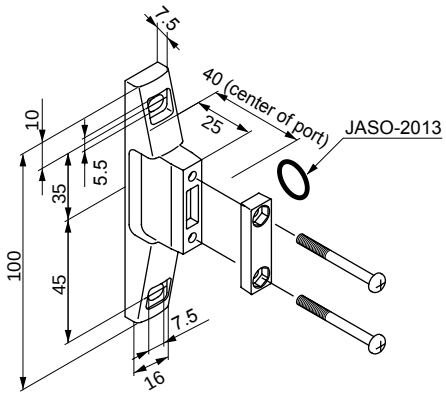

● How to order air filter

F1000 - 8 - W

Weight: 87g

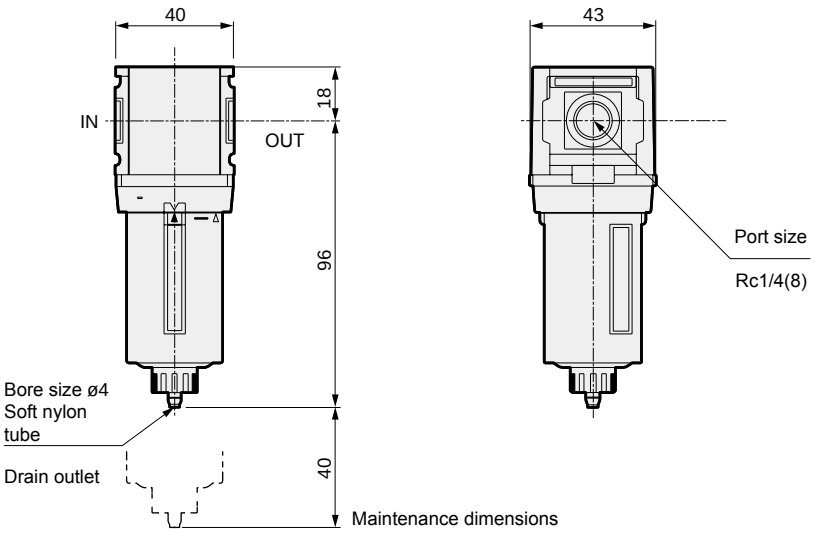

Peripheral devices

How to order

● How to order regulator

R1000 - 8 - W - LT

Weight: 150g

Dimensions

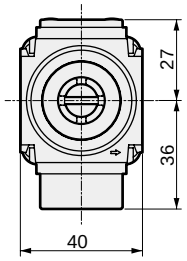

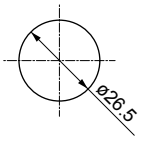

Panel cut dimension
(Panel plate thickness: max. 6 mm)

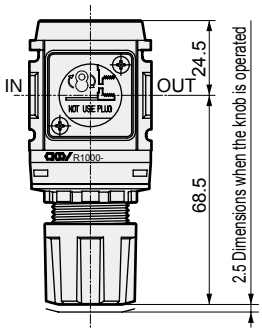

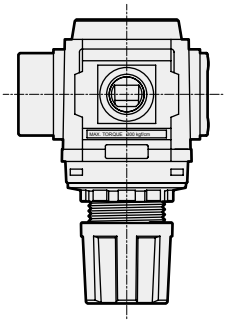

● How to order joiner set

C1000 - J100 - W

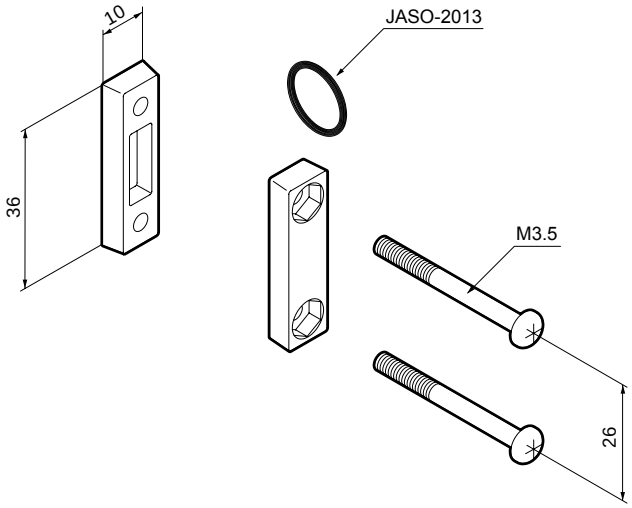

· Weight: 11g
· Material: Polyamide resin

● How to order distributor

D101 - 00 - 8 - W

Note: A joiner set and one gasket are included.

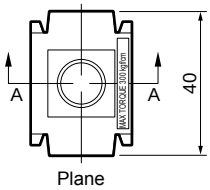

Plane

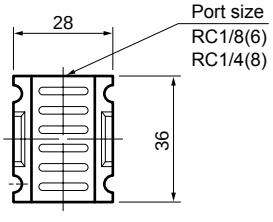

Front

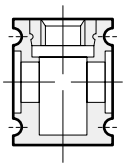

Cross-section A-A

· Weight: 45g
· Material: Polyamide resin

Peripheral devices

How to order

● Pipe adaptor set
(with joiner set)

A100 - 8 - W

Ⓐ Port size

Ⓐ		
	8	Rc1/4
	10	Rc3/8

Dimensions

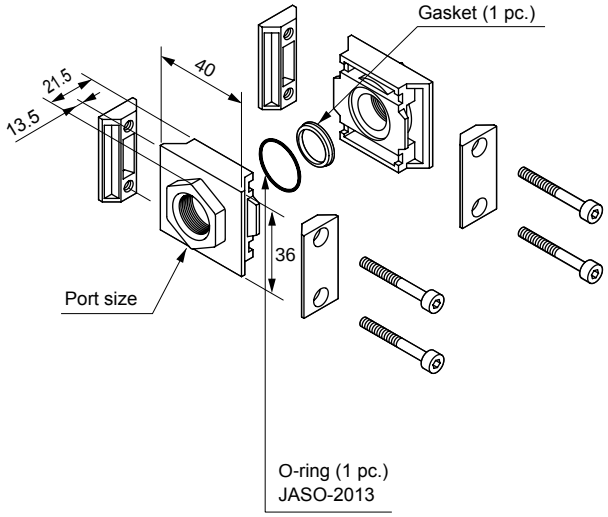

· Weight: 90g
· Material: Aluminum alloy die-casting
Painting

● Pipe adaptor set
(with T type bracket set)

A100 - 8 - W - B11W

Ⓐ Port size

Ⓐ		
	8	Rc1/4
	10	Rc3/8

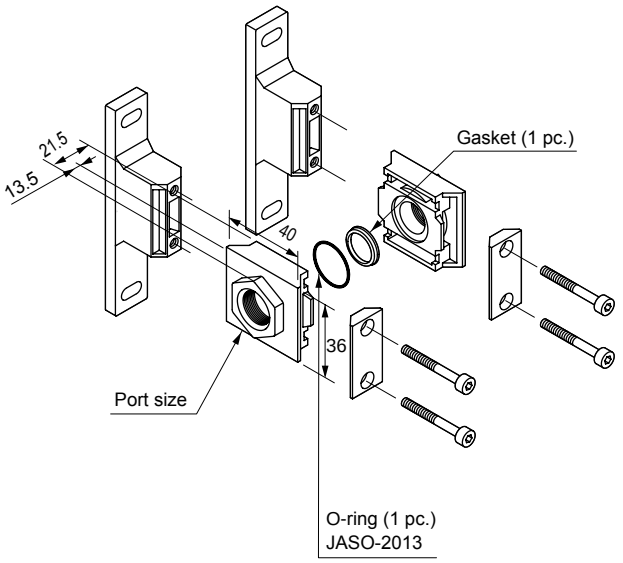

· Weight: 90g
· Material: Aluminum alloy die-casting
Painting

Peripheral devices

Solenoid valve with needle

How to order

GPS2 - AB3X - 2E - FL - AC100V

Ⓐ Terminal box		Ⓑ Voltage
2E	DIN terminal box	100 VAC
2H	DIN terminal box with lamp	200 VAC
3N	HP terminal box with lamp	24 VDC

Dimensions CAD

● GPS2-AB3X-2E/2H-FL-AC100V/AC200V

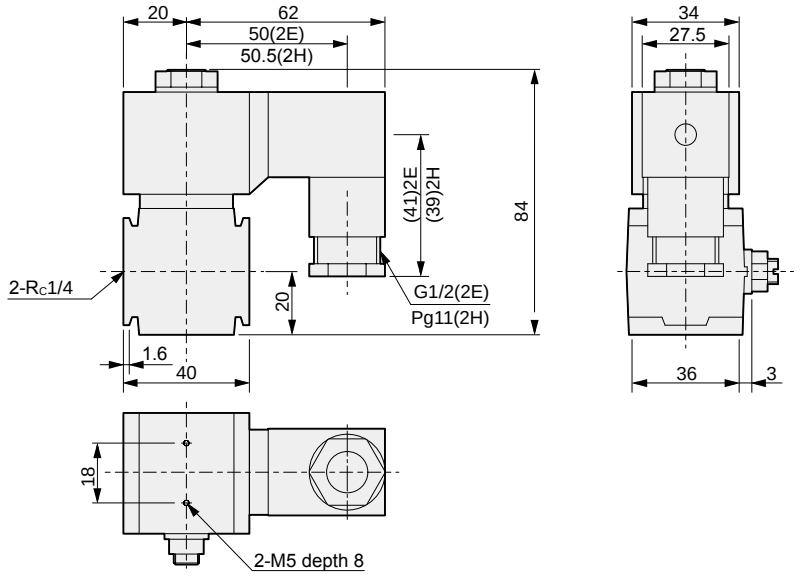

· Weight: 280g

● GPS2-AB3X-3N-FL-AC100V/AC200V

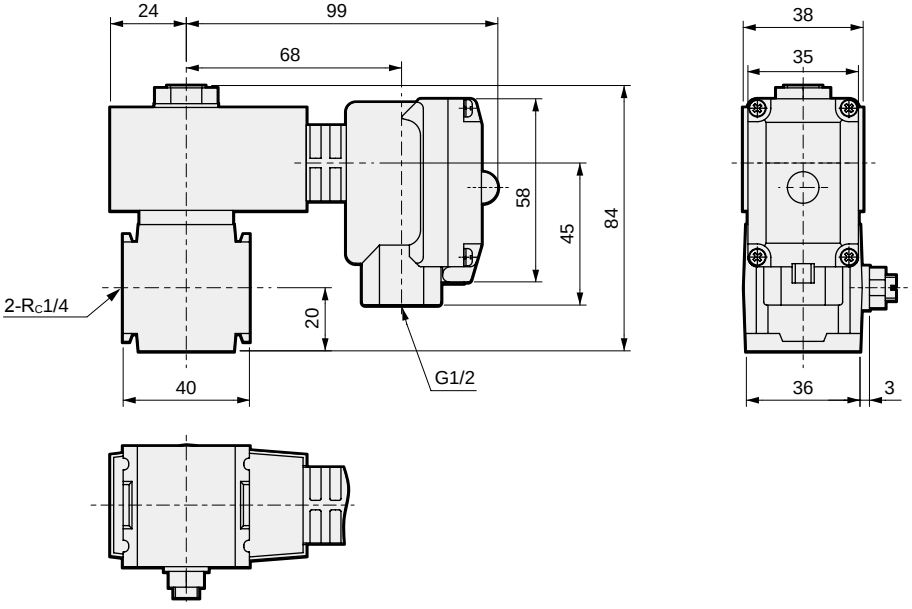

· Weight: 445g

Solenoid valve with needle Dimensions CAD

● GPS2-AB3X-$\frac{2E}{2H}$-FL-DC24V

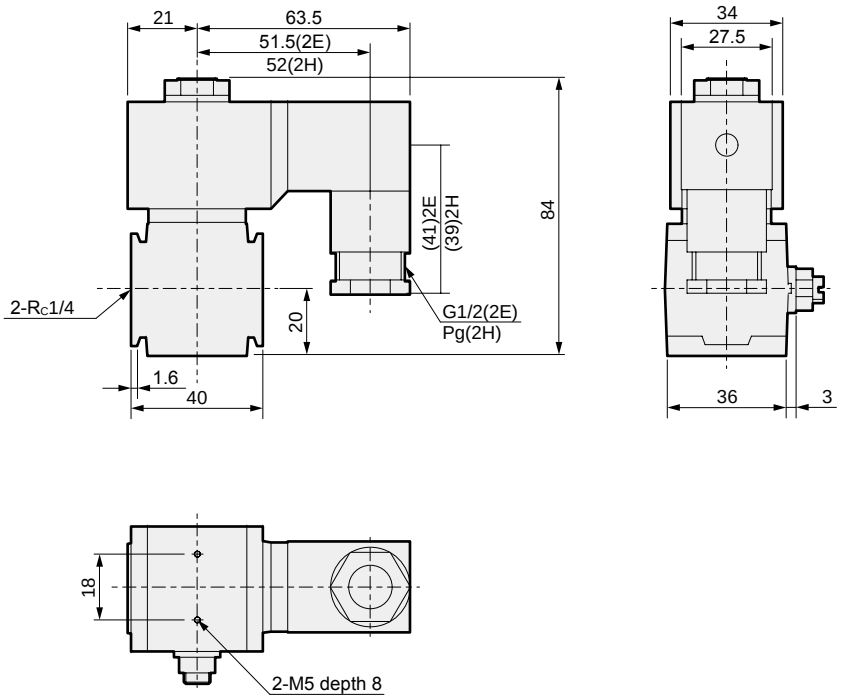

· Weight: 280g

● GPS2-AB3X-3N-FL-DC24V

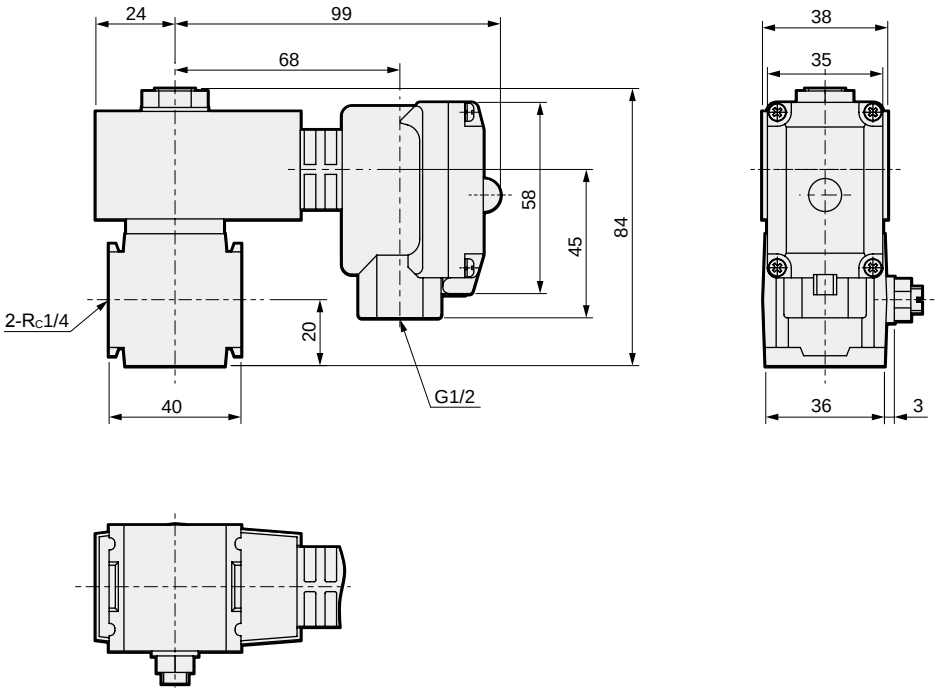

· Weight: 445g

Characteristics data

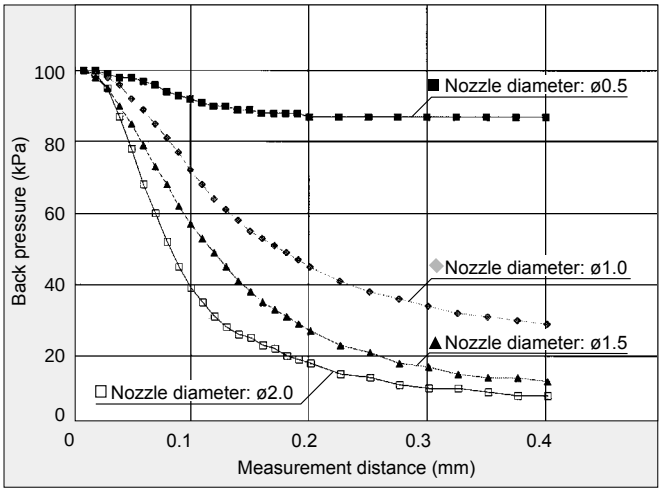

● Back pressure characteristics 1- change of nozzle diameter

Measuring conditions

· Type: GPS2-07-15 · Bore size: ø6 x ø4 · Pipe length: 5 m

· Setting distance: 0.1 mm · Average supply pressure: 100 kPa

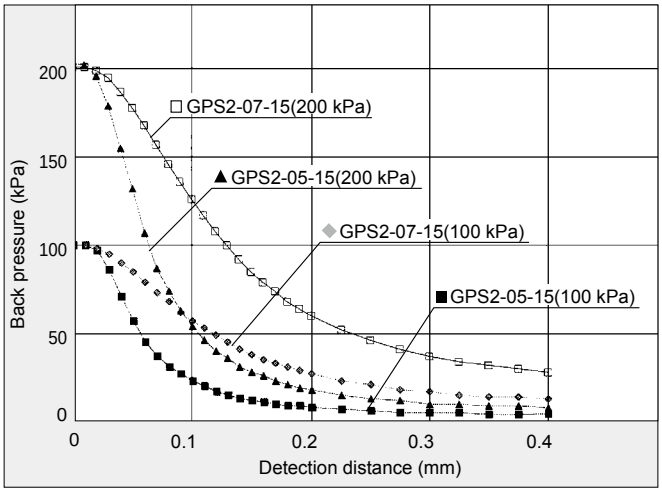

● Back pressure characteristics 2 - GPS2 difference in model

Measuring conditions

· Bore size: ø6 x ø4 · Pipe length: 5 m

· Nozzle diameter: ø1.5 · Setting distance: 0.1 mm

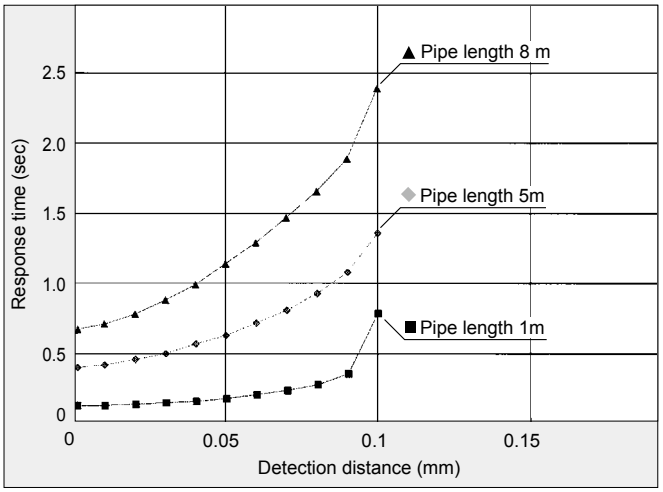

● Response time 2 - influence by pipe length (OFF → ON)

Measuring conditions

· Type: GPS2-07-15 · Bore size: ø6 x ø4

· Nozzle diameter: ø1.5 · Supply pressure: 100 kPa

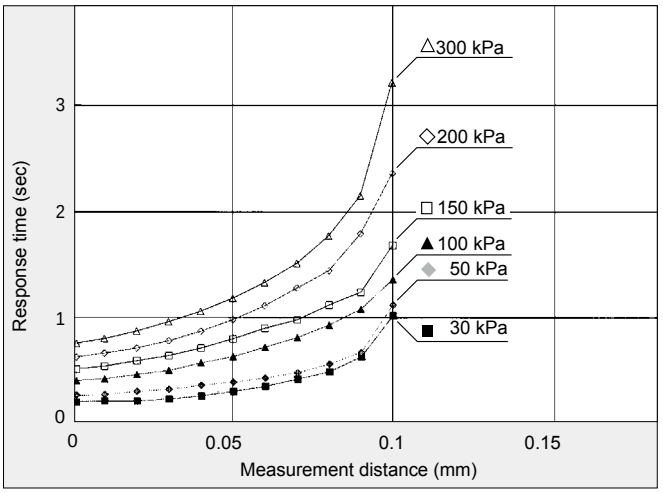

● Response time 2 - influence by supply pressure (OFF → ON)

Measuring conditions

· Type: GPS2-07-15 · Bore size: ø6 x ø4

· Nozzle diameter: ø1.5 · Pipe length: 5.0 m · Setting distance: 0.1 mm

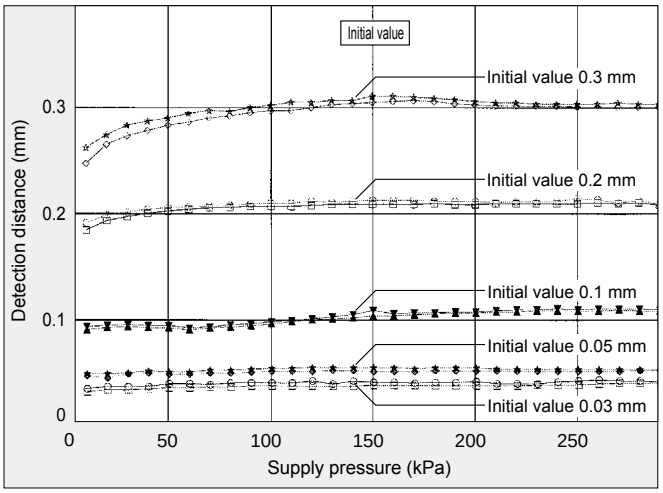

● Supply pressure change - recommended range 50 to 200 kPa

Measuring conditions

· Type: GPS2-07-15 · Bore size: ø6 x ø4

· Pipe length: 5 m · Nozzle diameter: ø1.5

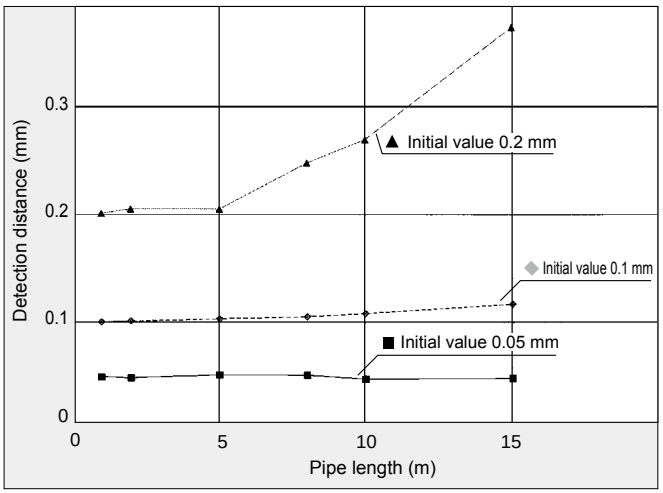

● Influence to initial setting distance by pipe length

Measuring conditions

· Type: GPS2-07-15 · Bore size: ø6 x ø4

· Nozzle diameter: ø1.5 · Supply pressure: 100 kPa · Initial pipe length: 5 m

Characteristics data (HPS Series)

● Back pressure characteristics 1 (ø1.5 nozzle)

Measuring conditions
Bore size : ø6 x ø4
Pipe length : 5 m
Set pressure : 100 kPa
Nozzle diameter: ø1.5

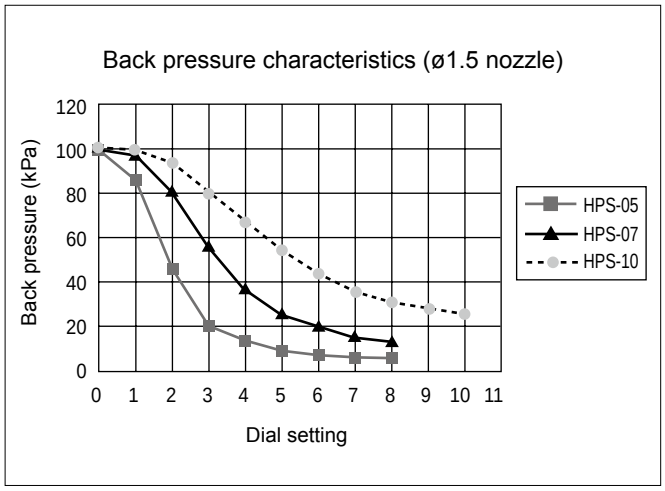

● Detection distance characteristics 1 (ø1.5 nozzle)

Measuring conditions
Bore size : ø6 x ø4
Pipe length : 5 m
Set pressure : 100 kPa
Nozzle diameter: ø1.5

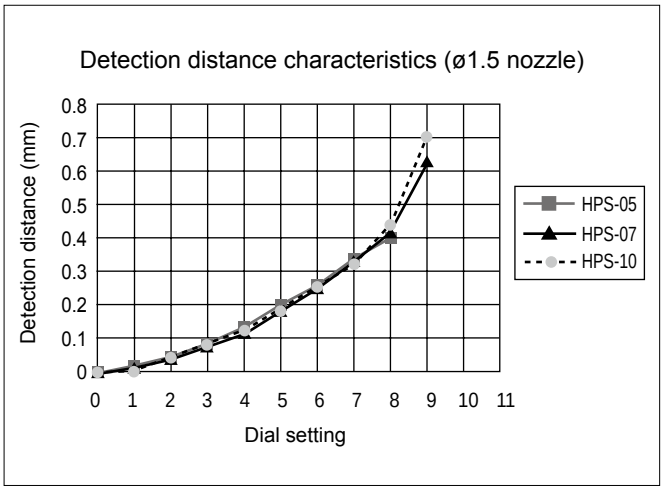

● Back pressure characteristics 2 (back pressure nozzle)

Measuring conditions
Bore size : ø6 x ø4
Pipe length : 5 m
Set pressure: 100 kPa

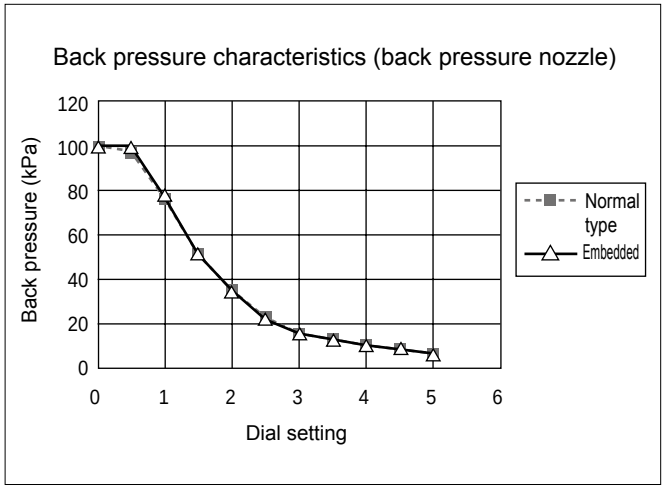

● Detection distance characteristics 2 (back pressure nozzle)

Measuring conditions
Bore size : ø6 x ø4
Pipe length : 5 m
Set pressure: 100 kPa

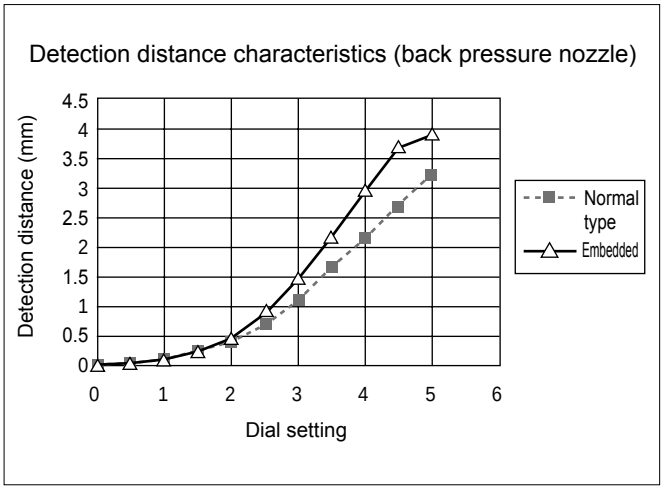

Characteristics data (TLPS Series)

Air consumption

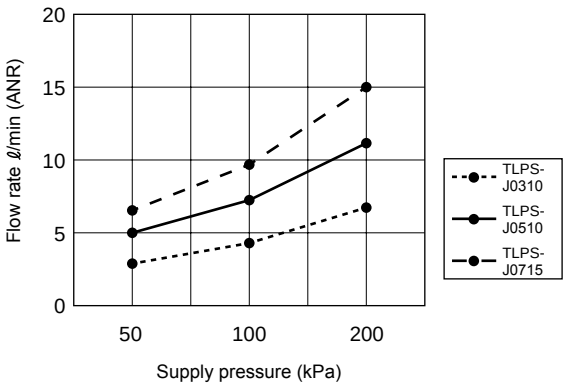

Response time - influence by pipe length

● TLPS-J0310

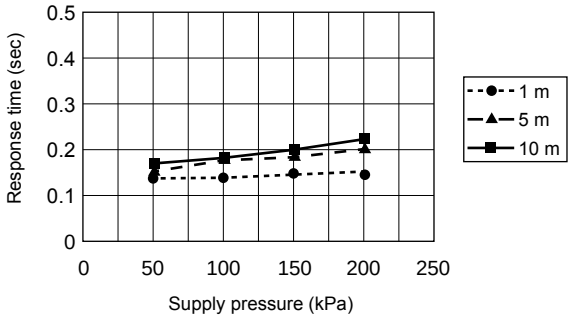

● TLPS-J0510

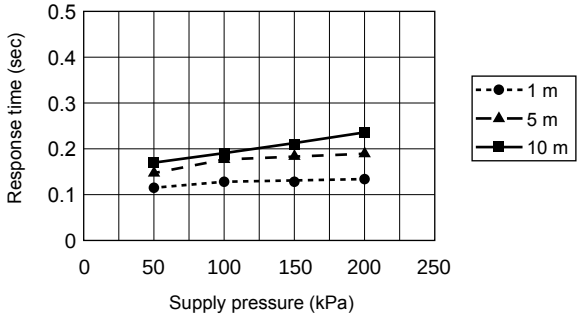

● TLPS-J0715

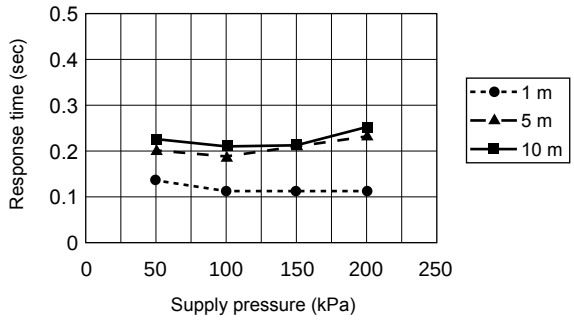

MEMO

Safety Precautions

Be sure to read this section before use.
Refer to Intro Page 63 for general precautions regarding pneumatic components and refer to "⚠Safety precautions" for detailed precautions for individual series.

Product-specific cautions: Contact/close contact confirmation switch/cutting tool breakage detection switch GPS2/HPS and TLPS Series

Design/selection

⚠WARNING

■ Use the product in the range of conditions specified for the product.
Contact CKD when using the product outside specifications or for special applications.
- Use of the product exceeding the specifications range may result in insufficient performance, and safety cannot be guaranteed.

■ Confirm before use that the product will withstand the working environment.
- Cannot be used in environments where its functions will be impeded.
- The main materials of this product are aluminum and resin. Do not use in atmospheres where corrosive gases are generated. Such environments include high temperatures, chemical atmospheres, where chemical liquids, vibration, moisture, water dripping, coolant, or gas is present; where ozone is generated; chemical plants, semiconductor pre-processing, outdoors, etc.
- Compressed air quality must satisfy JIS 1.4.1, "oilless clean dry air."

■ Understand the characteristics of compressed air before designing a pneumatic circuit.
- This product has a small orifice, so to prevent the entry of foreign matter, use clean air with the recommended circuit shown below (GPS2/HPS: Fig. 1; TLPS: Fig. 2).

Fig. 1 Recommended circuit

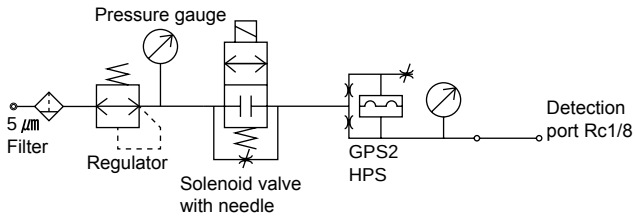

Fig. 2 Recommended circuit

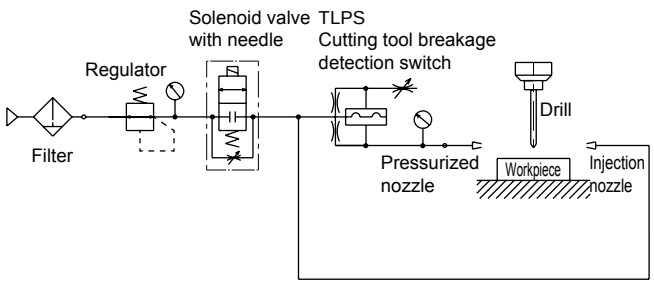

■ Precautions for GPS2, HPS
Do not use the following air circuit when blowing air from the detection nozzle.
- Circuit with check valve
The check valve acts as exhaust resistance, and limits the adjustable range.
- Circuit with shuttle valve and 2-way valve
Residual pressure in the OUT side of the 2-way valve prevents a correct detection. Even if a 3-way valve is used, the shuttle valve may vibrate excessively.

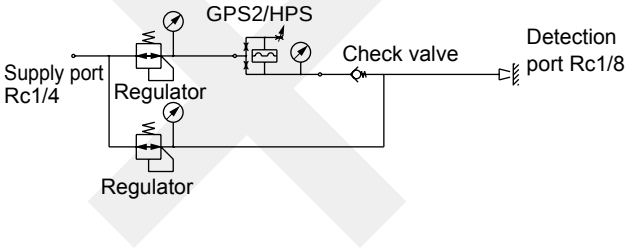

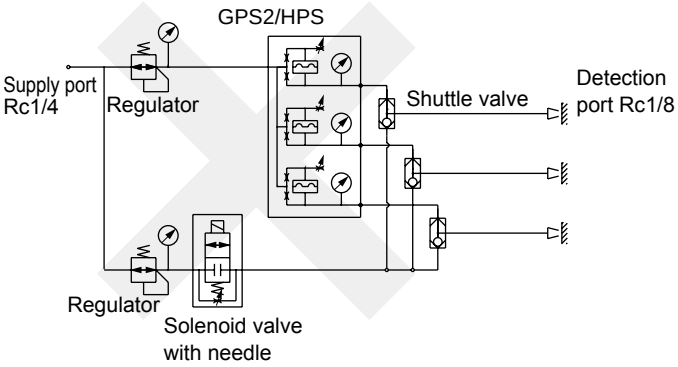

⚠CAUTION

■ The entry of compressor oil and tarry substances may obstruct the flow of air and result in problems. Regularly inspect the compressor and discharge drainage.

■ Keep the air flow constant so coolant and oil do not flow back from the detection nozzle, or use a solenoid valve with needle and let in a small amount of air from the bypass as shown in the recommended circuit (GPS2/HPS: Fig. 1, TLPS: Fig. 2).

■ Swarf and grinder chips, etc., could clog the nozzle. Increasing the supply pressure to blow these out will have no effect. Provide a 3-way valve on the pressurized nozzle as shown below (GPS2/HPS: Fig. 3, TLPS: Fig. 4). The orifice for the 3-way valve should be ø2.5 mm or larger.

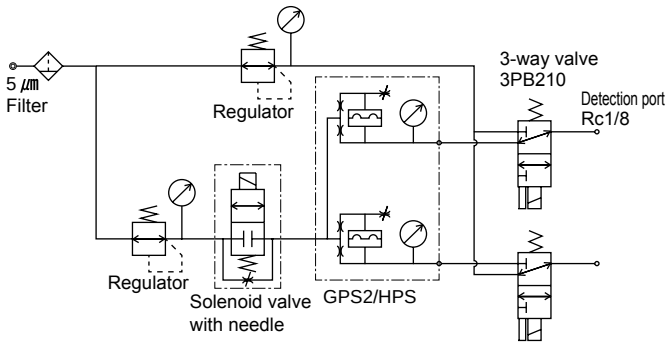

Fig. 3 Circuit for detection and air blow

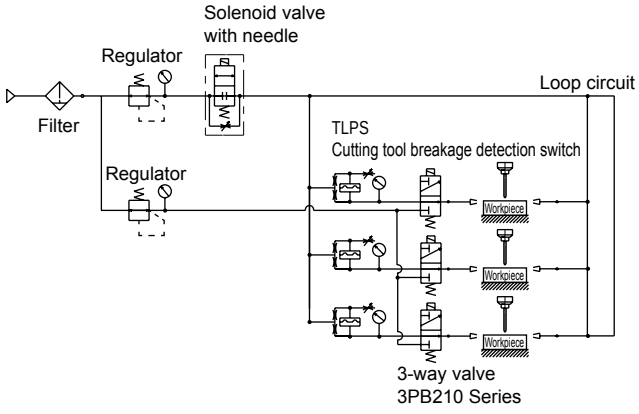

Fig. 4 With air blow used by several applications

■ Select an output format (NPN, PNP) matching the input unit of the programmable controller being used.

■ Operation may be disabled if a capacitance load such as an AC/DC buzzer is connected to the load. Turn power OFF and restart in this case.
A protection circuit is provided to prevent damage from incorrect wiring or overcurrent. A relay must be used when connecting a capacitance load.

■ Precautions for GPS2, HPS

- Use a ø4 bore and ø6 outer diameter pipe on the detection side.
- An air bridge circuit is used for this product. Even if the fine air solenoid valve is turned OFF, the output is not turned OFF, which is the same for the conventional pressure switch. Output is turned ON and OFF according to the pressure of a workpiece. Care must be taken when creating the program. If the program has already been created and cannot be changed, stop the fine air. Note that a delay of one second occurs when output is turned ON and OFF.
- Pressure switch and solenoid valve with fine air
  When the fine air solenoid valve is ON →
  Workpiece absent: OFF Workpiece present: ON
  When the fine air solenoid valve is OFF →
  Workpiece absent: OFF Workpiece present: OFF
- GPS2/HPS and fine air solenoid valve
  When the fine air solenoid valve is ON →
  Workpiece absent: OFF Workpiece present: ON
  When the fine air solenoid valve is OFF →
  Workpiece absent: OFF Workpiece present: ON

■ Precautions for TLPS

- Use a ø4 bore and ø6 outer diameter pipe. When using 3, 4, or 5 stations, try to keep the injection rate of each nozzle as uniform as possible. When branching, use a ø8 outer diameter, ø6 bore main pipe as shown in Fig. 4, and create a loop circuit.
- Signals for the cutting tool breakage detection switch are shown below.

Drill / Status	Drill present	Without drill
Air stop	OFF	OFF
Air supply	OFF	ON

- When using the recommended circuit (Fig. 2) having a solenoid valve with needle, a small amount of air is supplied constantly.
  Even if the solenoid valve with needle is OFF, the cutting tool breakage detection switch may activate depending on the air supply.
- The recommended supply pressure when using the standard detecting nozzle is 100 kPa. Contact CKD on the detecting nozzle shape and air circuit when a width larger than the standard nozzle detection width of 32 mm is required.
- Air flows only during detection
  Let air flow for at least two seconds. After the solenoid valve is released, wait at least 1 second for the state to stabilize before retrieving signals. The remaining 1 second acts as judgment time, and the signal turns OFF when the drill is normal.
  · Continuously flowing air
  Response time differs with the pipe length and supply pressure, but is approx. 0.2 seconds (refer to page 1310). As a reference, the judgment time should be set to 0.5 seconds.

Mounting, installation and adjustment

⚠CAUTION

■ Observe the following items when installing.

- Install this product so the detection port faces downward.
- Install this product at a position higher than the seating surface to prevent coolant from entering.
- Provide enough space for adjustment, monitoring, and maintenance.
- Use rust-resistant material such as nylon tubes or stainless steel pipes for piping material.
- Before piping, blow pipes with compressed air to remove foreign matter and swarf.
- When connecting equipment and piping, ensure that no sealant tape or sealant material enters.
- When installing this product on a device, check that no load is applied to the device.
- When using steel pipes, securely fix the pipe to prevent excessive bending force from being applied to the connection.
- Do not strike or bump this product.
- When welding near this product, cover it to prevent spatter from coming in contact.
- When housing this product in a box, provide an exhaust port so atmospheric pressure is maintained in the box.

■ Observe the following items when wiring.

- When using a switching regulator for the power supply, ground the F.G. (frame ground).
- Avoid using in a transient state, continuing 1s after power is turned ON.
- Take special care to prevent load short-circuits or incorrect wiring. The protective circuit is activated. Turn power OFF to restart the product.
- Connector pins are arranged as shown in Fig. 5. Take special care to prevent incorrect wiring.

Brown → 24 VDC
Blue → 0 VDC
Black → signal, open collector

Fig. 5 Connector pin array (body side)

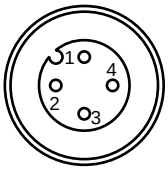

PIN array/lead wire color list

PIN No.	Electric connection option (-C1, -C3, -C5) lead wire color	Applications
1PIN	Brown	Power supply +
2PIN	White	NC
3PIN	Blue	Power supply -
4PIN	Black	Output

- The assignment of the DIN terminal box terminal numbers is shown in Fig. 6.

Fig. 6 DIN terminal box pin array (body side)

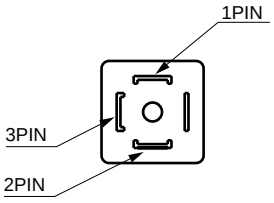

PIN No.	Applications
1PIN	Power supply +
2PIN	Power supply -
3PIN	Output

- When using the common terminal box, power supply terminals are on the lower side of the terminal box. Signal wire terminals are on the upper row. This product is wired as shown in Fig. 7.

Fig. 7 Terminal box layout

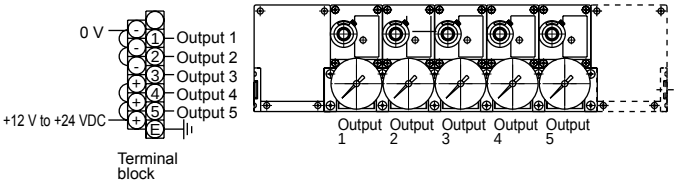

- If terminals are wired incorrectly, the protection circuit will not function and the internal proximity switch will be damaged.

Connector 1 Brown → output
3 Blue → 24 VDC
4 Black → 0 VDC

DIN terminal 1 → output
2 → 24 VDC
3 → 0 VDC

- When using a load with a large rush current, such as a motor, the protection circuit will activate. In this case, use a relay.
- If there is a device (motor, welder) that generates a large surge near this product, insert a surge suppressor, such as a varistor, at the source of the surge.
- If this product's lead wire is wired with the drive cable or power cable, it is affected by surge and noise deteriorating or damaging the sensor element in the close contact confirmation switch. Use separate wiring.

- NPN output and PNP output are available. The lamp turns ON even if program controller compliance is incorrect, but signals are not retrieved. Wire the switch based on the output as shown in Fig. 8.

(NPN output)

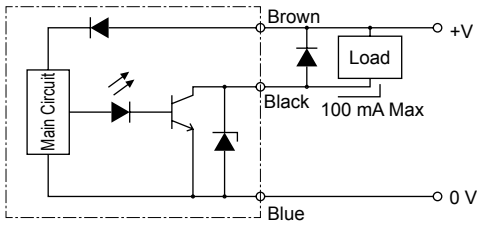

(PNP output)

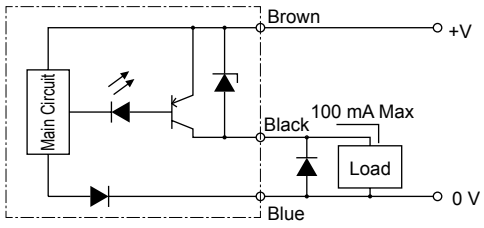

Fig. 8 Output circuit

■ If the adjustment dial (needle) is dropped, bumped against or tapped, the relation of the stamped scale and detection distance changes. Handle this adjustment dial with care.

■ Precautions for GPS2, HPS

Using the master gauge and gap gauge

- Three workers are required: one to set the gauge, one to operate the machine, and one to adjust this product. The gauge is adjusted while operating the machine, so three workers must cooperate in order to have no one exposed to risk. For safety, it is sufficient to adjust this product with a dial gauge.
- Clearance cannot be set unless the master gauge or gap gauge is accurately pressed against the detection nozzle.

Fig. 9

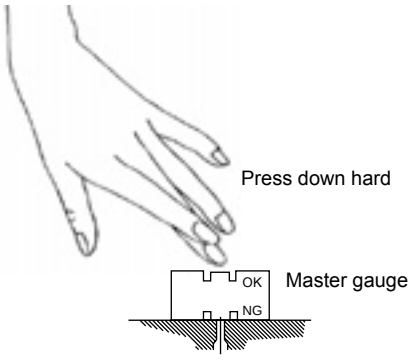

■ Precautions for GPS2

Handling the gap amount adjustment dial

- The detection distance is stamped on the adjustment dial. Red indicates 0.05 mm, blue 0.1 mm, and yellow 0.2 mm. Shipment inspection is done with a 1.5 mm detection nozzle diameter, and a 5 m long 4 mm bore nylon tube. If the standard 1.5 mm nozzle diameter is not to be used, adjust the distance as shown in the following table.

Relationship of dial scale and detection distance
The following table is a guide for when the following conditions are applied.
(Conditions) Supply pressure: 100 kPa
Piping: ø6 x ø4 tube, when length is 5 m

[GPS2-05-15]

		Detection distance (mm)			Detection distance variation/notch (mm)
Detection nozzle diameter		ø1.0	ø1.5	ø2.0	ø1.0 to ø2.0
Scale line	1 (Red wire)	0.07	0.05	0.03	0.005
	2 (Blue wire)	0.14	0.09	0.06	0.005 to 0.007
	3 (Yellow)	-	0.20	0.14	0.008 to 0.010

[GPS2-07-15]

		Detection distance (mm)			Detection distance variation/notch (mm)
Detection nozzle diameter		ø1.0	ø1.5	ø2.0	ø1.0 to ø2.0
Scale line	1 (Red wire)	0.07	0.05	0.03	0.005
	2 (Blue wire)	0.15	0.10	0.06	0.005 to 0.007
	3 (Yellow)	-	0.20	0.13	0.008 to 0.010

■ Precautions for HPS

Adjustment sequence

1. When this product is shipped from CKD, the adjustment needle is set to display 0 rotations as the number of rotations, and rotation angle 0.
2. Supply air. The indicator lamp turns OFF.
3. With the master gauge OK, rotate the adjustment needle dial in the direction in which the value increases (open), and find point A where the light changes from OFF to ON.
4. On the master gauge NG side (changes to OFF), rotate the dial further in the direction with the value increasing (open), and find point B' where OFF changes to ON.
5. Rotate the dial in the direction in which the number of rotations drops (closed), and find point B where the light changes from ON to OFF. The adjusting range is found by counting the number of rotations from point A to point B.
6. Rotate the adjustment needle in the closed direction, and set to the middle point between point A and point B. This position is point C.
   - If point C is near point B, the signal turns ON easily and response time is short. However, it takes time to return. Stable detection is possible by setting adjustment point C between point A and point B.
7. Lock the dial after adjusting.

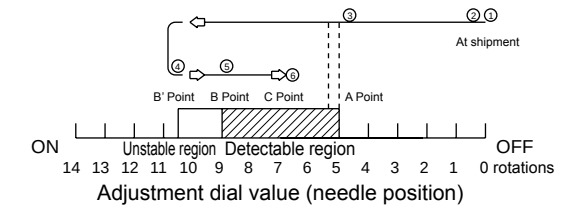

Adjustment dial value (needle position)

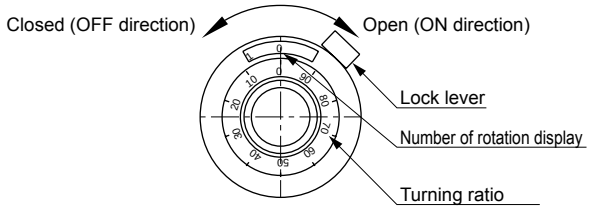

Needle adjustment dial

- Do not turn the dial with force at either extremity of the rotation.
  The dial can be rotated up to 14 times.

Mounting, installation and adjustment

⚠CAUTION

■ Precautions for TLPS

● Adjustment order

1. When this product is shipped from CKD, the adjustment dial is set to display 0 rotations as the number of rotations, and rotation angle 0.
2. Supply air. The indicator lamp turns OFF.
3. Without the drill set, rotate the needle adjustment dial in the direction in which the value increases (opens), and find point A where the lamp changes from OFF to ON.
4. Set 1 mm of the end of the drill between the nozzle (the lamp will turn OFF), and rotate the dial further in the direction in which the value increases (opens), and find point B' where the lamp changes from OFF to ON.
   - It may be difficult to find point B' if more than 1 mm of the end of the nozzle, or a nozzle other than the standard nozzle is used. In this case, turn the dial half a turn (50 scale) from point A, and set that point as setting point C.
5. Rotate the dial in the direction in which the number of rotations drops (closed), and find point B where the lamp changes from ON to OFF. The adjusting range is found by counting the number of rotations from point A to point B.
6. Rotate the adjustment needle in the closed direction, and set to the middle point between point A and point B. This position is point C.
   - If point C is near point B, the signal turns ON easily and response time is short. However, it will take time to return. Stable detection is possible by setting adjustment point C between point A and point B.
7. Lock the dial after adjusting.

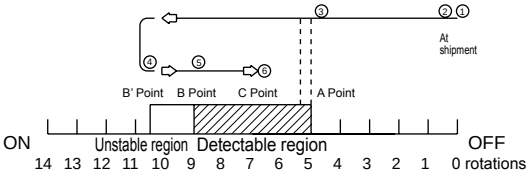

Adjustment dial value (needle position)

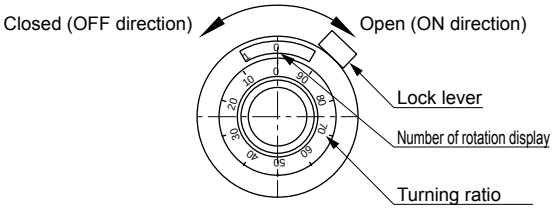

Needle adjustment dial

- Do not turn the dial with force at either end of the rotation. The dial can be rotated up to 14 times.

Use/maintenance

⚠CAUTION

■ One detection nozzle can be used for one of these product units.

■ Immediately after work is started, the coolant from the nozzle may accumulate in the pipe and cause the sensor to turn ON for a short time. Wait for coolant to be discharged by detection air before starting the machine.

■ If the nozzle is clogged, the monitor pressure gauge's needle stops at high pressure and does not return to 0. Remove the pipe on this product's side, and blow out stuck foreign matter with an air gun. If foreign matter cannot be removed, poke a needle, etc., through the detection nozzle on the end.

■ Precautions for TLPS

If the cutting tool breakage detection switch signal continuously turns ON and OFF, an error has occurred.
Error signals are listed below.

Continuously OFF	Continuously ON
· Without air · Improper adjustment · Clogging of injection nozzle · Leak from piping · Disconnection · Failure of internal circuit	· Cutting tool breakage detection · Improper adjustment · Clogging of pressurizing nozzle · Breakage or bending of piping · Failure of internal circuit

Air sensor
PEL systems

■ Pressure sensor/air sensor

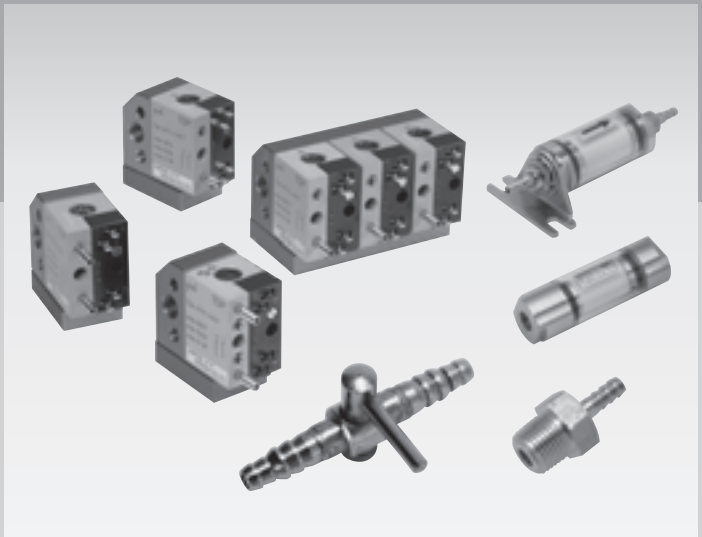

Overview

The air sensor consists of a sensor nozzle and an air-electricity (air-air) converter. In principle, the detection air is blown onto the workpiece and the generated back pressure is converted to an electrical signal by the air-electricity converter. The sensor nozzle can be located anywhere, enabling compact system design.

Features

Compact/sensitive
All models are compact size. Space saving, high precision and quick response.

For all objects
Non-contact detection does not damage the detection target and enables almost any solid object to be detected.

A great variety of applications
For presence confirmation, position/dimension confirmation, counting, level check, pressure control, etc.

CONTENTS

PEL systems
- Switching element (APA1/APA3) 1318
- Detection nozzle (APA4) 1321
- PL switch (PL) 1324
- SEPEL switch (DPS) 1330

Air sensor related products
- Filter (K) 1332
- Piping instrument (APA6) 1333
- Needle (APA6) 1334
- Tube (46011) 1334

⚠ Safety precautions 1335

Planned for end of production November 2022

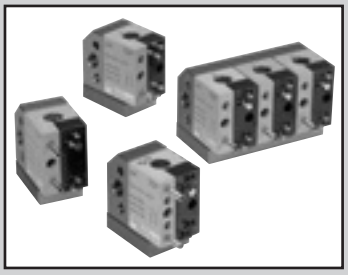

PEL system

APA Series

· A pneumatic bridge circuit is adopted.
· Non-contact air detection system with a wide detection range.
· Not affected by the detection object material.
● Piping bore size: ø3 to ø4

CE

Specifications

Item		APA
Working pressure	Use pressurized MPa	Standard: 0.14 Practical range: 0.005 to 0.3
	Use with vacuum pressure kPa	Standard: -81 Practical range: -21 to -96
Air consumption ℓ/min (ANR)		10 to 112 (This differs with the switching element nozzle shape combination. Refer to page 1328)
Output		Terminals 1 and 2 for 2 contact signal reed switches: NO contact Terminals 3 and 4: NC contact
Contact capacity	Max. voltage	50V AC/DC
	Max. current	0.5 A
	Max. power consumption	5 W
	Rating	24 VAC/DC 0.2A
Electrical service life		10 million cycles and over (at 24 V 0.2A))
Mechanical durability		10 million cycles and over
Response time		Max. 20Hz (gaging switch)
		Max. 50Hz (differential pressure gaging switch))
Hysteresis		1.5 to 20 μm (when used for gaging))
Reproducibility		0.2 to 4 μm (when used for gaging)
Connection tube bore size mm		ø3 to ø4
Ambient temperature °C		0 to +60 (no freezing)
Weight g		138

How to order

The PEL system uses the switching element and detection nozzle combined.

APA1 - AA 03 - 2

Ⓐ Model
Ⓑ Fixed orifice size
Ⓒ Station No.

Code	Description
Ⓐ Model	
AA	General purpose
AK	Vacuum
AC	For dimension selection
BL	Differential pressure switch

Ⓑ Fixed orifice size

Model	Without orifice	AA	AK	AC	BL
00	Without orifice	—	—	—	●
03	0.3 mm	●	—	—	—
05	0.5 mm	●	●	●	—
07	0.7 mm	●	●	—	—
10	1.0 mm	●	—	—	—

Ⓒ Station No.

Blank	Single unit
2	2 stations
3	3 stations
4	4 stations
5	5 stations

AA (General purpose/with needle)

● This is a general-purpose element with a wide working range that covers gauging (dimension sorting) and control (presence confirmation). This basic PEL element consists of one variable orifice and one detection nozzle connection port. This element is a pneumatic bridge circuit.

AK (Vacuum/without needle)

● This element does not have a variable orifice, which must be installed externally. AK is convenient when an application exceeds the AA element's variable orifice adjusting range or when the range is difficult to adjust.

AC (Dimension selection/for cascade connection)

● Several AC elements are assembled in the manifold, and detection ports are centralized and connected to the detection nozzle with one pipe. Use this when there is more than one setting point, such as when confirming dimensions.

BL(Differential pressure switch/without needle, without orifice)

● This element is pneumaticNo bridge circuit is configured. Extract ports from top and bottom of the magnet float, and use this element as a differential pressure switch.

Dimensions

● Switching element (APA1)

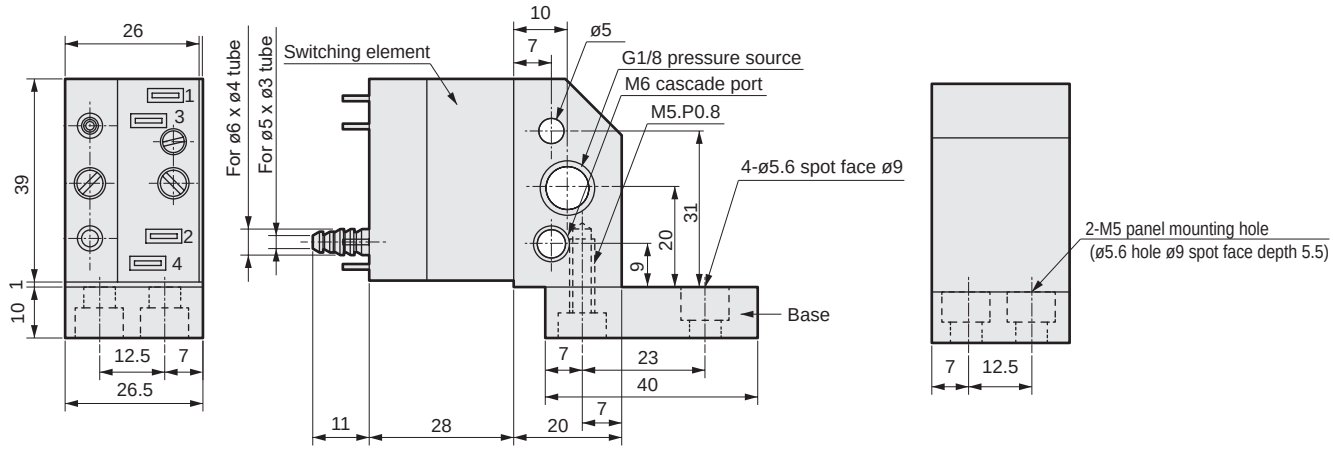

● Manifold and base (APA3)

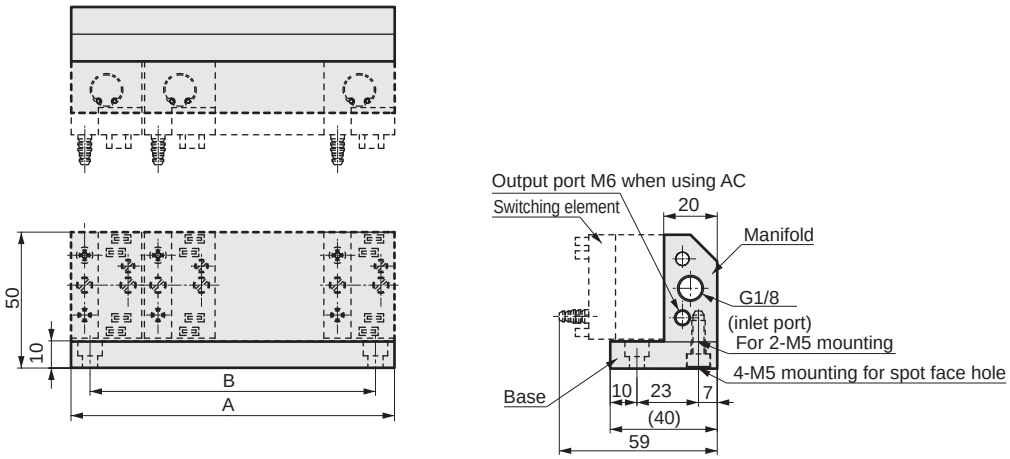

Type and dimensions of manifold assembly components

No. of switching elements installed	Component (model No.)				Dimensions (mm)	
	Manifold	Weight (g)	Circuit board (base)	Weight (g)	A	B
2	APA3-AA2-20	88	APA3-B2	55	53	39
3	APA3-AA3-20	134	APA3-B3	84	80	66
4	APA3-AA4-20	181	APA3-B4	114	108	94
5	APA3-AA5-20	227	APA3-B5	141	133	119

Internal structure

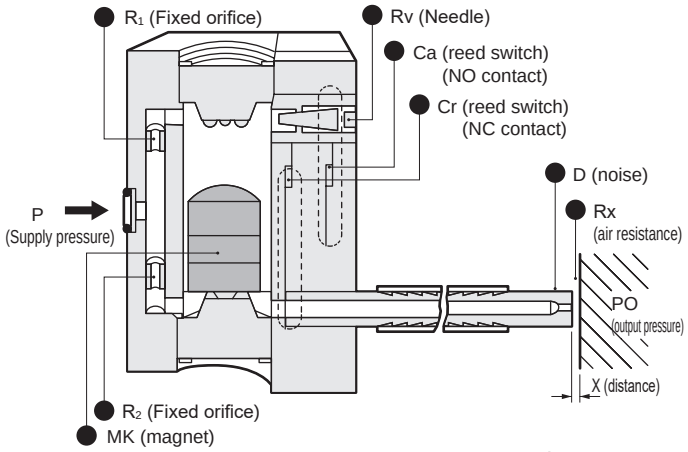

Fig. 1

Configuration of PEL

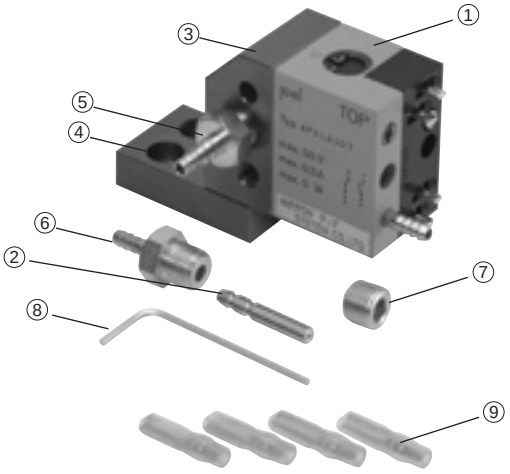

(Note) Nozzle (2) is a gauge nozzle. One APA-BA10 with a 1 mm bore is included as an accessory. All other nozzles are optional, and must be ordered separately. Types are shown on page 1321.

Operational principle

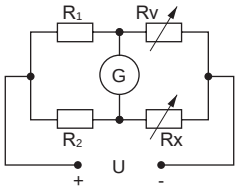

Fig. 2

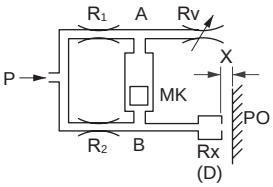

Fig. 3

- The PEL connects the electric circuit's Wheatstone bridge to the bridge circuit using air.
- This is shown in Fig. 1, 2 and 3. The electrical circuit's fixed resistance, R_1/R_2, is equivalent to the pneumatic circuit's fixed orifice, R_1/R_2. The electrical circuit's variable resistance, Rv/Rx, is equivalent to the pneumatic circuit's variable orifice, Rv, and to the pneumatic resistance Rx which is generated when distance X between the nozzle and specimen changes.
- When distance X changes and pneumatic resistance, Rx, changes, the nozzle's back pressure also changes, and differential pressure is generated between A and B in pneumatic pressure bridge circuits. This vertically displaces the float, MK, which has a permanent magnet, and changes the two reed switches (NO contact for Ca, NC contact for Cr).
- The switch operates as a differential pressure switch at 0.15 kPa, and as a simple pressure switch at 0.5 kPa.

PEL consists of the following parts: (AA)

No	Part name	Part No.
①	Switching element	1
②	Nozzle	1
③	Manifold	1
④	Circuit board (base)	1
⑤	Hose nipple ø4	1
⑥	Hose nipple ø3	1
⑦	Plug Rc1/8	1
⑧	Hexagonal wrench 1.5HEX	1
⑨	Connector (bullet) terminal	4

Detection nozzle

This nozzle is used with the switching element. Nozzle parts can be assembled separately or combined to match the application. This enables different types of detection sensor circuits to be configured.

Operational principle

As shown in Fig. 1, the air flow injected from the nozzle drops, so back pressure, Po, increases. The switching element is turned ON and OFF by this pressure, Po, and the state is detected.

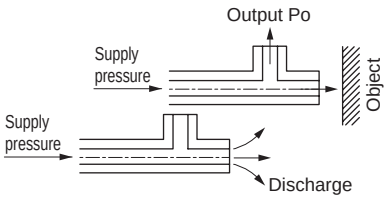

Fig. 1

● For gauge (BA)



Most nozzles for gauge applications are round. Due to the relationship to the flow area, the measurement distance is X ≤ $\frac{d}{4}$ (d: detection nozzle inner diameter; X: distance from detection object). This nozzle is used with a relatively short clearance. The ideal bore is 1 mm to 2 mm (APA4-BA10 or APA4-BA20).

● Back pressure (DA10)/(DA20)

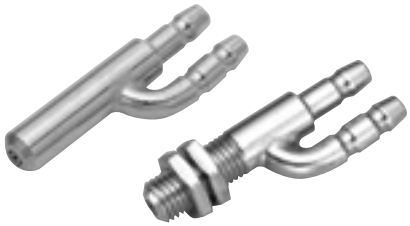

With this type, another layer, B, of air flows on the outside of the gauge nozzle, A, making it more difficult for air inside to diffuse. The measurement distance is longer and accuracy is lower than for the gauge type.

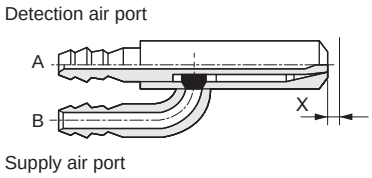

Fig. 2

● Reflection (VS)



Another air layer, B, is created on the outside, the same as for the back pressure, but this type is designed so that the air forms a vortex and is constrained. Air on the inside does not diffuse as easily as with the back pressure, so measurement is longer.

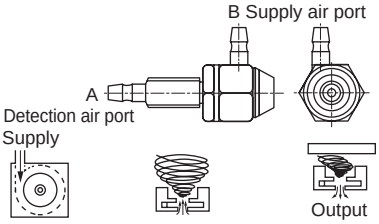

Fig. 3

● Detecting (GA)



This type of nozzle is mainly used to detect the presence of objects. Measurement is longer compared to the three types of nozzles explained above. This type is used facing the injection nozzle, B, against the other detection nozzle, A, and detecting the presence of objects by changes in pressure occurring when an object is between the two nozzles. Generally, with this type of nozzle, the detection nozzle bore is the same size or larger than the injection air nozzle bore.

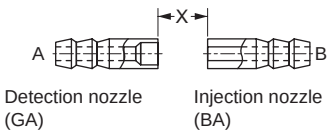

Fig. 4

● Turbulence

With respect to the opposing nozzles, by placing a 3rd nozzle “C” perpendicularly, this nozzle can detect unwanted objects between it and the other nozzles. The max. detection distance is 200 mm, longer than the detecting nozzle.
This can also be used as a detection nozzle for fluidics or air micrometers, or as a detection nozzle of a jig with a hole opened in the detection section.

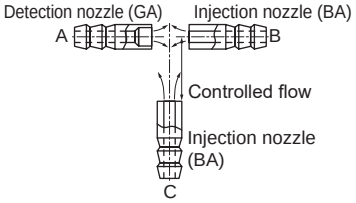

Fig. 5

How to order detection nozzle

APA4 - BA 03

Ⓐ Model

Ⓑ Nozzle port size

Planned for end of production November 2022

Code	Description
Ⓐ Model	
BA	For gauge
DA	Back pressure
VS	Reflection
GA	Detecting

Ⓑ Nozzle port size (mm)

Model		BA	DA	VS	GA
03	0.3	●	—	—	—
05	0.5	●	—	—	—
07	0.7	●	—	—	—
10	1.0	●	●	●	●
20	2.0	●	●	—	●
32	3.2	—	—	—	●

dimensions

● APA4-BA** (nozzle for gauge)

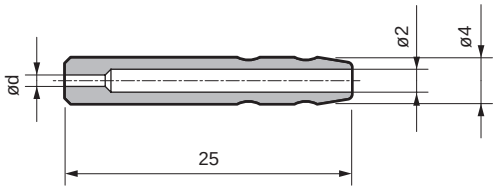

Model No.	ød	Weight g
APA4-BA03	0.3 mm	2
APA4-BA05	0.5 mm	2
APA4-BA07	0.7 mm	2
APA4-BA10	1.0 mm	2
APA4-BA20	2.0 mm	2

● APA4-DA10 (back pressure nozzle)

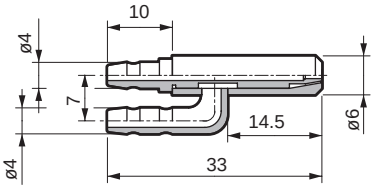

Weight: 7 g

● APA4-DA20 (back pressure nozzle)

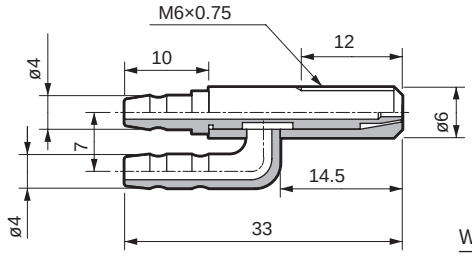

Weight: 7 g

● APA4-VS10 (reflection nozzle)

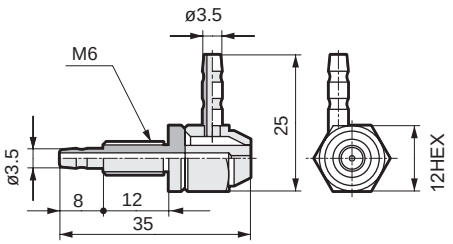

Weight: 14 g

● APA4-GA** (detecting nozzle)

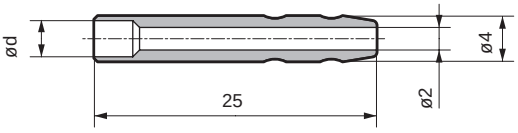

Model No.	ød	Weight g
APA4-GA10	1.0 mm	2
APA4-GA20	2.0 mm	2
APA4-GA32	3.2 mm	2

Selecting the nozzle bore

Fig. 6 on the right shows the relationship between the clearance between the nozzle and specimen (nozzle clearance) and the output pressure that moves the switching element float.
The curve's rising edges are steeper for the APA1-AA03 than the APA1-AA07. This means that when the fixed orifice is small, output pressure changes more under the same fluctuation, a, of nozzle clearance, X. The APA1-AA03's output pressure fluctuation, b, is greater than the APA1-AA07 output pressure fluctuation, c.)
Therefore APA1-AA03 is capable of more accurate switching even with extremely small dimensions. The response time of the APA1-AA03, with its smaller fixed orifice, is slower than the larger APA1-AA07 because the flow rate drops when the fixed orifice is small. In other words, APA1-AA07 is used when detection nozzle pressure is high (discharge rate: large), and APA1-AA03 is used when nozzle pressure is low, such as with detecting nozzles.

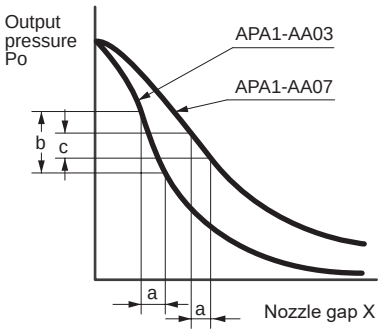

Fig. 6

Standard nozzle and switching element combination

Detection nozzle			Switching element
Type of nozzle	Model No.		Model No.
Nozzle for gauge	APA4-BA10 APA4-BA20		APA1-AA07
Back pressure nozzle	APA4-DA10,APA4-DA20		APA1-AA05
Reflection nozzle	APA4-VS10		APA1-AA05
Detecting nozzle	Injection side	Detection side	
	APA4-BA10	APA4-GA10	APA1-AA03
	APA4-BA10	APA4-GA20	APA1-AA03
	APA4-BA10	APA4-GA32	APA1-AA03

Nozzle measurement distance

Model No.	Measurement distance (mm)	
	For measuring dimensions	For presence confirmation
APA4-BA03 APA4-BA05 APA4-BA07 APA4-BA10 APA4-BA20	0.03 to 0.075 0.03 to 0.06 0.03 to 0.1 0.03 to 0.25 0.03 to 0.25	0 to 0.05 0 to 0.2 0 to 0.3 0 to 0.4 0 to 0.7
APA4-DA10 APA4-DA20	0.1 to 3.5 0.1 to 3.5	
APA4-GA10 APA4-GA20 APA4-GA32	0.1 to 30 0.1 to 100 0.1 to 150	
APA4-VS10	0.1 to 6.0	

*1: Special nozzles are available as made to order.
*2: Gauge nozzle and detecting nozzles manufactured by the user can be used.
*3: APA4-BA□ and APA4-GA□ are the same.

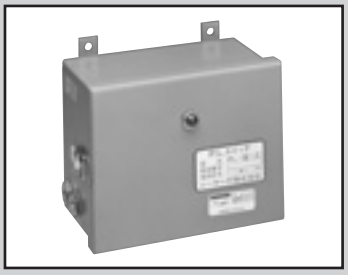

PL switch (PEL Series)

PL Series

Combination of PEL switching element, electrical wiring connection terminal, pneumatic piping terminal, or power circuit in one box

How to order

Planned for end of production November 2022

PL – 3 – 1 – AA03 – AC100V

- Ⓐ Model
- Ⓑ Number of PEL switching element
- Ⓒ Switching element
- Ⓓ Voltage *1

Code	Description	
Ⓐ Model		
1	PEL, terminal box, with indicator lamp	
3	PEL, terminal box, lamp, relay, with transformer	
Ⓑ Number of PEL switching element		
1	1	
2	2	
Ⓒ Switching element		
Blank	APA1-AA07	Standard
AA03	APA1-AA03	Made to order
AA05	APA1-AA05	
AA10	APA1-AA10	
05 VAC	APA1-AC05	
AK05	APA1-AK05	
AK07	APA1-AK07	
BL00	APA1-BL00	
Ⓓ Voltage		
AC100V	100 VAC 50/60 Hz	Standard
AC200V	200 VAC 50/60 Hz	Option
DC24V	24 VDC	

⚠ Precautions for model No. selection

*1: Indicate the voltage only for the PL-3.

Weight table

Model No.	Weight g	Model No.	Weight g
PL-1-1	1490	PL-3-1	2580
PL-1-2	1850	PL-3-2	3010

Internal structure and dimensions

● PL-1-1

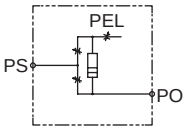

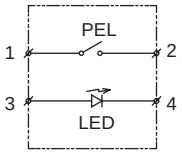

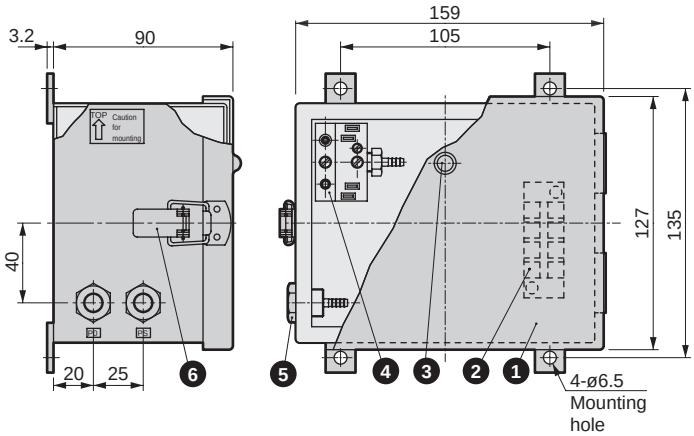

● PL-1-2

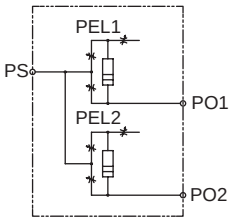

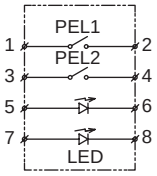

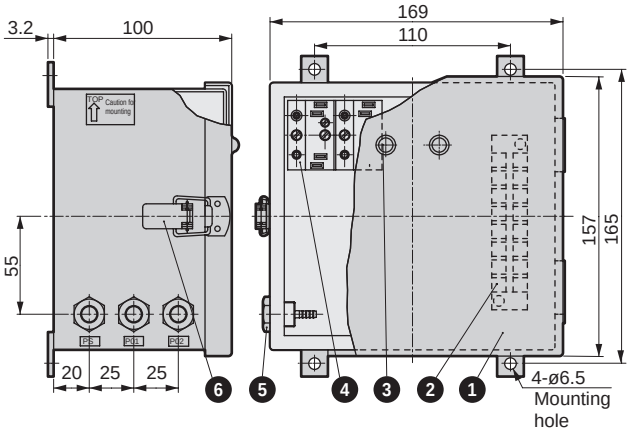

Parts list (PL-1-1 to PL-1-2)

No.	Part name	Quantity	Remarks
1	Box	1	Paint (Munsell code N5)
2	Terminal block	1	
3	Lamp	1(PL-1-1) 2(PL-1-2)	
4	PEL	1(PL-1-1) 2(PL-1-2)	
5	Panel union	2(PL-1-1) 3(PL-1-2)	Rc1/8
6	Snap lock	1	

Internal structure and dimensions

● PL-3-1

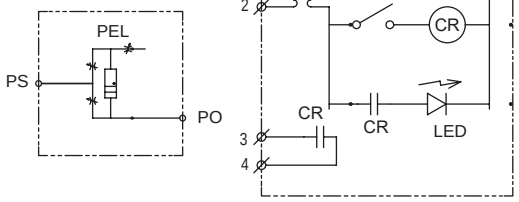

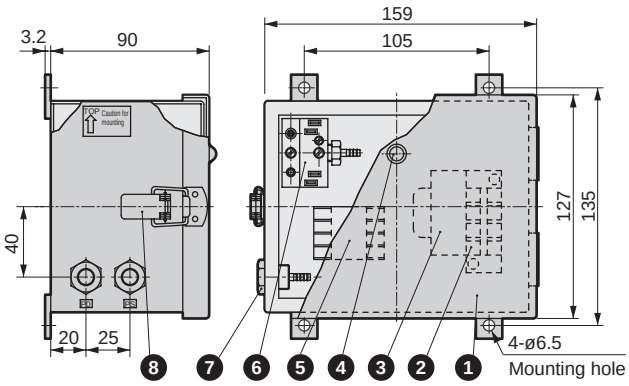

● PL-3-2

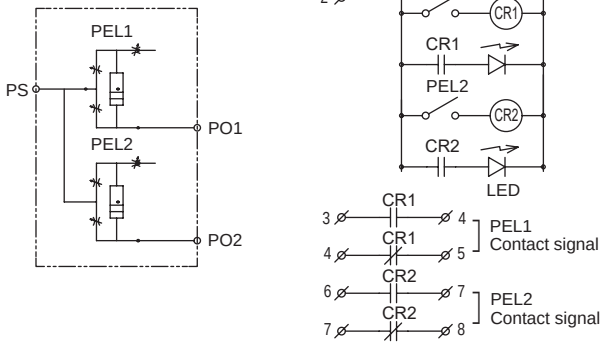

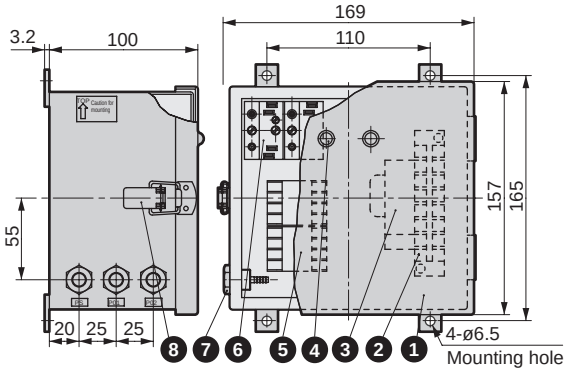

Parts list (PL-3-1 to PL-3-2)

No.	Part name	Quantity	Remarks
1	Box	1	Paint (Munsell code N5)
2	Terminal block	1	
3	Transformer	1	
4	Lamp	1(PL-3-1) 2(PL-3-2)	
5	relay	1(PL-3-1) 2(PL-3-2)	
6	PEL	1(PL-3-1) 2(PL-3-2)	
7	Panel union	2(PL-3-1) 3(PL-3-2)	Rc1/8
8	Snap lock	1	

MEMO

● PEL system characteristics

Type of nozzle		Nozzle for gauge				Reflection nozzle	Back press nozzle	Detecting nozzle
Measuring method		Gauging method	Inner/outer ø measuring	Sorting by dimension		Gauging method	Sorting by dimension	Drill fracture
Number of PEL		1	2	2 3 4 5		1	1	1
Circuits used		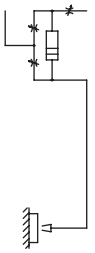	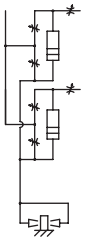	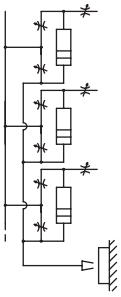		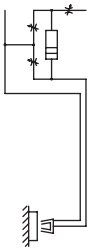	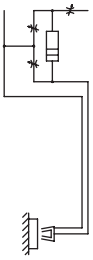	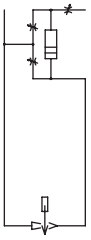
Switching element	APA1	AA07	AC05		AA03	AA05	AA05	AA03
Nozzle	APA4	BA10(BA20)				VS10	DA10	BA10 and GA32
Detectable range (mm)	Dimension confirm	0.03 to 0.25(0.03 to 0.25)				0.1 to 4	0.1 to 2	
	Presence confirm	0 to 0.40(0 to 0.70)				0.1 to 6	0.1 to 3.5	0.1 to 150
	Rating	0.15(0 to 0.25)				3	1	25
Response time (sec)	Min	0.05	0.1		0.2	0.14	0.04	0.02
	Average	0.5	1		2	1	0.6	0.2
	Max	1.5	2		4	2	2	2
Accuracy (hysteresis (mm)) Sample feed speed 0.2 µm/s		0.0015	0.002		0.004	0.4	0.03	-
		When X = 0.15				When X = 3	When X = 1	
Repeatability (reproducibility) (mm)		0.0002	0.001		0.002	0.05	0.01	-
		When X = 0.15				When X = 3	When X = 1	
Switching point fluctuation when primary pressure fluctuates from 0.13 MPa to 0.15 MPa		-0.001 When X = 0.15					-0.02 When X = 2	+10 X=100
Influence by surface finish (mm)		+0.002 when changed from ▽▽▽ (6 µ) finish to ▽▽ (25 µ) finish				-		-

● Measuring conditions
(1) The above data shows averages, and may differ slightly due to nozzle variation.
(2) The primary pressure must be 0.14 MPa.
(3) Response time measurement conditions apply when using ø3 bore, 500 mm long PVC tubing.
(4) The response time is double the above data when PVC tubing is 5000 mm long.
(5) The above data applies when the nozzle is moved in the direction of the emissions from the nozzle. However, the same characteristics are indicated even when the nozzle is moved at a right angle to the flow. The measurement distance may differ slightly.

Circuits used	Applications	Switching element	Nozzle	Air consumption rate ℓ/min (ANR)				
				P.S=0.05 MPa	0.1	0.15	0.2	0.3
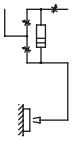	Workpiece confirmation Contact confirmation Dimension measurement	APA1-AA07	APA4-BA10	10	16	23	33	52
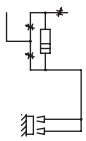			APA4-BA10 2 pcs.	11	17	26	35	54
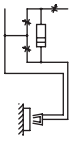	Workpiece confirmation Shape confirmation Position confirmation	APA1-AA05	APA4-DA10	20	34	52	69	112
			APA4-DA20					
			APA4-VS10	20	34	52	69	108
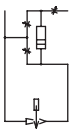	Drill fracture Edge control	APA1-AA03	APA4-GA10 APA4-GA32	15	24	35	45	72

PEL system troubleshooting

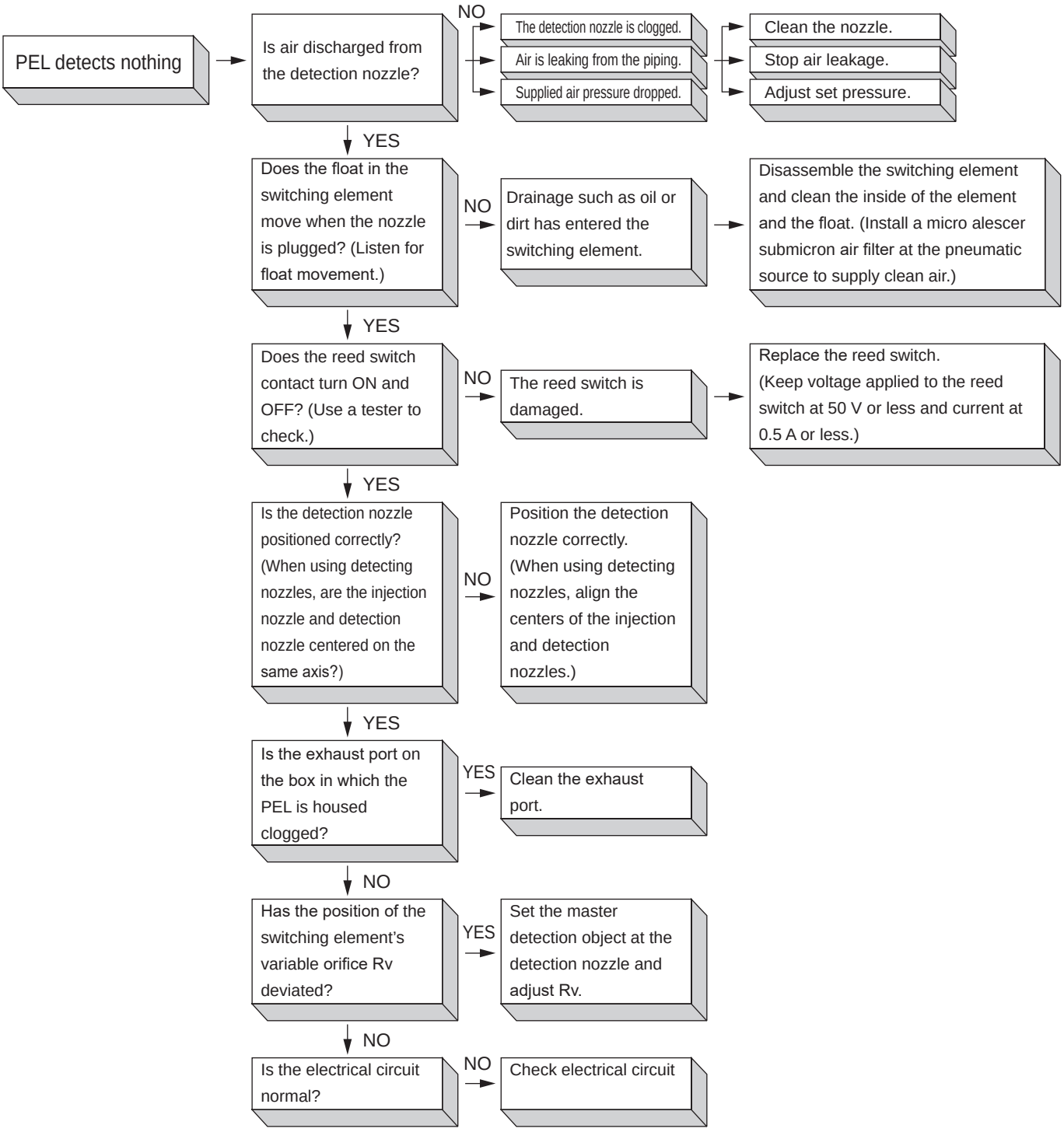



SEPEL switch

DPS Series

By integrating the micro differential pressure sensor into air bridge circuit,
· Suction confirmation from min. nozzle ø0.15
· Suction check when there is a leakage in the workpiece
● Piping bore size: ø2.5 to ø4

Specifications

Item	Specifications
Working fluid	Noncorrosive gas (Check for water)
Working pressure (PS supply port)	Negative pressure -20 to -101 kPa
Differential pressure	5 kPa
Max. differential pressure between A/B (Differential pressure of diaphragm chamber between A and B)	100kPa(DPS-05)
Ambient temperature	0 to 50°C (no freezing)
Operation precision	± 0.05kPa (12 VDC)(*1)
Max. response time	5 msec (0.005 sec))(*2) (The response time changes according to the external piping and sensor nozzle)
Hysteresis	0.06kPa (*1)
Power supply voltage	12 to 25 VDC
Current consumption	30 mA max. (at 25 VDC)
Output style	NPN open collector
Output rating	30 VDC 60mA
Vibration resistance	98m/S^2
Connection tube	Inner diameter ø2.5 to ø4
Lead wire	Shield wire 0.1mm^2 4-conductor (spare wire green) length 1 m
Temperature characteristics	±0.3% F.S./°C in the temperature range of 0 to 50°C
Weight	Body: 100 g, mounting plate: 40 g

*1: Using 12 VDC power supply voltage static measurement.
*2: Response time only for 12 VDC power supply voltage sensor body. (Excluding delay caused by piping and sensor nozzle.)

Planned for end of production November 2022

How to order

DPS – 05 – 05 – AK

SEPEL switch

Ⓐ Differential pressure range

Ⓑ Detection method/ inner orifice size Note

Ⓒ Adjustment needle

Code	Description
Ⓐ Differential pressure range	
05	5 kPa
Ⓑ Detection method/inner orifice size	
05	Pneumatic bridge/ø0.5 mm
07	Pneumatic bridge/ø0.7 mm
10	Pneumatic bridge/ø1.0 mm
00	Micro differential pressure/ø0.5 mm (Note)
Ⓒ Adjustment needle	
Blank	Built in
LN	Integrated (with lock nut)
AK	No

Selection criterion

Suction nozzle diameter	SEPEL Model
ø0.15 to ø0.5	DPS-05-05
ø0.5 to ø1.0	DPS-05-07
ø0.7 to ø1.4	DPS-05-10

Note: The adjustment needle is not available for a fine differential pressure.
(Display Ⓒ not required for model No.)

Dimensions

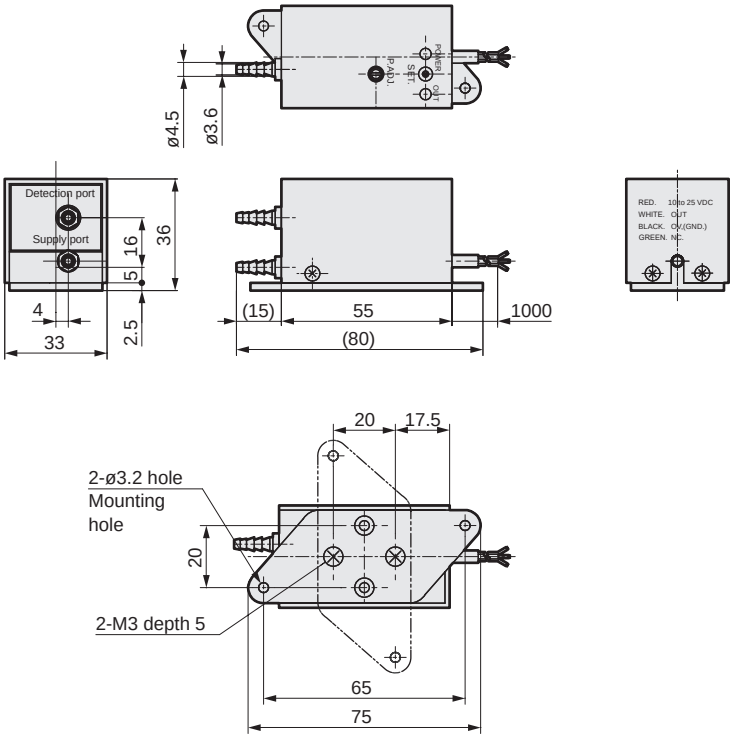

Operational principle

● Pneumatic bridge

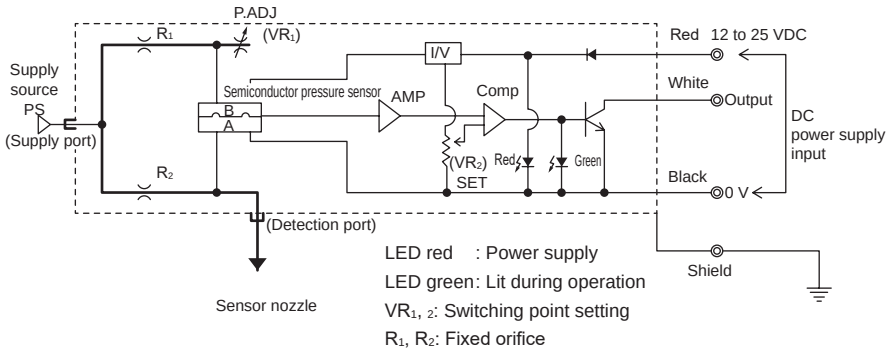

LED red : Power supply
LED green: Lit during operation
$VR_{1, 2}$: Switching point setting
R_1, R_2: Fixed orifice

● Operational explanation

When confirming suction, downward pressure is applied to the semiconductor pressure sensor when the workpiece is picked up if the adjustment needle (VR1) is the same diameter as or smaller than the sensor nozzle. Upward pressure is applied when the workpiece is released. This pressure is converted and amplified into an electrical signal with the semiconductor pressure sensor. When the switching point is set with the electric comparison circuit, a suction confirmation signal is outputted.

● Fine differential pressure

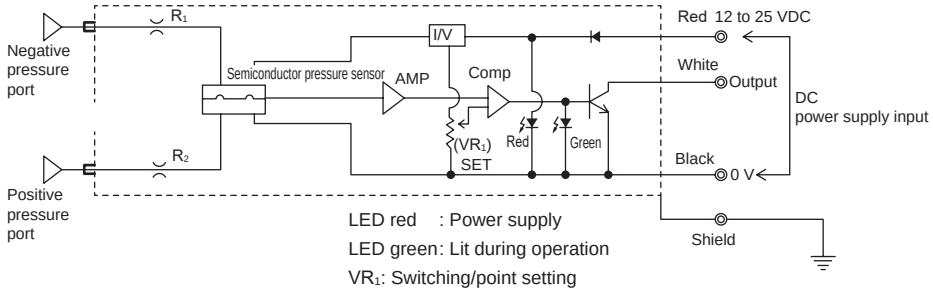

LED red : Power supply
LED green: Lit during operation
VR_1: Switching/point setting
R_1, R_2: Fixed orifice

Usage connection

● Relay connection method

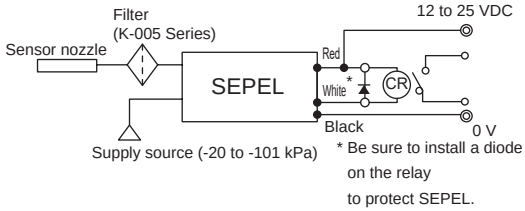

● TTL connection method

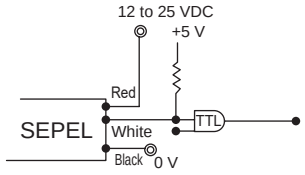

Air sensor

Filter

RoHS

● Vacuum filter (filtration rating: 5 μm)
Model No.: **K-005-1**



K-005 element model No.: 85-166
Weight: 98 g

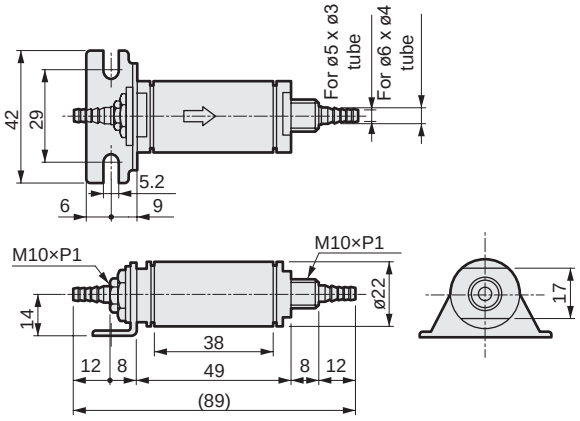

● Vacuum filter half size (filtration rating: 5 μm)
Model No.: **K-005H-1**



K-005H element model No.: 85-5160
Weight: 88 g

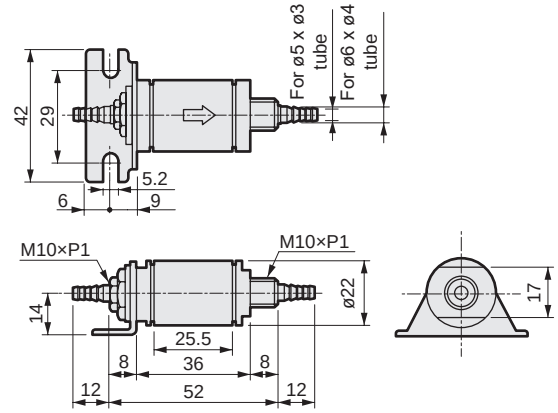

● M5 thread attached
Model No.: **K-005-M5, K-005H-M5**



Weight: 95 g, 85 g

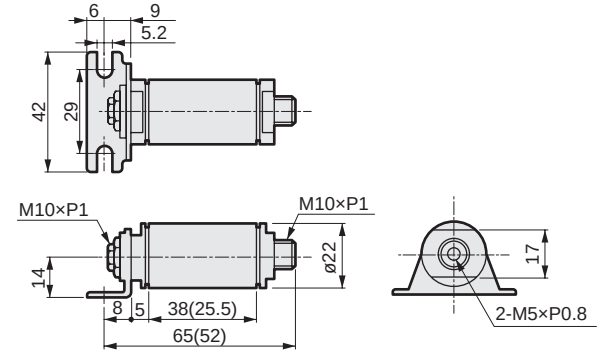

Dimensions shown in ( ) are for K-005H-M5.

● Female thread
Model No.: **K-005-6, K-005H-6**
Bore size: Rc1/8



Weight: 120 g, 110 g

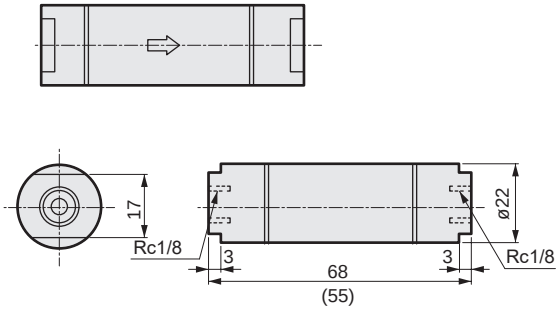

Dimensions shown in ( ) are for K-005H-6.

Piping instrument

RoHS

● 3-way fitting
Model No.: **APA6-3W-1**
Bore size: ø3, ø4



Weight: 8 g

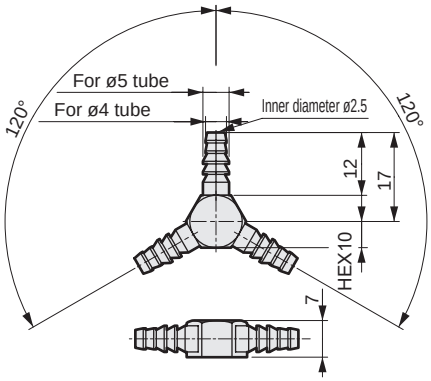

● Model No.: **APA6-TN03**



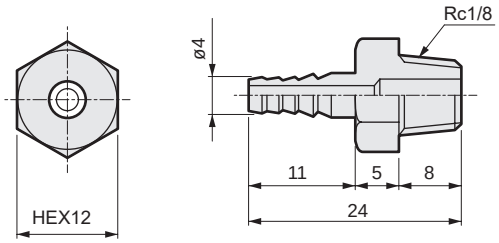

Weight: 10 g

● Model No.: **APA6-TN04**



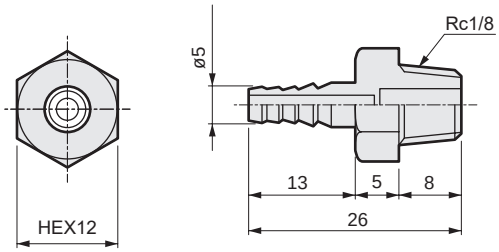

Weight: 10 g

● Part for cascade
Model No.: **APA6-CS10**
(The following parts are in a set.)

(1) Nipple
(for M6-ø3, ø4) 1 pc.

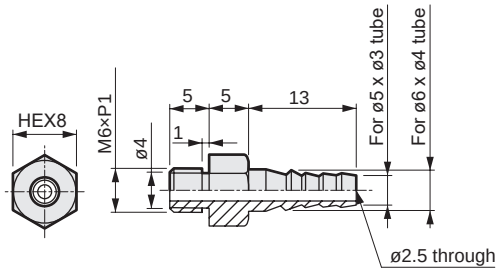

Weight: 7 g

(2) Packing 2 pcs.

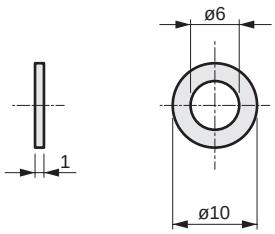

Weight: 0.1 g

(3) Plug (for M6) 1 pc.

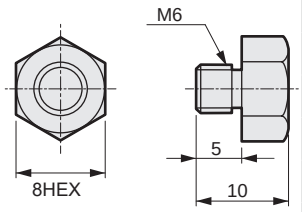

Weight: 3 g

Air sensor

Needle

RoHS

● Adjustment needle
Model No.: **APA6-FV10**



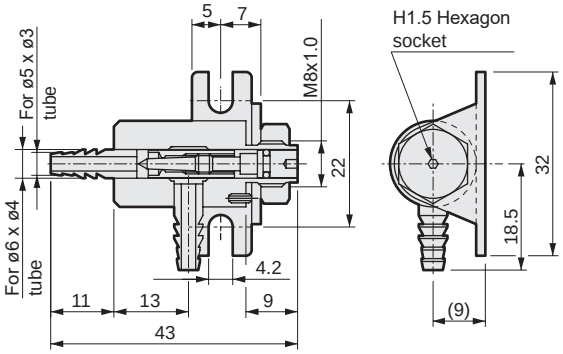

Weight: 39 g

Urethane tube

RoHS

● Urethane tube
Model No.: **46011-5 (transparent)**
I.D. x O.D.: ø3 x ø5
Temperature range -5 to 60°C



Pneumatic components (sensors)

Safety Precautions

Be sure to read this section before use.
Refer to Intro Page 63 for general precautions regarding pneumatic components and refer to "⚠ Safety precautions" for detailed precautions for individual series.

Product-specific cautions: Air sensor PEL/SEPEL Series

Design/selection

1. Common

⚠WARNING

■ Use the product in the range of conditions specified for the product.
Contact CKD when using the product outside specifications or for special applications.
- Use of the product exceeding the specifications range may result in insufficient performance, and safety cannot be guaranteed.

■ Confirm before use that the product will withstand the working environment.
- Cannot be used in environments where its functions will be impeded.
- The close contact confirmation switch is made primarily of aluminum and resin.
Do not use in atmospheres where corrosive gases are generated. Such environments include high temperatures, chemical atmospheres, where chemical liquids, vibration, moisture, water dripping, coolant, or gas is present; where ozone is generated; chemical plants, semiconductor pre-processing, outdoors, etc.

2. PEL Series

⚠CAUTION

■ Understand the characteristics of compressed air before designing a pneumatic circuit.
- The PEL switch has a float, which moves up and down with small differential pressure, and a small bore orifice. Use the following type of circuit, as these parts are susceptible to entry by foreign matter and oil.

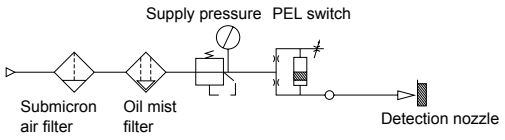

■ If cutting water and oil flow back from the detection nozzle, provide a constant air flow or use a solenoid valve with a needle to let in a small amount of air.

■ Check the PEL switch and detection nozzle combination.
Required functions may not operate if the combination is not correct.

■ The PEL switch does not have an operation monitor indicator.
Use a PL switch (boxed PEL switch) if a monitor indicator is required.

3. SEPEL Series

⚠CAUTION

■ The SEPEL switch is used to check vacuum suction. Use the following type of circuit to prevent dust from being sucked in from the suction pad (standard). Note that the filter cannot remove moisture. Check that moisture does not get into the circuit.

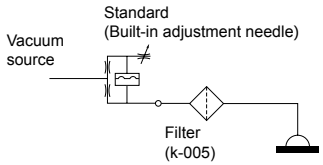

If the work area is very dusty, use the model with an external adjustment needle and provide a filter on the needle side.

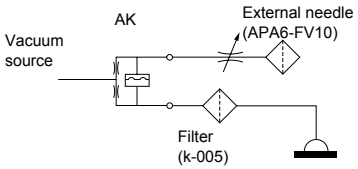

■ Use the following circuit to create a vacuum burst and check that pressure is not led to the SEPEL switch.

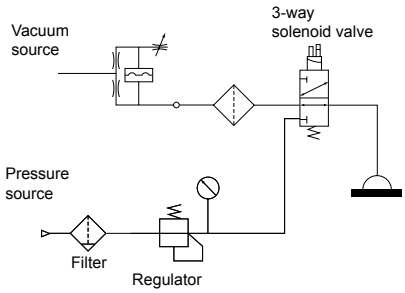

	Loading/unloading	During suction	Burst	
SEPEL	OFF	ON	ON	...For DPS-05
Solenoid valve	OFF	OFF	ON	

In the above table, an ON signal is issued at the break, the same as the suction signal ON state. Check suction with the signal issued when the solenoid valve is OFF.

■ If pressure is applied to the SEPEL switch at the vacuum burst, use DPS-10 (*1) with a large proof pressure.

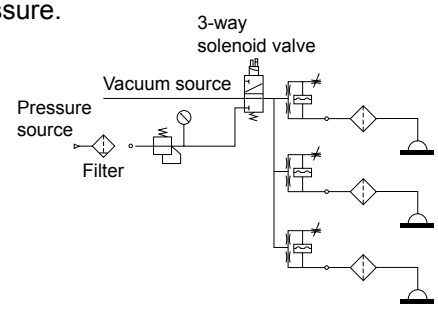

	Loading/unloading	During suction	Burst
SEPEL	OFF	ON	OFF
Solenoid valve	OFF	OFF	ON

…for DPS-10

The SEPEL signal turns OFF at the vacuum break, so the state is different from DPS-05.
(*1) DPS-10 is a made-to-order product.

■ Select the SEPEL switch based on the suction nozzle diameter size.

■ Select the type with an adjustment needle lock if using where vibration is generated.

Mounting, installation and adjustment

1. PEL Series

⚠ CAUTION

■ Observe the following items when installing.

- Install the PEL switch higher than the detection nozzle position to prevent cutting water and oil from entering.
- Provide enough space for adjustment, monitoring, and maintenance.
- Use a pipe with a bore of ø3 or more. Required functions may not operate if the fitting bore is too small.
- For piping, use rustproof material such as stainless steel, nylon, or urethane tubes.
- House the PEL switch in a box if it is to be used where mist or dust is generated. Provide an exhaust port so that atmospheric pressure is maintained in the box.
- The PEL switch has a high-precision finish. Do not damage the switch by hitting or bumping it.
- When connecting a fitting or other device, provide a sufficient compressed air flow and check that sealing tape or adhesive does not enter.
- "TOP" is stamped on the side of the PEL switch. Check that the "TOP" mark faces up when the switch is installed.

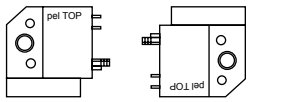

Proper positioning Incorrect positioning

- The PEL switch has a magnetic float and reed switch in the detection mechanism. The detection mechanism is adversely affected if magnetic material is placed near it. Do not place devices containing magnets, such as magnetic chucks or relays, near this switch.
- The PEL switch is assembled as follows when shipped. Change the base direction when the switch is installed.

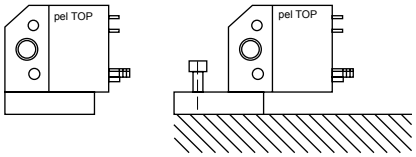

At shipment Installation state

- PEL switch response time is adversely affected by supply pressure and pipe length. For a fast response time, use a low supply pressure and short piping.
- The PEL switch responds more slowly than a photoelectric switch.
  Use a response time of two seconds for dimension measurement and a delay of 0.5 seconds to confirm the presence.

■ Note the following when wiring.

- When using a switching regulator for the power supply, ground the F.G. (frame ground).
- Be sure to use the enclosed connector for the PEL switch terminal. If the terminal is soldered directly, the reed switch could deform and break due to the heat.
- PEL switch contact capacity is 50 VAC/VDC or less, with a 50 mA or smaller current. Avoid overloads.

	Float up	Float down
Contacts 1-2	ON	OFF
Contacts 3-4	OFF	ON

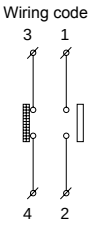

- Check PEL switch operation before installing the switch. Place a tester across contacts 1- 2 with the PEL "TOP" mark up and gradually move the "TOP" mark down. The float moves and contacts 1-2 change from OFF to ON. Repeat this operation with contacts 3-4 and confirm that the contact changes from ON to OFF.

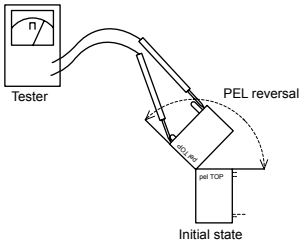

- When connecting to a relay, install a surge suppressor on the coil to protect the contact.

Mounting, installation and adjustment

CAUTION

■ Handling the adjustment needle

- The adjustment needle is set fully closed when the sensor is shipped. Turn the adjustment needle counterclockwise with the enclosed hexagon wrench. Sensitivity increases and the sensor turns ON more easily.
- Air for adjustment is discharged from the slit on the adjustment needle. The slit in the adjustment needle part is for air exhaust, not for a flathead screwdriver. Turning this slot with force damages the adjustment mechanism.

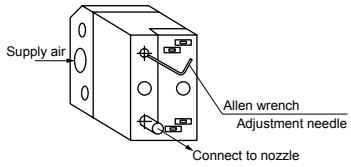

2. SEPEL Series

CAUTION

■ Installation precautions

- The adjustment needle trimmer is on top of the SEPEL. Allow enough space above the SEPEL sensor.
- Supply and detection ports tend to leak air, so apply adhesive. Scraps are generated and cause problems if ports are disconnected. Do not remove ports.
- Use a ø4 or ø3 bore urethane tube for piping.

■ Adjustment

1. Turn power ON and confirm that the red lamp lights.
2. Turn the SET screw, and see where the green lamp changes from ON to OFF. From that point, turn the screw 30 degrees counterclockwise. At that time check that the lamp turns OFF.
3. Apply a vacuum.
4. Suction up a workpiece, turn P. ADJ until the green lamp goes from OFF to ON, and determine point a.
5. Release the workpiece (the OUT lamp turns off). Counting the number of turns from point a, turn P. ADJ counterclockwise and find point b, where the lamp turns from OFF to ON.
6. The adjustment point is the most stable at the middle of points a and b, so turn P. ADJ clockwise from point b and set to the middle.

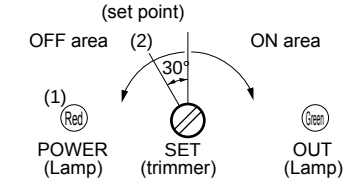

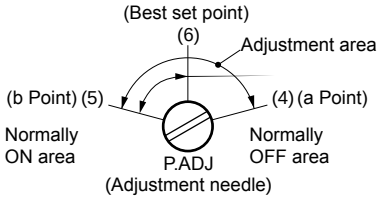

■ Be sure to connect a surge suppressor to the coil when connecting to a conductive load such as a relay.

■ Electrical wiring



Contacts consist of NO and NC contacts using two reed switches.
When using with NO contact, wire to... (1) (2)
When using with NC contact, wire to... (3) (4)

Contact capacity	Max. voltage 50 V AC/DC
	Max. current 0.5 A
	Max. power consumption 5W
	Rating 24 V AC/DC 0.2A

Use/maintenance

1. PEL Series

CAUTION

■ If the coolant from the nozzle accumulates in piping, the sensor may remain ON for a while. Wait for the coolant to be discharged by the detection air before starting the machine.

■ The sensor stays ON if the nozzle is clogged. Remove piping on the detection side of the PEL switch, and blow it out with compressed air from an air gun.

2. SEPEL Series

CAUTION

■ The sensor stays ON if the filter is clogged with dust or if exhaust resistance increases and creates a state similar to workpiece suction.
In this case, replace filter K-005 or the K-005H element.
Filter element No.
K-005 -- 85-166
K-005H -- 85-5160

■ The signal turns ON if piping breaks or if the detection nozzle is clogged.
The signal turns OFF if the pipe leaks. Detection is not possible in either case.

CPE/CPD
Pressure switch for coolant

■ **Pressure sensor components/pressure sensor**



Overview

These low- and high-pressure switches are compatible with coolant.
The diaphragm structure used at pressurized section achieves superior stability, so the product can be used to check the pressure of coolant in tooling machines, and to check the pressure of water or oil in other industrial machines.

Features

Degree of protection IP65 equivalent (dust proof/jet proof)

The high-pressure switch incorporates an electronic structure, enabling highly accurate detection and setting.

CONTENTS

● Mechanical pressure switch for coolant (for low pressure) CPE 1340
● Electronic pressure switch for coolant (with digital display) CPD 1342
⚠ Safety precautions 1348



Mechanical pressure switch for coolant (for low pressure)

CPE Series

● Pressure adjusting range: 0.05 to 0.8 MPa

RoHS CAD

JIS symbol

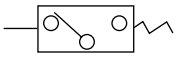

Specifications

Item	CPE
Working fluid	Coolant, air, other non-corrosive liquids, gases
Rated pressure MPa	0 (≈0 psi, 0 bar) to 1.0 (≈150 psi, 10 bar)
Proof pressure (water pressure) MPa	1.5 (≈220 psi, 15 bar)
Pressure adjusting range MPa	0.05 (≈7.3 psi, 0.5 bar) to 0.8 (≈120 psi, 8 bar)
Fluid temperature °C	0 (32°F) to 50 (122°F)
Ambient temperature °C	0 (32°F) to 50 (122°F)
Port size	Rc1/4
Micro switch	Z-15GD-B (OMRON)
Contact array	1ab
Hysteresis MPa	0.04 (≈5.8 psi, 0.4 bar) or less (set pressure 0.05 (≈7.3 psi, 0.5 bar) to 0.3 (≈44 psi, 3 bar))
	0.1 (≈15 psi, 1 bar) or less (set pressure 0.31 (≈45 psi, 3.1 bar) to 0.8 (≈120 psi, 8 bar))
Repeatability MPa	±0.02 (≈2.9 psi, 0.2 bar)
Max operation frequency /min.	20
Rated voltage	100 VAC, 200 VAC, 24 VDC
Insulation resistance MΩ	100 or more (with 500 VDC megger)
Weight kg	0.58
Mounting orientation	Vertical direction with the adjusting screw up
Degree of protection	IP65 (dust proof/jet-proof) equivalent

Micro switch rated

Load circuit		Non-inductive load (A)				Inductive load (A)			
		Resistance load		Lamp load		Inductive load		Electric motor load	
		N.C	N.O	N.C	N.O	N.C	N.O	N.C	N.O
Voltage	125 VAC	15		3	1.5	15		3	2.5
	250 VAC	15		2.5	1.25	15		3	1.5
	30 VDC	6		3	1.5	5		5	2.5

How to order

CPE - 8 - 0 G - 3

- CPE — Model No.
- 8 — A Connection port
- 0 — B Sealant
- G — C Switch
- 3 — D Lamp

Code	Description
A Connection port	
8	Rc1/4 downward
B Sealant	
0	Nitrile rubber
B	Fluoro rubber
C Switch	
G	Standard
D Lamp	
1	For 100/200 VAC
3	For 24 VDC

Internal structure and parts list

● CPE

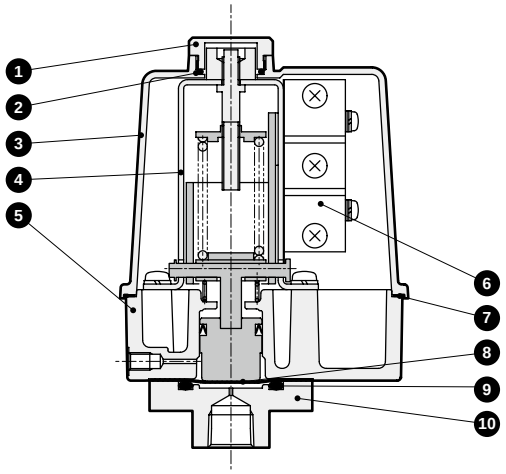

No.	Part name	Material	
1	Cap	A 5056	Aluminum
2	O-ring	NBR	Nitrile rubber
3	Cover	ABS	ABS resin
4	Frame	SPC	Steel
5	Body	ADC12	Aluminum die-casting
6	Micro switch	-	-
7	Gasket	NBR	Nitrile rubber
8	Diaphragm	NBR(FKM)	Nitrile rubber (fluoro rubber)
9	O-ring	NBR(FKM)	Nitrile rubber (fluoro rubber)
10	Port	SUS 303	Stainless steel

Options are shown in ( ).

Dimensions CAD

● CPE

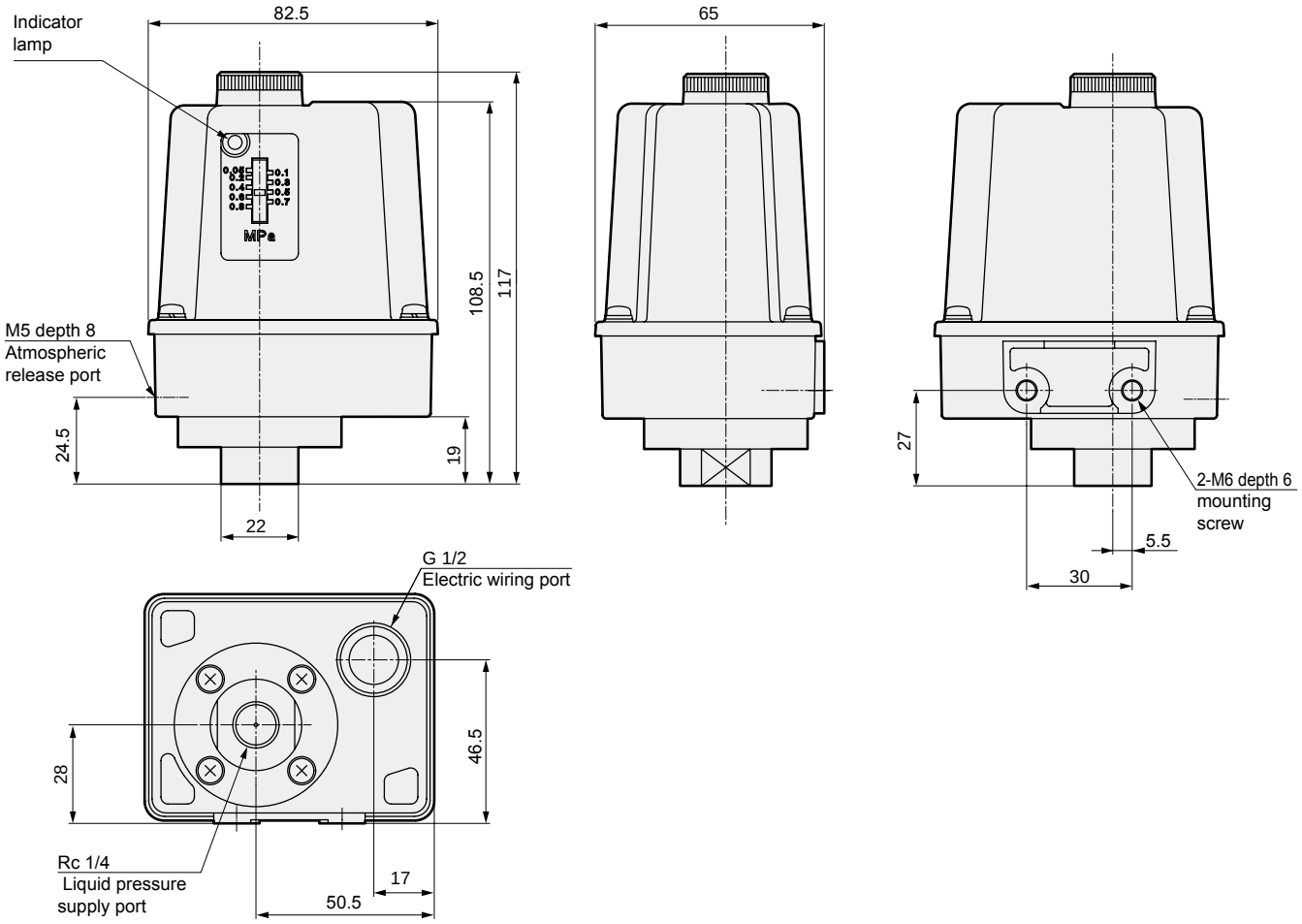



Electronic pressure switch for coolant (with digital display)

CPD Series

● Pressure adjusting range: 0 to 7 MPa

RoHS CAD

JIS symbol

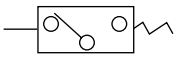

Specifications

Item	CPD
Pressure sensitive element	Stainless steel diaphragm pressure sensor
Working fluid	Coolant/other non-corrosive fluids
Rated pressure MPa	0 (≈0 psi, 0 bar) to 7 (≈1000 psi, 70 bar)
Proof pressure (water pressure) MPa	10.5 (≈1500 psi, 105 bar)
Pressure adjusting range MPa	0 (≈0 psi, 0 bar) to 7 (≈1000 psi, 70 bar)
Fluid temperature °C	0 (32°F) to 50 (122°F)
Ambient temperature °C	0 (32°F) to 50 (122°F)
Ambient humidity %RH	0 to 85 (no condensation)
Port size	Rc1/4
Display	3-digit LED display, character height 8 mm
Display accuracy (25°C)	±2% F.S. (±0.14 MPa (≈20 psi, 1.4 bar))
Temperature characteristics (0 to 50°C)	±4%F.S. (±0.28 MPa (≈41 psi, 2.8 bar))
Repeatability MPa	±0.02 (≈2.9 psi, 0.2 bar)
Power supply voltage	12 to 24 VDC ± 10% (ripple rate 1% or less)
Current consumption mA	50 or less
Output response time msec	Approx. 5
Switch output	NPN transistor open collector output 2 points
Switch output current mA	MAX 50
Switch output voltage drop V	2.4 or less
Set value hold	EEPROM
Lead wire	Oil resistant vinyl cable 4-conductor (0.2 mm^2) 1 m
Weight kg	0.36
Mounting orientation	Unrestricted
Degree of protection	IP65 (dust proof/jet-proof) or equivalent

How to order

CPD - **P70** **N** - **8**

- CPD — Model No.
- P70 — Ⓐ Rated pressure
- N — Ⓑ Switch output
- 8 — Ⓒ Connection port

Code	Description
Ⓐ Rated pressure	
P70	0 to 7 MPa
Ⓑ Switch output	
N	NPN transistor output 2 point
Ⓒ Connection port	
8	Rc1/4 downward

Dimensions

● CPD

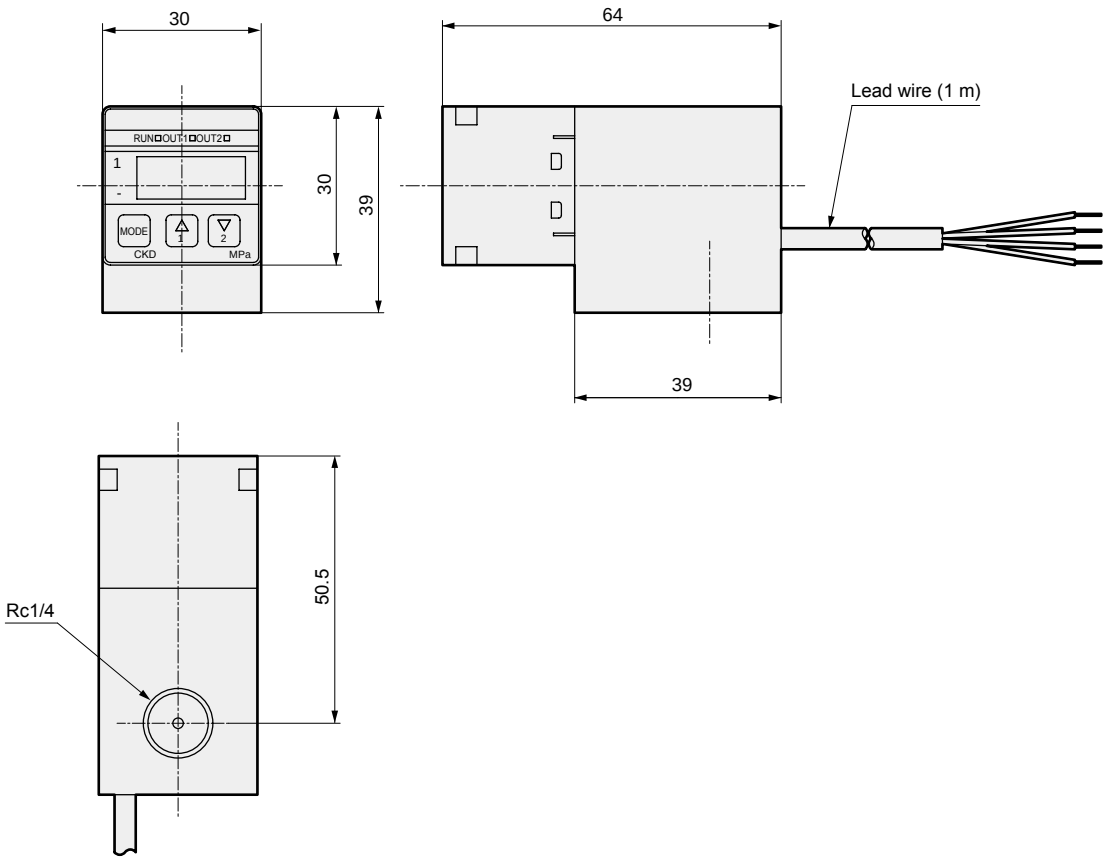

Wiring method

Cannot be disassembled

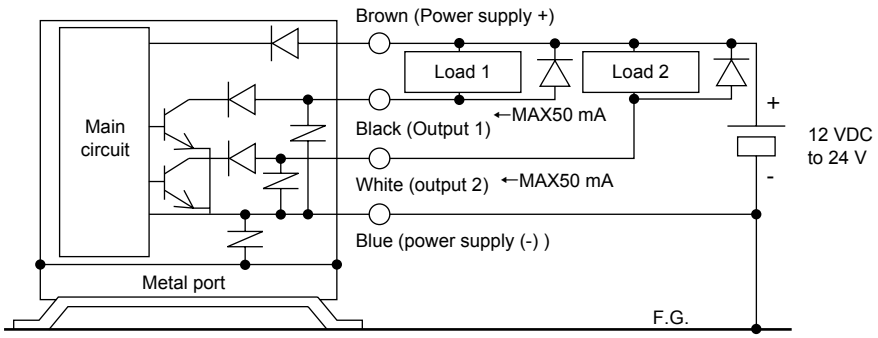

Display and function

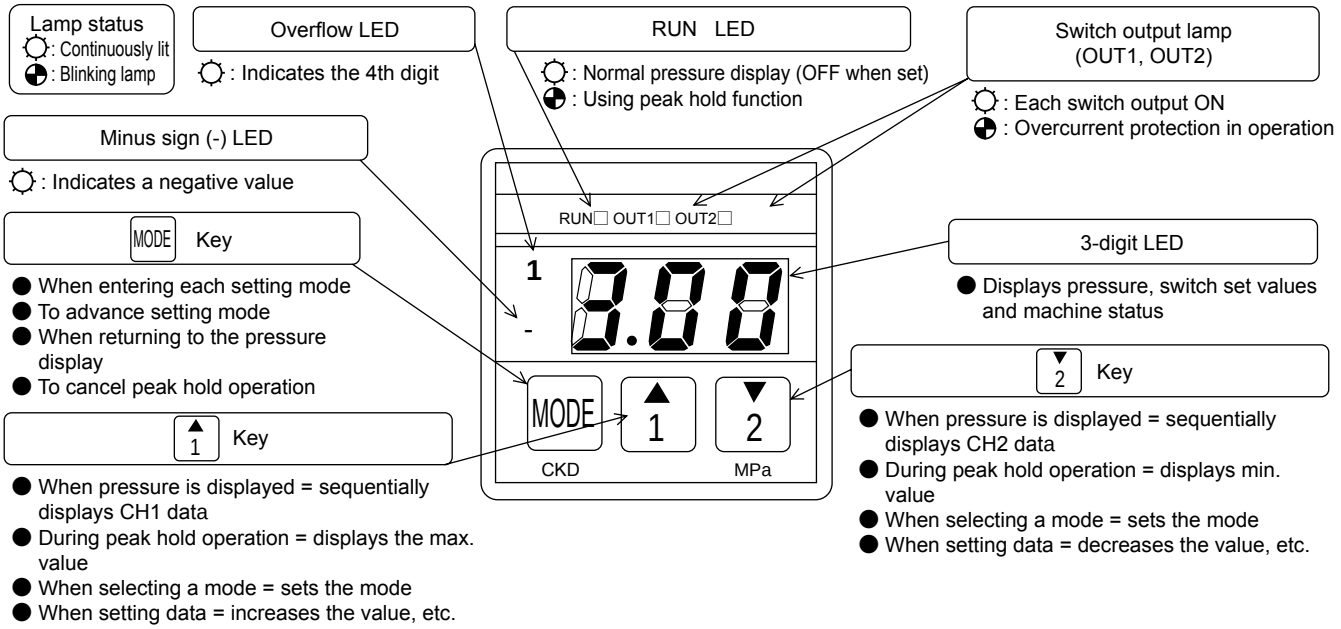

LED display

Numbers and letters are displayed with a combination of LED displays.

Numerals	0	1	2	3	4	5	6	7	8	9
Display	0	1	2	3	4	5	6	7	8	9

Numerals	A	B (b)	C	D (d)	H	I (i)	J	L	N (n)	O (o)	P
Display	A	b	C	d	H	i	J	L	n	o	P

Confirmation of set value

By pressing each key during pressure display, the switch data ON setting/OFF setting/operation waveform, zero point adjustment value, pressure range, and output can be confirmed.
Switch operation is not affected during the following operation.

CH1 data display

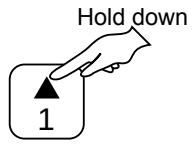

CH2 data display

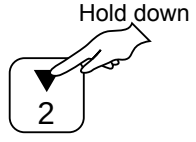

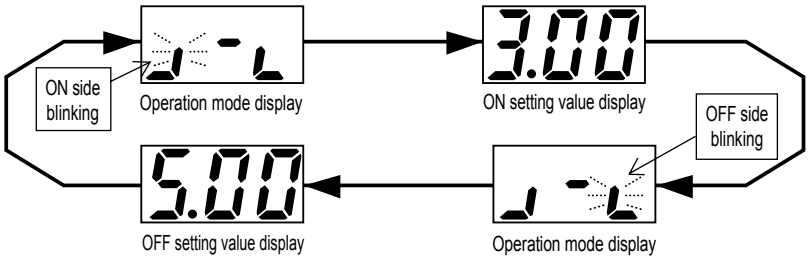

Zero point adjustment value/model No. display

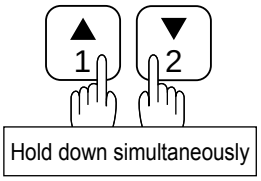

The zero point adjustment value and model No. are displayed alternately.
The switch operation is not affected during this operation.



Operation method of each function

Peak hold function

The max. and min. pressure values over a given period can be displayed.
Use this to check the stability of source pressure and working pressure, etc. The peak hold operation does not affect this product's basic functions such as switch operations or pressure display.

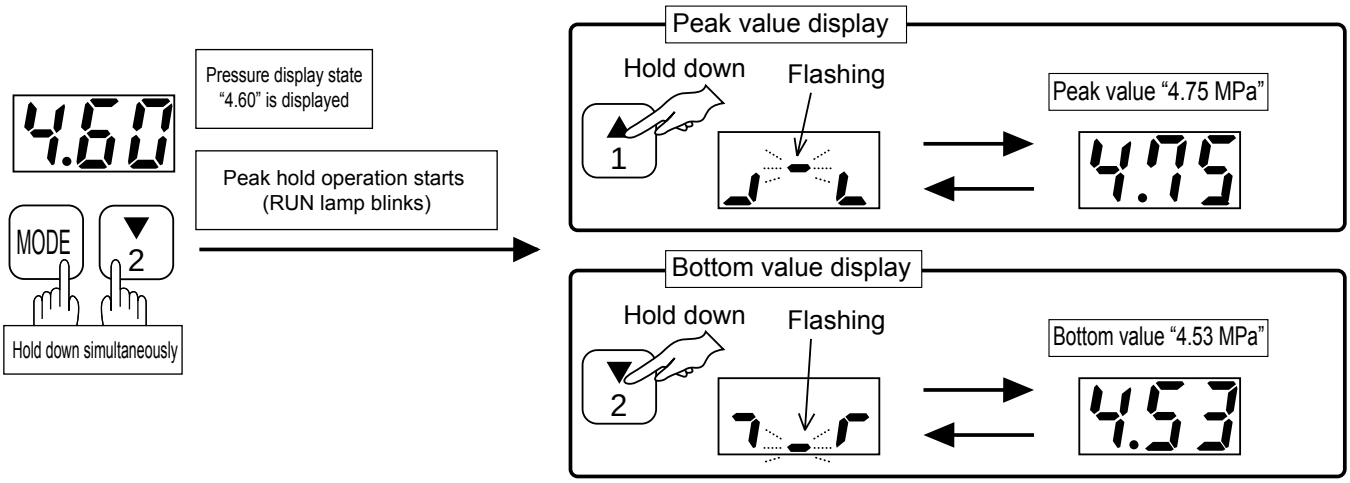

Switch output function

Refer to following page for operation method.

The CPD has 2-point switch output and operates in four modes and stopping. The switch is started by setting the required operation mode (refer to the switch operation mode on page 1347) and by making two settings, ON and OFF, that regulate the operation pressure.
Determine the required operation mode and ON and OFF setting values before making settings.
Select and set the following data to operate the switch.

CH1: Operation mode	CH1: ON set value	CH1: OFF set value
CH2: Operation mode	CH2: ON set value	CH2: OFF set value

Switch output test function

Refer to following page for operation method.

Use this function to forcibly turn the switch output ON and confirm the wiring connection or initial operation of the input device.

*1: Use this test function to check the wiring connection and input device operation. Avoid using this function instead of actual signals when executing the sequence program while the machinery and equipment are operating.

Zero point adjustment function

Refer to following page for operation method.

Deviation of the display from the zero point is compensated in the atmospheric pressure pressurized state.

*2: The above settings and test significantly affect the output signal and display. Before this operation, be sure to stop the machinery and equipment using this product and confirm that safety can be ensured in case of incorrect operation or display. Using this function while the machinery and equipment are operating is dangerous and may cause incorrect operation or display.
*3: To avoid incorrect operation, all keys must be held down for a set time to select the mode.

Operation chart for switch output function/forced output function/zero point adjustment function

For safety, if no key is operated for two seconds or more before the mode is set, the pressure display is redisplayed.

When the MODE key is held down longer, the pressure is redisplayed.

Basic key operation

These key operations are valid in the switch operation pattern setting, ON/OFF setting, and zero point adjustment mode.

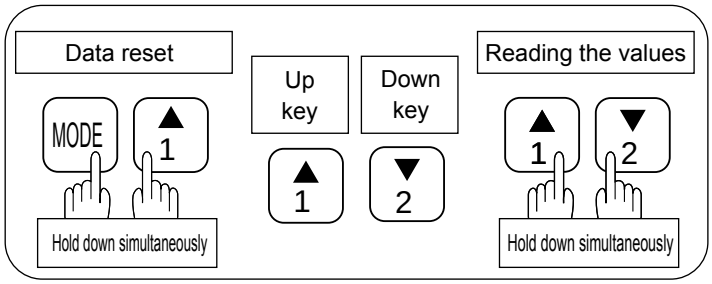

Setting data for the switch output function

Switch output forced ON mode

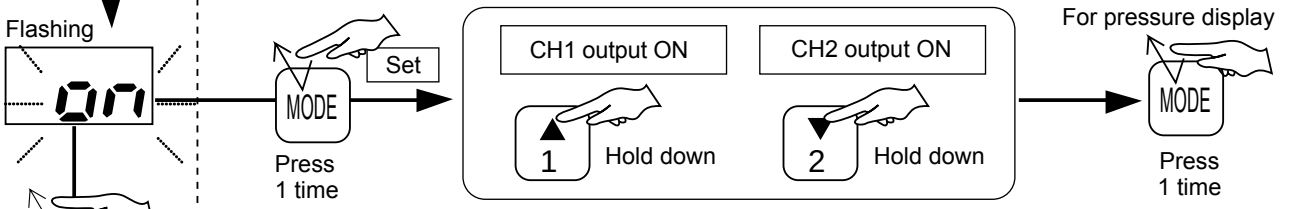

Zero point adjustment mode

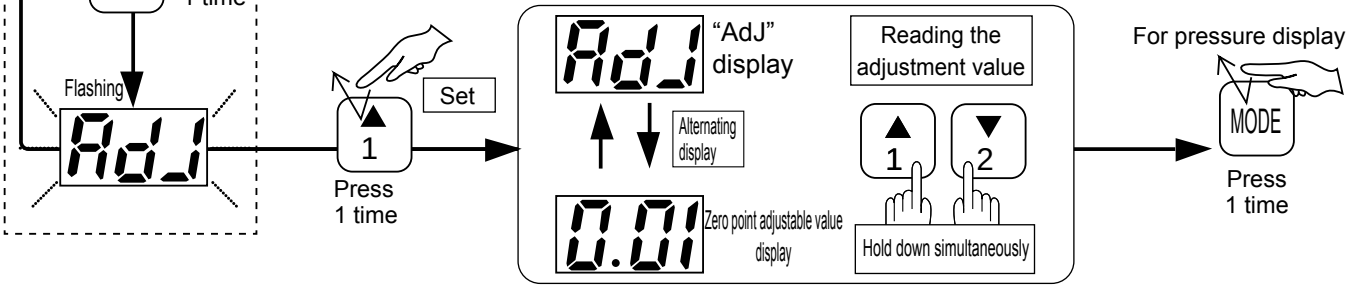

Switch operation mode

Operation mode name	Operation waveform	LED operation waveform display	Applications
1 Window operation 1 (ON when inside the range)	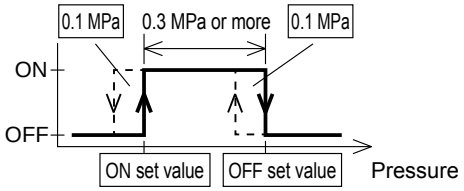	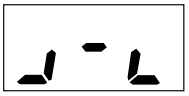	The ON signal will be output as a normal signal if the pressure is within the appropriate range.
2 Window operation 2 (ON when outside the range)	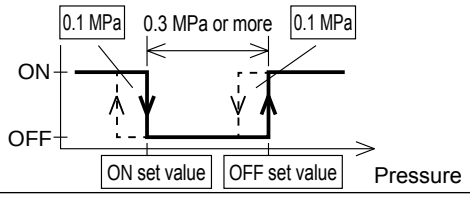	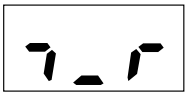	The ON signal will be output as an error signal if the pressure is an abnormal value.
3 Hysteresis operation 1 (ON at low pressure)	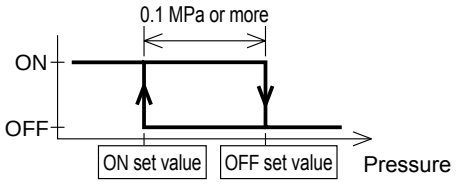		The ON signal will be output if the pressure has sufficiently dropped.
4 Hysteresis operation 2 (ON at high pressure)	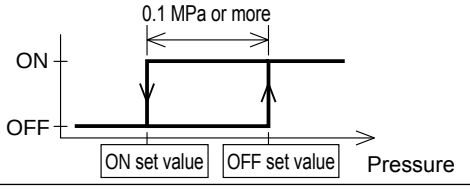		The ON signal will be output if the pressure becomes sufficiently high.
5 Stop operation	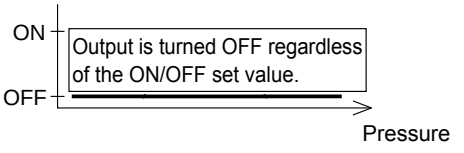	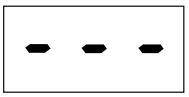	When not using the switch output, stop the operation to prevent damage and accidents.

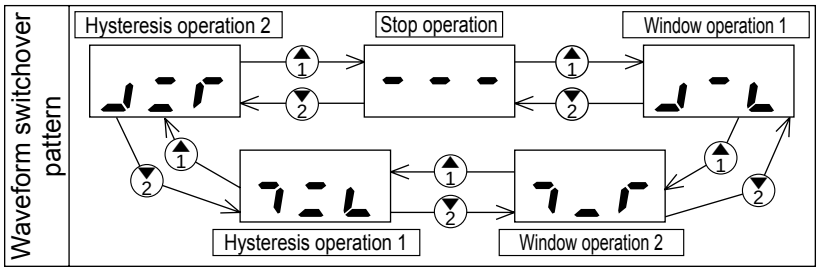

*1: For window operation, provide an interval of 0.3 MPa or more between the two set values.
A hysteresis of 0.1 MPa is automatically added to each ON and OFF.

*2: For hysteresis operation, provide an interval of 0.1 MPa or more between the two set values.
If the two settings are the same, operation may not take place or may be unstable.

*3: The left side of the operation waveform indicates negative pressure and the right side positive pressure.

*4: The magnitude relation of the ON set value and OFF set value is determined when the operation mode is determined, and cannot be reversed. With this product, however, operation of the designated operation pattern is the priority. When two setting values are input, the device automatically judges their magnitude and assigns them setting values as ON and OFF accordingly. Thus, even if ON and OFF setting values are input in reverse by mistake, they will be corrected and operation will take place in the specified mode.

Fluid Control Components: Warnings and Cautions

Be sure to read this section before use.

Precautions for each model series: product-specific cautions

Mechanical pressure switch for coolant (for low pressure) CPE Series

⚠ CAUTION Design/selection

1 The lamp is connected to the micro switch's NC and NO terminals. An extremely small current flows even when the load (relay, etc.) is not energized, so take care when selecting the load.
100 VAC 1.5 mA 200 VAC 2.0 mA
24 VDC 1.5 mA

2 Select with considerations to rush current.
Micro switch contact specifications

Rush current	Normally closed circuit	Max. 30 A
	Normally open circuit	Max. 15A

Starting current should be measured beforehand.

3 Never use this product in an explosive gas atmosphere.

- The pressure switch does not have an explosive-proof structure. Never use in an explosive gas atmosphere as explosions or fires could result.

⚠ CAUTION Mounting, installation and adjustment

1 Install a damper, absorber or accumulator as necessary if the water hammer, rush pressure or pulsation must be reduced.
Pressure exceeding the proof pressure could damage the CPE even if the proof pressure is exceeded momentarily.

2 Atmospheric release port

- · When trouble occurs in the diaphragm, the fluid is discharged from the atmospheric release port to prevent the fluid from entering wiring components. Pipe the atmospheric release port to a place where no problem occurs even if the fluid is discharged into the atmosphere at atmospheric pressure.
- · Take appropriate measures to prevent coolant fluid or dust from entering from the atmospheric release port.

3 To wire the switch, loosen cover tightening screws, remove the cover, and wire to the micro switch inside.

4 Check that internal wiring does not touch moving parts. Switch accuracy could be adversely affected.

5 The cover is made of ABS resin, so avoid use in hot areas. Hold the port section when piping and installing.

6 Pressure setting method

- · Remove the cap on the top of the cover, loosen the nut, and set pressure with the adjusting screw. The set pressure rises when the nut is turned to the plus (+) side and falls when turned to the minus (-) side. (Required tools: 13 m/m wrench, flathead screwdriver)
Fix with a nut after setting.
- · The scale plate is for reference. (scale error: within ±0.05 MPa). Use a separate pressure gauge for confirmation when precise setting is required.
- · The pressure displayed with the scale plate is the value when the switch is turned ON.

7 To turn the lamp ON at the set pressure or lower, and OFF at the set pressure or more, wire to the micro switch COM terminal and NC terminal. Attach the Pressure Rise → Lamp ON plate at a visible place of the cover.
(Refer to Fig. 1)

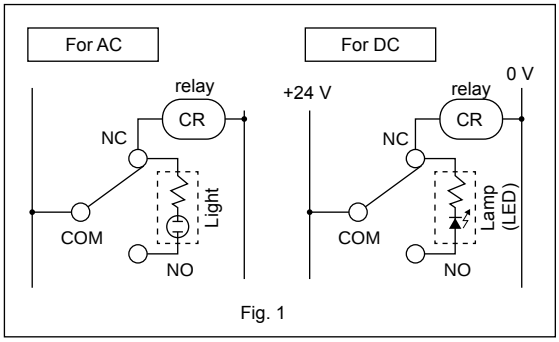

Fig. 1

8 To turn the lamp ON at the set pressure or lower, and off at the set pressure or more, wire to the micro switch COM terminal and NO terminal. Attach the Pressure Rise → Lamp OFF plate at a visible place of the cover.
(Refer to Fig. 2)

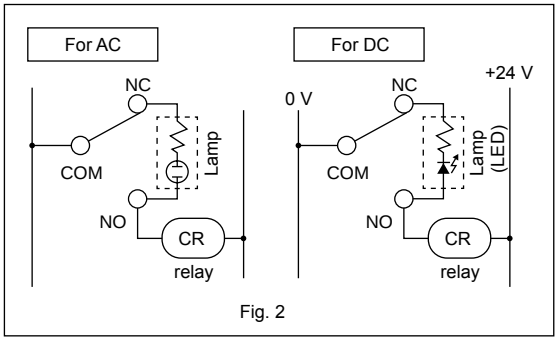

Fig. 2

Safety precautions

Fluid Control Components: Warnings and Cautions

Be sure to read this section before use.

Precautions for each model series: product-specific cautions

Electronic pressure switch for coolant (with digital display) CPD Series

⚠ WARNING Design/selection

1 Use this product in accordance of specifications.
- Use for applications, or at load currents, voltages, temperatures, impacts or sites outside of the specifications could result in damage or malfunctions.

2 Do not use with high pressure gas.
- This product is not approved under the High Pressure Gas Safety Law. Do not use for devices subject to the High Pressure Gas Safety Law.

3 Never use this product in an explosive gas atmosphere.
- The pressure switch does not have an explosive-proof structure. Never use in an explosive gas atmosphere as explosions or fires could result.

4 Be careful of internal voltage drop.
- When using with a voltage less than the specified voltage, the pressure switch may be activated correctly, but the load may not function correctly. Check the load working voltage to see that the following expression is satisfied:

Power supply voltage - internal voltage drop > load working voltage

⚠ CAUTION Design/selection

1 This product self-diagnoses the internal circuit immediately after power is turned ON, so pressure is not detected immediately. Set the control circuit so signals are ignored for 2 seconds after power is turned ON.

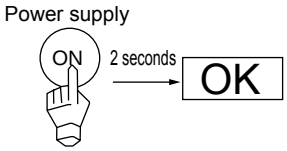

2 This product's overcurrent protection turns the output OFF when an overcurrent is detected. However, the output is repeatedly turned ON for a short time at a set cycle. This causes power supply voltage to fluctuate and may adversely affect peripheral devices. We ask for your understanding in this matter

3 Determine the setting taking error caused by accuracy and temperature characteristics into consideration.

4 Take care when using this product for an interlock circuit.
- When using the pressure switch for an interlock signal requiring high reliability, provide a double interlock by installing a mechanical protection function or a switch (sensor) other than a pressure switch as a safeguard against failure.

  Regularly inspect and confirm that the interlock activates correctly.

5 Take the following countermeasures to prevent malfunction caused by noise.
- Install a line filter in the AC power supply line.
- Use a surge suppressor such as a CR or diode on the inductive load (solenoid valve, relay, etc.) and remove noise from the source.
- Separate wiring from strong magnetic fields.
- Connect wiring with shielded wire.
- Ground the shield wire on the power supply side.

6 Working environment
- Check the temperature of fluid being measured and the environmental temperature in piping.

7 Circuit and connection method

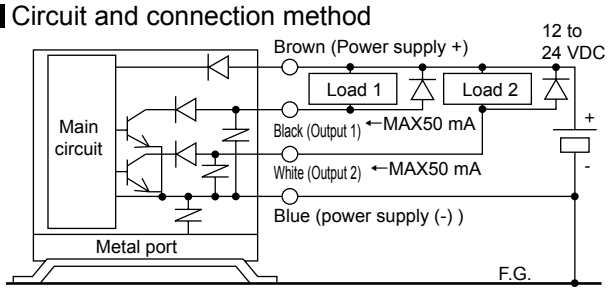

- Install the CPD on a frame or panel connected to the frame ground (F.G.) and, if necessary, directly connect from the CPD port to the F.G. When leading fluids in from an external device, connect via a relay fitting connected to the F.G. (To provide safety when using conductive fluids)

- This CPD power supply is a DC stabilized power supply completely isolated from the AC primary side. Connect either the "+" side or "-" side of the power to the F.G. A varistor (limit voltage approx. 40 V) is connected between the internal power circuit and port installation section of this CPD to prevent dielectric breakdown of the sensor. Avoid withstand voltage and insulation resistance tests between the CPD's internal power supply circuit and port installation section. Disconnect CPD wiring first if this testing is required. An excessive potential difference between the CPD power supply and port installation section could burn internal parts.

  After installing, connecting and wiring the CPD, electrical welding of the device/frame, short-circuit accidents, etc., could cause welding current, excessively high voltage caused by welding, or surge voltage, etc., to run through the wiring, ground wire, or fluid path connected between the above devices, damaging wires or devices. Conduct any work such as electrical welding after removing this device and disconnecting all electric wires connected to the F.G.

Precautions for each model series: product-specific cautions

Electronic pressure switch for coolant (with digital display) CPD Series

⚠ WARNING Mounting, installation and adjustment

1 Avoid incorrect connection.

- Incorrect connection could result in fatal damage not only to the product itself but also to peripheral devices.

⚠ CAUTION Mounting, installation and adjustment

■ Wiring

1 Use a DC stabilized power supply within the rating that is insulated from the AC power supply. A non-insulated power supply could result in electrical shock. If the power supply is not stabilized, the peak voltage could exceed the rating, damaging the product or compromising accuracy.

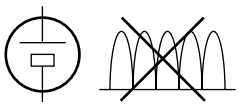

2 Stop the control unit, machinery and equipment and turn the power OFF before wiring. Starting operation immediately after wiring could result in unpredictable and dangerous operation. Conduct an energized test with the control unit, machinery and equipment stopped, and check switch data and unit settings before starting operation.



3 Turn power OFF before wiring this product. Discharge static electricity from personnel and tools before and during work.

4 Use a stabilized noise-free power supply with a ripple voltage 1% or less.

5 Install the product and wiring as far away as possible from sources of noise such as power distribution wires. Take separate measures against surge generated from inductive loads that enters the power wire.

6 Do not start the control unit, machinery and equipment immediately after wiring. Unpredictable signals could be output due to incorrectly set values. Conduct a power ON test with the control unit, machinery and equipment stopped, and set required switches.

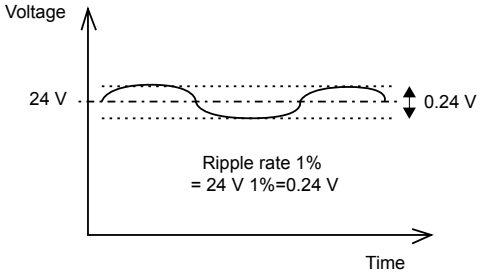

7 Sufficiently flush the piping before connecting. Prevent pipe from catching tips of sealing tape when piping.

8 When connecting pipes, wrap sealing tape in the opposite direction from the threading, from the inside position to within 2 mm from the pipe end.

- If sealing tape protrudes from the pipe threads, it could be cut when screwing the bolts in. This could cause the tape to enter the pneumatic components, causing failures.

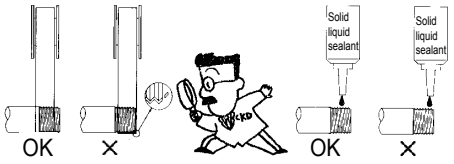

9 Tighten pipes with the appropriate torque.

- Using the appropriate torque can ensure the prevention of leakage and screw damage.
- First tighten the bolts by hand to ensure that the threads are not damaged, then use a tool.

Port thread	Tightening torque N·m
Rc1/4	23 to 25



10 Wind sealing tape or apply a sealant, and screw in without tightening excessively. Apply a wrench to the metal section when tightening.

Fluid Control Components: Warnings and Cautions

Be sure to read this section before use.

Precautions for each model series: product-specific cautions

Electronic pressure switch for coolant (with digital display) CPD Series

⚠ CAUTION Mounting, installation and adjustment

■ Installation

11 Install a damper, absorber or accumulator as necessary if the water hammer, rush pressure or pulsation must be reduced. Pressure exceeding proof pressure even momentarily could damage the CPD.

12 CPD detects every 2.5 msec. Therefore, the switch may activate if the pressure fluctuates even momentarily. Provide sufficient allowance to the setting or use a control circuit or program that ignores momentary changes in switch output.

13 Stop the machinery and equipment and confirm safety before setting switch outputs.

14 Operate keys manually. If sharp instruments, such as knives or screwdrivers, are allowed to contact the plastic film on the operation section, they may damage the film and compromise its protective functions.

15 Avoid connecting the output for a relay contact, operation switch, or other component output in parallel with the PC to the product's output, or short-circuit the input terminal of the PC to which this product is connected with the power supply cable's negative side to test the input device. This product's output circuit could be damaged.

16 Switch data can be set to values that exceed the rating range, or to unrealistic values, but operation and accuracy at such values are not guaranteed. Confirm that settings enable the target operation. Ensure the following difference between data A and B to stabilize operation:

Operation mode	Data difference
Hysteresis operation	0.1 MPa or more
Window operation	0.3 MPa or more

Do not set as follows: { Data A = Data B / ON point = OFF point }

17 Precautions for protection functions

- The product may be prone to damage when in a state of being unpacked or being installed. The protective functions are effective when the product is correctly installed, wired and piped. Provide protection so that water and other substances do not come in contact until installation is completed.
- Wire and pipe the product after fixing it at the installation site. Check surrounding safety and that water and other substances do not come in contact before starting wiring. Continue to provide protection after the product is connected. (The current could leak at the connection section, and water could run along the cable and enter the case.)

⚠ WARNING Use/maintenance

1 Do not apply overcurrent.

- If overcurrent flows to the pressure switch due to a load short-circuit, etc., the pressure switch will be damaged with a risk of ignition. Provide an overcurrent protection circuit, such as a fuse, for the output wire and power cable as needed.

Precautions for each model series: product-specific cautions

Electronic pressure switch for coolant (with digital display) CPD Series

⚠ CAUTION Use/maintenance

1 This product must not be disassembled.

● The product could be damaged or its performance compromised if it is disassembled. CKD does not guarantee performance after disassembly. Remove the entire installation section (pressurized port section) when replacing or moving the product.

2 Stop machinery and equipment, then check the safety before operating the product.

3 CPD detects every 2.5 msec. Whereas, the display is updated 4 times a second. and cannot track fast pressure changes. The switch could therefore start operating at quickly changing pressure even when the display does not indicate the switch setting.

4 The case is made of resin. Do not use solvent, alcohol or detergent in cleaning, or resin could absorb it. There is a risk of affecting the resin. Wipe off dirt with a rag soaked in a diluted neutral detergent solution and wrung out well.

5 Pay attention to reverse currents caused by disconnected wires and wiring resistance.
When other devices, including pressure switches, are connected to the same power supply as the pressure switch, and the output cable and power cable's minus side are short-circuited or the power supply's minus side is disconnected to check operation of the input device from the control panel, reverse current could flow to the pressure switch's output circuit and cause damage.

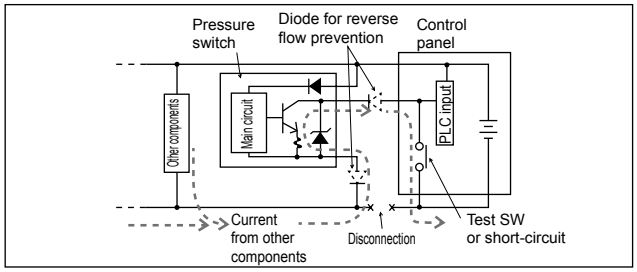

Take the following measures to prevent damage caused by reverse current:

(1) Avoid centralizing current at the power cable, especially a negative power cable, and use a wire as thick as possible.
(2) Limit the number of devices connected to the same power supply as the pressure switch.
(3) Insert a diode in serial with the pressure switch's output cable to prevent reversal of current.
(4) Insert a diode in serial with the pressure switch's power cable minus side to prevent reversal of current.

6 Care must be taken for surge current leading.
When pressure switch power is shared with an inductive load that generates surges, such as a solenoid valve or relay, if the circuit is cut off while the inductive load is functioning, surge current could enter the output circuit and cause damage depending on where the surge absorbing element is installed.

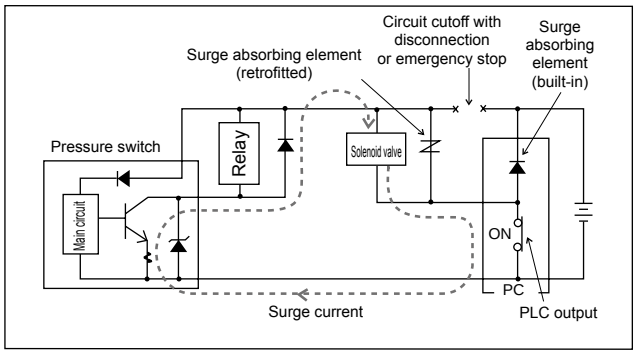

Take the measures below to prevent damage from sneak surge current.

(1) Separate the power supply for the output system comprising the inductive load, such as the solenoid valve and relay, and the input system, such as the pressure switch.
(2) If a separate power supply cannot be used, directly install a surge absorption element for all inductive loads. Consider that the surge absorption element connected to the PLC, etc., protects only the individual device.
(3) Connect a surge absorption element to places on the power wiring shown in the figure below, as a measure against disconnections in unspecified areas.

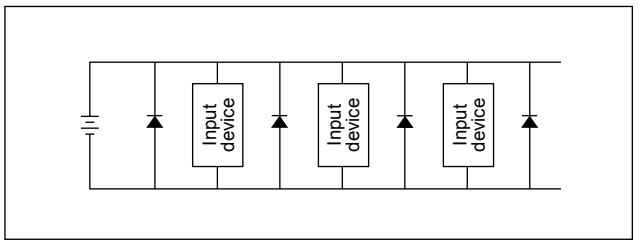

When the devices are connected to a connector, the output circuit could be damaged by the above phenomenon if the connector is disconnected while the power is ON. Turn power OFF before connecting or disconnecting the connector.

7 If the pipe is clogged, remove the hexagon socket screw plug on the back, and clean out the pipe.
After cleaning out the pipe, wind sealing tape or apply sealant, and tighten with an appropriate torque. Apply a wrench to the metal section when tightening.

Thread	Tightening torque N·m
Rc3/8	31 to 33

Multi-monitors

MD

■ **Sensor/controller components**



CONTENTS

● MD 1354
Display description, internal circuit and connection method 1357
⚠ Safety precautions 1358

Compatible with any flow rate and pressure regardless of the sensor

Multi-monitors

Simultaneous confirmation of the display value and the set value is possible.
Output of flow rate and pressure can be displayed regardless of the sensor.

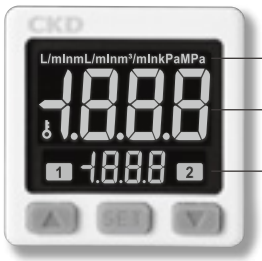

Settable display units
L/min | mL/min | m³/min | kPa | MPa

Main display: Display value

Sub-display: Set value

Set display value freely within range

Scaling function

Enables conversion display of sensor input to arbitrary values.
The decimal point position can also be switched.

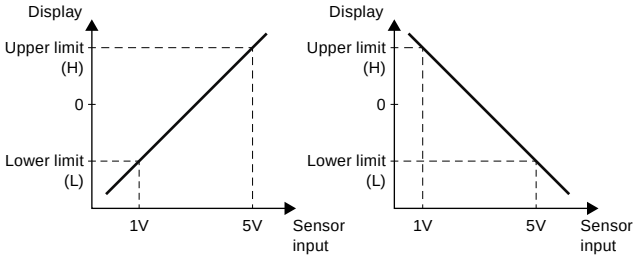

Analog output proportional to the displayed value available

Switch output 2 points + analog output 1 point equipped

Transmits analog output signal proportional to input signal of the sensor to PLC, etc.

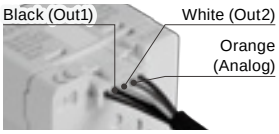

Easy-to-read display

3-color display

The display value and set value are displayed in three colors.

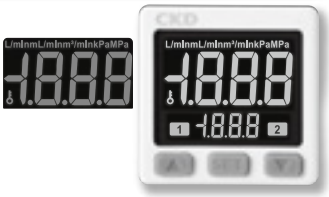

Prevents misoperation

Lock function

Prevents misoperation such as touching the wrong key.

Saves power with display OFF when not setting

Energy saving mode function

In energy saving mode, the display will turn OFF after 30 seconds unless a button is pressed.

* Environment inspection is only available for "RoHS certificate" and "REACH certificate". Parts level detailed data is not supported.



Multi-monitors

MD Series

Specifications

1 MPa ≈ 145.0 psi, 1 MPa = 10 bar

Display	Flow rate/ Pressure range (*)	Upper limit (H) / Lower limit (L)	-100.0 to 0	1.000 to 0	1.50 to 0	2.00 to 0	4.00 to 0	5.00 to 0	10.00 to 0	12.0 to 0	20.0 to 0	25.0 to 0
		Resolution	0.1	0.001	0.01	0.01	0.01	0.01	0.01	0.1	0.1	0.1
		Upper limit (H) / Lower limit (L)	32.0 to 0	50.0 to 0	60.0 to 0	100.0 to 0	200 to 0	300 to 0	500 to 0	1000 to 0	1.000 to -1.000	2.00 to -2.00
		Resolution	0.1	0.1	0.1	0.1	1	1	1	1	0.001	0.01
		Upper limit (H) / Lower limit (L)	5.00 to -5.00	10.00 to -10.00	20.0 to -20.0	50.0 to -50.0	100.0 to -100.0	200 to -200	500 to -500	1000 to -1000	300 to -100	980 to -100
		Resolution	0.01	0.01	0.1	0.1	0.1	1	1	1	1	1
		With scaling function										
	Unit (*)	MPa, kPa, mL/min, L/min, m^3/min										
Power supply voltage		12 to 24 VDC ±10% ripple (P-P) 10% or less										
Current consumption		40 mA or less (no load)										
Sensor input		1 to 5 V										
Sensor supply power current		Max. 100 mA										
Switch output		NPN: transistor, open collector 2 points Max. load current: 125 mA Max. power supply voltage: 30 VDC Internal voltage drop: 1.5 V or less					PNP: transistor, open collector 2 points Max. load current: 125 mA Max. power supply voltage: 24 VDC Internal voltage drop: 1.5 V or less					
Repeatability (switch output)		±0.1% F.S. ±1 digit or less										
Hysteresis	One-point mode / Hysteresis mode / Window comparator mode	Adjustment possible (*)										
Response time		2.5 ms or less (Chattering prevention: 25 ms, 100 ms, 250 ms, 500 ms, 1000 ms, and 1500 ms selectable)										
Switch output load short-circuit protection		Yes										
Display		Main/unit display: 2 colors (red, green) Sub-display: Orange (sampling rate: 5 times/sec)										
Display accuracy		±1% F.S. ±1 digit or less (reference temperature: 25 ±3°C)										
Display lamp		Orange (OUT1, OUT2)										
Analog output (voltage output)		Output voltage: 1 to 5 V ±2% F.S. or less (rated pressure range) Linearity: ±1% F.S. Output impedance: 1 kΩ										
Analog output (current output)		Output current: 4 to 20 mA ±2% F.S. or less (rated pressure range) Linearity: ±1% F.S. Max. load impedance: 250 Ω (12 V), 600 Ω (24 V) Min. load impedance: 50 Ω										
Environment conditions	Degree of protection	IP40										
	Ambient temperature	Usage: 0 (32°F) to 50°C (122°F), Storage: -10 (14°F) to 60°C (140°F) (no condensation or freezing)										
	Ambient humidity	Usage/Storage: 35 to 85% RH (no condensation)										
	Withstand voltage	1000 VAC, 1 minute (between the case and lead wire)										
	Insulation resistance	50 MΩ or less (500 VDC, between the case and lead wire)										
	Vibration resistance	Compound amplitude 1.5 mm, 10 Hz - 55 Hz - 10 Hz per minute, 2 hours each in X, Y, Z directions										
	Impact resistance	100 m/s^2 (10 G), 3 times each in X, Y, Z directions										
Temperature characteristics		±0.5 F.S. or less (25°C (77°F) reference) temperature range 0 (32°F) to 50°C (122°F)										
Lead wire		Oil resistant cable (0.15 mm^2)										
Weight		Approx. 67 g (Lead wire 2 m)										

*The flow rate and pressure range can be selected from 30 patterns. Arbitrary figures can also be set with the scaling function.
*The one-point set mode and window comparator mode hysteresis can be adjusted between 1 and 8 digits.
*The unit can be selected from MPa, kPa, mL/min, L/min, and m^3/min.

Scaling function

Arbitrary figures can also be set for the flow rate/pressure range with the scaling function.
The number of figures after the decimal point can also be changed.
(Note) The upper (H) and lower (L) limits can be set within a range of ±1999. However, the upper (H) and lower (L) limits cannot be set with the same polarity (both positive or both negative).

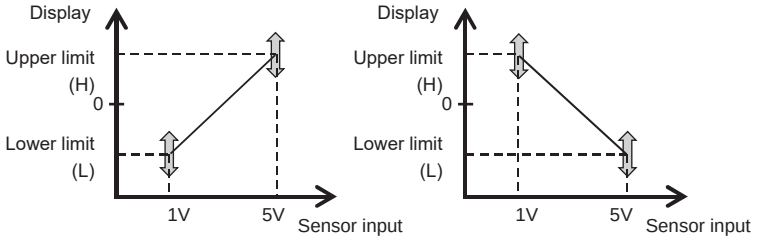

How to order

Multi-monitor model No.

MD - N V A

Ⓐ Output
Ⓑ Analog output format
Ⓒ Compatible sensor

Code	Description
Ⓐ Output	
N	Switch output (NPN) 2 points
P	Switch output (PNP) 2 points
Ⓑ Analog output format	
V	Voltage output (1 to 5 V)
A	Current output (4 to 20 mA)
Ⓒ Compatible sensor	
A	FSM-V, PPE, PPD3-A
B	WFK3000
C	WFC

(Note) The corresponding sensor is voltage output (1 to 5 V).

(Standard attachment)
· 5-conductor cable 2 m: 1
· Sensor connection connector (e-CON): 1

Ⓒ	AWG	O.D.	Cover color	Sumitomo 3M model No.
A	24-26	ø1.0 to 1.2	Yellow	37104-3122-000 FL
B	24-26	ø1.2 to 1.6	Orange	37104-3163-000 FL
C	20-22	ø1.6 to 2.0	Gray	37104-2206-000 FL

Discrete option model No.

MD - KD

Ⓐ Option

Code	Description
Ⓐ Option	
KD	Parallel mounting bracket (mounting screws included)
KL	L-shaped mounting bracket (mounting screws included)
KHS	Panel adapter
KHSCB	Panel adapter + Front protective cover
C2	5-conductor connector cable 2 m

Dimensions

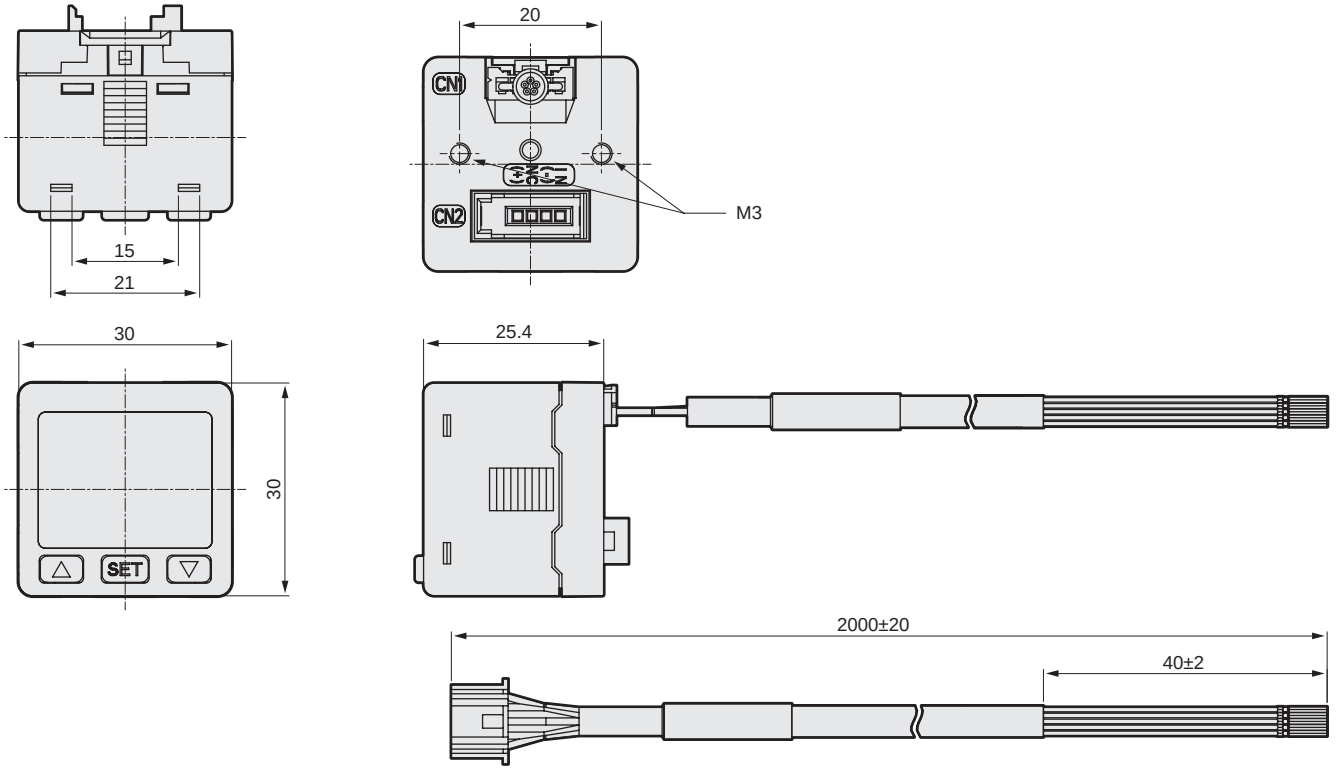

Optional dimensions

●Bracket mounting

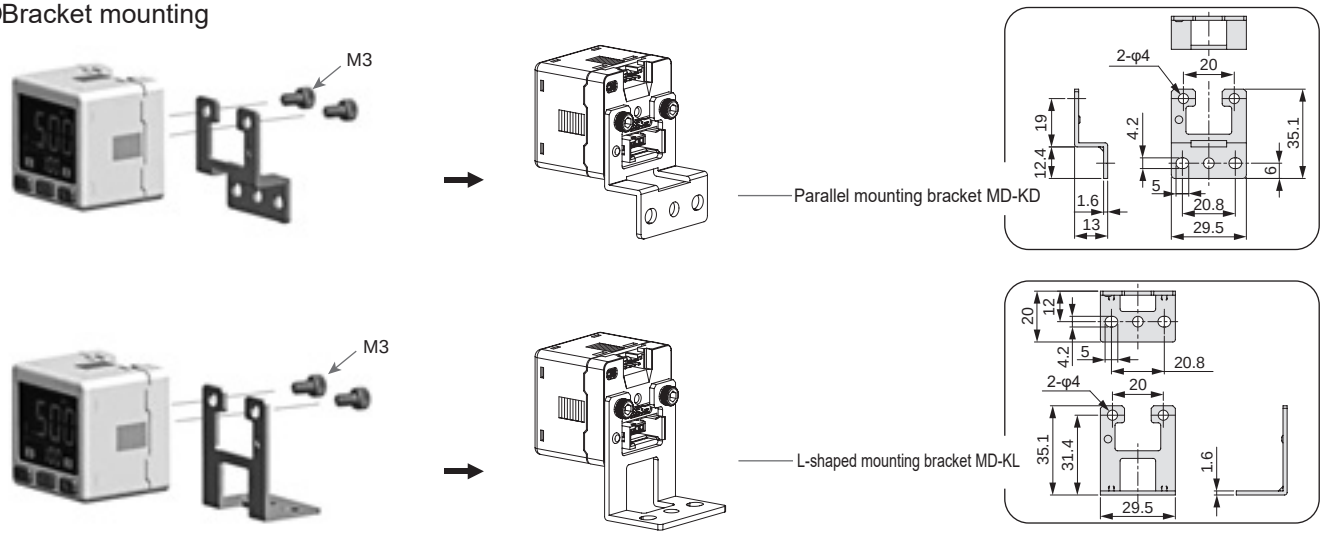

●Panel mount

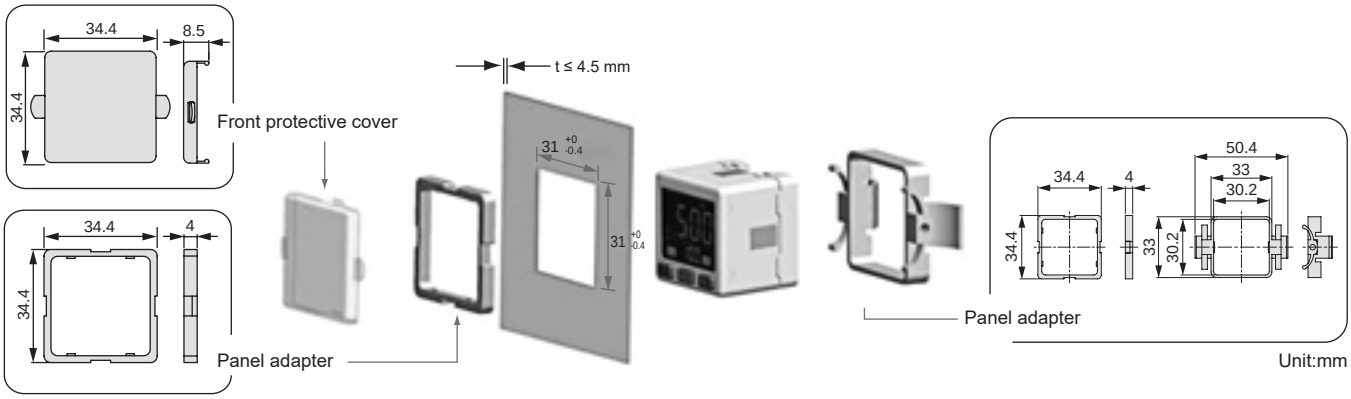

Unit:mm

Display description



Internal circuit / connection method

MD-NV
2NPN + Analog output (1 to 5 V)

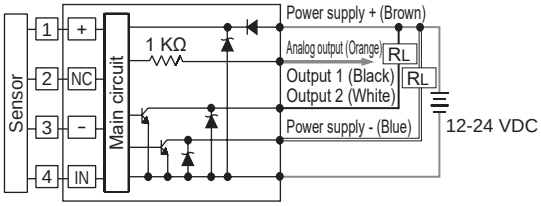

MD-PV
2PNP + Analog output (1 to 5 V)

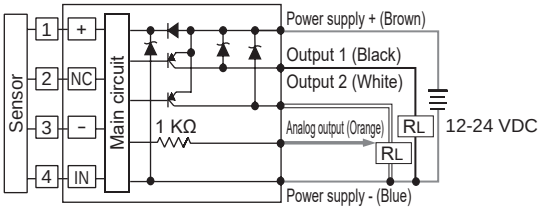

MD-NA
2NPN + Analog output (4 to 20 mA)

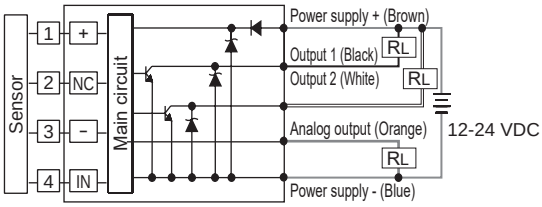

MD-PA
2PNP + Analog output (4 to 20 mA)

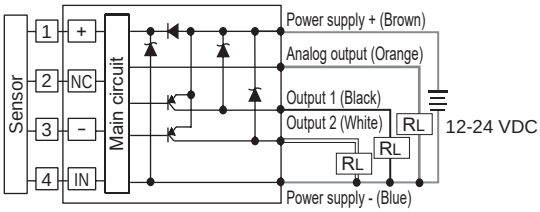

PIN No.	Sensor wiring
1	Power supply +
2	N.C.
3	Power supply -
4	Sensor input (1 to 5 V)

PIN No.	Cable color
1	Brown (Power supply +)
2	Orange (Analog output)
3	White (OUT2)
4	Black (OUT1)
5	Blue (Power supply -)

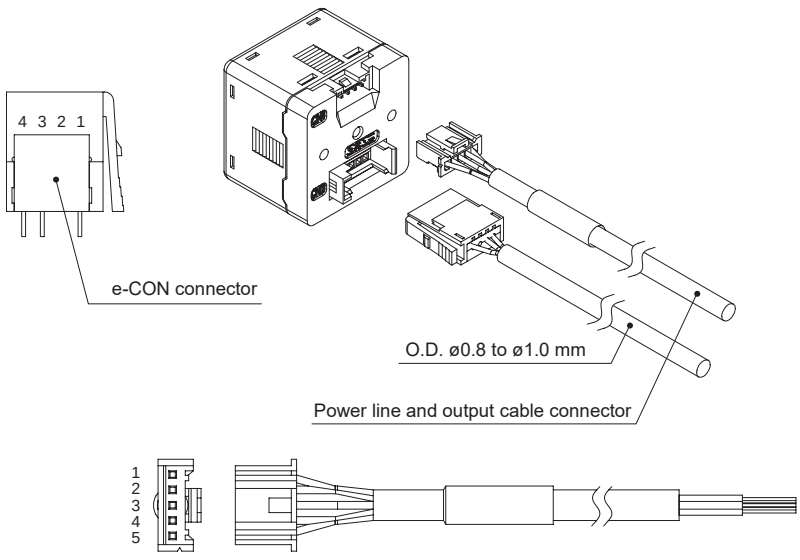

Safety precautions

■ Design/selection

WARNING

● Use this product in accordance with specifications.

- Use for applications outside the specifications, or at load currents, voltages, temperatures, impacts or environments likewise could result in damage or malfunction.

● Power supply voltage

- Do not use this product at levels exceeding the power supply voltage. The product could rupture or burn if voltage exceeding the working range is applied or if an AC power supply (100 VAC) is applied.

● Load short-circuit

- Do not short-circuit the load. Failure to observe this could result in rupture or burning.

CAUTION

● Working environment

- Avoid using this product where vibration or impact exceeding 100 m/S^2 could be applied.
- Do not use this product in areas containing water droplets, oil droplets, or dust.

● Determine the set value taking error caused by accuracy and temperature characteristics into consideration.

● Take care when using this product for an interlock circuit.

- When using this product for an interlock signal requiring high reliability, provide a double interlock by installing a mechanical protection function or a switch (sensor) other than this product as a safeguard against failure.

● Corresponding sensors

- The corresponding sensor is the voltage output (1 to 5 V) type. If the current output type or other voltage output type is connected, it will not operate properly.
- The maximum supply current to the sensor is 100 mA. Check the specifications of the connected sensor before use.
- As the compatible e-CON type varies depending on the sensor, select upon confirmation with How to order on page 2.
- The FSM2 separated display sensor cannot be used as is, because the e-CON wiring pin array is different.

● Working conditions for CE compliance

The standard for the immunity for industrial environments used for CE conforming products is EN61000-6-2, but the following requirements must be satisfied in order to conform to this standard. Conditions

- The evaluation of this product is performed by using a cable with a paired power supply line and signal line to assess the performance.
- This product is not equipped with surge protection. Implement surge protection measures on the equipment side.

■ Mounting, installation and adjustment

WARNING

● Connecting

- Be sure to turn power OFF before wiring and connecting this product.
- Avoid miswiring. It may cause damage, failure or misoperation.
  - Use a stabilized low-noise power supply with a ripple rate of 10% or less.
- Install this product and wiring as far away as possible from sources of noise such as power distribution wires. Take separate measures against surge generated from inductive loads that enters the power wire.
- Do not start the control unit, machinery or equipment immediately after wiring. Unpredictable signals could be output due to incorrectly set values. Conduct an energized test with the control unit, machinery and equipment stopped, and set required switches.

CAUTION

● Range setting

- When using the product, be sure to set the range and units before operation.

● Care must be taken to protect the body and lead wire.

- Check that stress is not directly applied to cable leadouts or connectors.
- Connect and wire bending-resistant material, such as robot wire material, for the movable parts.
- For e-CON connector wiring connection, cut the tip of the sensor lead wire for use. Insert the wire through to the back of the connector, and securely crimp with pliers, etc. The wire sheath does not need to be removed.
- As the analog voltage output lead wire sheath color varies depending on the sensor, check the sensor specifications before e-CON wiring.
  Check that the pin No. and sensor wiring are correct before crimping.
  Incorrect wiring can result in malfunction, failure, or damage to the sensor or to this product.

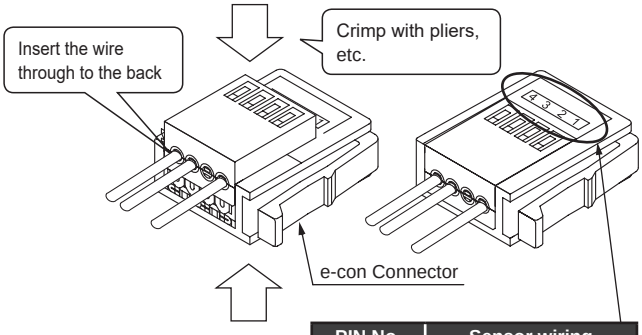

PIN No.	Sensor wiring
1	Power supply +
2	N.C.
3	Power supply -
4	Sensor input (1 to 5 V)

■ Use/maintenance

CAUTION

- For safety, turn the power OFF before connecting the sensor.
- Regarding the sensor to be connected, follow the precautions in the sensor's instruction manual.

Sensor/controller components

		Page
For gases	Small size flow rate sensor (RAPIFLOW) FSM3, FSM	1367
	Compact controller (RAPIFLOW) FCM	1491
	Pneumatic flow rate sensor (FLUEREX) display separated PFD/PFK	1529
For water	Karman vortex flow rate sensor for water WFK2 Series	1553
	Capacitance electromagnetic flow sensor WFC	1571
	Karman vortex (FLUEREX) flow sensor WFK	1587
	Monitor	1353

Flow sensor for air/controller

CONTENTS

Series variation		1362
Compact flow rate sensor (RAPIFLOW)		
	FSM3	1367
Miniature	FSM-X	1454
Miniature	FSM-V	1460
Compact flow rate controller (RAPIFLOW) FCM		1491
Pneumatic flow rate sensor (FLUEREX) display separated PFD		1529

Series variation

Compact flow rate sensor

* Refer to page 1364 for PF Series.

[(For air/nitrogen gas/argon/carbon dioxide/mixed gases (argon + carbon dioxide) RAPIFLOW FSM3 Series]

RAPIFLOW FSM3/model series variation				Body material	
Bar display	LCD display		IO-Link		
Analog output 1 point Capable of mounting display (optional) FSM3-B□ Series	Analog output 1 point NPN output 1 point/2 points FSM3-L□ Series	Analog output 1 point PNP output 1 point/2 points FSM3-L□ Series	IO-Link communication	Resin body	Stainless steel body
					
FSM3-B005	FSM3-L005-A/B/E/F	FSM3-L005-C/D/G/H	FSM3-C005-L	●	●
FSM3-B010	FSM3-L010	FSM3-L010	FSM3-C010-L	●	●
FSM3-B020	FSM3-L020	FSM3-L020	FSM3-C020-L	●	●
FSM3-B050	FSM3-L050	FSM3-L050	FSM3-C050-L	●	●
FSM3-B100	FSM3-L100	FSM3-L100	FSM3-C100-L	●	●
FSM3-B200	FSM3-L200	FSM3-L200	FSM3-C200-L	●	●
FSM3-B500	FSM3-L500	FSM3-L500	FSM3-C500-L	●	●
FSM3-B101	FSM3-L101	FSM3-L101	FSM3-C101-L	●	●
FSM3-B201	FSM3-L201	FSM3-L201	FSM3-C201-L	●	●
FSM3-B501	FSM3-L501	FSM3-L501	FSM3-C501-L	●	●
FSM3-B102	FSM3-L102	FSM3-L102	FSM3-C102-L	●	●

Note: Refer to “How to order” for details on body material and port size combinations.
* The flow rate range 10 to 100 ℓ/min. is only for air and nitrogen gas.

[(Air/nitrogen gas) Miniature flow rate switch RAPIFLOW FSM-X Series]

RAPIFLOW FSM-X/model No. series variation		Body material	
Analog output 1 point Discrete sensor head	Analog output 1 point Flow path block	Resin body	Stainless steel body
			
FSM-X-AF005	FSM-X-AF005-□	●	
FSM-X-AF010	FSM-X-AF010-□	●	
FSM-X-AF050	FSM-X-AF050-□	●	
FSM-X-AF100	FSM-X-AF100-□	●	
FSM-X-AR005	FSM-X-AR005-□	●	
FSM-X-AR010	FSM-X-AR010-□	●	
FSM-X-AR050	FSM-X-AR050-□	●	
FSM-X-AR100	FSM-X-AR100-□	●	

Note: Refer to “How to order” for details on body material and port size combinations.

RAPIFLOW FSM-V/model No. series variation			Body material	
Analog output	Switch output			
Analog output 1 point Capable of mounting display (sold separately) FSM-V-A□3-□ Series	NPN output 2 points FSM-V-N□3-□ Series	PNP output 2 points FSM-V-P□3-□ Series	Resin body	Stainless steel body
				
FSM-V-A□3-R0005	FSM-V-N□3-R0005	FSM-V-P□3-R0005	●	
FSM-V-A□3-R0010	FSM-V-N□3-R0010	FSM-V-P□3-R0010	●	
FSM-V-A□3-R0050	FSM-V-N□3-R0050	FSM-V-P□3-R0050	●	
FSM-V-A□3-R0100	FSM-V-N□3-R0100	FSM-V-P□3-R0100	●	
FSM-V-A□3-R0500	FSM-V-N□3-R0500	FSM-V-P□3-R0500	●	
FSM-V-A□3-R1000	FSM-V-N□3-R1000	FSM-V-P□3-R1000	●	

Port size									Flow rate range L/min	Working pressure MPa (gauge pressure)	Page
ø4 (BH)	ø6 (CH)	ø8 (DH)	ø10 (EH)	ø1/4 (HH)	ø3/8 (JH)	Rc1/8 (AA)	Rc1/4 (BA)	Rc1/2 (CA)	-1000 100 10 1 0 1 10 100 1000	-0.1 n 1.0	
●	●			●		●			−0.5 0.5	Vacuum area	1367
●	●			●		●			-1 1		
●	●			●		●			-2 2		
●	●			●		●			-5 5		
●	●			●		●			-10 10		
●	●			●		●			-20 20		
	●	●		●		●	●		-50 50	SUS body	
		●	●		●		●		-100 100		
		●	●		●		●		-200 200		
								●	-500 500 1000	-0.09 Resin body 0.75	
								●	-1000		

Port size				Flow rate range L/min	Working pressure MPa (gauge pressure)	Page
(Single sensor head) without fitting		ø4	M5	Detects 2-direction flow −100 −10 −1 −0.1 −0.01 0 0.01 0.1 1 10 100	−0.1 n 1.0	
	●	●	●	0 0.5	Vacuum area	1454
	●	●	●	0 1		
	●	●	●	0 5		
	●	●	●	0 10		
	●	●	●	−0.5 0.5		
	●	●	●	−1 1		
	●	●	●	−5 5		
	●	●	●	−10 10		

Port size						Flow rate range L/min	Working pressure MPa (gauge pressure)	Page
ø1.8	ø4	ø4 (L shaped)	M5	Rc1/8 (6A)	Rc1/4 (8A)	Detects 2-direction flow −100 −10 −1 −0.1 −0.01 0 0.01 0.1 1 10 100	−0.1 n 1.0	
●	●	●	●			−0.05 0.05	Vacuum area	1460
●	●	●	●			−0.1 0.1		
●	●	●	●			−0.5 0.5		
●	●	●	●			−1 1		
●	●	●	●			−5 5		
●	●	●	●			−10 10		

[FLUEREX pneumatic flow sensor PF Series]

FLUEREX flow sensor PF/model No. series variation		
Display separated		
PFD 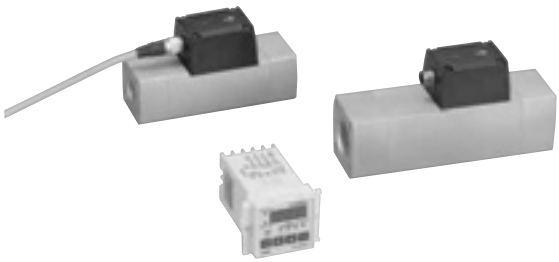	Transportation measuring tester kit 	
PFD-501	PFK-501	
PFD-102	PFK-102	
PFD-202	PFK-202	
PFD-402	PFK-402	
PFD-802	PFK-802	
PFD-163		

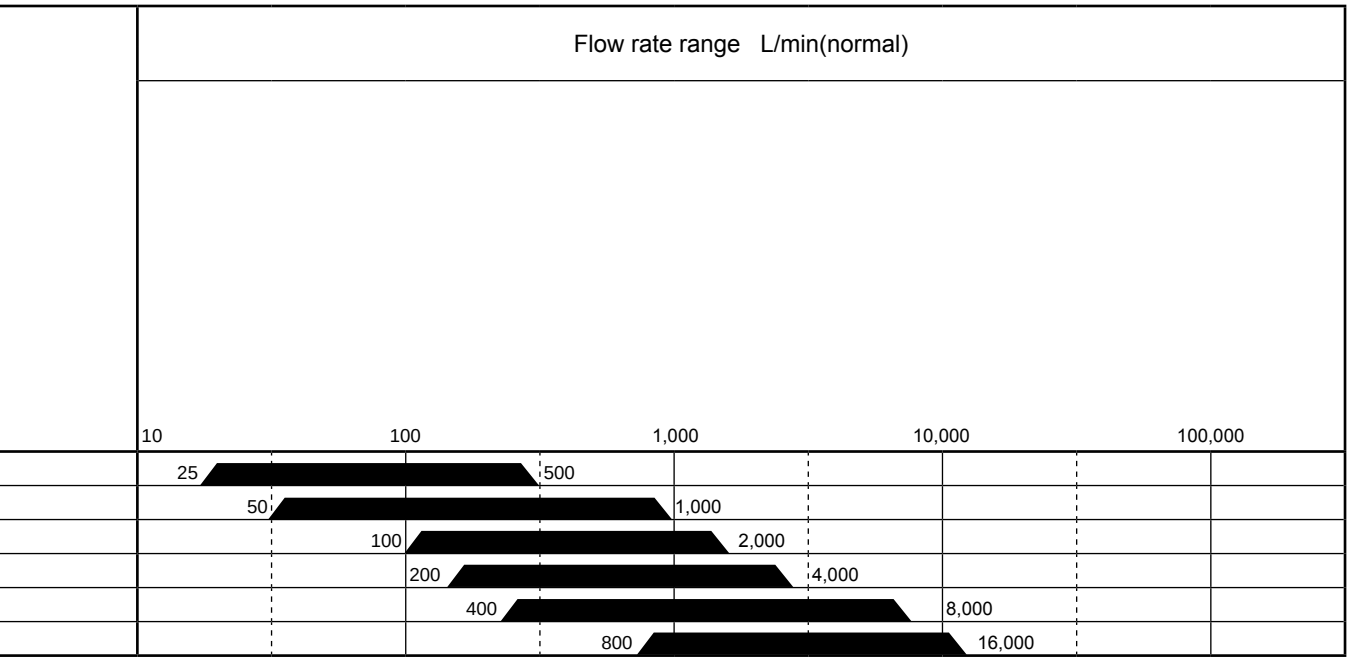

	Model No.	Port size						Page
		10A	15A	20A	25A	40A	50A	
Display separated	PFD-501	●						1534
	PFD-102		●					
	PFD-202			●				
	PFD-402				●			
	PFD-802					●		
	PFD-163						●	
Tester kit	PFK-501		●					1540
	PFK-102		●					
	PFK-202				●			
	PFK-402				●			
	PFK-802					●		

Compact flow rate sensor

FSM3 (RAPIFLOW)

■ Sensor controller/flow rate sensor



CONTENTS

Product introduction	1368
Solution examples	1370
Series variation	1372
● Resin body	
LCD display	1374
Bar display	1382
IO-Link	1388
● Stainless steel body	
LCD display	1396
Bar display	1404
IO-Link	1410
Internal structure	1416
● Separated display	1418
Technical data	1420
Operation mode	1434
Options	1440
⚠ Safety precautions	1443

Diversified

Five types of gases can be measured with just one unit

Gas type switching function (LCD display, IO-Link) (full scale flow rate 200 L/min or less model)

Air, nitrogen, argon, carbon dioxide and gas mixture (Ar:CO_2 (8:2) are supported with this single flow rate sensor.

Gases can be switched with operation buttons.

With the IO-Link specifications, gases can be switched remotely using the host controller.

* If you have a request for a mixing ratio, please contact our sales representative.

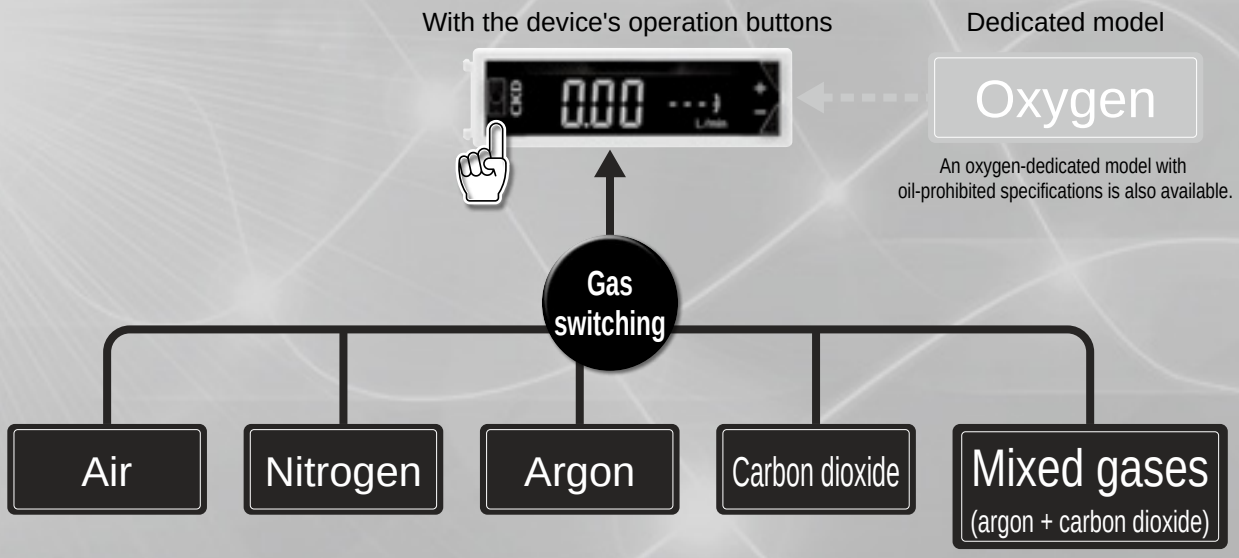

High performance

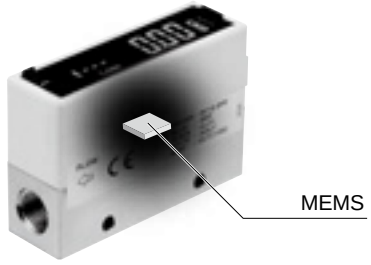

MEMS stands for Micro Electro Mechanical Systems or the technology of microscopic devices to which microprocessing technology, used in the manufacture of semiconductors, is applied.

Clean-room specifications

Anti-dust generation packaging (P70) and oil-prohibited specifications (P80) are included in the product lineup as standard

Usage according to the grade of the device is possible.

Outgassing supported

Because the stainless steel body does not use resin in its flow path, it is ideal for processes where outgassing is a problem.

High precision/high-speed response

Repeatability: Within ±1% F.S.

Display accuracy: Within ±3% F.S.

Response time: 50 msec

Reduction of pressure loss

Up to 50% reduction with flow path redesign

Bi-directional fluid measurement

Contributes to reducing tact time.

The flow direction can be measured as desired.

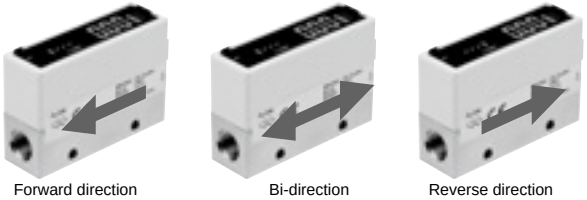

Introducing the IO-Link model

IO-Link is a digital communication standard for sensors/actuators at factory sites. (IEC 61131-9)
Unlike analog communication, it enables the transmission of parameters and event data.

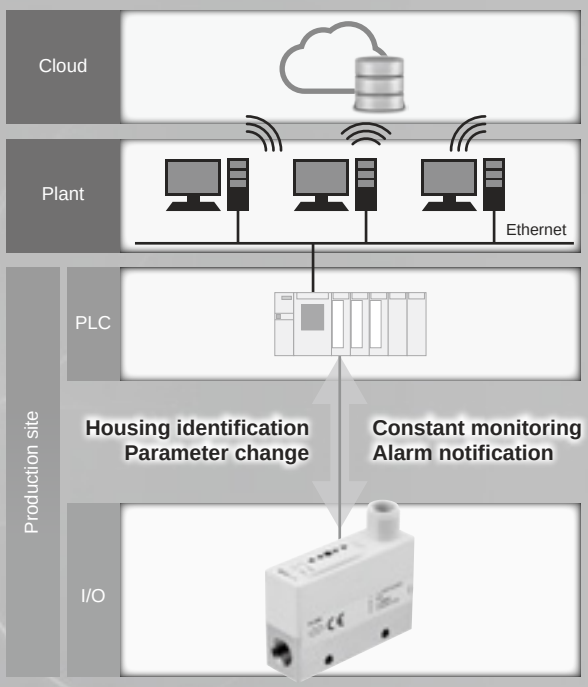

Features of IO-Link

- Digital signal — Constant monitoring via digital data is possible.
- Parameter remote control — Parameters can be set and changed via the network, enabling remote operation of the device.
- Housing identification — Model Nos. and serial Nos. can be checked via the network.
- Plug & Play — Settings can be copied from the master (scanner) side, making troublesome parameter resetting during maintenance unnecessary.
- Error notification — Device failure and disconnection can be confirmed.
- Connection to fieldbus — The network can also be changed to Ethernet connection, making the device a part of IoT.

User-friendly

User-friendly

Rotatable LCD display

Display can be vertically inverted



Variety of fitting variations

Resin body

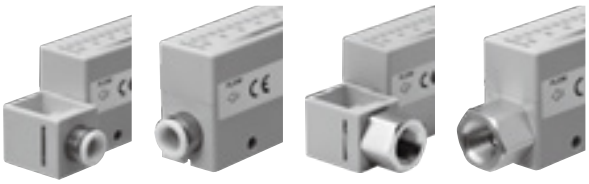

Push-in Elbow | Push-in Straight | Screw-in Elbow | Screw-in Straight

Easy mounting (option)

DIN rail mount



Panel mount



Stainless steel body

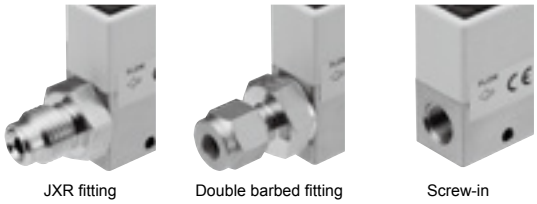

JXR fitting | Double barbed fitting | Screw-in

Leakage inspection

Fill the drinking water container with gas to detect the presence or absence of leakage.

Filter unit



Digital pressure sensor



2-port solenoid valve



Compact flow rate sensor

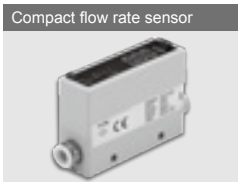

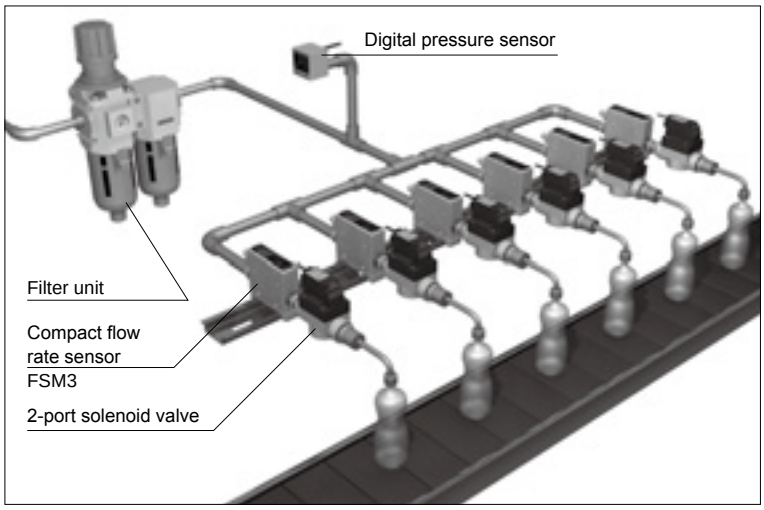

Air consumption management

Monitor the air consumption of facilities that use air components.

Filter unit

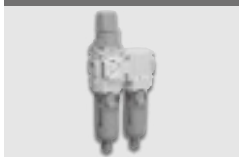

Digital pressure sensor



Compact flow rate sensor

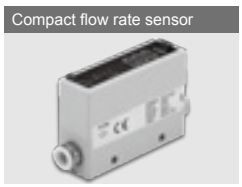

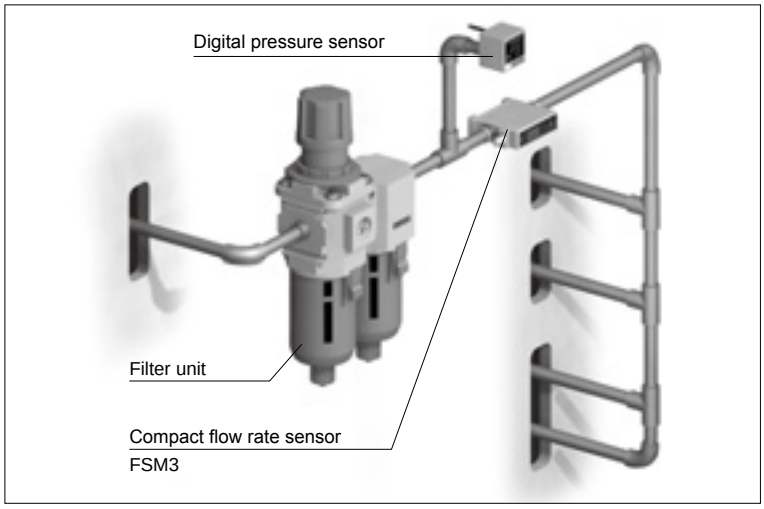

Painting air flow rate control

Change the air pressure and controls flow rate used during coating with the electro pneumatic regulator.

Filter unit

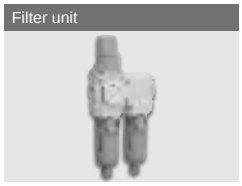

Electro-pneumatic regulator



Compact flow rate sensor

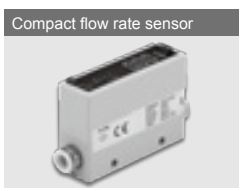

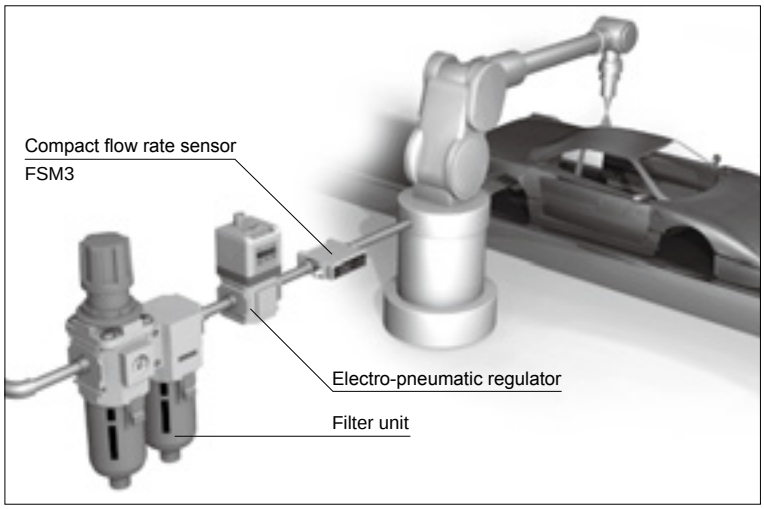

Biochemical culture apparatus

CO_2 flow rate is measured to promote the photosynthesis of organisms.

Inline clean filter



Digital pressure sensor



Compact flow rate sensor

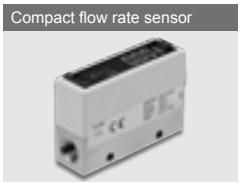

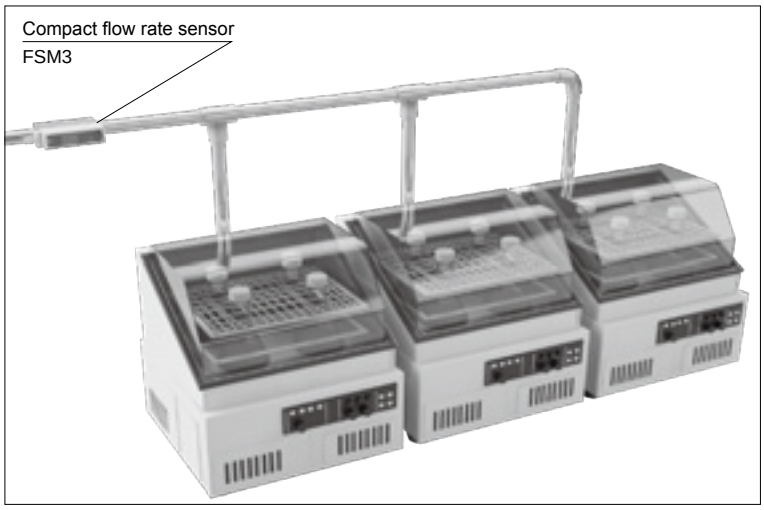

Arc welding

Manages argon, gas mixtures (argon + carbon dioxide), and other shielding gases.

Rotary clamp cylinder



Guided cylinder



Cylinder switch with connector



Compact flow rate sensor (IO-Link model)



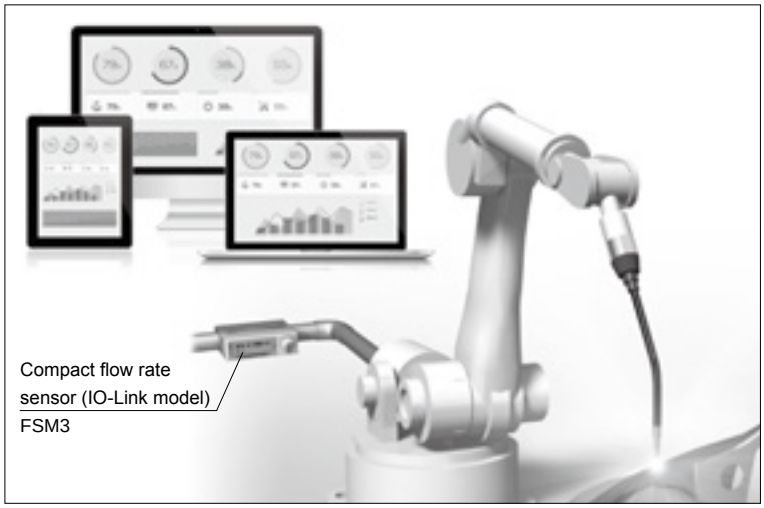

Electronic part installation

Controls the tension of gold wire for installing electronic parts.

Inline clean filter



Digital pressure sensor



Compact flow rate sensor

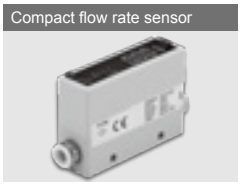

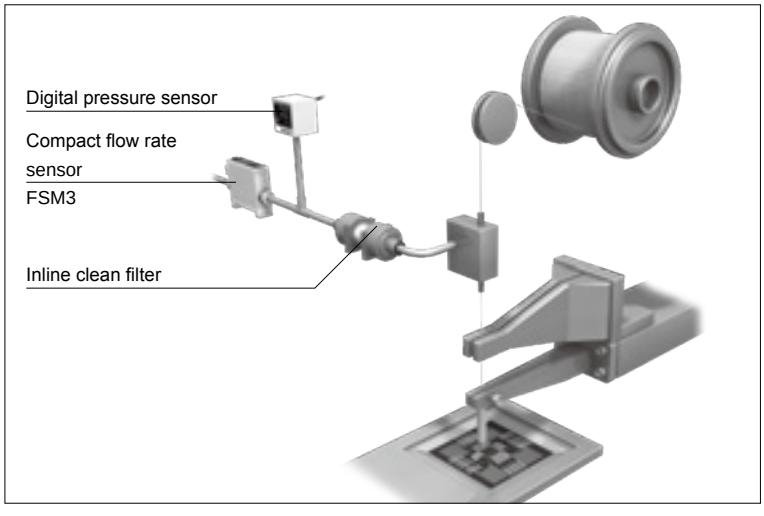

Series variation

Compact flow rate sensor (RAPIFLOW) FSM3 Series

	Appearance	Applicable fluids	Flow rate adjustment valve *1	EXA connecting fitting *2
Resin body	LCD display / Bar display / IO-Link 	Air Nitrogen Carbon dioxide Argon Mixed gases (argon + carbon dioxide)	●	
			●	
			●	
			●	
			●	
			●	
			●	
			●	●
			●	
			●	
			●	
			●	
Stainless steel body	LCD display / Bar display / IO-Link 	(1) Air Nitrogen Carbon dioxide Argon Mixed gases (argon + carbon dioxide)	●	
			●	
			●	
			●	
			●	
			●	
		(2) Oxygen		
			●	
			●	

*1: Supports LCD display
*2: Compatible with LCD display and bar display

Clean-room specifications		Port size	Max. flow rate (L/min)											Description Page
P70	P80		0.5	1	2	5	10	20	50	100	200	500	1000	
●	●	ø4	●	●	●	●	●	●						· LCD display Page 1374 · Bar display* Page 1382 · IO-Link Page 1388
●	●	ø6	●	●	●	●	●	●	●					
●		ø8							●	●	●			
●		ø10								●	●			
●		ø1/4"	●	●	●	●	●	●	●					
●		ø3/8"								●	●			
●	●	Rc1/8	●	●	●	●	●	●	●					
●	●	Rc1/4							●	●	●			
●	●	Rc1/2										●*	●*	
●	●	NPT1/8	●	●	●	●	●	●	●					
●	●	NPT1/4							●	●	●			
●	●	NPT1/2										●*	●*	
●	●	G1/8	●	●	●	●	●	●	●	●				
●	●	G1/4							●	●	●			
●	●	G1/2										●*	●*	
●	●	Rc1/8	●	●	●	●	●	●	●					· LCD display Page 1396 · Bar display* Page 1404 · IO-Link Page 1410
●	●	Rc1/4							●	●	●			
●	●	Rc1/2										●*	●*	
●	●	G1/8	●	●	●	●	●	●	●					
●	●	G1/4							●	●	●			
●	●	G1/2										●*	●*	
●	●	NPT1/8	●	●	●	●	●	●	●					
●	●	NPT1/4							●	●	●			
●	●	NPT1/2										●*	●*	
●	●	1/4" double barbed fitting	●	●	●	●	●	●	●	●	●			
●	●	1/4" JXR male fitting	●	●	●	●	●	●	●	●	●			

* Applicable fluids are air and nitrogen only.

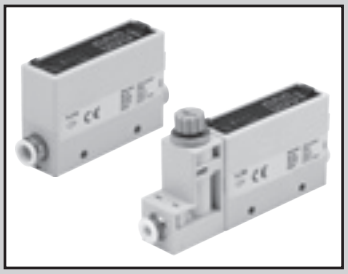

Compact flow rate sensor RAPIFLOW

FSM3 Series

LCD display

● Resin body (flow rate range: 500 mL/min to 1000 L/min)

CE RoHS

LCD display specifications

1 MPa ≈ 145.0 psi, 1 MPa = 10 bar

Item			FSM3-[A][B][C][D][E][F][G][H][I]-[ ]										
			[B]										
			005	010	020	050	100	200	500	101	201	501	102
Flow direction	[C]	U	Uni-direction										
		B	Bi-direction										
Measured flow rate range (□/min) *1	[B]	U	15 to 500 mL	30 to 1000 mL	0.06 to 2.00 L	0.15 to 5.00 L	0.30 to 10.00 L	0.6 to 20.0 L	1.5 to 50.0 L	3.0 to 100.0 L	6 to 200 L	15 to 500 L	30 to 1000 L
		B	-500 to -15, 15 to 500 mL	-1000 to -30, 30 to 1000 mL	-2.00 to -0.06, 0.06 to 2.00 L	-5.00 to -0.15, 0.15 to 5.00 L	-10.00 to -0.30, 0.30 to 10.00 L	-20.0 to -0.6, 0.6 to 20.0 L	-50.0 to -1.5, 1.5 to 50.0 L	-100.0 to -3.0, 3.0 to 100.0 L	-200 to -6, 6 to 200 L	-500 to -15, 15 to 500 L	-1000 to -30, 30 to 1000 L
Display			4 digit + 4 digit 2 color LCD										
Flow rate display range (□/min) *2	[B]	U	-49 to 549 mL	-99 to 1099 mL	-0.19 to 2.19 L	-0.49 to 5.49 L	-0.99 to 10.99 L	-1.9 to 21.9 L	-4.9 to 54.9 L	-9.9 to 109.9 L	-19 to 219 L	-49 to 549 L	-99 to 1099 L
		B	-549 to 549 mL	-1099 to 1099 mL	-2.19 to 2.19 L	-5.49 to 5.49 L	-10.99 to 10.99 L	-21.9 to 21.9 L	-54.9 to 54.9 L	-109.9 to 109.9 L	-219 to 219 L	-549 to 549 L	-1099 to 1099 L
Integration display *3		Display range	0 to ±9,999,999 mL		0.00 to ±99,999.99 L			0.0 to ±999,999.9 L			0 to ±9,999,999 L		
		Pulse output rate	5 mL	10 mL	0.02 L	0.05 L	0.1 L	0.2 L	0.5 L	1 L	2 L	5 L	10 L
Working conditions		Applicable fluids *4	Clean air (JIS B 8392-1:2012 1.1.1 to 5.6.2), compressed air (JIS B 8392-1:2012 1.1.1 to 1.6.2), nitrogen gas										
			Argon, carbon dioxide, and gas mixture (argon + carbon dioxide)										–
		Temperature range	0 (32°F) to 50°C (122°F) (no condensation)										
		Pressure range	-0.09 (≈-13 psi, 0 bar) to 0.75 MPa (≈108 psi, 7 bar)										
		Proof pressure	1 MPa (≈145 psi, 10 bar)										
Operating ambient temperature/humidity			0 (32°F) to 50°C (122°F), 90% RH or less										
Storage temperature			-10 (14°F) to 60°C (140°F)										
Accuracy *5 (Fluid: in dry air)		Accuracy *6	Within ±3% F.S. (Secondary side released to atmosphere) (The scope of warranty is in accordance with the "measurement flow rate range.")										
		Repeatability *7	Within ±1% F.S. (Secondary side released to atmosphere)										
		Temperature characteristics	Within ±0.2% F.S./°C (15 (59°F) to 35°C (95°F), base temperature 25°C (77°F))										
		Pressure characteristics	Within ±5%F.S. (secondary side released to atmosphere reference)								Within ±5% F.S (0.35 MPa (≈50 psi, 3 bar) reference)		
Response time		*8	50 msec or less (setting response time OFF)										
Switch output	[G]	A, B, E, F	NPN open collector output (50 mA or less, voltage drop 2.4 V or less)										
		C, D, G, H	PNP open collector output (50 mA or less, voltage drop 2.4 V or less)										
Analog output *9		A, B, C, D	1 to 5 V voltage output (connecting load impedance 50 kΩ or more)										
		E, F, G, H	4 to 20 mA current output (connecting load impedance 0 to 300 Ω)										
Power supply voltage *10		A, B, C, D	12 to 24 VDC (10.8 to 26.4 V) ripple rate 1% or less										
		E, F, G, H	24 VDC (21.6 to 26.4 V) ripple rate 1% or less										
Current consumption		*11	45 mA or less										
Lead wire			ø3.7, AWG26 or equivalent x 5-conductor (connector), insulator O.D. 1.0										
Functions		*12	(1) Gas type selection, (2) setting copy function, (3) flow rate integration, (4) peak hold, etc.										
Degree of protection			IP40 or equivalent (IEC standard)										
Protection circuit		*13	Power reverse connection protection, switch output reverse connection protection, switch output load short-circuit protection										
Vibration resistance			10 to 150 Hz, 100 m/s^2, 2 hours each in X, Y, Z directions										
EMC Directive			EN55011, EN61000-6-2, EN61000-4-2/3/4/6/8										
Mounting	Mounting orientation *14		Unrestricted in vertical/horizontal direction										
	Straight piping section *15		Not required										

*1: The value converted to volumetric flow rate at standard conditions (20°C, 1 barometric pressure (101 kPa), 65%RH).
(For gases other than air: 20°C, 1 barometric pressure (101 kPa), 0% RH)
*2: Display at each flow rate is as follows.

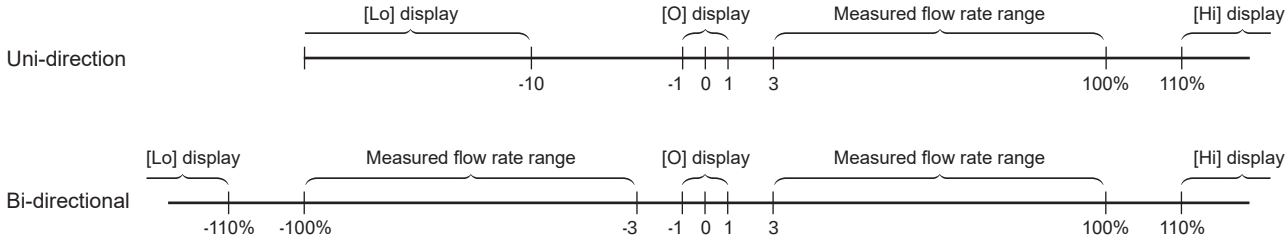

*3:The accumulated flow is a calculated (reference) value. When using the integrated save function, take care to prevent the number of saves from exceeding the access count limit of the storage device (1 million times).(Changes to the settings are counted in number of accesses.)

$$\text{Number of saves} = \frac{\text{Usage time}}{5 \text{ mins}} < 1 \text{ million times}$$

When instantaneous flow rate is below 1% it is not counted as integrating flow.

*4: Use dry gas which does not contain corrosive elements such as chlorine, sulfur or acids, and which is clean and does not contain dust or oil mist. When using compressed air, use clean air that complies with JIS B 8392-1:2012 Class 1.1.1 to 1.6.2. compressed air from the compressor contains drainage (water, oil oxides, foreign matter, etc.). To maintain the function of this product, install a filter, air dryer (min. pressure dew point 10˚C or less), and oil mist filter (max. oil content 0.1 mg/m^3) on the primary side (upstream side) of this product. (Refer to Page 1443 for details on the recommended circuit.) *5: Compressed air is used for adjusting and inspecting this product. Accuracy for gas types other than air is a guideline.

*6: Accuracy is based on a CKD standard flow rate meter. It does not indicate absolute accuracy. Repeatability, temperature characteristics, and pressure characteristics are not included for an accuracy of ± 3% F.S. Consider separately according to the working environment and working conditions.

*7: Repeatability is calculated during a short period of time. Change over time is not included. (Refer to the product specifications sheet for details.)

*8: The actual response time changes depending on the piping conditions. As a guideline, the response time can be set within the range of 50 msec to 1.5 sec.

*9: The output impedance of the analog output section is approx. 1 kΩ. If the impedance of the connecting load is small, output and error increase. Check error with the impedance of the connecting load before using.

*10: The power supply voltage specifications differ for the voltage output type and current output type.

*11: Current for when 24 VDC is connected, and no load is applied. Please note that the current consumption changes depending on the load connection status.

*12: The gas type switching function enables switching to argon, carbon dioxide and a gas mixture of argon 80% + carbon dioxide 20%. (Note that the 500 L/min and 1000 L/min models do not have a gas change function.) The full scale flow rate after switching to carbon dioxide is half the flow rate range. The output type can also be selected for analog output.

gas tumor	Flow direction	Measured flow rate range(□/min)							
		005	010	020	100	200	500	101	201
• Air • Nitrogen • Argon • Argon 80% + Carbon dioxide 20%	Uni-direction	15 to 500mL	30 to 1000mL	0.06 to 2.00L	0.30 to 10.00L	0.6 to 20.0L	1.5 to 50.0L	3.0 to 100.0L	6 to 200L
	Bi-direction	-500 to -15mL	-1000 to -30mL	-2.00 to -0.06L	-10.00 to -0.30L	-20.0 to -0.6L	-50.0 to -1.5L	-100.0 to -3.0L	-200 to -6L
		15 to 500mL	30 to 1000mL	0.06 to 2.00L	0.30 to 10.00L	0.6 to 20.0L	1.5 to 50.0L	3.0 to 100.0L	6 to 200L
• Carbon dioxide	Uni-direction	15 to 250mL	30 to 500mL	0.06 to 1.00L	0.30 to 5.00L	0.6 to 10.0L	1.5 to 25.0L	3.0 to 50.0L	6 to 100L
	Bi-direction	-250 to -15mL	-500 to -30mL	-1.00 to 0.06L	-5.00 to 0.30L	-10.0 to -0.6L	-25.0 to -1.5L	-50.0 to -3.0L	-100 to -6L
		15 to 250mL	30 to 500mL	0.06 to 1.00L	0.30 to 5.00L	0.6 to 10.0L	1.5 to 25.0L	3.0 to 50.0L	6 to 100L

Gas	Flow direction	Analog output			
		Output A		Output B	
		Voltage	Current	Voltage	Current
• Carbon dioxide	Uni-direction	1 to 3 V	4 to 12mA	1 to 5 V	4 to 20mA
	Bi-direction	2 to 4 V	8 to 16mA	1 to 5 V	4 to 20mA

The "Setting copy function" setting is selected at "Ⓖ Output specifications".
Note that the "External input" function is not available on models on which the "Setting copy function" is enabled.

*13: This product's protection circuit is effective only for specific misconnections and load short-circuits. It does not provide protection for all misconnections.

*14: This product measures changes in heat distribution that are caused by flow. If installed vertically, the heat distribution may change due to the effect of convection, and the zero point may be shifted.

*15: Accuracy may be affected by the piping conditions. For more accurate measurements, use a straight pipe with a ten-times greater internal diameter.With the 500 L/min and 1,000 L/min models, use piping with an internal diameter of 9 mm or more. If it is less than 9 mm, accuracy may be negatively affected.

*16: Refer to page 1432 for weight.

How to order

FSM3 - L 005 U 1 BH 1 A 1 N - B M R - P80

- FSM3 — Model No.
- L — Ⓐ Display
- 005 — Ⓑ Flow rate range (Full scale flow rate)
- U — Ⓒ Flow direction
- 1 — Ⓓ Body material/applicable fluids
- BH — Ⓔ Port size
- 1 — Ⓕ Piping direction
- A — Ⓖ Output specifications
- 1 — Ⓗ Unit specifications
- N — Ⓘ Valve option
- B — Ⓙ Lead wire
- M — Ⓚ Mounting attachments
- R — Ⓛ Included documents
- P80 — Ⓜ Clean-room specifications

[Example of model No.]

FSM3-L005U1BH1A1N-BMR-P80

Model: RAPIFLOW FSM3 Series

Ⓐ Display	L	: Liquid crystal display
Ⓑ Flow rate range	005	: 500 mL/min
Ⓒ Flow direction	U	: Uni-direction
Ⓓ Body material/applicable fluids	1	: Resin/air
Ⓔ Port size	BH	: Push-in (ø4 mm for tube)
Ⓕ Piping direction	1	: Straight
Ⓖ Output specifications	A	: Analog voltage output x1, NPN switch output x1, setting copy function
Ⓗ Unit specifications	1	: SI units only
Ⓘ Valve option	N	: None
Ⓙ Lead wire	B	: 5-conductor 3 m
Ⓚ Mounting attachments	M	: DIN rail mount
Ⓛ Included documents	R	: With inspection certification
Ⓜ Clean-room specifications	P80	: Oil-prohibited

Precautions for model No. selection

*1: Refer to the correspondence table on the following page when selecting the model.
*2: For "B: bi-directional" models, the only Ⓘ Valve option is "N: None" Note that "T: with needle valve" and "E: EXA connecting fitting" cannot be selected.
*3: The G thread connection shape is ISO16030-compliant.
*4: Check with the G thread connection shape and dimensions (pages 1378 to 1380) for selection. (G thread connection shape is JIS B 2351-1 O type-compliant)
*5: Note that if you mount the elbow fitting in an upward position, it will interfere with the connector, and if you mount the elbow fitting in a downward position, it will interfere with the DIN rail mounting.
*6: Models with the unit switching function are not sold in Japan.
*7: Connection to solenoid valves (EXA Series) is possible with the dedicated fitting. Refer to page 1442.
*8: Be sure to set EXA to the OUT side of the product. Use a lead wire for the EXA coil option. The DIN terminal box cannot be mounted because it will cause interference. After making sure it is connected firmly, confirm that there is no external leakage.
*9: Ⓜ Clean-room specifications "P70" and "P80" cannot be selected.
*10: Note that the bracket mounting position may interfere with the elbow fitting.
*11: Optional parts are provided with the product. They are not pre-assembled.
*12: The product surface is degreased and cleaned before packaging, and heat-sealed into an antistatic bag on a clean bench (Class 1000 or more).
*13: In addition to P70 specifications, wetted section materials are degreased and cleaned.

Code	Description
Ⓐ Display	
L	Liquid crystal display

Ⓑ Flow rate range (full scale flow rate)

005	500 mL/min	500	50 L/min
010	1000 mL/min	101	100 L/min
020	2 L/min	201	200 L/min
050	5 L/min	501	500 L/min
100	10 L/min	102	1000 L/min
200	20 L/min		

Ⓒ Flow direction *2

U	Uni-direction
B	Bi-direction

Ⓓ Body material/applicable fluids

	Body material	Applicable fluids
1	Resin	Air (gas switchable)

Ⓔ Port size

BH	Push-in (for ø4 mm tube)	AF	G1/8	*3
CH	Push-in (for ø6 mm tube)	BF	G1/4	*3
DH	Push-in (for ø8 mm tube)	CF	G1/2	*3
EH	Push-in (for ø10 mm tube)	AB	G1/8	*4
HH	Push-in (for ø1/4" tube)	BB	G1/4	*4
JH	Push-in (for ø3/8" tube)	CB	G1/2	*4
AA	Rc1/8	AC	NPT1/8	
BA	Rc1/4	BC	NPT1/4	
CA	Rc1/2	CC	NPT1/2	

Ⓕ Piping direction

1	Straight
2	Elbow *5

Ⓖ Output specifications

	Analog output	Switch output	Setting copy function
A	1 point (Voltage output) 1 to 5 V	1 point (NPN)	Yes
B		2 points (NPN)	–
C		1 point (PNP)	Yes
D		2 points (PNP)	
E	1 point (Current output) 4 to 20 mA	1 point (NPN)	Yes
F		2 points (NPN)	–
G		1 point (PNP)	Yes
H		2 points (PNP)	–

Ⓗ Unit specifications

1	SI units only
2	With unit switching function (overseas models only) *6

Ⓘ Valve option *2

N	None
T	With needle valve (only for models 200 L or less)
E	EXA connecting fitting (EXA sold separately) *7, *8, *9

Ⓙ Lead wire

Blank	None
A	5-conductor 1 m
B	5-conductor 3 m

Ⓚ Mounting attachments *10, *11

Blank	None
H	Bracket 1 (for models 200 L or less)
J	Bracket 2 (for 500 or 1000 L models)
K	Panel mounting (for sensor products of models 200 L or less)
L	Panel mounting (for needle valves of models 200 L or less)
M	DIN rail mounting (for models 200 L or less)

Ⓛ Included documents

Blank	None
R	With inspection certification
S	Company certification + Traceability certification

Ⓜ Clean-room specifications

Blank	None	
P70	Anti-dust generation	*12
P80	Oil-prohibited	*13

Compatibility table of flow rate range and port size, needle valve option, and EXA connection fitting

Ⓑ Flow rate range	Ⓔ Port size Ⓕ Piping direction															
	BH1	CH1	DH1	EH1	HH1	JH1	BH2	CH2	DH2	EH2	HH2	JH2	AA1	BA1	CA1	AA2
005	●○	●○			●○		●○	●○			●○		●○			●○
010	●○	●○			●○		●○	●○			●○		●○			●○
020	●○	●○			●○		●○	●○			●○		●○			●○
050	●○	●○			●○		●○	●○			●○		●○			●○
100	●○	●○			●○		●○	●○			●○		●○			●○
200	●○	●○			●○		●○	●○			●○		●○			●○
500		●○	●○		●○			●○	●○		●○		●○	●○★		●○
101			●○	●○		●○			●○	●○		●○		●○★		
201			●○	●○		●○			●○	●○		●○		●○★		
501															●	
102															●	
	BA2	AF1	BF1	CF1	AF2	BF2	AB1	BB1	CB1	AB2	BB2	AC1	BC1	CC1	AC2	BC2
005		●○			●○		●○			●○		●○			●○	
010		●○			●○		●○			●○		●○			●○	
020		●○			●○		●○			●○		●○			●○	
050		●○			●○		●○			●○		●○			●○	
100		●○			●○		●○			●○		●○			●○	
200		●○			●○		●○			●○		●○			●○	
500	●○	●○	●○		●○	●○	●○	●○		●○	●○	●○	●○		●○	●○
101	●○		●○			●○		●○			●○		●○			●○
201	●○		●○			●○		●○			●○		●○			●○
501				●					●					●		
102				●					●					●		

●: Port compatibility ○: Needle valve option compatibility ★: EXA connection fitting compatibility

Compatibility table of port size and clean-room specifications

Ⓜ Clean-room specifications	Ⓔ Port size Ⓕ Piping direction															
	BH1	CH1	DH1	EH1	HH1	JH1	BH2	CH2	DH2	EH2	HH2	JH2	AA1	BA1	CA1	AA2
Blank	●	●	●	●	●	●	●	●	●	●	●	●	●	●	●	●
P70	●	●	●	●	●	●	●	●	●	●	●	●	●	●	●	●
P80	●	●					●	●					●	●	●	●
	BA2	AF1	BF1	CF1	AF2	BF2	AB1	BB1	CB1	AB2	BB2	AC1	BC1	CC1	AC2	BC2
Blank	●	●	●	●	●	●	●	●	●	●	●	●	●	●	●	●
P70	●	●	●	●	●	●	●	●	●	●	●	●	●	●	●	●
P80	●	●	●	●	●	●	●	●	●	●	●	●	●	●	●	●

Dimensions (LCD display)

Port size: Straight ø4 mm, ø6 mm, ø1/4", Rc1/8, G1/8, NPT1/8

● FSM3-LBC1/BH1/CH1/HH1/AA1/AF1/AB1/AC1 (full scale flow rate: 500 mL/min, 1, 2, 5, 10, 20, 50 L/min)

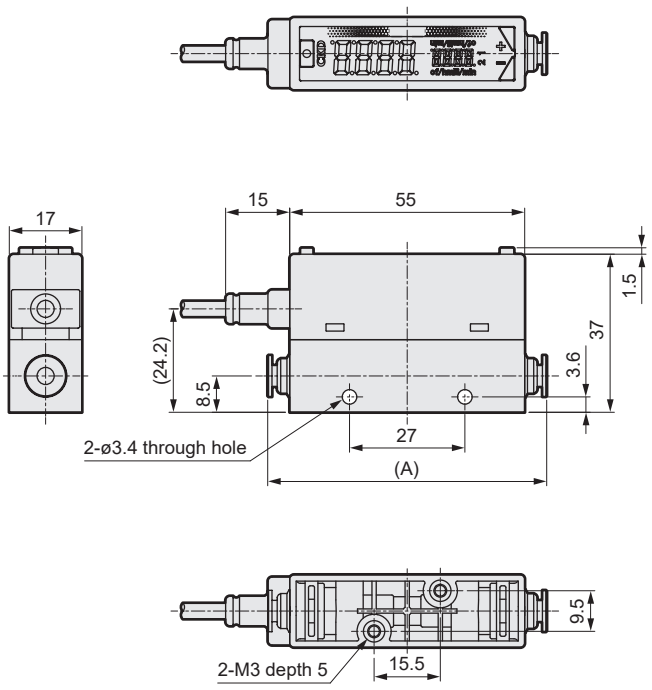

Rc1/8, NPT1/8, G1/8 (AB1)

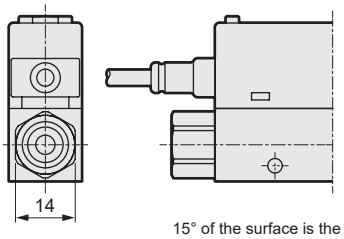

G thread shape (AB)

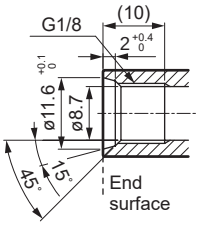

15° of the surface is the seal surface.
Note that it is not the end surface seal. Also, be sure to confirm that the screw depth of the fitting matches before use.

G1/8 (AF1)

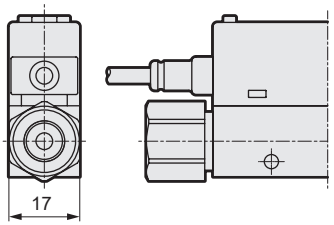

Model No.	Fitting	Dimension (A)
FSM3-L□□1BH1	Push-in ø4 mm	(65)
FSM3-L□□1CH1	Push-in ø6 mm	(67.2)
FSM3-L□□1HH1	Push-in 1/4"	(70.4)
FSM3-L□□1AA1	Rc1/8	(75)
FSM3-L□□1AF1	G1/8	(87)
FSM3-L□□1AB1	G1/8	(87)
FSM3-L□□1AC1	NPT1/8	(75)

Port size: Straight ø8 mm, ø10 mm, ø3/8", Rc1/4, G1/4, NPT1/4

● FSM3-LBC1/DH1/EH1/JH1/BA1/BF1/BB1/BC1 (full scale flow rate: 50, 100, 200 L/min)

*The dedicated adapter for EXA connection is the secondary side (at right in the figure below). For dimensions when connected, refer to page 1442.

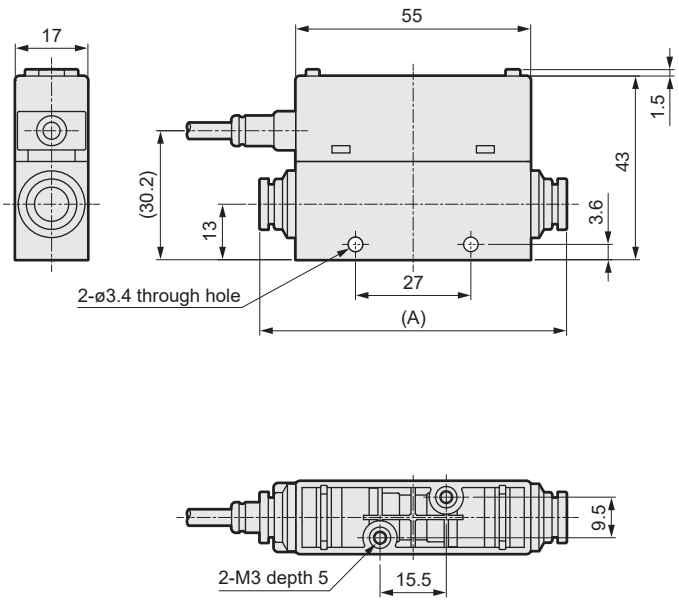

Rc1/4, NPT1/4, G1/4 (BB1)

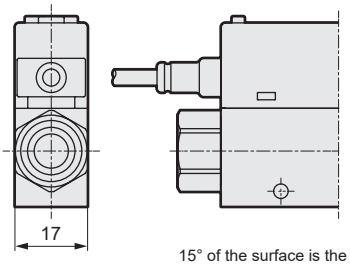

G thread shape (BB)

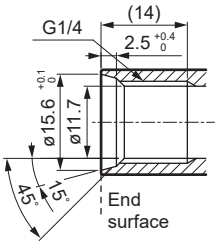

15° of the surface is the seal surface.
Note that it is not the end surface seal. Also, be sure to confirm that the screw depth of the fitting matches before use.

G1/4 (BF1)

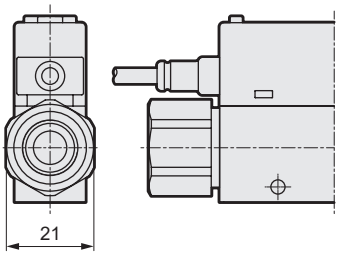

Model No.	Fitting	Dimension (A)
FSM3-L□□1DH1	Push-in ø8 mm	(70.6)
FSM3-L□□1EH1	Push-in ø10 mm	(82.1)
FSM3-L□□1JH1	Push-in 3/8"	(83.4)
FSM3-L□□1BA1	Rc1/4	(75)
FSM3-L□□1BF1	G1/4	(89)
FSM3-L□□1BB1	G1/4	(89)
FSM3-L□□1BC1	NPT1/4	(75)

Dimensions (LCD display)

Port size:Straight Rc1/2, G1/2, NPT1/2

●FSM3-LLoc1/CA1/CF1/CB1/CC1 (full scale flow rate: 500, 1000L/min)

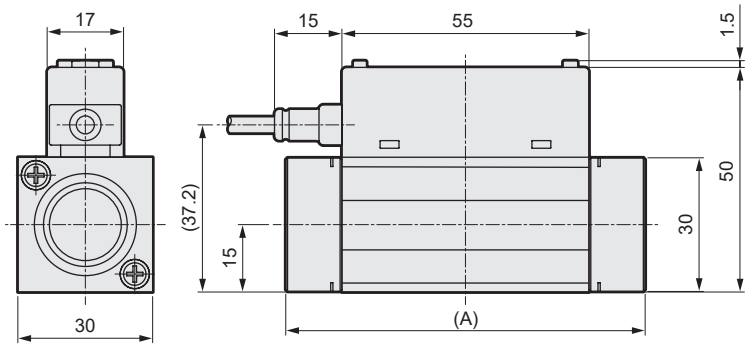

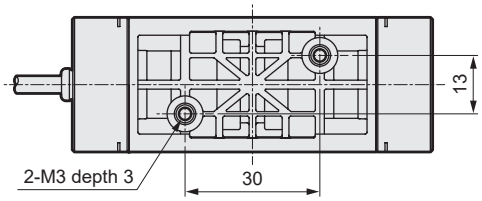

G thread shape (CB)

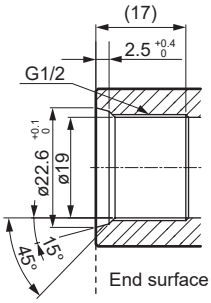

15° of the surface is the seal surface. Note that it is not the end surface seal. Also, be sure to confirm that the screw depth of the fitting matches before use.

G thread shape (CF)

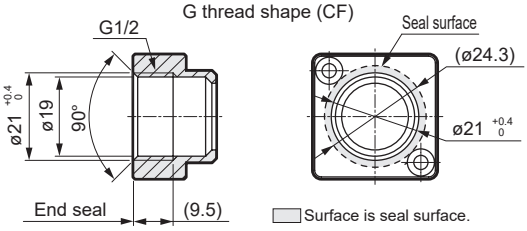

Model No.	Fitting	Dimension (A)
FSM3-L□□1CA1	Rc1/2	(80)
FSM3-L□□1CF1	G1/2	(80)
FSM3-L□□1CB1	G1/2	(95.4)
FSM3-L□□1CC1	NPTG1/2	(80)

Port size: Elbow ø4 mm, ø6 mm, ø1/4", Rc1/8, G1/8, NPT1/8

●FSM3-LLoc1/BH2/CH2/HH2/AA2/AF2/AB2/AC2 (full scale flow rate: 500mL/min, 1, 2, 5, 10, 20, 50L/min)

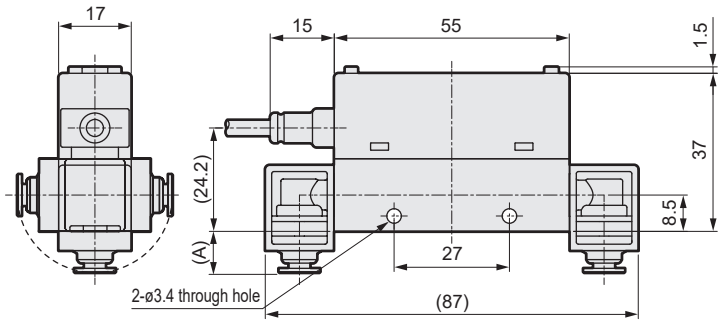

* The top and bottom surfaces of the body are the same as the straight type.

Model No.	Fitting	Dimension (A)
FSM3-L□□1BH2	Push-in ø4 mm	(9.5)
FSM3-L□□1CH2	Push-in ø6 mm	(10.6)
FSM3-L□□1HH2	Push-in 1/4"	(12.2)
FSM3-L□□1AA2	Rc1/8	(14.5)
FSM3-L□□1AF2	G1/8 *	(20.5)
FSM3-L□□1AB2	G1/8 *	(20.5)
FSM3-L□□1AC2	NPT1/8	(14.5)

* For G thread shape, refer to the straight type.

Port size: Elbow ø8 mm, ø10 mm, ø3/8", Rc1/4, G1/4, NPT1/4

●FSM3-LLoc1/DH2/EH2/JH2/BA2/BF2/BB2/BC2 (full scale flow rate: 50, 100, 200L/min)

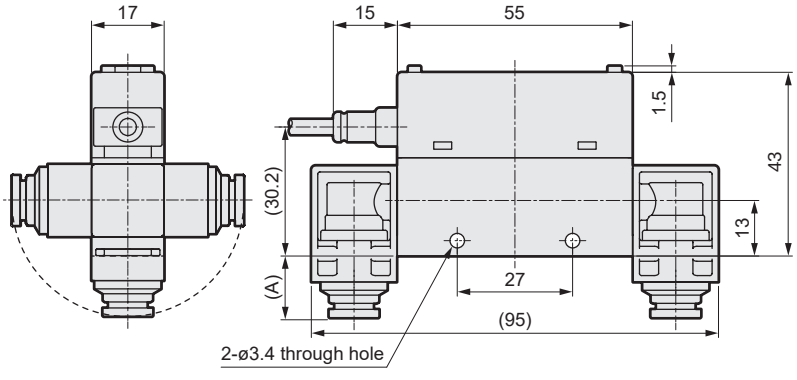

* The top and bottom surfaces of the body are the same as the straight type.

Model No.	Fitting	Dimension (A)
FSM3-L□□1DH2	Push-in ø8 mm	(13.6)
FSM3-L□□1EH2	Push-in ø10 mm	(19.3)
FSM3-L□□1JH2	Push-in 3/8"	(20.0)
FSM3-L□□1BA2	Rc1/4	(15.8)
FSM3-L□□1BF2	G1/4 *	(22.8)
FSM3-L□□1BB2	G1/4 *	(22.8)
FSM3-L□□1BC2	NPT1/4	(15.8)

* For G thread shape, refer to the straight type.

Dimensions with needle valve

Port size: straight ø4 mm, ø6 mm, ø1/4", Rc1/8, G1/8, NPT1/8

●FSM3-LLoc1/BH1/CH1/HH1/AA1/AF1/AB1/AC1/TochiT (full scale flow rate: 500mL/min, 1, 2, 5, 10, 20, 50L/min)

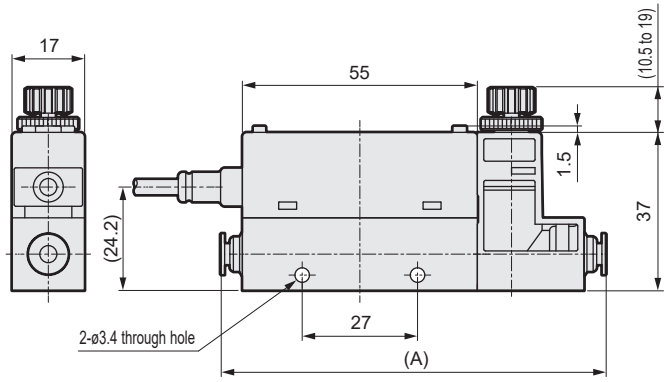

G thread shape (AB)

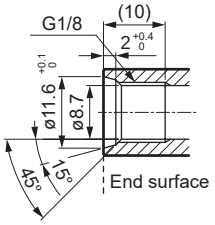

15° of the surface is the seal surface. Note that it is not the end surface seal. Also, be sure to confirm that the screw depth of the fitting matches before use.

*The top and bottom surfaces of the body are the same as the straight type.

Model No.	Fitting	Dimension (A)
FSM3-L□□1BH1	Push-in ø4 mm	(90)
FSM3-L□□1CH1	Push-in ø6 mm	(92.2)
FSM3-L□□1HH1	Push-in 1/4"	(95.4)
FSM3-L□□1AA1	Rc1/8	(100)
FSM3-L□□1AF1	G1/8	(112)
FSM3-L□□1AB1	G1/8	(112)
FSM3-L□□1AC1	NPT1/8	(100)

Port size: straight ø8 mm, ø10 mm, ø3/8", Rc1/4, G1/4, NPT1/4

●FSM3-LLoc1/DH1/EH1/JH1/BA1/BF1/BB1/BC1/TochiT (full scale flow rate: 50, 100, 200L/min)

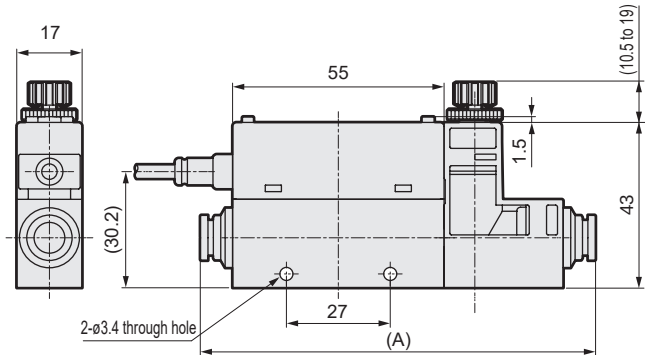

G thread shape (BB)

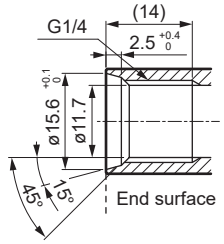

15° of the surface is the seal surface. Note that it is not the end surface seal. Also, be sure to confirm that the screw depth of the fitting matches before use.

*The top and bottom surfaces of the body are the same as the straight type.

Model No.	Fitting	Dimension (A)
FSM3-L□□1DH1	Push-in ø8 mm	(101.6)
FSM3-L□□1EH1	Push-in ø10 mm	(113.1)
FSM3-L□□1JH1	Push-in 3/8"	(114.4)
FSM3-L□□1BA1	Rc1/4	(106)
FSM3-L□□1BF1	G1/4	(120)
FSM3-L□□1BB1	G1/4	(120)
FSM3-L□□1BC1	NPT1/4	(106)

Port size: Elbow ø4 mm, ø6 mm, ø1/4", Rc1/8, G1/8, NPT1/8

●FSM3-LLoc1/BH2/CH2/HH2/AA2/AF2/AB2/AC2 (full scale flow rate: 500mL/min, 1, 2, 5, 10, 20, 50L/min)

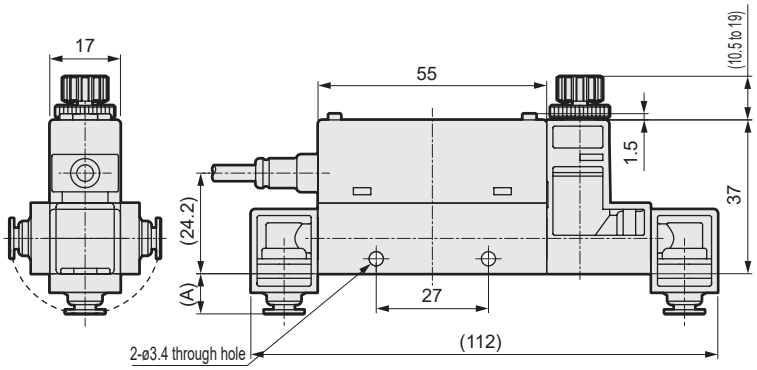

* The top and bottom surfaces of the body are the same as the straight type.

Model No.	Fitting	Dimension (A)
FSM3-L□□1BH2	Push-in ø4 mm	(9.5)
FSM3-L□□1CH2	Push-in ø6 mm	(10.6)
FSM3-L□□1HH2	Push-in 1/4"	(12.2)
FSM3-L□□1AA2	Rc1/8	(14.5)
FSM3-L□□1AF2	G1/8 *	(20.5)
FSM3-L□□1AB2	G1/8 *	(20.5)
FSM3-L□□1AC2	NPT1/8	(14.5)

* For G thread shape, refer to the straight type.

Port size: Elbow ø8 mm, ø10 mm, ø3/8", Rc1/4, G1/4, NPT1/4

●FSM3-LLoc1/DH2/EH2/JH2/BA2/BF2/BB2/BC2 (full scale flow rate: 50, 100, 200L/min)

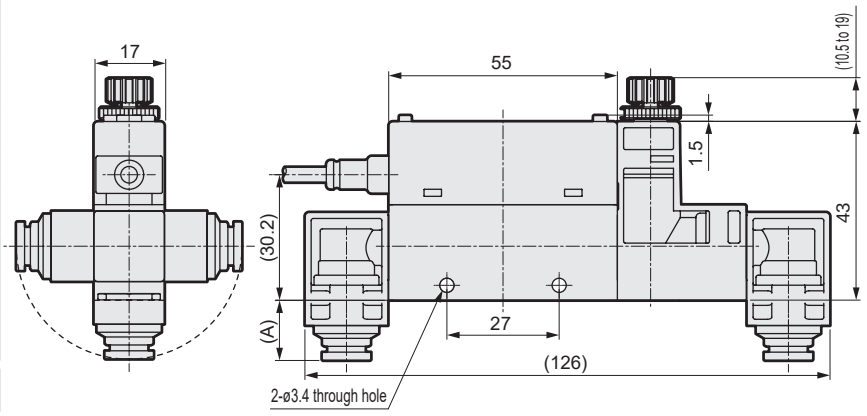

* The top and bottom surfaces of the body are the same as the straight type.

Model No.	Fitting	Dimension (A)
FSM3-L□□1DH2	Push-in ø8 mm	(13.6)
FSM3-L□□1EH2	Push-in ø10 mm	(19.3)
FSM3-L□□1JH2	Push-in 3/8"	(20.0)
FSM3-L□□1BA2	Rc1/4	(15.8)
FSM3-L□□1BF2	G1/4 *	(22.8)
FSM3-L□□1BB2	G1/4 *	(22.8)
FSM3-L□□1BC2	NPT1/4	(15.8)

* For G thread shape, refer to the straight type.

MEMO

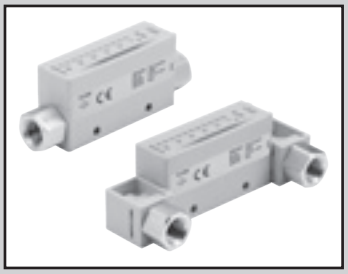

Compact flow rate sensor RAPIFLOW

FSM3 Series

Bar display

● Resin body (flow rate range: 500 mL/min to 1000 L/min)

CE RoHS

Bar display specifications

1 MPa ≈ 145.0 psi, 1 MPa = 10 bar

Item			FSM3-[A][B][C][D][E][F][G][H][I]-[ ]										
			[B]										
			005	010	020	050	100	200	500	101	201	501	102
Flow direction	[C]	U	Uni-direction										
		B	Bi-direction										
Measured flow rate range (□/min) *1	[B]	U	15 to 500 mL	30 to 1000 mL	0.06 to 2.00 L	0.15 to 5.00 L	0.30 to 10.00 L	0.6 to 20.0 L	1.5 to 50.0 L	3.0 to 100.0 L	6 to 200 L	15 to 500 L	30 to 1000 L
		B	-500 to -15, 15 to 500 mL	-1000 to -30, 30 to 1000 mL	-2.00 to -0.06, 0.06 to 2.00 L	-5.00 to -0.15, 0.15 to 5.00 L	-10.00 to -0.30, 0.30 to 10.00 L	-20.0 to -0.6, 0.6 to 20.0 L	-50.0 to -1.5, 1.5 to 50.0 L	-100.0 to -3.0, 3.0 to 100.0 L	-200 to -6, 6 to 200 L	-500 to -15, 15 to 500 L	-1000 to -30, 30 to 1000 L
Display			LED bar display										
Working fluid		Applicable fluids *2	Clean air (JIS B 8392-1:2012 1.1.1 to 5.6.2), compressed air (JIS B 8392-1:2012 1.1.1 to 1.6.2), nitrogen gas										
		Temperature range	0 (32°F) to 50°C (122°F) (no condensation)										
		Pressure range	-0.09 (≈-13 psi, 0 bar) to 0.75 MPa (≈108 psi, 7 bar)										
		Proof pressure	1 MPa (≈145 psi, 10 bar)										
Operating ambient temperature/humidity			0 (32°F) to 50°C (122°F), 90% RH or less										
Storage temperature			-10 (14°F) to 60°C (140°F)										
Accuracy		Accuracy *3	Within ±3% F.S. (Secondary side released to atmosphere) (The scope of warranty is in accordance with the "measurement flow rate range.")										
		Repeatability *4	Within ±1% F.S. (Secondary side released to atmosphere)										
		Temperature characteristics	Within ±0.2% F.S./°C (15 (59°F) to 35°C (95°F), base temperature 25°C (77°F))										
		Pressure characteristics	Within ±5%F.S. (secondary side released to atmosphere reference)								Within ±5% F.S (0.35 MPa (≈50 psi, 3 bar) reference)		
Response time *5			50 msec or less										
Analog output *6	[G]	J	1 to 5 V voltage output (connecting load impedance 50 kΩ or more)										
		K	4 to 20 mA current output (connecting load impedance 0 to 300 Ω)										
Power supply voltage *7		J	12 to 24 VDC (10.8 to 26.4 V) ripple rate 1% or less										
		K	24 VDC (21.6 to 26.4 V) ripple rate 1% or less										
Current consumption *8			45 mA or less										
Lead wire			ø3.7, AWG26 or equivalent x 4-conductor (connector), insulator O.D. 1.0										
Degree of protection			IP40 or equivalent (IEC standard)										
Protection circuit *9			Power reverse connection protection										
Vibration resistance			10 to 150 Hz, 100 m/s^2, 2 hours each in X, Y, Z directions										
EMC Directive			EN55011, EN61000-6-2, EN61000-4-2/3/4/6/8										
Mounting	Mounting orientation *10		Unrestricted in vertical/horizontal direction										
	Straight piping section *11		Not required										

*1: The value converted to volumetric flow rate at standard conditions (20°C, 1 barometric pressure (101 kPa), 65% RH)
*2: Use dry gas which does not contain corrosive elements such as chlorine, sulfur or acids, and which is clean and does not contain dust or oil mist. When using compressed air, use clean air that complies with JIS B 8392-1:2012 Class 1.1.1 to 1.6.2. Compressed air from the compressor contains drainage (water, oil oxides, foreign matter, etc.). To maintain the function of this product, install a filter, air dryer (min. pressure dew point 10˚C or less), and oil mist filter (max. oil content 0.1 mg/m^3) on the primary side (upstream side) of this product. (Refer to Page 1443 for details on the recommended circuit.)
*3: Accuracy is based on a CKD standard flow rate meter. It does not indicate absolute accuracy. Repeatability, temperature characteristics, and pressure characteristics are not included for an accuracy of ± 3% F.S. Consider separately according to the working environment and working conditions.
*4: Repeatability calculated during a short time. Change over time is not included. (Refer to the product specifications for details.)
*5: The actual response time changes depending on the piping conditions.
*6: The output impedance of the analog output section is approx. 1 kΩ. If the impedance of the connecting load is small, output and error increase. Check error with the impedance of the connecting load before using.
*7: The power supply voltage specifications differ for the voltage output type and current output type.
*8: Current for when 24 VDC is connected, and no load is applied. Please note that the current consumption changes depending on the load connection status.
*9: This product's protection circuit is effective only for specific misconnections and load short-circuits. It does not provide protection for all misconnections.
*10: This product measures changes in heat distribution that are caused by flow. If installed vertically, the heat distribution may change due to the effect of convection, and the zero point may be shifted.
*11: Accuracy may be affected by the piping conditions. For more accurate measurements, use a straight pipe with a ten-times greater internal diameter. With the 500 L/min and 1,000 L/min models, use piping with an internal diameter of 9 mm or more. If it is less than 9 mm, accuracy may be negatively affected.
*12: Refer to page 1432 for weight.

How to order

FSM3 - B 005 U 1 BH 1 J 1 N - D H S - P70

- FSM3 — Model No.
- B — Ⓐ Display
- 005 — Ⓑ Flow rate range (full scale flow rate)
- U — Ⓒ Flow direction
- 1 — Ⓓ Body material/applicable fluids
- BH — Ⓔ Port size
- 1 — Ⓕ Piping direction
- J — Ⓖ Output specifications
- 1 — Ⓗ Unit specifications
- N — Ⓘ Valve option
- D — Ⓙ Lead wire
- H — Ⓚ Mounting attachments
- S — Ⓛ Included documents
- P70 — Ⓜ Clean-room specifications

[Example of model No.]

FSM3-B005U1BH1J1N-DHS-P70

Model: RAPIFLOW FSM3 Series

Ⓐ Display	B	: Bar display
Ⓑ Flow rate range	005	: 500 mL/min
Ⓒ Flow direction	U	: Uni-direction
Ⓓ Body material/applicable fluids	1	: Resin/air
Ⓔ Port size	BH	: Push-in (ø4 mm for tube)
Ⓕ Piping direction	1	: Straight
Ⓖ Output specifications	J	: Analog voltage output x1
Ⓗ Unit specifications	1	: SI units only
Ⓘ Valve option	N	: None
Ⓙ Lead wire	D	: 4-conductor 3 m
Ⓚ Mounting attachments	H	: Bracket
Ⓛ Included documents	S	: Company certification + traceability certificate
Ⓜ Clean-room specifications	P70	: Anti-dust generation

Precautions for model No. selection

*1: Refer to the correspondence table on the following page when selecting the model.
*2: When using in combination with separated display (FSM2-D), select ""J": Analog voltage output x 1 point."
*3: For "B: bi-directional" models, the only Ⓘ Valve option is "N: None." Note that "E: EXA connecting fitting" cannot be selected.
*4: The G thread connection shape is ISO16030-compliant.
*5: Check with the G thread connection shape and dimensions (pages 1386 to 1387) for selection. (G thread connection shape is JIS B 2351-1 O type-compliant)
*6: Note that mounting the elbow upward will interfere with the connector and downward with the DIN rail mounting.
*7: Connection to solenoid valves (EXA Series) is possible with the dedicated fitting. Page 1442.
*8: Be sure to set EXA to the OUT side of the product.
Use a lead wire for the EXA coil option. The DIN terminal box cannot be mounted because it will cause interference. After making sure it is connected firmly, confirm that there is no external leakage.
*9: Ⓜ Clean-room specifications "P70" and "P80" cannot be selected.
*10: "Panel mount" option cannot be selected.
Note that the bracket mounting position may interfere with the elbow fitting.
*11: Optional parts are provided with the product. They are not pre-assembled.
*12: The product surface is degreased and cleaned before packaging, and heat-sealed into an antistatic bag on a clean bench (Class 1000 or more).
*13: In addition to P70 specifications, wetted section materials are degreased and cleaned.

Code	Description
Ⓐ Display	
B	Bar display

Ⓑ Flow rate range (full scale flow rate)

005	500 mL/min	500	50 L/min
010	1000 mL/min	101	100 L/min
020	2 L/min	201	200 L/min
050	5 L/min	501	500 L/min
100	10 L/min	102	1000 L/min
200	20 L/min		

Ⓒ Flow direction *3

U	Uni-direction
B	Bi-direction

Ⓓ Body material/applicable fluids

	Body material	Applicable fluids
1	Resin	Air

Ⓔ Port size

BH	Push-in (for ø4 mm tube)	AF	G1/8	*4
CH	Push-in (for ø6 mm tube)	BF	G1/4	*4
DH	Push-in (for ø8 mm tube)	CF	G1/2	*4
EH	Push-in (for ø10 mm tube)	AB	G1/8	*5
HH	Push-in (for ø1/4" tube)	BB	G1/4	*5
JH	Push-in (for ø3/8" tube)	CB	G1/2	*5
AA	Rc1/8	AC	NPT1/8	
BA	Rc1/4	BC	NPT1/4	
CA	Rc1/2	CC	NPT1/2	

Ⓕ Piping direction

1	Straight
2	Elbow *6

Ⓖ Output specifications *2

J	Analog voltage output x 1 point
K	Analog current output x 1 point

Ⓗ Unit specifications

1	SI units only

Ⓘ Valve option *3

N	None
E	EXA connecting fitting (EXA sold separately) *7, *8, *9

Ⓙ Lead wire

Blank	None
C	4-conductor 1 m
D	4-conductor 3 m

Ⓚ Mounting attachments *10, *11

Blank	None
H	Bracket 1 (for models 200 L or less)
J	Bracket 2 (for 500 or 1000 L models)
M	DIN rail mounting (for models 200 L or less)

Ⓛ Included documents

Blank	None
R	Company certification
S	Company certification + traceability certificate

Ⓜ Clean-room specifications

Blank	None	
P70	Anti-dust generation	*12
P80	Oil-prohibited	*13

Compatibility table of flow rate range and port size, and EXA connection fitting

B Flow rate range	E Port size F Piping direction															
	BH1	CH1	DH1	EH1	HH1	JH1	BH2	CH2	DH2	EH2	HH2	JH2	AA1	BA1	CA1	AA2
005	●	●			●		●	●			●		●			●
010	●	●			●		●	●			●		●			●
020	●	●			●		●	●			●		●			●
050	●	●			●		●	●			●		●			●
100	●	●			●		●	●			●		●			●
200	●	●			●		●	●			●		●			●
500		●	●		●			●	●		●		●	●★		●
101			●	●		●			●	●		●		●★		
201			●	●		●			●	●		●		●★		
501															●	
102															●	
	BA2	AF1	BF1	CF1	AF2	BF2	AB1	BB1	CB1	AB2	BB2	AC1	BC1	CC1	AC2	BC2
005		●			●		●			●		●			●	
010		●			●		●			●		●			●	
020		●			●		●			●		●			●	
050		●			●		●			●		●			●	
100		●			●		●			●		●			●	
200		●			●		●			●		●			●	
500	●	●	●		●	●	●	●		●	●	●	●		●	●
101	●		●			●		●			●		●			●
201	●		●			●		●			●		●			●
501				●					●					●		
102				●					●					●		

●: Port compatibility ★: EXA connection fitting compatibility

Compatibility table of port size and clean-room specifications

M Clean-room specifications	E Port size F Piping direction															
	BH1	CH1	DH1	EH1	HH1	JH1	BH2	CH2	DH2	EH2	HH2	JH2	AA1	BA1	CA1	AA2
Blank	●	●	●	●	●	●	●	●	●	●	●	●	●	●	●	●
P70	●	●	●	●	●	●	●	●	●	●	●	●	●	●	●	●
P80	●	●					●	●					●	●	●	●
	BA2	AF1	BF1	CF1	AF2	BF2	AB1	BB1	CB1	AB2	BB2	AC1	BC1	CC1	AC2	BC2
Blank	●	●	●	●	●	●	●	●	●	●	●	●	●	●	●	●
P70	●	●	●	●	●	●	●	●	●	●	●	●	●	●	●	●
P80	●	●	●	●	●	●	●	●	●	●	●	●	●	●	●	●

Dimensions (bar display)

Port size: Straight ø4 mm, ø6 mm, ø1/4", Rc1/8, G1/8, NPT1/8

● FSM3-B□□1/BH1/CH1/HH1/AA1/AF1/AB1/AC1 (full scale flow rate: 500 mL/min, 1, 2, 5, 10, 20, 50 L/min)

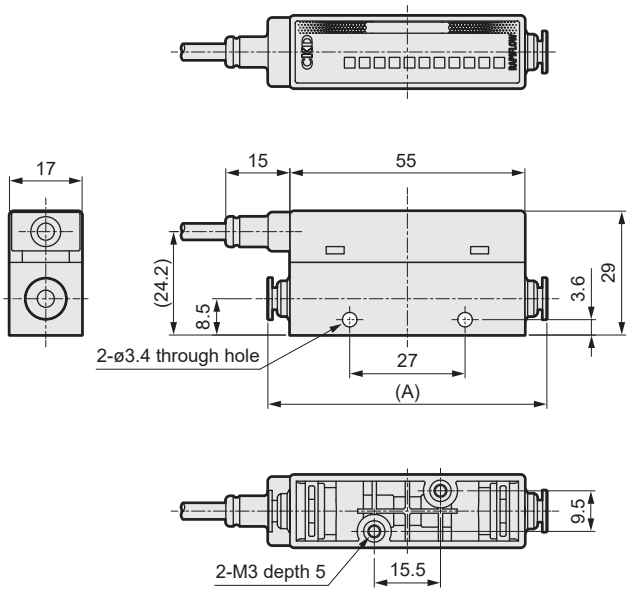

Rc1/8, NPT1/8, G1/8 (AB1)

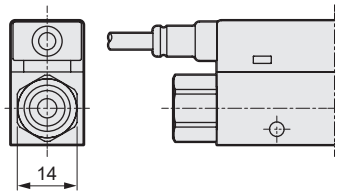

G thread shape (AB)

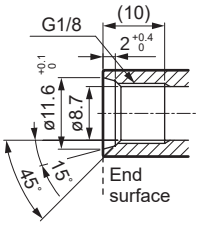

15° of the surface is the seal surface.
Note that it is not the end surface seal. Also, be sure to confirm that the screw depth of the fitting matches before use.

G1/8 (AF1)

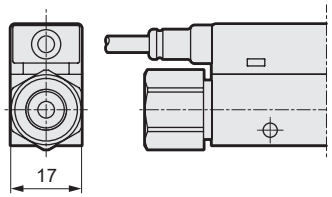

Model No.	Fitting	Dimension (A)
FSM3-B□□1BH1	Push-in ø4 mm	(65)
FSM3-B□□1CH1	Push-in ø6 mm	(67.2)
FSM3-B□□1HH1	Push-in 1/4"	(70.4)
FSM3-B□□1AA1	Rc1/8	(75)
FSM3-B□□1AF1	G1/8	(87)
FSM3-B□□1AB1	G1/8	(87)
FSM3-B□□1AC1	NPT1/8	(75)

Port size: Straight ø8 mm, ø10 mm, ø3/8", Rc1/4, G1/4, NPT1/4

● FSM3-B□□1/DH1/EH1/JH1/BA1/BF1/BB1/BC1 (full scale flow rate: 50, 100, 200 L/min)

*The dedicated adapter for EXA connection is the secondary side (at right in the figure below). For dimensions when connected, refer to page 1442.

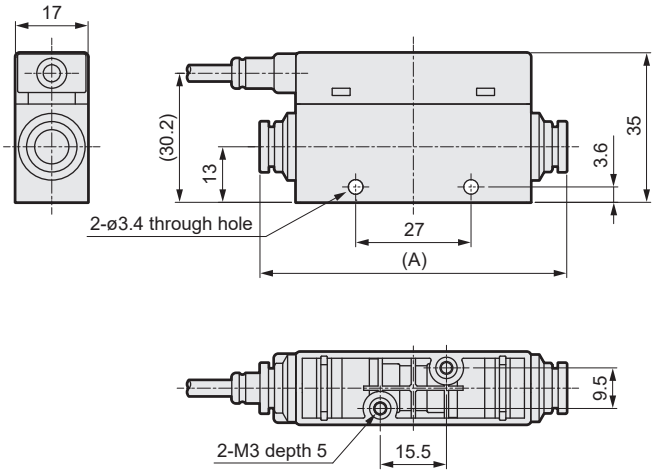

Rc1/4, NPT1/4, G1/4 (BB1)

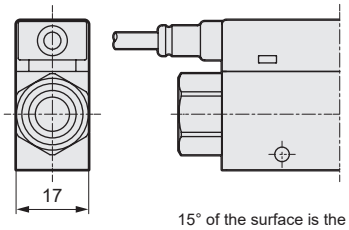

G thread shape (BB)

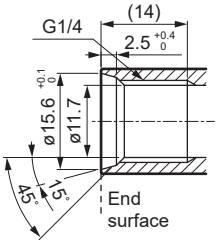

15° of the surface is the seal surface.
Note that it is not the end surface seal. Also, be sure to confirm that the screw depth of the fitting matches before use.

G1/4 (BF1)

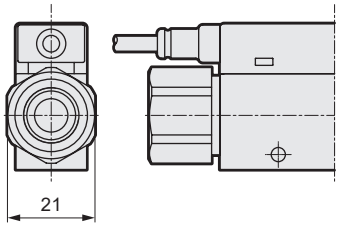

Model No.	Fitting	Dimension (A)
FSM3-B□□1DH1	Push-in ø8 mm	(70.6)
FSM3-B□□1EH1	Push-in ø10 mm	(82.1)
FSM3-B□□1JH1	Push-in 3/8"	(83.4)
FSM3-B□□1BA1	Rc1/4	(75)
FSM3-B□□1BF1	G1/4	(89)
FSM3-B□□1BB1	G1/4	(89)
FSM3-B□□1BC1	NPT1/4	(75)

Dimensions (bar display)

Port size:Straight Rc1/2, G1/2, NPT1/2

●FSM3-BLoc1/CA1/CF1/CB1/CC1 (full scale flow rate: 500, 1000L/min)

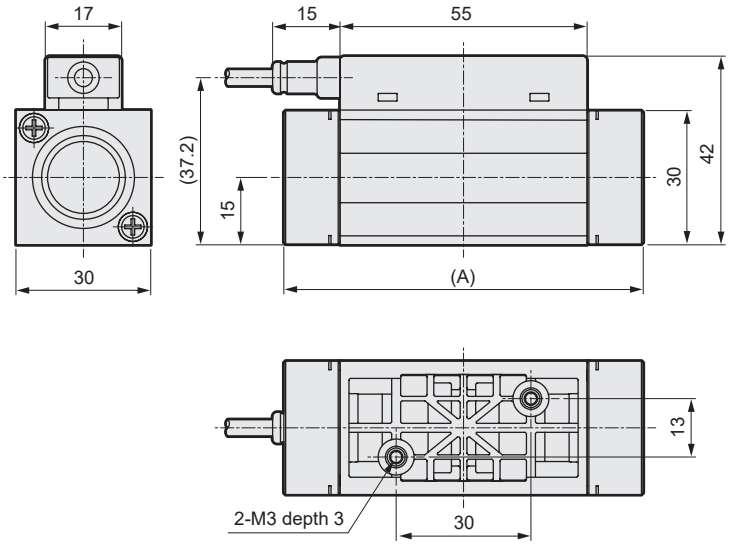

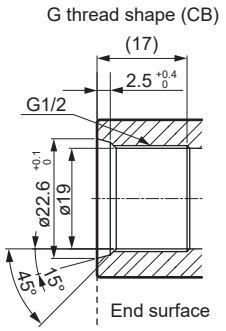

15° of the surface is the seal surface. Note that it is not the end surface seal. Also, be sure to confirm that the screw depth of the fitting matches before use.

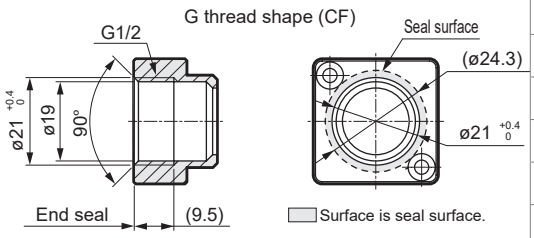

Model No.	Fitting	Dimension (A)
FSM3-B□□1CA1	Rc1/2	(80)
FSM3-B□□1CF1	G1/2	(80)
FSM3-B□□1CB1	G1/2	(95.4)
FSM3-B□□1CC1	NPT1/2	(80)

Port size: Elbow ø4 mm, ø6 mm, ø1/4", Rc1/8, G1/8, NPT1/8

●FSM3-B[B][C]1/BH2/CH2/HH2/AA2/AF2/AB2/AC2 (full scale flow rate: 500mL/min, 1, 2, 5, 10, 20, 50L/min)

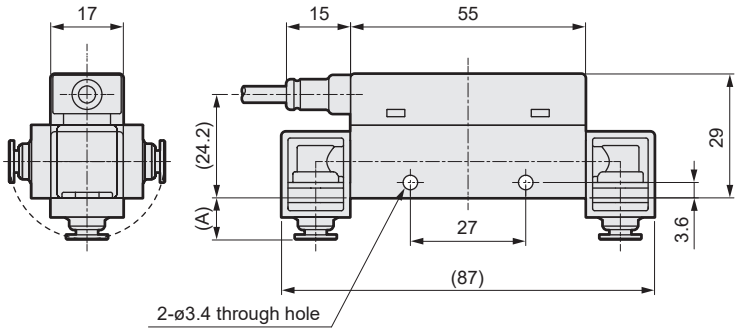

* The top and bottom surfaces of the body are the same as the straight type.

Model No.	Fitting	Dimension (A)
FSM3-B□□1BH2	Push-in ø4 mm	(9.5)
FSM3-B□□1CH2	Push-in ø6 mm	(10.6)
FSM3-B□□1HH2	Push-in 1/4"	(12.2)
FSM3-B□□1AA2	Rc1/8	(14.5)
FSM3-B□□1AF2	G1/8 *	(20.5)
FSM3-B□□1AB2	G1/8 *	(20.5)
FSM3-B□□1AC2	NPT1/8	(14.5)

* For G thread shape, refer to the straight type.

Port size: Elbow ø8 mm, ø10 mm, ø3/8", Rc1/4, G1/4, NPT1/4

●FSM3-B[B][C]1/DH2/EH2/JH2/BA2/BF2/BB2/BC2 (full scale flow rate: 50, 100, 200L/min)

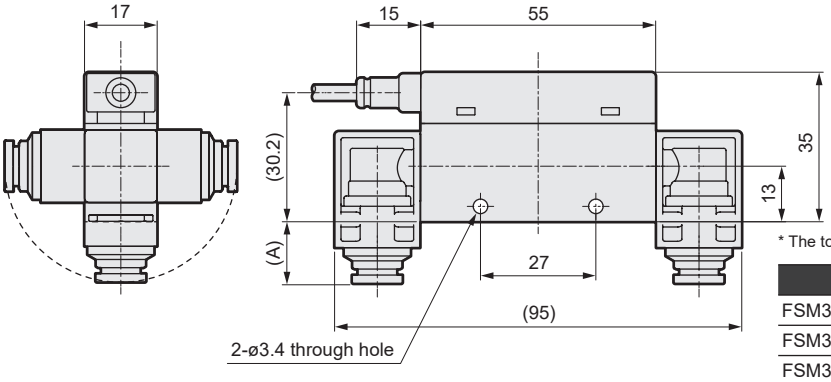

* The top and bottom surfaces of the body are the same as the straight type.

Model No.	Fitting	Dimension (A)
FSM3-B□□1DH2	Push-in ø8 mm	(13.6)
FSM3-B□□1EH2	Push-in ø10 mm	(19.3)
FSM3-B□□1JH2	Push-in 3/8"	(20.0)
FSM3-B□□1BA2	Rc1/4	(15.8)
FSM3-B□□1BF2	G1/4 *	(22.8)
FSM3-B□□1BB2	G1/4 *	(22.8)
FSM3-B□□1BC2	NPT1/4	(15.8)

* For G thread shape, refer to the straight type.

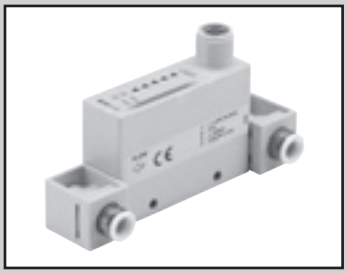

Compact flow rate sensor RAPIFLOW

FSM3 Series

IO-Link

● Resin body (flow rate range: 500 mL/min to 1000 L/min)

IO-Link specifications

1 MPa ≈ 145.0 psi, 1 MPa = 10 bar

Item			FSM3-[A][B][C][D][E][F][G][H][I]-[ ]										
			[B]										
			005	010	020	050	100	200	500	101	201	501	102
Flow direction	[C]	U	Uni-direction										
		B	Bi-direction										
Measured flow rate range (□/min) *1	[B]	U	15 to 500 mL	30 to 1000 mL	0.06 to 2.00 L	0.15 to 5.00 L	0.30 to 10.00 L	0.6 to 20.0 L	1.5 to 50.0 L	3.0 to 100.0 L	6 to 200 L	15 to 500 L	30 to 1000 L
		B	-500 to -15, 15 to 500 mL	-1000 to -30, 30 to 1000 mL	-2.00 to -0.06, 0.06 to 2.00 L	-5.00 to -0.15, 0.15 to 5.00 L	-10.00 to -0.30, 0.30 to 10.00 L	-20.0 to -0.6, 0.6 to 20.0 L	-50.0 to -1.5, 1.5 to 50.0 L	-100.0 to -3.0, 3.0 to 100.0 L	-200 to -6, 6 to 200 L	-500 to -15, 15 to 500 L	-1000 to -30, 30 to 1000 L
Display			LED display (power and status indicators)										
Working fluid		Applicable fluids *2	Clean air (JIS B 8392-1:2012 1.1.1 to 5.6.2), compressed air (JIS B 8392-1:2012 1.1.1 to 1.6.2), nitrogen gas										
			Argon, carbon dioxide, and gas mixture (argon + carbon dioxide)									–	
		Temperature range	0 (32°F) to 50°C (122°F) (no condensation)										
		Pressure range	-0.09 (≈-13 psi, 0 bar) to 0.75 MPa (≈108 psi, 7bar)										
		Proof pressure	1 MPa (≈145 psi, 10 bar)										
Operating ambient temperature/humidity			0 (32°F) to 50°C (122°F), 90% RH or less										
Storage temperature			-10 (14°F) to 60°C (140°F)										
Accuracy *3 (Fluid: in dry air)		Accuracy *4	Within ±3% F.S. (Secondary side released to atmosphere) (The scope of warranty is in accordance with the "measurement flow rate range.")										
		Repeatability *5	Within ±1% F.S. (Secondary side released to atmosphere)										
		Temperature characteristics	Within ±0.2% F.S./°C (15 (59°F) to 35°C (95°F), base temperature 25°C (77°F))										
		Pressure characteristics	Within ±5%F.S. (secondary side released to atmosphere reference)								Within ±5% F.S (0.35 MPa (≈50 psi, 3 bar) reference)		
Response time		*6	50 msec or less										
Power supply voltage			18 to 30 VDC (ripple rate 1% or less)										
Current consumption		*7	45 mA or less										
Lead wire		*8	M12 both-end connector lead wire (3 m), AWG#23 or equivalent, 4-conductor										
Functions		*9	(1) Gas type selection, (2) flow rate integration, (3) peak hold, etc.										
Degree of protection			IP40 or equivalent (IEC standard)										
Protection circuit		*10	Power reverse connection protection										
Vibration resistance		*11	10 to 150 Hz, 100 m/s^2, 2 hours each in X, Y, Z directions										
EMC Directive			EN55011, EN61000-6-2, EN61000-4-2/3/4/6/8										
Mounting	Mounting orientation	*12	Unrestricted in vertical/horizontal direction										
	Straight piping section	*13	Not required										

*Refer to page 1438 for communication specifications.

*1: The value converted to volumetric flow rate at standard conditions (20°C, 1 barometric pressure (101 kPa), 65% RH)
(For gases other than air: 20°C, 1 barometric pressure (101 kPa), 0% RH)

*2: Use dry gas which does not contain corrosive elements such as chlorine, sulfur or acids, and which is clean and does not contain dust or oil mist. When using compressed air, use clean air that complies with JIS B 8392-1:2012 Class 1.1.1 to 1.6.2. Compressed air from the compressor contains drainage (water, oil oxides, foreign matter, etc.). To maintain the function of this product, install a filter, air dryer (min. pressure dew point 10˚C or less), and oil mist filter (max. oil content 0.1 mg/m^3) on the primary side (upstream side) of this product. (Refer to Page 1443 for details on the recommended circuit.) *3: Compressed air is used for adjusting and inspecting this product. Accuracy for gas types other than air is a guideline.

*4: Accuracy is based on a CKD standard flow rate meter. It does not indicate absolute accuracy. Repeatability, temperature characteristics, and pressure characteristics are not included for an accuracy of ± 3% F.S. Consider separately according to the working environment and working conditions.

*5: Repeatability calculated during a short time. Change over time is not included. (Refer to the product specifications for details.)

*6: The actual response time changes depending on the piping conditions.

*7: Current for when 24 VDC is connected, and no load is applied. Please note that the current consumption changes depending on the load connection status.

*8: The male end is straight, and the female end is angled. (Refer to page 1440.) Tighten the M12 connector with a torque of 0.5 N·m or lower. Tightening with excessive force may lead to damage.

*9: The gas type switching function enables switching to argon, carbon dioxide and a gas mixture of argon 80% + carbon dioxide 20%.
The measurement flow rate ranges after switching are as follows. (Note that the 500 L/min and 1000 L/min models do not have a gas change function.)

Gas	Flow direction	Measurement flow rate range (□/min)							
		005	010	020	100	200	500	101	201
· Air · Nitrogen · Argon · Argon 80% + carbon dioxide 20%	Uni-direction	15 to 500 mL	30 to 1000 mL	0.06 to 2.00 L	0.30 to 10.00 L	0.6 to 20.0 L	1.5 to 50.0 L	3.0 to 100.0 L	6 to 200 L
	Bi-direction	-500 to -15 mL	-1000 to -30 mL	-2.00 to -0.06 L	-10.00 to -0.30 L	-20.0 to -0.6 L	-50.0 to -1.5 L	-100.0 to -3.0 L	-200 to -6 L
		15 to 500 mL	30 to 1000 mL	0.06 to 2.00 L	0.30 to 10.00 L	0.6 to 20.0 L	1.5 to 50.0 L	3.0 to 100.0 L	6 to 200 L
· Carbon dioxide	Uni-direction	15 to 250 mL	30 to 500 mL	0.06 to 1.00 L	0.30 to 5.00 L	0.6 to 10.0 L	1.5 to 25.0 L	3.0 to 50.0 L	6 to 100 L
	Bi-direction	-250 to -15 mL	-500 to -30 mL	-1.00 to -0.06 L	-5.00 to -0.30 L	-10.0 to -0.6 L	-25.0 to -1.5 L	-50.0 to -3.0 L	-100 to -6 L
		15 to 250 mL	30 to 500 mL	0.06 to 1.00 L	0.30 to 5.00 L	0.6 to 10.0 L	1.5 to 25.0 L	3.0 to 50.0 L	6 to 100 L

The accumulated flow is a reference value.
When using the integrated save function, take care to prevent the number of saves from exceeding the access count limit of the storage device (1 million times).
(Changes to the settings are counted in number of accesses.)

$$\text{Number of saves} = \frac{\text{Usage time}}{5 \text{ mins}} < 1 \text{ million times}$$

*10: This product's protection circuit is effective only for specific misconnections and load short-circuits. It does not provide protection for all misconnections.

*11: A communication error may occur depending on the vibration conditions. Install this product in a place not subject to vibration.

*12: This product measures changes in heat distribution that are caused by flow. If installed vertically, the heat distribution may change due to the effect of convection, and the zero point may be shifted.

*13: Accuracy may be affected by the piping conditions. For more accurate measurements, use a straight pipe with a ten-times greater internal diameter. With the 500 L/min and 1,000 L/min models, use piping with an internal diameter of 9 mm or more. If it is less than 9 mm, accuracy may be negatively affected.

*14: Refer to page 1432 for weight.

How to order

FSM3 - C 005 U 1 BH 1 L 1 N - G H R - P70

Model No.
Ⓐ Display
Ⓑ Flow rate range (full scale flow rate)
Ⓒ Flow direction
Ⓓ Body material/applicable fluids
Ⓔ Port size
Ⓕ Piping direction
Ⓖ Output specifications
Ⓗ Unit specifications
Ⓘ Valve option
Ⓙ Lead wire
Ⓚ Mounting attachments
Ⓛ Included documents
Ⓜ Clean-room specifications

[Example of model No.]
FSM3-C005U1BH1L1N-GHR-P70

Model: RAPIFLOW FSM3 Series

Ⓐ Display	C	: IO-Link
Ⓑ Flow rate range	005	: 500 mL/min
Ⓒ Flow direction	U	: Uni-direction
Ⓓ Body material/applicable fluids	1	: Resin/air
Ⓔ Port size	BH	: Push-in (ø4 mm for tube)
Ⓕ Piping direction	1	: Straight
Ⓖ Output specifications	L	: IO-Link
Ⓗ Unit specifications	1	: SI units only
Ⓘ Valve option	N	: None
Ⓙ Lead wire	G	: M12 both-end lead wire with connector (3 m)
Ⓚ Mounting attachments	H	: Bracket
Ⓛ Included documents	R	: Company certification
Ⓜ Clean-room specifications	P70	: Anti-dust generation

Precautions for model No. selection

*1: Refer to the correspondence table on the following page when selecting the model.
*2: The G thread connection shape is ISO16030-compliant.
*3: Check with the G thread connection shape and dimensions (pages 1392 to 1393) for selection. (G thread connection shape is JIS B 2351-1 O type-compliant)
*4: Note that mounting the elbow upward will interfere with the connector and downward with the DIN rail mounting.
*5: Note that the bracket mounting position may interfere with the elbow fitting.
*6: Optional parts are provided with the product. They are not pre-assembled.
*7: The product surface is degreased and cleaned before packaging, and heat-sealed into an antistatic bag on a clean bench (Class 1000 or more).
*8: In addition to P70 specifications, wetted section materials are degreased and cleaned.

Code	Description
Ⓐ Display	
C	IO-Link

Ⓑ Flow rate range (full scale flow rate)

005	500 mL/min	500	50 L/min
010	1000 mL/min	101	100 L/min
020	2 L/min	201	200 L/min
050	5 L/min	501	500 L/min
100	10 L/min	102	1000 L/min
200	20 L/min		

Ⓒ Flow direction

U	Uni-direction
B	Bi-direction

Ⓓ Body material/applicable fluids

	Body material	Applicable fluids
1	Resin	Air (gas switchable)

Ⓔ Port size

BH	Push-in (for ø4 mm tube)	AF	G1/8	*2
CH	Push-in (for ø6 mm tube)	BF	G1/4	*2
DH	Push-in (for ø8 mm tube)	CF	G1/2	*2
EH	Push-in (for ø10 mm tube)	AB	G1/8	*3
HH	Push-in (for ø1/4" tube)	BB	G1/4	*3
JH	Push-in (for ø3/8" tube)	CB	G1/2	*3
AA	Rc1/8	AC	NPT1/8	
BA	Rc1/4	BC	NPT1/4	
CA	Rc1/2	CC	NPT1/2	

Ⓕ Piping direction

1	Straight
2	Elbow *4

Ⓖ Output specifications

L	IO-Link communication

Ⓗ Unit specifications

1	SI units only

Ⓘ Valve option

N	None

Ⓙ Lead wire

Blank	None
G	M12 both-end lead wire with connector (3 m)

Ⓚ Mounting attachments *5, *6

Blank	None
H	Bracket 1 (for models 200 L or less)
J	Bracket 2 (for 500 or 1000 L models)
M	DIN rail mounting (for models 200 L or less)

Ⓛ Included documents

Blank	None
R	Company certification
S	Company certification + traceability certificate

Ⓜ Clean-room specifications

Blank	None
P70	Anti-dust generation *7
P80	Oil-prohibited *8

Flow rate range and port size

Ⓑ Flow rate range	Ⓔ Port size Ⓕ Piping direction															
	BH1	CH1	DH1	EH1	HH1	JH1	BH2	CH2	DH2	EH2	HH2	JH2	AA1	BA1	CA1	AA2
005	●	●			●		●	●			●		●			●
010	●	●			●		●	●			●		●			●
020	●	●			●		●	●			●		●			●
050	●	●			●		●	●			●		●			●
100	●	●			●		●	●			●		●			●
200	●	●			●		●	●			●		●			●
500		●	●		●			●	●		●		●	●		●
101			●	●		●			●	●		●		●		
201			●	●		●			●	●		●		●		
501															●	
102															●	
	BA2	AF1	BF1	CF1	AF2	BF2	AB1	BB1	CB1	AB2	BB2	AC1	BC1	CC1	AC2	BC2
005		●			●		●			●		●			●	
010		●			●		●			●		●			●	
020		●			●		●			●		●			●	
050		●			●		●			●		●			●	
100		●			●		●			●		●			●	
200		●			●		●			●		●			●	
500	●	●	●		●	●	●	●		●	●	●	●		●	●
101	●		●			●		●			●		●			●
201	●		●			●		●			●		●			●
501				●					●					●		
102				●					●					●		

●: Port size compatibility

Compatibility table of port size and clean-room specifications

Ⓜ Clean-room specifications	Ⓔ Port size Ⓕ Piping direction															
	BH1	CH1	DH1	EH1	HH1	JH1	BH2	CH2	DH2	EH2	HH2	JH2	AA1	BA1	CA1	AA2
Blank	●	●	●	●	●	●	●	●	●	●	●	●	●	●	●	●
P70	●	●	●	●	●	●	●	●	●	●	●	●	●	●	●	●
P80	●	●					●	●					●	●	●	●
	BA2	AF1	BF1	CF1	AF2	BF2	AB1	BB1	CB1	AB2	BB2	AC1	BC1	CC1	AC2	BC2
Blank	●	●	●	●	●	●	●	●	●	●	●	●	●	●	●	●
P70	●	●	●	●	●	●	●	●	●	●	●	●	●	●	●	●
P80	●	●	●	●	●	●	●	●	●	●	●	●	●	●	●	●

Dimensions (IO-Link)

Port size: Straight ø4 mm, ø6 mm, ø1/4", Rc1/8, G1/8, NPT1/8

● FSM3-CBC1/BH1/CH1/HH1/AA1/AF1/AB1/AC1 (full scale flow rate: 500 mL/min, 1, 2, 5, 10, 20, 50 L/min)

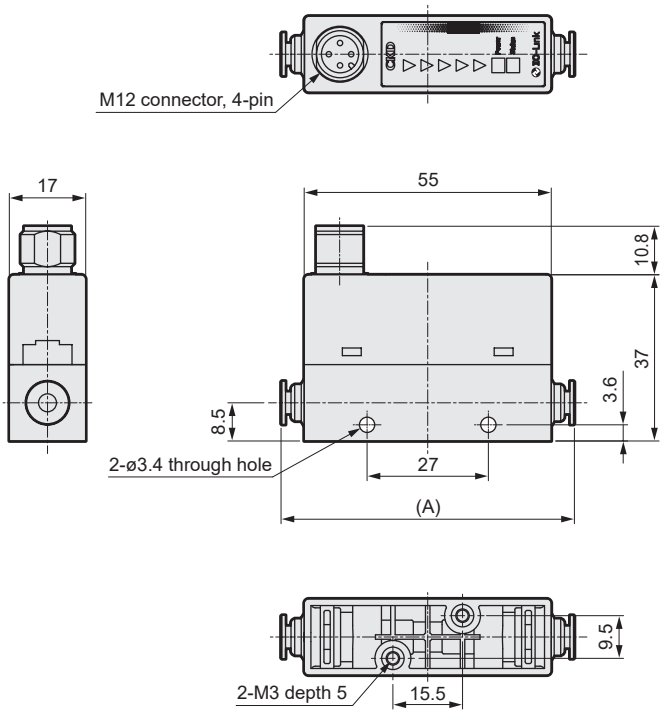

Rc1/8, NPT1/8, G1/8 (AB1)

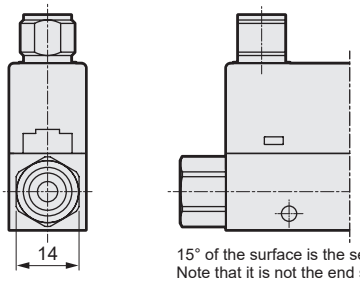

G thread shape (AB)

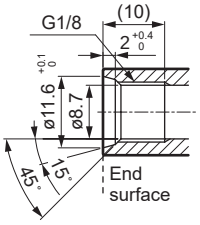

15° of the surface is the seal surface.
Note that it is not the end surface seal. Also, be sure to confirm that the screw depth of the fitting matches before use.

G1/8 (AF1)

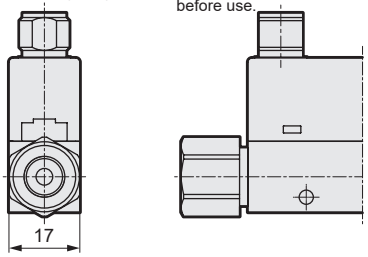

Model No.	Fitting	Dimension (A)
FSM3-C□□1BH1	Push-in ø4 mm	(65)
FSM3-C□□1CH1	Push-in ø6 mm	(67.2)
FSM3-C□□1HH1	Push-in 1/4"	(70.4)
FSM3-C□□1AA1	Rc1/8	(75)
FSM3-C□□1AF1	G1/8	(87)
FSM3-C□□1AB1	G1/8	(87)
FSM3-C□□1AC1	NPT1/8	(75)

Port size: Straight ø8 mm, ø10 mm, ø3/8", Rc1/4, G1/4, NPT1/4

● FSM3-CBC1/DH1/EH1/JH1/BA1/BF1/BB1/BC1 (full scale flow rate: 50, 100, 200 L/min)

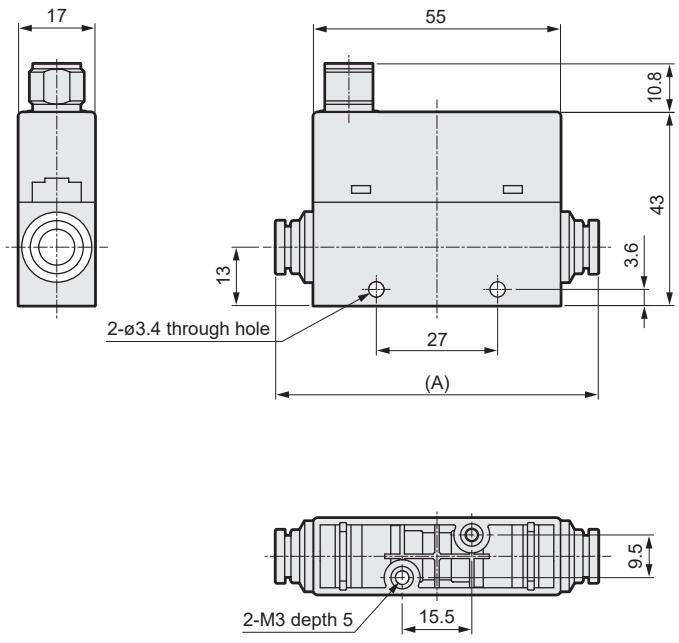

Rc1/4, NPT1/4, G1/4 (BB1)

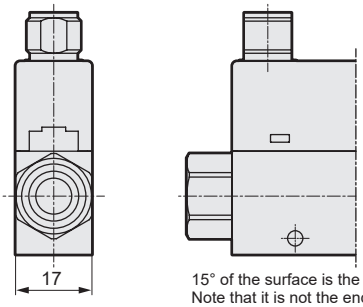

G thread shape (BB)

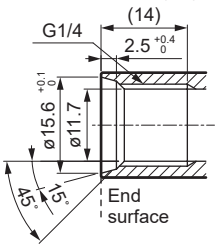

15° of the surface is the seal surface.
Note that it is not the end surface seal. Also, be sure to confirm that the screw depth of the fitting matches before use.

G1/4 (BF1)

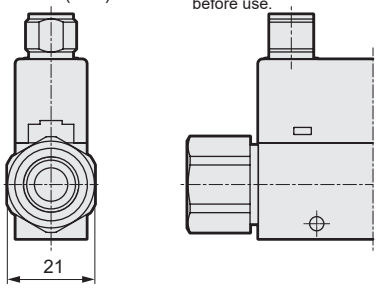

Model No.	Fitting	Dimension (A)
FSM3-C□□1DH1	Push-in ø8 mm	(70.6)
FSM3-C□□1EH1	Push-in ø10 mm	(82.1)
FSM3-C□□1JH1	Push-in 3/8"	(83.4)
FSM3-C□□1BA1	Rc1/4	(75)
FSM3-C□□1BF1	G1/4	(89)
FSM3-C□□1BB1	G1/4	(89)
FSM3-C□□1BC1	NPT1/4	(75)

Dimensions (IO-Link)

Port size:Straight Rc1/2, G1/2, NPT1/2

●FSM3-C[B][C]1/CA1/CF1/CB1/CC1 (full scale flow rate: 500, 1000L/min)

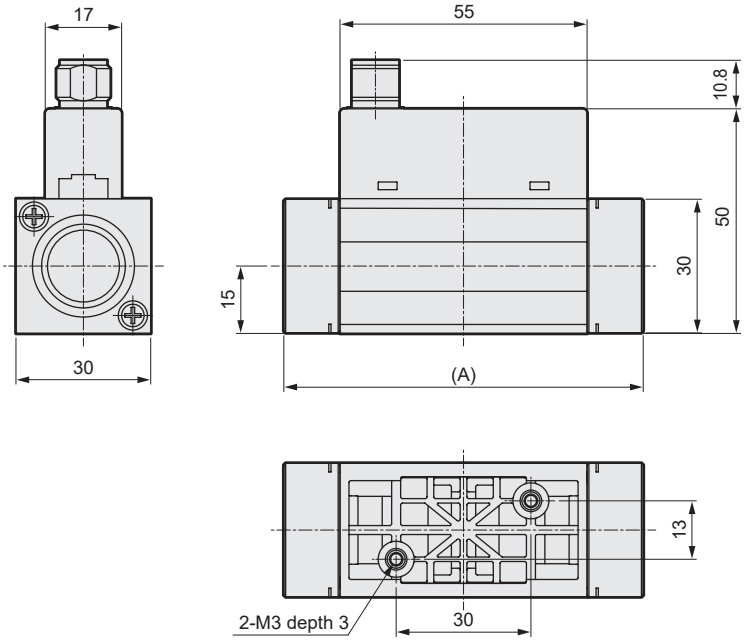

G thread shape (CB)

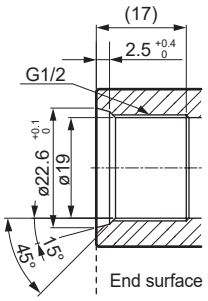

15° of the surface is the seal surface. Note that it is not the end surface seal. Also, be sure to confirm that the screw depth of the fitting matches before use.

G thread shape (CF)

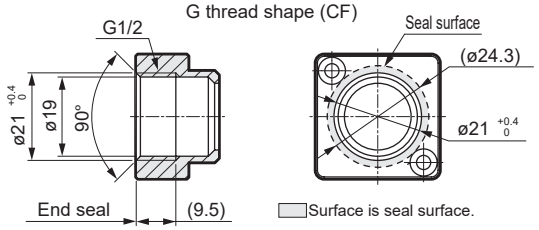

Model No.	Fitting	Dimension (A)
FSM3-C□□1CA1	Rc1/2	(80)
FSM3-C□□1CF1	G1/2	(80)
FSM3-C□□1CB1	G1/2	(95.4)
FSM3-C□□1CC1	NPT1/2	(80)

Port size: Elbow ø4 mm, ø6 mm, ø1/4", Rc1/8, G1/8, NPT1/8

●FSM3-C[B][C]1/BH2/CH2/HH2/AA2/AF2/AB2/AC2 (full scale flow rate: 500mL/min, 1, 2, 5, 10, 20, 50L/min)

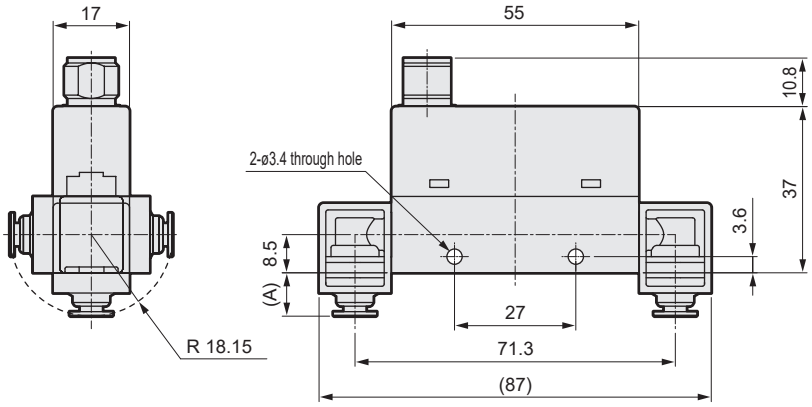

* The top and bottom surfaces of the body are the same as the straight type.

Model No.	Fitting	Dimension (A)
FSM3-C□□1BH2	Push-in ø4 mm	(9.5)
FSM3-C□□1CH2	Push-in ø6 mm	(10.6)
FSM3-C□□1HH2	Push-in 1/4"	(12.2)
FSM3-C□□1AA2	Rc1/8	(14.5)
FSM3-C□□1AF2	G1/8 *	(20.5)
FSM3-C□□1AB2	G1/8 *	(20.5)
FSM3-C□□1AC2	NPT1/8	(14.5)

* For G thread shape, refer to the straight type.

Port size: Elbow ø8 mm, ø10 mm, ø3/8", Rc1/4, G1/4, NPT1/4

●FSM3-C[B][C]1/DH2/EH2/JH2/BA2/BF2/BB2/BC2 (full scale flow rate: 50, 100, 200L/min)

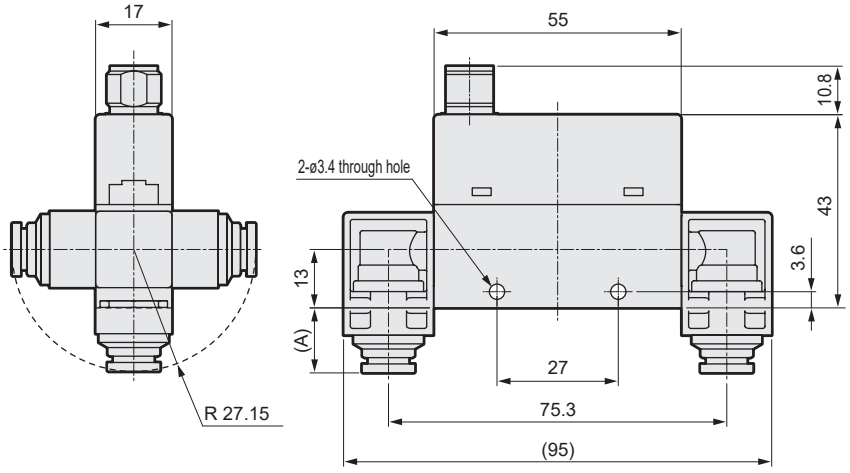

* The top and bottom surfaces of the body are the same as the straight type.

Model No.	Fitting	Dimension (A)
FSM3-C□□1DH2	Push-in ø8 mm	(13.6)
FSM3-C□□1EH2	Push-in ø10 mm	(19.3)
FSM3-C□□1JH2	Push-in 3/8"	(20.0)
FSM3-C□□1BA2	Rc1/4	(15.8)
FSM3-C□□1BF2	G1/4 *	(22.8)
FSM3-C□□1BB2	G1/4 *	(22.8)
FSM3-C□□1BC2	NPT1/4	(15.8)

* For G thread shape, refer to the straight type.

Internal structure

● FSM3-B005 to 500

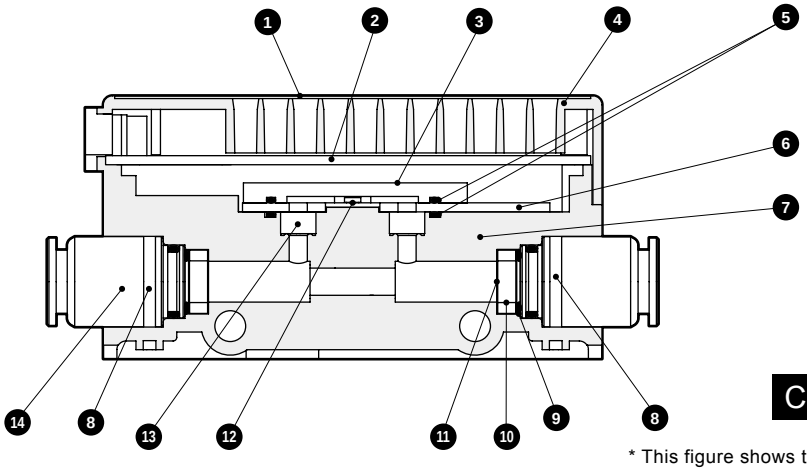

Cannot be disassembled

* This figure shows the bar display with straight fitting.
* The part materials are subject to change without notice.

No.	Part name		Material	No.	Part name		Material
1	Front sheet		PET film	8	Fitting fixing pin		Stainless steel
2	Electronic circuit board		Glass epoxy resin	9	O-ring	(*)	Fluoro rubber
3	Sensor cover	(*)	Stainless steel	10	Spacer	(*)	Aluminum
4	Case		Polyamide resin	11	Port filter	(*)	Stainless steel
5	Gasket	(*)	Fluoro rubber	12	Sensor chip	(*)	Semiconductor silicon
6	Sensor board	(*)	Glass epoxy resin	13	Bypass filter	(*)	Stainless steel
7	Sensor body	(*)	Polyamide resin	14	Fitting		-

(*): Cleaning parts for P80 specifications.

● FSM3-L500 to 201

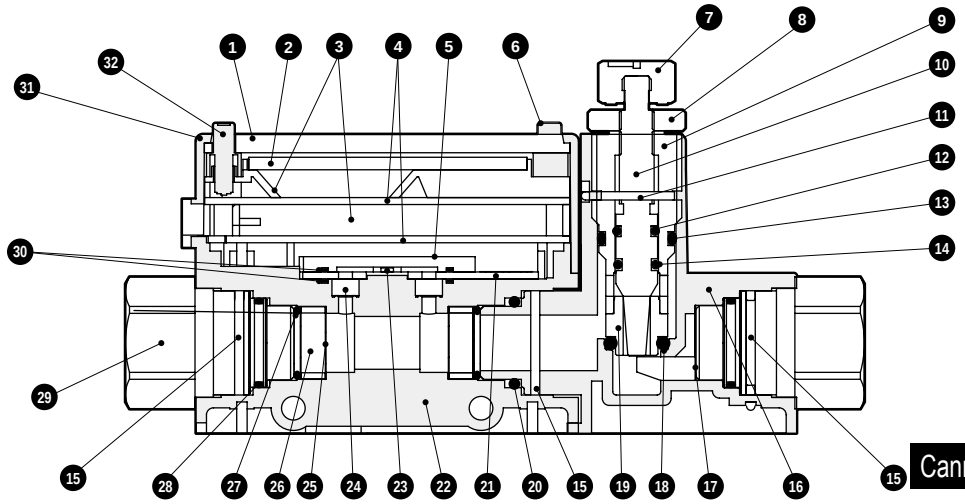

Cannot be disassembled

* This figure shows the LCD display with needle valve.
* The part materials are subject to change without notice.

No.	Part name		Material	No.	Part name		Material
1	Liquid crystal cover		Acrylic resin	17	Port filter	(*)	Stainless steel
2	Liquid crystal		-	18	O-ring	(*)	Fluoro rubber
3	Base spacer		Polycarbonate resin	19	Orifice	(*)	Copper alloy/nickeling
4	Electronic circuit board		Glass epoxy resin	20	O-ring	(*)	Fluoro rubber
5	Sensor cover	(*)	Stainless steel	21	Sensor board	(*)	Glass epoxy resin
6	Switch		Ethylene/propylene rubber	22	Sensor body	(*)	Polyamide resin
7	Knob		Polybutylene terephthalate	23	Sensor chip	(*)	Semiconductor silicon
8	Lock nut		Copper alloy/nickeling	24	Bypass filter	(*)	Stainless steel
9	Needle guide	(*)	Copper alloy/nickeling	25	Port filter	(*)	Stainless steel
10	Needle	(*)	Copper alloy/nickeling	26	Spacer	(*)	Aluminum
11	Fixing pin		Stainless steel	27	O-ring	(*)	Fluoro rubber
12	O-ring	(*)	Fluoro rubber	28	O-ring	(*)	Fluoro rubber
13	O-ring	(*)	Fluoro rubber	29	Fitting (Rc1/4)	(*)	Aluminum
14	O-ring	(*)	Fluoro rubber	30	Gasket	(*)	Fluoro rubber
15	Fitting fixing pin		Stainless steel	31	Case		Polyamide resin
16	Needle valve body	(*)	Polyamide resin	32	Switch		Ethylene/propylene rubber

(*): Cleaning parts for P80 specifications.

Internal structure

● FSM3-L501/102

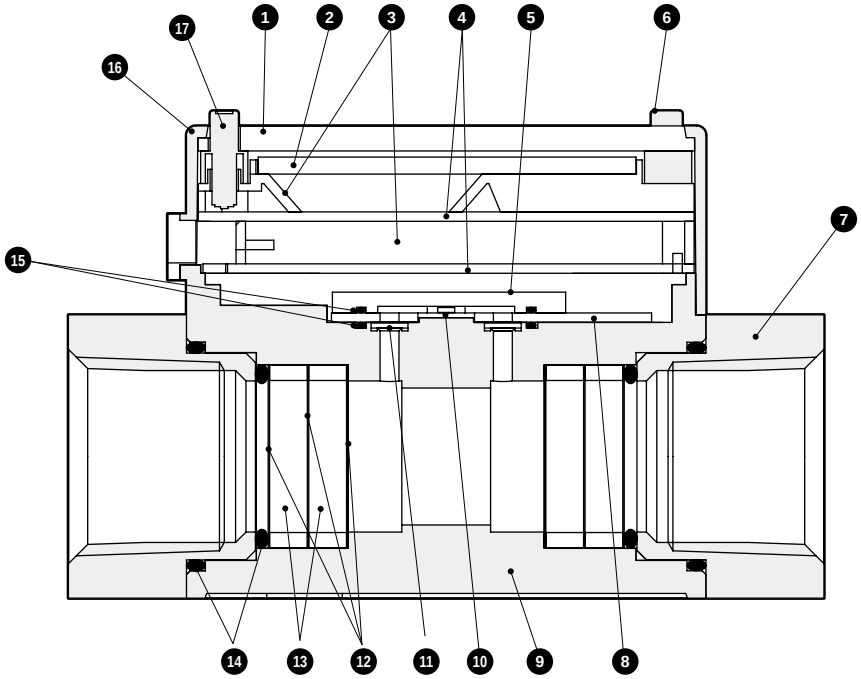

Cannot be disassembled

* This figure shows the LCD display.
* The part materials are subject to change without notice.

No.	Part name		Material	No.	Part name		Material
1	Liquid crystal cover		Acrylic resin	10	Sensor chip	(*)	Semiconductor silicon
2	Liquid crystal		-	11	Bypass filter	(*)	Stainless steel
3	Base spacer		Polycarbonate resin	12	Port filter	(*)	Stainless steel
4	Electronic circuit board		Glass epoxy resin	13	Spacer	(*)	Aluminum
5	Sensor cover	(*)	Stainless steel	14	O-ring	(*)	Fluoro rubber
6	Switch		Ethylene/propylene rubber	15	Gasket	(*)	Fluoro rubber
7	Fitting (Rc1/2)	(*)	Aluminum	16	Case		Polyamide resin
8	Sensor board	(*)	Glass epoxy resin	17	Switch		Ethylene/propylene rubber
9	Sensor body	(*)	Polyamide resin				

(*): Cleaning parts for P80 specifications.

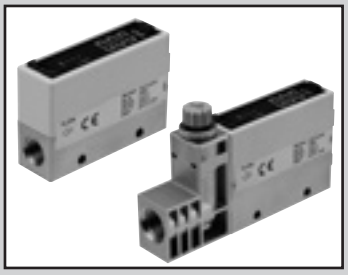

Compact flow rate sensor RAPIFLOW

FSM3 Series

LCD display

● Stainless steel body (flow rate range: 500 mL/min to 1000 L/min)

CE RoHS

LCD display specifications

1 MPa ≈ 145.0 psi, 1 MPa = 10 bar

Item			FSM3-[A][B][C][D][E][F][G][H][I]-[ ]										
			[B]										
			005	010	020	050	100	200	500	101	201	501	102
Flow direction	[C]	U	Uni-direction										
		B	Bi-direction										
Measured flow rate range (□/min) *1	[B]	U	15 to 500 mL	30 to 1000 mL	0.06 to 2.00 L	0.15 to 5.00 L	0.30 to 10.00 L	0.6 to 20.0 L	1.5 to 50.0 L	3.0 to 100.0 L	6 to 200 L	15 to 500 L	30 to 1000 L
		B	-500 to -15, 15 to 500 mL	-1000 to -30, 30 to 1000 mL	-2.00 to -0.06, 0.06 to 2.00 L	-5.00 to -0.15, 0.15 to 5.00 L	-10.00 to -0.30, 0.30 to 10.00 L	-20.0 to -0.6, 0.6 to 20.0 L	-50.0 to -1.5, 1.5 to 50.0 L	-100.0 to -3.0, 3.0 to 100.0 L	-200 to -6, 6 to 200 L	-500 to -15, 15 to 500 L	-1000 to -30, 30 to 1000 L
Display			4 digit + 4 digit 2 color LCD										
Flow rate display range (□/min) *2	[B]	U	-49 to 549 mL	-99 to 1099 mL	-0.19 to 2.19 L	-0.49 to 5.49 L	-0.99 to 10.99 L	-1.9 to 21.9 L	-4.9 to 54.9 L	-9.9 to 109.9 L	-19 to 219 L	-49 to 549 L	-99 to 1099 L
		B	-549 to 549 mL	-1099 to 1099 mL	-2.19 to 2.19 L	-5.49 to 5.49 L	-10.99 to 10.99 L	-21.9 to 21.9 L	-54.9 to 54.9 L	-109.9 to 109.9 L	-219 to 219 L	-549 to 549 L	-1099 to 1099 L
Integration display *3		Display range	0 to ±9,999,999 mL		0.00 to ±99,999.99 L			0.0 to ±999999.9 L			0 to ±9,999,999 L		
		Pulse output rate	5 mL	10 mL	0.02 L	0.05 L	0.1 L	0.2 L	0.5 L	1 L	2 L	5 L	10 L
Working conditions		Applicable fluids *4	Clean air (JIS B 8392-1:2012 1.1.1 to 5.6.2), compressed air (JIS B 8392-1:2012 1.1.1 to 1.6.2), nitrogen gas										
			Argon, carbon dioxide, and gas mixture (argon + carbon dioxide)									–	
			Oxygen (When oxygen specifications are selected, the clean-room specifications of M cannot be selected.) Specifications automatically become oil-prohibited specifications.)									–	
		Temperature range	0 (32°F) to 50°C (122°F) (no condensation)										
		Pressure range	-0.09 (≈-13 psi, 0 bar) to 1.00 MPa (≈145 psi, 10 bar)									-0.09 (≈-13 psi, 0 bar) to 0.75 MPa (≈108 psi, 7 bar)	
		Proof pressure	1.5 MPa (≈217 psi, 15 bar)										
Operating ambient temperature/humidity			0 (32°F) to 50°C (122°F), 90% RH or less										
Storage temperature			-10 (14°F) to 60°C (140°F)										
Accuracy *5 (Fluid: in dry air)		Accuracy *6	Within ±3% F.S. (Secondary side released to atmosphere) (The scope of warranty is in accordance with the "measurement flow rate range.")										
		Repeatability *7	Within ±1% F.S. (Secondary side released to atmosphere)										
		Temperature characteristics	Within ±0.2% F.S./°C (15 (59°F) to 35°C (95°F), base temperature 25°C (77°F))										
		Pressure characteristics	Within ±5%F.S. (secondary side released to atmosphere reference)								Within ±5% F.S (0.35 MPa (≈50 psi, 3 bar) reference)		
Response time *8			50 msec or less (setting response time OFF)										
Switch output	[G]	A, B, E, F	NPN open collector output (50 mA or less, voltage drop 2.4 V or less)										
		C, D, G, H	PNP open collector output (50 mA or less, voltage drop 2.4 V or less)										
Analog output *9		A, B, C, D	1 to 5 V voltage output (connecting load impedance 50 kΩ or more)										
		E, F, G, H	4 to 20 mA current output (connecting load impedance 0 to 300 Ω)										
Power supply voltage *10		A, B, C, D	12 to 24 VDC (10.8 to 26.4 V) ripple rate 1% or less										
		E, F, G, H	24 VDC (21.6 to 26.4 V) ripple rate 1% or less										
Current consumption *11			45 mA or less										
Lead wire			ø3.7, AWG26 or equivalent x 5-conductor (connector), insulator O.D. 1.0										
Functions *12			(1) Gas type selection, (2) setting copy function, (3) flow rate integration, (4) peak hold, etc.										
Degree of protection			IP40 or equivalent (IEC standard)										
Protection circuit *13			Power reverse connection protection, switch output reverse connection protection, switch output load short-circuit protection										
Vibration resistance			10 to 150 Hz, 100 m/s², 2 hours each in X, Y, Z directions										
EMC Directive			EN55011, EN61000-6-2, EN61000-4-2/3/4/6/8										
Mounting	Mounting orientation *14		Unrestricted in vertical/horizontal direction										
	Straight piping section *15		Not required										

*1: The value converted to volumetric flow rate at standard condition (20°C 1 barometric pressure (101 kPa) 65% RH).
(For gases other than air, 20°C, 1 barometric pressure (101 kPa), relative humidity 0%Rh.

*2: Display at each flow rate is as follows.

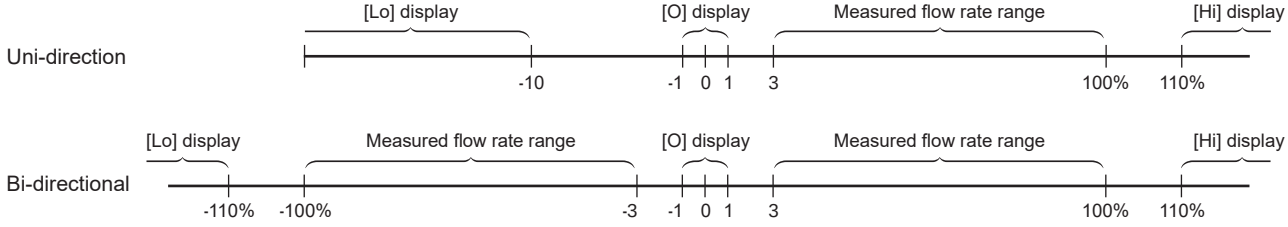

*3: The accumulated flow is a calculated (reference) value. When using the integrated save function, take care to prevent the number of saves from exceeding the access count limit of the storage device (1 million times).(Changes to the settings are counted in number of accesses.)

$$\text{Number of saves} = \frac{\text{Usage time}}{\text{5 mins}} < \text{1 million times}$$

When instantaneous flow rate is below 1% it is not counted as integrating flow.

*4: Use dry gas which does not contain corrosive elements such as chlorine, sulfur or acids, and which is clean and does not contain dust or oil mist. When using compressed air, use clean air that complies with JIS B 8392-1:2012 Class 1.1.1 to 1.6.2. Compressed air from the compressor contains drainage (water, oil oxides, foreign matter, etc.). To maintain the function of this product, install a filter, air dryer (min. pressure dew point 10˚C or less), and oil mist filter (max. oil content 0.1 mg/m^3) on the primary side (upstream side) of this product. (Refer to Page 1443 for details on the recommended circuit.) The sensor for oxygen gas is a custom model. To prevent ignition accidents, do not allow oxygen to flow again when a fluid other than oxygen has flowed even once.

*5: Compressed air is used for adjusting and inspecting this product. Accuracy for gas types other than air is a guideline.

*6: Accuracy is based on a CKD standard flow rate meter. It does not indicate absolute accuracy. Repeatability, temperature characteristics, and pressure characteristics are not included for an accuracy of ± 3% F.S. Consider separately according to the working environment and working conditions.

*7: Repeatability is calculated during a short period of time. Change over time is not included. (Refer to the product specifications sheet for details.)

*8: The actual response time changes depending on the piping conditions. As a guideline, the response time can be set within the range of 50 msec to 1.5 sec.

*9: The output impedance of the analog output section is approx. 1 kΩ. If the impedance of the connecting load is small, output and error increase. Check error with the impedance of the connecting load before using.

*10: The power supply voltage specifications differ for the voltage output type and current output type.

*11: Current for when 24 VDC is connected, and no load is applied. Please note that the current consumption changes depending on the load connection status.

*12: The gas type switching function enables switching to argon, carbon dioxide and a gas mixture of argon 80% + carbon dioxide 20%. (Note that the 500 L/min and 1000 L/min models do not have a gas change function.) The full scale flow rate after switching to carbon dioxide is half the flow rate range. The output type can also be selected for analog output.

gas tumor	Flow direction	Measured flow rate range(□/min)							
		005	010	020	100	200	500	101	201
• Air • Nitrogen • Argon • Argon 80% + Carbon dioxide 20%	Uni-direction	15 to 500mL	30 to 1000mL	0.06 to 2.00L	0.30 to 10.00L	0.6 to 20.0L	1.5 to 50.0L	3.0 to 100.0L	6 to 200L
	Bi-direction	-500 to -15mL	-1000 to -30mL	-2.00 to -0.06L	-10.00 to -0.30L	-20.0 to -0.6L	-50.0 to -1.5L	-100.0 to -3.0L	-200 to -6L
		15 to 500mL	30 to 1000mL	0.06 to 2.00L	0.30 to 10.00L	0.6 to 20.0L	1.5 to 50.0L	3.0 to 100.0L	6 to 200L
• Carbon dioxide	Uni-direction	15 to 250mL	30 to 500mL	0.06 to 1.00L	0.30 to 5.00L	0.6 to 10.0L	1.5 to 25.0L	3.0 to 50.0L	6 to 100L
	Bi-direction	-250 to -15mL	-500 to -30mL	-1.00 to 0.06L	-5.00 to 0.30L	-10.0 to -0.6L	-25.0 to -1.5L	-50.0 to -3.0L	-100 to -6L
		15 to 250mL	30 to 500mL	0.06 to 1.00L	0.30 to 5.00L	0.6 to 10.0L	1.5 to 25.0L	3.0 to 50.0L	6 to 100L

GAS	Flow direction	Analog output			
		Output A		Output B	
		Voltage	Current	Voltage	Current
• Carbon dioxide	Uni-direction	1 to 3 V	4 to 12mA	1 to 5 V	4 to 20mA
	Bi-direction	2 to 4 V	8 to 16mA	1 to 5 V	4 to 20mA

The "Setting copy function" setting is selected in "Ⓖ Output specifications".

Note that the "External input" function is not available on models on which the "Setting copy function" is enabled.

*13: This product's protection circuit is effective only for specific misconnections and load short-circuits. It does not provide protection for all misconnections.

*14: This product measures changes in heat distribution that are caused by flow. If installed vertically, the heat distribution may change due to the effect of convection, and the zero point may be shifted.

*15: Accuracy may be affected by the piping conditions. For more accurate measurements, use a straight pipe with a ten-times greater internal diameter. With the 500 L/min and 1,000 L/min models, use piping with an internal diameter of 9 mm or more. If it is less than 9 mm, accuracy may be negatively affected.

*16: Refer to page 1432 for weight.

How to order

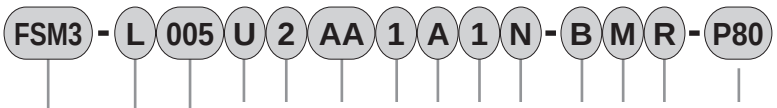

Model No.

Ⓐ Display

Ⓑ Flow rate range (full scale flow rate)

Ⓒ Flow direction

Ⓓ Body material/applicable fluids

Ⓔ Port size

Ⓕ Piping direction

Ⓖ Output specifications

Ⓗ Unit specifications

Ⓘ Valve option

Ⓙ Lead wire

Ⓚ Mounting attachment

Ⓛ Included documents

Ⓜ Clean-room specifications

[Example of model No.]

FSM3-L005U2AA1A1N-BMR-P80

Model: RAPIFLOW FSM3 Series

Ⓐ Display	L	: Liquid crystal display
Ⓑ Flow rate range	005	: 500 mL/min
Ⓒ Flow direction	U	: Uni-direction
Ⓓ Body material/applicable fluids	2	: SUS/air
Ⓔ Port size	AA	: Rc1/8
Ⓕ Piping direction	1	: Straight
Ⓖ Output specifications	A	: Analog voltage output X1, NPN switch output X1, setting copy function
Ⓗ Unit specifications	1	: SI units only
Ⓘ Valve option	N	: None
Ⓙ Lead wire	B	: 5-conductor 3 m
Ⓚ Mounting attachment	M	: DIN rail mount
Ⓛ Included documents	R	: Company certification
Ⓜ Clean-room specifications	P80	: Oil-prohibited

Precautions for model No. selection

*1: Refer to the correspondence table on the following page when selecting the model.
*2: For "B: Bi-directional" models and models with oxygen as the applicable fluid, the only Ⓘ Valve option is "N: None." Note that "T: with needle valve" cannot be selected.
*3: "3: Oxygen" cannot be selected with 500 L/min and 1000 L/min models.
*4: The G thread connection shape is ISO16030-compliant.
*5: Check with the G thread connection shape and dimensions (page 1400) for selection.(G thread connection shape is JIS B 2351-1 O type-compliant)
*6: Models with the unit switching function are not sold in Japan.
*7: Optional parts are provided with the product. They are not pre-assembled.
*8: The product surface is degreased before packaging, and heat-sealed into an antistatic bag on a clean bench (Class 1000 or higher).
*9: In addition to P70 specifications, wetted section materials are degreased and cleaned.
*10: Not selectable for oxygen (blank only)

Code	Description
Ⓐ Display	
L	Liquid crystal display

Ⓑ Flow rate range (full scale flow rate)

005	500 mL/min	**500**	50 L/min
010	1000 mL/min	**101**	100 L/min
020	2 L/min	**201**	200 L/min
050	5 L/min	**501**	500 L/min
100	10 L/min	**102**	1000 L/min
200	20 L/min		

Ⓒ Flow direction *2

U	Uni-direction
B	Bi-direction

Ⓓ Body material/applicable fluids

	Body material	Applicable fluids
2	SUS	Air (gas switchable)
3	SUS	Oxygen (oil-prohibited specifications) *3

Ⓔ Port size

AA	Rc1/8
BA	Rc1/4
CA	Rc1/2
AF	G1/8 *4
BF	G1/4 *4
CF	G1/2 *4
AB	G1/8 *5
BB	G1/4 *5
CB	G1/2 *5
AC	NPT1/8
BC	NPT1/4
CC	NPT1/2
AD	1/4" double barbed fitting (50 L/min or less)
BD	1/4" double barbed fitting (50 to 200 L/min)
AE	1/4" JXR male fitting (50 L/min or less)
BE	1/4" JXR male fitting (50 to 200 L/min)

Ⓕ Piping direction

1	Straight

Ⓖ Output specifications

	Analog output	Switch output	Setting copy function
A	1 point (Voltage output) 1 to 5 V	1 point (NPN)	Yes
B		2 points (NPN)	–
C		1 point (PNP)	Yes
D		2 points (PNP)	–
E	1 point Current output 4 to 20 mA	1 point (NPN)	Yes
F		2 points (NPN)	–
G		1 point (PNP)	Yes
H		2 points (PNP)	–

Ⓗ Unit specifications

1	SI units only
2	With unit switching function (overseas models only) *6

Ⓘ Valve option *2, *10

N	None
T	With needle valve (only for models 200 L or less)

Ⓙ Lead wire

Blank	None
A	5-conductor 1 m
B	5-conductor 3 m

Ⓚ Mounting attachment *7

Blank	None
H	Bracket 1 (for models 200 L or less)
J	Bracket 2 (for 500 or 1000 L models)
K	Panel mounting (for sensor products of models 200 L or less)
L	Panel mounting (for needle valves of models 200 L or less)
M	DIN rail mounting (for models 200 L or less)

Ⓛ Included documents

Blank	None
R	Company certification
S	Company certification + Traceability certification

Ⓜ Clean-room specifications *10

Blank	None
P70	Anti-dust generation *8
P80	Oil-prohibited *9

Flow rate range and port size

B Flow rate range	E Port size															
	AA	BA	CA	AF	BF	CF	AB	BB	CB	AC	BC	CC	AD	BD	AE	BE
	Rc1/8	Rc1/4	Rc1/2	G1/8	G1/4	G1/2	G1/8	G1/4	G1/2	NPT1/8	NPT1/4	NPT1/2	1/4" Double barbed fitting		1/4" JXR male fitting	
005	●○			●○			●○			●○			●○		●○	
010	●○			●○			●○			●○			●○		●○	
020	●○			●○			●○			●○			●○		●○	
050	●○			●○			●○			●○			●○		●○	
100	●○			●○			●○			●○			●○		●○	
200	●○			●○			●○			●○			●○		●○	
500	●○	●○		●○	●○		●○	●○		●○	●○		●○	●○	●○	●○
101		●○			●○			●○			●○			●○		●○
201		●○			●○			●○			●○			●○		●○
501			●			●			●			●				
102			●			●			●			●				

●: Port size compatibility ○: Needle valve option supported

Dimensions (LCD display) (flow rate range: 500 mL/min to 50 L/min)

Port size:Straight Rc1/8, G1/8, NPT1/8

●FSM3-L[B][C]$\frac{2}{3}$ /AA1/AB1/AC1

(full scale flow rate: 500mL/min, 1, 2, 5, 10, 20, 50L/min)

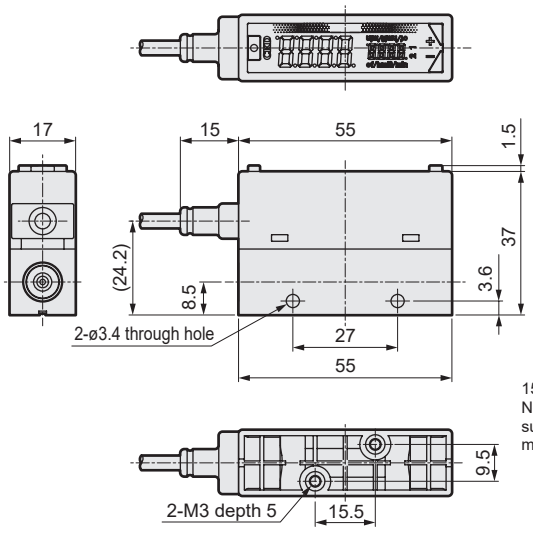

G thread shape (AB)

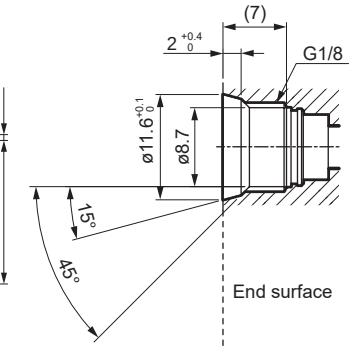

15° of the surface is the seal surface.
Note that it is not the end surface seal. Also, be sure to confirm that the screw depth of the fitting matches before use.

Port size:Straight G1/8

●FSM3-L[B][C]$\frac{2}{3}$ /AF1

(Full scale flow rate:500mL/min, 1,2,5,10,20,50L/min)

Port size: Straight G1/8 (AF1)

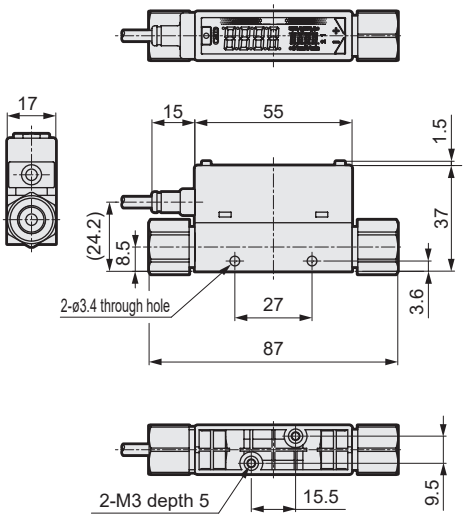

Port size:Straight 1/4" double barbed fitting

●FSM3-L[B][C]$\frac{2}{3}$ /AD1

(full scale flow rate: 500mL/min, 1, 2, 5, 10, 20, 50L/min)

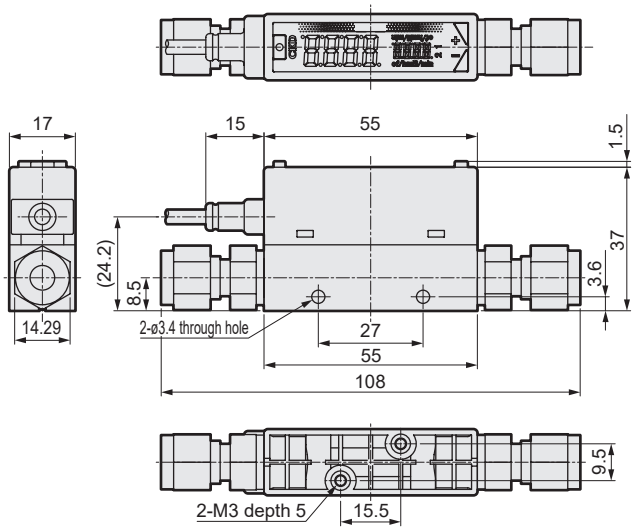

Port size: Straight 1/4" JXR male fitting

●FSM3-L[B][C]$\frac{2}{3}$ /AE1 (full scale flow rate: 500mL/min, 1, 2, 5, 10, 20, 50L/min)

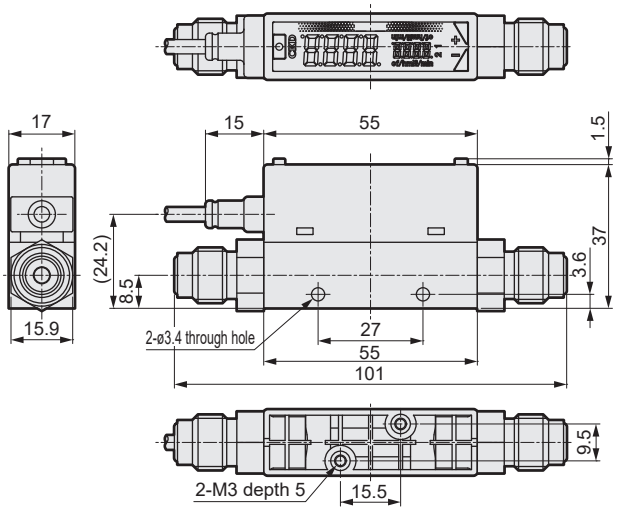

With needle valve dimensions

Port size: Rc1/8, G1/8, NPT1/8, 1/4" double barbed fitting, 1/4" JXR male fitting

●FSM3-L[B][C] /AA1/AF1/AB1/AC1/AD/AE[G][H]T(full scale flow rate: 500mL/min, 1, 2, 5, 10, 20, 50L/min)

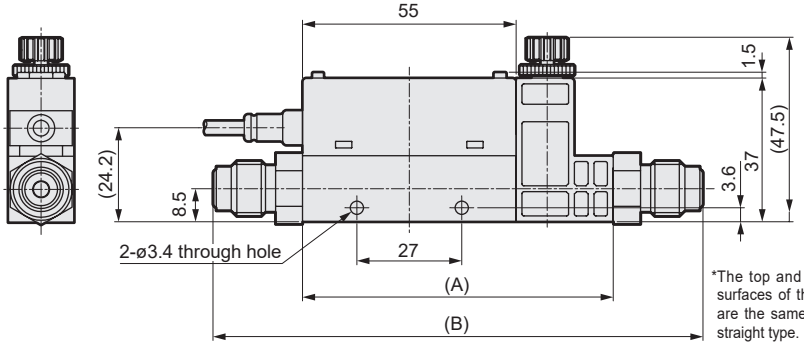

*The top and bottom surfaces of the body are the same as the straight type.

G thread shape (AB*needle valve side)

*Refer to the figure above for the G thread shape (AB) on the sensor side.

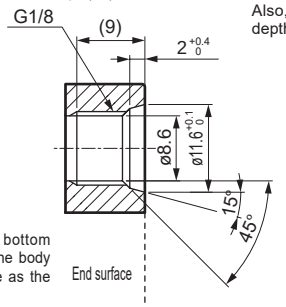

15° of the surface is the seal surface. Note that it is not the end surface seal. Also, be sure to confirm that the screw depth of the fitting matches before use.

Port size	Dimension (A)	Dimension (B)
Rc 1/8	80	-
G 1/8(AF1)	80	112
G 1/8(AB1)	80	-
NPT 1/8	80	-
1/4" Double barbed fitting	80	133
1/4" JXR male fitting	80	126

Dimensions (LCD display) (flow rate range: 50 L/min to 200 L/min)

Port size: Straight Rc1/4, G1/4, NPT1/4

●FSM3-L[B][C]$^{2}_{8}$ /BA1/BB1/BC1

(full scale flow rate: 50,100,200L/min)

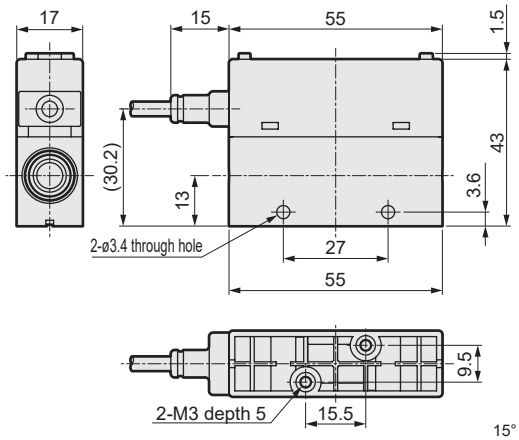

G thread shape (BB)

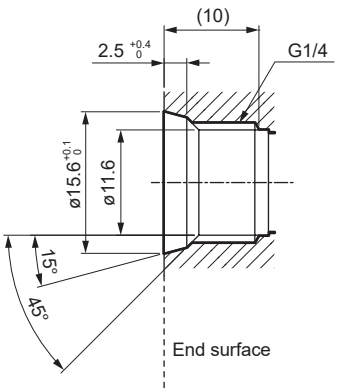

15° of the surface is the seal surface.
Note that it is not the end surface seal. Also, be sure to confirm that the screw depth of the fitting matches before use.

Port size: Straight G1/4 (BF1)

●FSM3-L[B][C]$^{2}_{3}$ /BF1

(full scale flow rate: 50,100,200L/min)

Port size: Straight G1/4 (BF1)

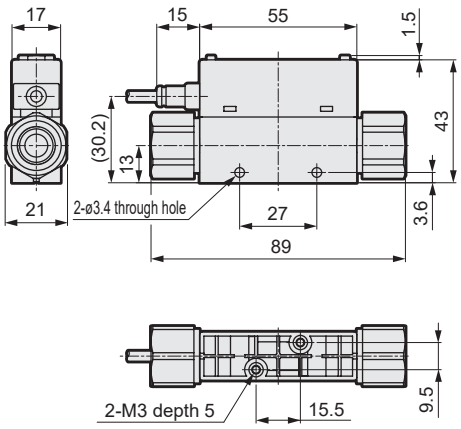

Port size:Straight 1/4" double barbed fitting

●FSM3-L[B][C]$^{2}_{3}$ /BD1

(full scale flow rate: 50,100,200L/min)

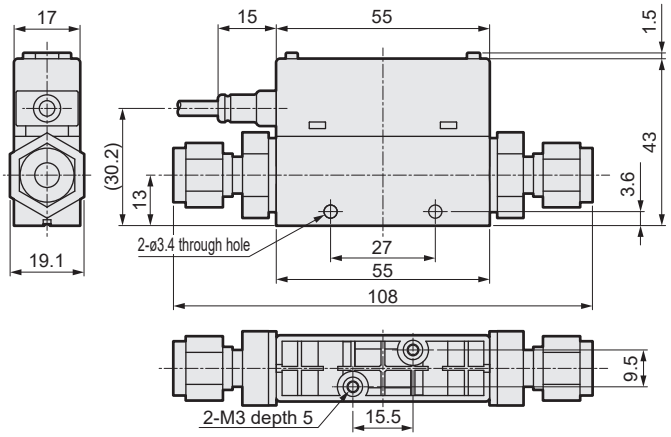

Port size:Straight 1/4" JXR male fitting

●FSM3-L[B][C]$^{2}_{3}$ /BE1

(full scale flow rate: 50,100,200L/min)

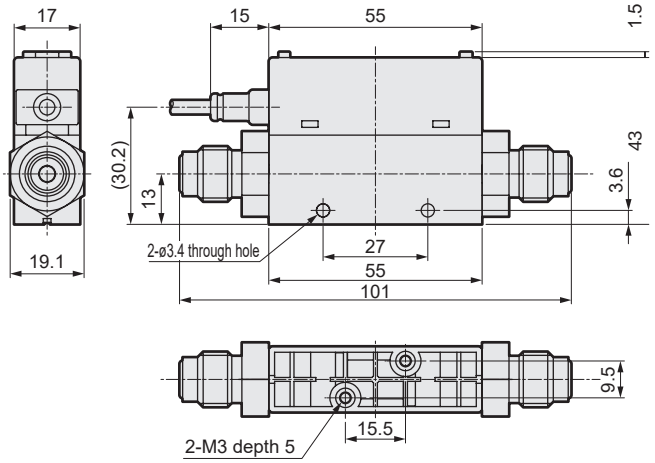

With needle valve dimensions

Port size: Rc1/4, G1/4, NPT1/4, 1/4" double barbed fitting, 1/4" JXR male fitting

●FSM3-L[B][C]$^{2}_{8}$ /BA1/BF1/BB1/BC1/BD/BE[G][H]T(full scale flow rate: 50,100,200L/min)

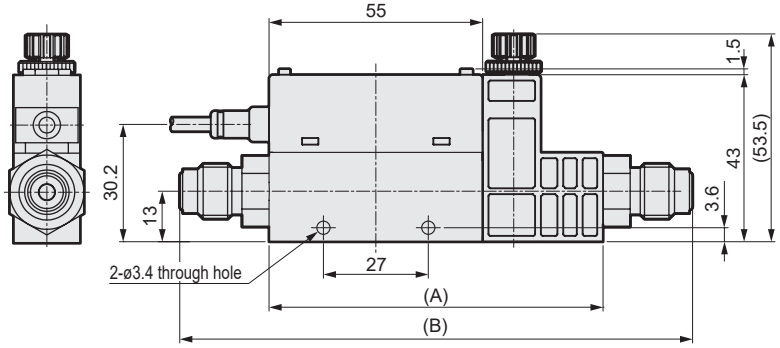

G thread shape (BB* needle valve side)

*Refer to the figure above for the G thread shape (BB) on the sensor side.

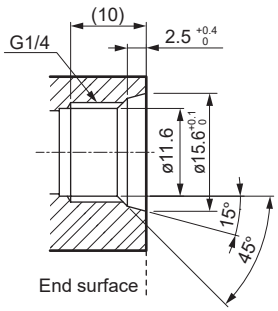

15° of the surface is the seal surface.
Note that it is not the end surface seal. Also, be sure to confirm that the screw depth of the fitting matches before use.

Port size	Dimension (A)	Dimension (B)
Rc 1/4	86	-
G 1/4(BF1)	86	120
G 1/4(BB1)	86	-
NPT 1/4	86	-
1/4" Double barbed fitting	86	139
1/4" JXR male fitting	86	132

*The top and bottom surfaces of the body are the same as the straight type.

Dimensions (LCD display) (flow rate range: 500 L/min to 1000 L/min)

Port size: Straight Rc1/2, G1/2, NPT1/2

● FSM3-LBC2/CA1/CF1/CB1/CC1

(full scale flow rate: 500,1000 L/min)

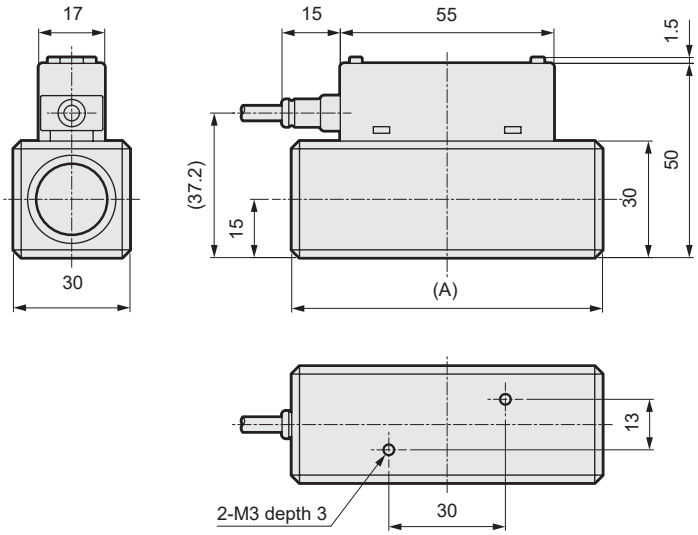

G thread shape (CB)

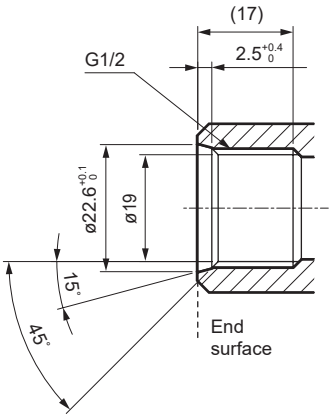

15° of the surface is the seal surface.
Note that it is not the end surface seal. Also, be sure to confirm that the screw depth of the fitting matches before use.

Model No.	Port size	Dimension (A)
FSM3-L□□2CA1	Rc1/2	(80)
FSM3-L□□2CF1	G1/2	(80)
FSM3-L□□2CB1	G1/2	(95.4)
FSM3-L□□2CC1	NPT1/2	(80)

MEMO

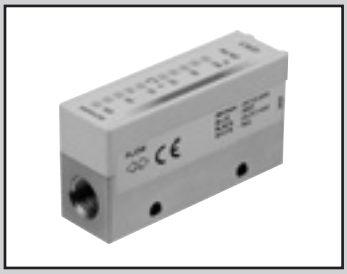

Compact flow rate sensor RAPIFLOW

FSM3 Series

Bar display

● Stainless steel body (flow rate range: 500 mL/min to 1000 L/min)

CE RoHS

Bar display specifications

1 MPa ≈ 145.0 psi, 1 MPa = 10 bar

Item			FSM3-[A][B][C][D][E][F][G][H][I]-[ ]										
			[B]										
			005	010	020	050	100	200	500	101	201	501	102
Flow direction	[C]	U	Uni-direction										
		B	Bi-direction										
Measured flow rate range (□/min) *1	[B]	U	15 to 500 mL	30 to 1000 mL	0.06 to 2.00 L	0.15 to 5.00 L	0.30 to 10.00 L	0.6 to 20.0 L	1.5 to 50.0 L	3.0 to 100.0 L	6 to 200 L	15 to 500 L	30 to 1000 L
		B	-500 to -15, 15 to 500 mL	-1000 to -30, 30 to 1000 mL	-2.00 to -0.06, 0.06 to 2.00 L	-5.00 to -0.15, 0.15 to 5.00 L	-10.00 to -0.30, 0.30 to 10.00 L	-20.0 to -0.6, 0.6 to 20.0 L	-50.0 to -1.5, 1.5 to 50.0 L	-100.0 to -3.0, 3.0 to 100.0 L	-200 to -6, 6 to 200 L	-500 to -15, 15 to 500 L	-1000 to -30, 30 to 1000 L
Display			LED bar display										
Working conditions		Applicable fluids *2	Clean air (JIS B 8392-1:2012 1.1.1 to 5.6.2), compressed air (JIS B 8392-1:2012 1.1.1 to 1.6.2), nitrogen gas										
			Oxygen (When oxygen specifications are selected, the clean-room specifications of Ⓜ cannot be selected.) Specifications automatically become oil-prohibited specifications.)									–	
		Temperature range	0 (32°F) to 50°C (122°F) (no condensation)										
		Pressure range	-0.09 (≈-13 psi, 0 bar) to 1.00 MPa (≈145 psi, 10 bar)									-0.09 (≈-13 psi, 0 bar) to 0.75 MPa (≈108 psi, 7 bar)	
		Proof pressure	1.5 MPa (≈217 psi, 15 bar)										
Operating ambient temperature/humidity			0 (32°F) to 50°C (122°F), 90% RH or less										
Storage temperature			-10 (14°F) to 60°C (140°F)										
Accuracy		Accuracy *3	Within ±3% F.S. (Secondary side released to atmosphere) (The scope of warranty is in accordance with the "measurement flow rate range.")										
		Repeatability *4	Within ±1% F.S. (Secondary side released to atmosphere)										
		Temperature characteristics	Within ±0.2% F.S./°C (15 (59°F) to 35°C (95°F), base temperature 25°C (77°F))										
		Pressure characteristics	Within ±5%F.S. (secondary side released to atmosphere reference)								Within ±5% F.S (0.35 MPa (≈50 psi, 3 bar) reference)		
Response time *5			50 msec or less										
Analog output *6	[G]	J	1 to 5 V voltage output (connecting load impedance 50 kΩ or more)										
		K	4 to 20 mA current output (connecting load impedance 0 to 300 Ω)										
Power supply voltage *7		J	12 to 24 VDC (10.8 to 26.4 V) ripple rate 1% or less										
		K	24 VDC (21.6 to 26.4 V) ripple rate 1% or less										
Current consumption *8			45 mA or less										
Lead wire			ø3.7, AWG26 or equivalent x 4-conductor (connector), insulator O.D. 1.0										
Degree of protection			IP40 or equivalent (IEC standard)										
Protection circuit *9			Power reverse connection protection										
Vibration resistance			10 to 150 Hz, 100 m/s^2, 2 hours each in X, Y, Z directions										
EMC Directive			EN55011, EN61000-6-2, EN61000-4-2/3/4/6/8										
Mounting		Mounting orientation *10	Unrestricted in vertical/horizontal direction										
		Straight piping section *11	Not required										

*1: The value converted to volumetric flow rate at standard conditions (20°C, 1 barometric pressure (101 kPa), 65% RH)
(Conditions for gas types other than air are 20 °C, 1 barometric pressure (101 kPa), relative humidity 0%)

*2: Use dry gas which does not contain corrosive elements such as chlorine, sulfur or acids, and which is clean and does not contain dust or oil mist. When using compressed air, use clean air that complies with JIS B 8392-1:2012 Class 1.1.1 to 1.6.2. Compressed air from the compressor contains drainage (water, oil oxides, foreign matter, etc.). To maintain the function of this product, install a filter, air dryer (min. pressure dew point 10˚C or less), and oil mist filter (max. oil content 0.1 mg/m^3) on the primary side (upstream side) of this product. (Refer to Page 1443 for details on the recommended circuit.)
The sensor for oxygen gas is a custom model. To prevent ignition accidents, do not allow oxygen to flow again when a fluid other than oxygen has flowed even once.

*3: Accuracy is based on a CKD standard flow rate meter. It does not indicate absolute accuracy. Repeatability, temperature characteristics, and pressure characteristics are not included for an accuracy of ± 3% F.S. Consider separately according to the working environment and working conditions.

*4: Repeatability calculated during a short time. Change over time is not included. (Refer to the product specifications for details.)

*5: The actual response time changes depending on the piping conditions.

*6: The output impedance of the analog output section is approx. 1 kΩ. If the impedance of the connecting load is small, output and error increase. Check error with the impedance of the connecting load before using.

*7: The power supply voltage specifications differ for the voltage output type and current output type.

*8: Current for when 24 VDC is connected, and no load is applied. Please note that the current consumption changes depending on the load connection status.

*9: This product's protection circuit is effective only for specific misconnections and load short-circuits. It does not provide protection for all misconnections.

*10: This product measures changes in heat distribution that are caused by flow. If installed vertically, the heat distribution may change due to the effect of convection, and the zero point may be shifted.

*11: Accuracy may be affected by the piping conditions. For more accurate measurements, use a straight pipe with a ten-times greater internal diameter. With the 500 L/min and 1,000 L/min models, use piping with an internal diameter of 9 mm or more. If it is less than 9 mm, accuracy may be negatively affected.

*12: Refer to page 1432 for weight.

How to order

FSM3 - B 005 U 2 AA 1 J 1 N - D H S - P70

Model No. / A Display / B Flow rate range (full scale flow rate) / C Flow direction / D Body material/applicable fluids / E Port size / F Piping direction / G Output specifications / H Unit specifications / I Valve option / J Lead wire / K Mounting attachment / L Included documents / M Clean-room specifications

Code	Description
A Display	
B	Bar display

B Flow rate range (full scale flow rate)

005	500 mL/min	500	50 L/min
010	1000 mL/min	101	100 L/min
020	2 L/min	201	200 L/min
050	5 L/min	501	500 L/min
100	10 L/min	102	1000 L/min
200	20 L/min		

C Flow direction

U	Uni-direction
B	Bi-direction

D Body material/applicable fluids

	Body material	Applicable fluids
2	SUS	Air
3	SUS	Oxygen (oil-prohibited specifications) *3

E Port size

AA	Rc1/8
BA	Rc1/4
CA	Rc1/2
AF	G1/8 *4
BF	G1/4 *4
CF	G1/2 *4
AB	G1/8 *5
BB	G1/4 *5
CB	G1/2 *5
AC	NPT1/8
BC	NPT1/4
CC	NPT1/2
AD	1/4" double barbed fitting (50 L/min or less)
BD	1/4" double barbed fitting (50 to 200 L/min)
AE	1/4" JXR male fitting (50 L/min or less)
BE	1/4" JXR male fitting (50 to 200 L/min)

F Piping direction

1	Straight

G Output specifications *2

J	Analog voltage output x 1 point
K	Analog current output x 1 point

H Unit specifications

1	SI units only

I Valve option

N	None

J Lead wire

Blank	None
C	4-conductor 1 m
D	4-conductor 3 m

K Mounting attachment *6

Blank	None
H	Bracket 1 (for models 200 L or less)
J	Bracket 2 (for 500 or 1000 L models)
M	DIN rail mounting (for models 200 L or less)

L Included documents

Blank	None
R	Company certification
S	Company certification + traceability certificate

M Clean-room specifications *9

Blank	None	
P70	Anti-dust generation	*7
P80	Oil-prohibited	*8

[Example of model No.]

FSM3-B005U2AA1J1N-DHS-P70

Model: RAPIFLOW FSM3 Series

A Display	B	: Bar display
B Flow rate range	005	: 500 mL/min
C Flow direction	U	: Uni-direction
D Body material/applicable fluids	2	: SUS/air
E Port size	AA	: Rc1/8
F Piping direction	1	: Straight
G Output specifications	J	: Analog voltage output x1
H Unit specifications	1	: SI units only
I Valve option	N	: None
J Lead wire	D	: 4-conductor 3 m
K Mounting attachment	H	: Bracket
L Included documents	S	: Company certification + traceability certificate
M Clean-room specifications	P70	: Anti-dust generation

Precautions for model No. selection

*1: Refer to the correspondence table on the following page when selecting the model.
*2: When using in combination with a separated display (FSM2-D), select "J".
*3: "3: Oxygen" cannot be selected with 500 L/min and 1000 L/min models.
*4: The G thread connection shape is ISO16030-compliant.
*5: Check with the G thread connection shape and dimensions (page 1408) for selection. (G thread connection shape is JIS B 2351-1 O type-compliant)
*6: Optional parts are provided with the product. They are not pre-assembled.
*7: The product surface is degreased before packaging, and heat-sealed into an antistatic bag on a clean bench (Class 1000 or higher).
*8: In addition to P70 specifications, wetted section materials are degreased and cleaned.
*9: This cannot be selected on an oxygen type (blank only).

Flow rate range and port size

B Flow rate range	E Port size															
	AA	BA	CA	AF	BF	CF	AB	BB	CB	AC	BC	CC	AD	BD	AE	BE
	Rc1/8	Rc1/4	Rc1/2	G1/8	G1/4	G1/2	G1/8	G1/4	G1/2	NPT1/8	NPT1/4	NPT1/2	1/4" Double barbed fitting		1/4" JXR male fitting	
005	●			●			●			●			●		●	
010	●			●			●			●			●		●	
020	●			●			●			●			●		●	
050	●			●			●			●			●		●	
100	●			●			●			●			●		●	
200	●			●			●			●			●		●	
500	●	●		●	●		●	●		●	●		●	●	●	●
101		●			●			●			●			●		●
201		●			●			●			●			●		●
501			●			●			●			●				
102			●			●			●			●				

Dimensions (bar display) (flow rate range: 500 mL/min to 50 L/min)

Port size: Straight Rc1/8, G1/8, NPT1/8

● FSM3-B[B][C]2/3/AA1/AB1/AC1 (full scale flow rate: 500 mL/min, 1, 2, 5, 10, 20, 50 L/min)

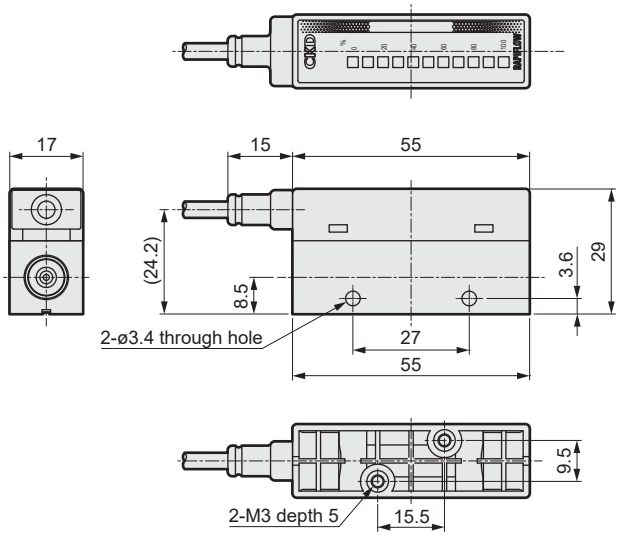

G thread shape (AB)

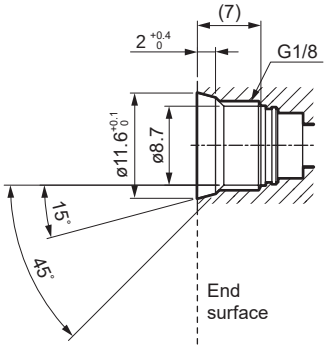

15° of the surface is the seal surface.
Note that it is not the end surface seal. Also, be sure to confirm that the screw depth of the fitting matches before use.

Port size: Straight G1/8

● FSM3-B[B][C]2/3/AF1 (full scale flow rate: 500 mL/min, 1, 2, 5, 10, 20, 50 L/min)

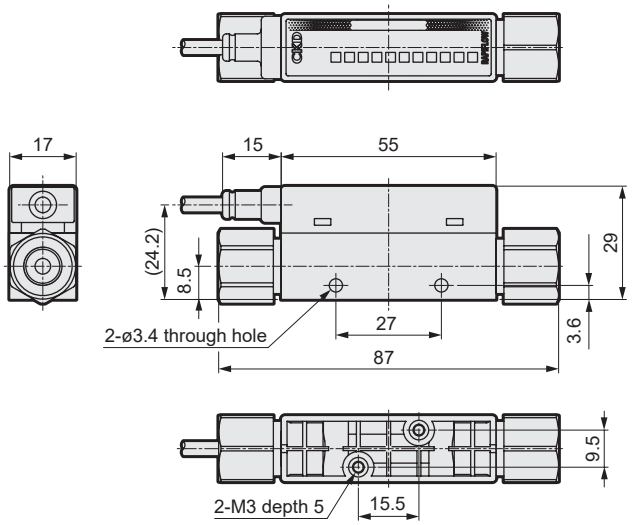

Port size: Straight 1/4" double barbed fitting

● FSM3-B[B][C]2/3/AD1

(full scale flow rate: 500 mL/min, 1, 2, 5, 10, 20, 50 L/min)

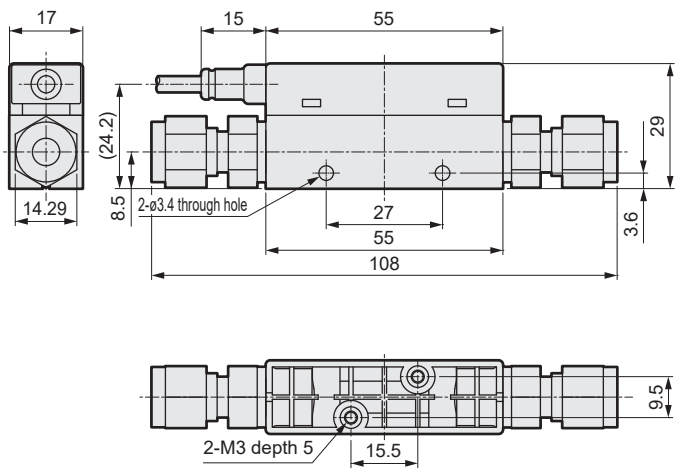

Port size: Straight 1/4" JXR male fitting

● FSM3-B[B][C]2/3/AE1

(full scale flow rate: 500 mL/min, 1, 2, 5, 10, 20, 50 L/min)

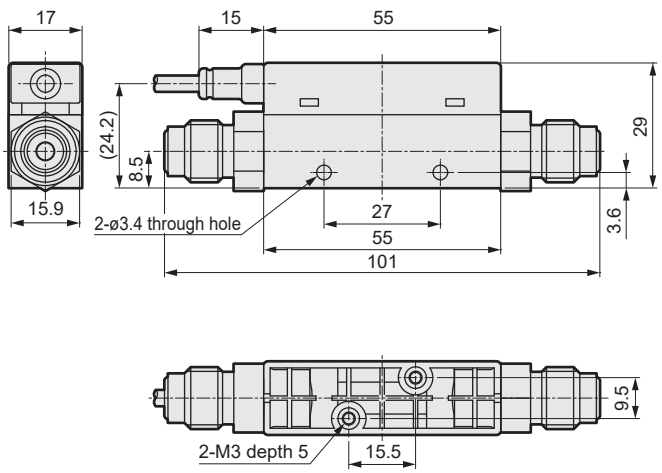

Dimensions (bar display) (flow rate range: 50 L/min to 1000 L/min)

Port size: Straight Rc1/4, G1/4, NPT1/4

●FSM3-B□□$\frac{2}{3}$/BA1/BB1/BC1 (full scale flow rate: 50, 100, 200L/min)

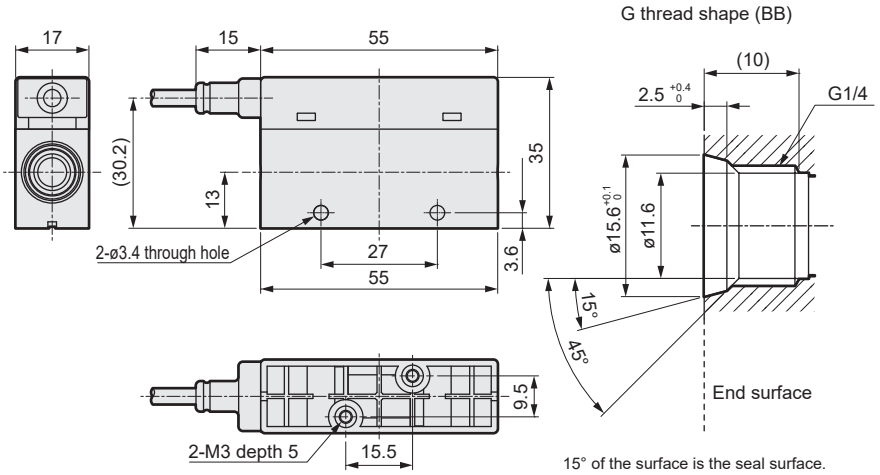

15° of the surface is the seal surface.
Note that it is not the end surface seal. Also, be sure to confirm that the screw depth of the fitting matches before use.

Port size : Straight G1/4

●FSM3-B□□$\frac{2}{3}$/BF1 (full scale flow rate: 50,100,200L/min)

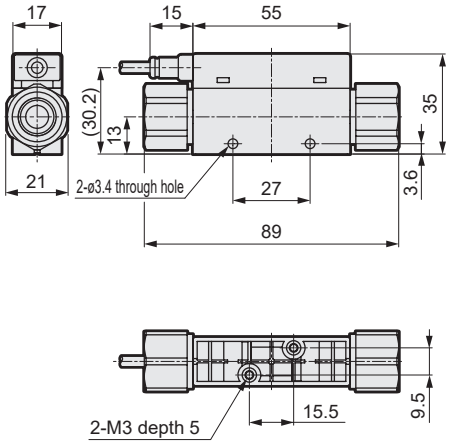

Port size: Straight 1/4" double barbed fitting

●FSM3-B□□$\frac{2}{3}$/BD1 (full scale flow rate: 50,100,200L/min)

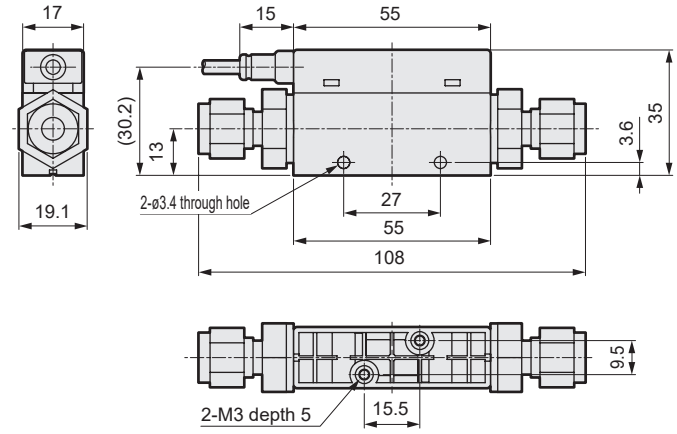

Port size: Straight 1/4" JXR male fitting

●FSM3-B□□$\frac{2}{3}$/BE1 (full scale flow rate: 50,100,200L/min)

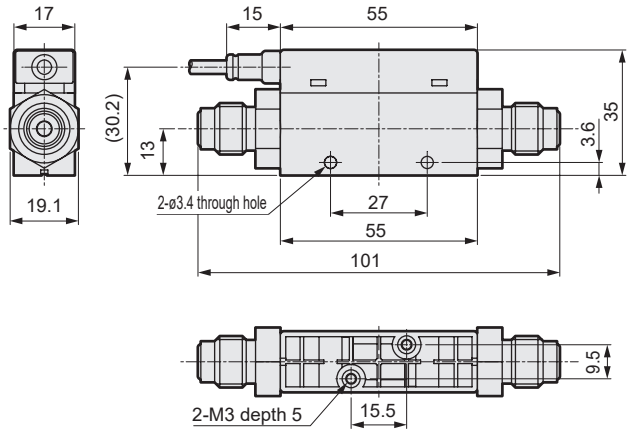

Port size: Straight Rc1/2, G1/2, NPT1/2

●FSM3-B□□2/CA1/CF1/CB1/CC1 (full scale flow rate: 500,1000L/min)

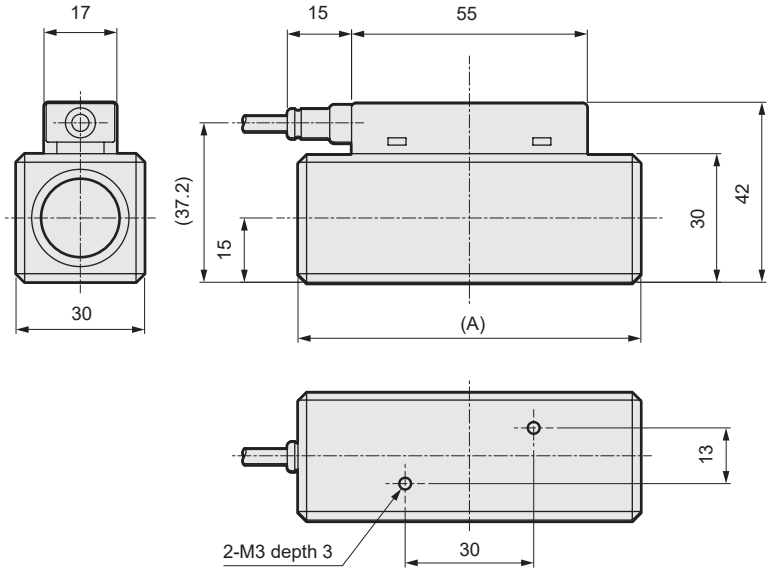

G thread shape (CB)

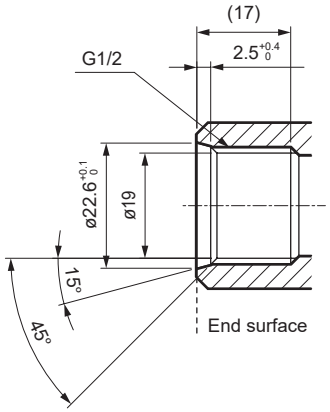

15° of the surface is the seal surface.
Note that it is not the end surface seal. Also, be sure to confirm that the screw depth of the fitting matches before use.

Model No.	Port size	Dimension (A)
FSM3-B□□2CA1	Rc1/2	(80)
FSM3-B□□2CF1	G1/2	(80)
FSM3-B□□2CB1	G1/2	(95.4)
FSM3-B□□2CC1	NPT1/2	(80)



Compact flow rate sensor RAPIFLOW

FSM3 Series

IO-Link

● Stainless steel body (flow rate range: 500 mL/min to 1000 L/min)

CE RoHS

IO-Link specifications

Item			FSM3-[A][B][C][D][E][F][G][H][I]-[ ]										
			[B]										
			005	010	020	050	100	200	500	101	201	501	102
Flow direction	[C]	U	Uni-direction										
		B	Bi-direction										
Measured flow rate range (□/min) *1	[B]	U	15 to 500 mL	30 to 1000 mL	0.06 to 2.00 L	0.15 to 5.00 L	0.30 to 10.00 L	0.6 to 20.0 L	1.5 to 50.0 L	3.0 to 100.0 L	6 to 200 L	15 to 500 L	30 to 1000 L
		B	-500 to -15, 15 to 500 mL	-1000 to -30, 30 to 1000 mL	-2.00 to -0.06, 0.06 to 2.00 L	-5.00 to -0.15, 0.15 to 5.00 L	-10.00 to -0.30, 0.30 to 10.00 L	-20.0 to -0.6, 0.6 to 20.0 L	-50.0 to -1.5, 1.5 to 50.0 L	-100.0 to -3.0, 3.0 to 100.0 L	-200 to -6, 6 to 200 L	-500 to -15, 15 to 500 L	-1000 to -30, 30 to 1000 L
Display			LED display (power and status indicators)										
Working conditions		Applicable fluids *2	Clean air (JIS B 8392-1:2012 1.1.1 to 5.6.2), compressed air (JIS B 8392-1:2012 1.1.1 to 1.6.2), nitrogen gas										
			Argon, carbon dioxide, and gas mixture (argon + carbon dioxide)									–	
			Oxygen (When oxygen specifications are selected, the clean-room specifications of Ⓜ cannot be selected.) Specifications automatically become oil-prohibited specifications.)									–	
		Temperature range	0 (32°F) to 50°C (122°F) (no condensation)										
		Pressure range	-0.09 (≈-13 psi, 0 bar) to 1.00 MPa (≈145 psi, 10 bar)									-0.09 (≈-13 psi, 0 bar) to 0.75 MPa (≈108 psi, 7 bar)	
		Proof pressure	1.5 MPa (≈217 psi, 15 bar)										
Operating ambient temperature/humidity			0 (32°F) to 50°C (122°F), 90% RH or less										
Storage temperature			-10 (14°F) to 60°C (140°F)										
Accuracy *3		Accuracy *4	Within ±3% F.S. (Secondary side released to atmosphere) (The scope of warranty is in accordance with the "measurement flow rate range.")										
		Repeatability *5	Within ±1% F.S. (Secondary side released to atmosphere)										
		Temperature characteristics	Within ±0.2% F.S./°C (15 (59°F) to 35°C (95°F), base temperature 25°C (77°F))										
		Pressure characteristics	Within ±5%F.S. (secondary side released to atmosphere reference)								Within ±5% F.S (0.35 MPa (≈50 psi, 3 bar) reference)		
Response time *6			50 msec or less										
Power supply voltage			18 to 30 VDC (ripple rate 1% or less)										
Current consumption *7			45 mA or less										
Lead wire *8			M12 both-end connector lead wire (3 m), AWG#23 or equivalent, 4-conductor										
Functions *9, *10			(1) Gas type selection, (2) flow rate integration, (3) peak hold, etc.										
Degree of protection			IP40 or equivalent (IEC standard)										
Protection circuit *11			Power reverse connection protection										
Vibration resistance *12			10 to 150 Hz, 100 m/s^2, 2 hours each in X, Y, Z directions										
EMC Directive			EN55011, EN61000-6-2, EN61000-4-2/3/4/6/8										
Mounting	Mounting orientation *13		Unrestricted in vertical/horizontal direction										
	Straight piping section *14		Not required										

*Refer to page 1438 for communication specifications.

*1: The value converted to volumetric flow rate at standard conditions (20°C, 1 barometric pressure (101 kPa), 65%).
(For gases other than air: 20°C, 1 barometric pressure (101 kPa), 0% RH)

*2: Use dry gas which does not contain corrosive elements such as chlorine, sulfur or acids, and which is clean and does not contain dust or oil mist. When using compressed air, use clean air that complies with JIS B 8392-1:2012 Class 1.1.1 to 1.6.2. Compressed air from the compressor contains drainage (water, oil oxides, foreign matter, etc.). To maintain the function of this product, install a filter, air dryer (min. pressure dew point 10˚C or less), and oil mist filter (max. oil content 0.1 mg/m^3) on the primary side (upstream side) of this product. (Refer to Page 1443 for details on the recommended circuit.)
The sensor for oxygen gas is a custom model. To prevent ignition accidents, do not allow oxygen to flow again when a fluid other than oxygen has flowed even once.

*3: Compressed air is used for adjusting and inspecting this product. Accuracy for gas types other than air is a guideline.

*4: Accuracy is based on a CKD standard flow rate meter. It does not indicate absolute accuracy. Repeatability, temperature characteristics, and pressure characteristics are not included for an accuracy of ± 3% F.S. Consider separately according to the working environment and working conditions.

*5: Repeatability calculated during a short time. Change over time is not included. (Refer to the product specifications for details.)

*6: The actual response time changes depending on the piping conditions.

*7: Current for when 24 VDC is connected, and no load is applied. Please note that the current consumption changes depending on the load connection status.

*8: The male end is straight, and the female end is angled. (Page 1440.)
Tighten the M12 connector with a torque of 0.5 N·m or lower. Tightening with excessive force may lead to damage.

*9: The gas type switching function enables switching to argon, carbon dioxide and a gas mixture of argon 80% + carbon dioxide 20%.
The measurement flow rate ranges after switching are as follows. (Note that gas switching is not possible with the oxygen, 500 L/min, and 1000 L/min models.)

Gas	Flow direction	Measurement flow rate range (□/min)							
		005	010	020	100	200	500	101	201
· Air · Nitrogen · Argon · Argon 80% + carbon dioxide 20%	Uni-direction	15 to 500 mL	30 to 1000 mL	0.06 to 2.00 L	0.30 to 10.00 L	0.6 to 20.0 L	1.5 to 50.0 L	3.0 to 100.0 L	6 to 200 L
	Bi-direction	-500 to -15 mL	-1000 to -30 mL	-2.00 to -0.06 L	-10.00 to -0.30 L	-20.0 to -0.6 L	-50.0 to -1.5 L	-100.0 to -3.0 L	-200 to -6 L
		15 to 500 mL	30 to 1000 mL	0.06 to 2.00 L	0.30 to 10.00 L	0.6 to 20.0 L	1.5 to 50.0 L	3.0 to 100.0 L	6 to 200 L
· Carbon dioxide	Uni-direction	15 to 250 mL	30 to 500 mL	0.06 to 1.00 L	0.30 to 5.00 L	0.6 to 10.0 L	1.5 to 25.0 L	3.0 to 50.0 L	6 to 100 L
	Bi-direction	-250 to -15 mL	-500 to -30 mL	-1.00 to -0.06 L	-5.00 to -0.30 L	-10.0 to -0.6 L	-25.0 to -1.5 L	-50.0 to -3.0 L	-100 to -6 L
		15 to 250 mL	30 to 500 mL	0.06 to 1.00 L	0.30 to 5.00 L	0.6 to 10.0 L	1.5 to 25.0 L	3.0 to 50.0 L	6 to 100 L

*10: The accumulated flow is a calculated (reference) value. When using the integrated save function, take care to prevent the number of saves from exceeding the access count limit of the storage device (1 million times). (Changes to the settings are counted in number of accesses.)

$$\text{Number of saves} = \frac{\text{Usage time}}{5 \text{ mins}} < 1 \text{ million times}$$

When the instantaneous flow rate is 1% or less, the flow rate is counted as accumulated flow rate.

*11: This product's protection circuit is effective only for specific misconnections and load short-circuits. It does not provide protection for all misconnections.

*12: A communication error may occur depending on the vibration conditions. Install this product in a place not subject to vibration.

*13: This product measures changes in heat distribution that are caused by flow. If installed vertically, the heat distribution may change due to the effect of convection, and the zero point may be shifted.

*14: Accuracy may be affected by the piping conditions. For more accurate measurements, use a straight pipe with a ten-times greater internal diameter. With the 500 L/min and 1,000 L/min models, use piping with an internal diameter of 9 mm or more. If it is less than 9 mm, accuracy may be negatively affected.

*15: Refer to page 1432 for weight.

How to order

FSM3 - C 005 U 2 AA 1 L 1 N - G H R - P70

- FSM3: Model No.
- C: (A) Display
- 005: (B) Flow rate range (full scale flow rate)
- U: (C) Flow direction
- 2: (D) Body material/applicable fluids
- AA: (E) Port size
- 1: (F) Piping direction
- L: (G) Output specifications
- 1: (H) Unit specifications
- N: (I) Valve option
- G: (J) Lead wire
- H: (K) Mounting attachment
- R: (L) Included documents
- P70: (M) Clean-room specifications

Code	Description
(A) Display	
C	IO-Link

(B) Flow rate range (full scale flow rate)			
005	500 mL/min	**500**	50 L/min
010	1000 mL/min	**101**	100 L/min
020	2 L/min	**201**	200 L/min
050	5 L/min	**501**	500 L/min
100	10 L/min	**102**	1000 L/min
200	20 L/min		

(C) Flow direction	
U	Uni-direction
B	Bi-direction

(D) Body material/applicable fluids		
	Body material	Applicable fluids
2	SUS	Air (gas switchable)
3	SUS	Oxygen (oil-prohibited specifications) *2

(E) Port size	
AA	Rc1/8
BA	Rc1/4
CA	Rc1/2
AF	G1/8 *3
BF	G1/4 *3
CF	G1/2 *3
AB	G1/8 *4
BB	G1/4 *4
CB	G1/2 *4
AC	NPT1/8
BC	NPT1/4
CC	NPT1/2
AD	1/4" double barbed fitting (50 L/min or less)
BD	1/4" double barbed fitting (50 to 200 L/min)
AE	1/4" JXR male fitting (50 L/min or less)
BE	1/4" JXR male fitting (50 to 200 L/min)

(F) Piping direction	
1	Straight

(G) Output specifications	
L	IO-Link communication

(H) Unit specifications	
1	SI units only

(I) Valve option	
N	None

(J) Lead wire	
Blank	None
G	M12 both-end lead wire with connector (3 m)

(K) Mounting attachment *5	
Blank	None
H	Bracket 1 (for models 200 L or less)
J	Bracket 2 (for 500 or 1000 L models)
M	DIN rail mounting (for models 200 L or less)

(L) Included documents	
Blank	None
R	Company certification
S	Company certification + traceability certificate

(M) Clean-room specifications *8		
Blank	None	
P70	Anti-dust generation	*6
P80	Oil-prohibited	*7

[Example of model No.]

FSM3-C005U2AA1L1N-GHR-P70

Model: RAPIFLOW FSM3 Series

(A) Display	C	: IO-Link
(B) Flow rate range	005	: 500 mL/min
(C) Flow direction	U	: Uni-direction
(D) Body material/applicable fluids	2	: SUS/air
(E) Port size	AA	: Rc1/8
(F) Piping direction	1	: Straight
(G) Output specifications	L	: IO-Link
(H) Unit specifications	1	: SI units only
(I) Valve option	N	: None
(J) Lead wire	G	: M12 both-end lead wire with connector (3 m)
(K) Mounting attachment	H	: Bracket
(L) Included documents	R	: Company certification
(M) Clean-room specifications	P70	: Anti-dust generation

Precautions for model No. selection

*1: Refer to the correspondence table on the following page when selecting the model.
*2: "3: Oxygen" cannot be selected for 500 L/min or 1000 L/min.
*3: The G thread connection shape is ISO16030-compliant.
*4: Check with the G thread connection shape and dimensions (page 1414) for selection. (G thread connection shape is JIS B 2351-1 O type-compliant)
*5: Optional parts are included with the product. They are not pre-assembled.
*6: The product surface is degreased and cleaned before packaging, and heat-sealed into an antistatic bag on a clean bench (Class 1000 or more).
*7: In addition to P70 specifications, wetted section materials are degreased and cleaned.
*8: This cannot be selected on an oxygen type (blank only).

Flow rate range and port size

B Flow rate range	E Port size															
	AA	BA	CA	AF	BF	CF	AB	BB	CB	AC	BC	CC	AD	BD	AE	BE
	Rc1/8	Rc1/4	Rc1/2	G1/8	G1/4	G1/2	G1/8	G1/4	G1/2	NPT1/8	NPT1/4	NPT1/2	1/4" Double barbed fitting		1/4" JXR male fitting	
005	●			●			●			●			●		●	
010	●			●			●			●			●		●	
020	●			●			●			●			●		●	
050	●			●			●			●			●		●	
100	●			●			●			●			●		●	
200	●			●			●			●			●		●	
500	●	●		●	●		●	●		●	●		●	●	●	●
101		●			●			●			●			●		●
201		●			●			●			●			●		●
501			●			●			●			●				
102			●			●			●			●				

Dimensions (IO-Link) (flow rate range: 500 mL/min to 50 L/min)

Port size: Straight Rc1/8, G1/8, NPT1/8

● FSM3-C[B][C]2/3/AA1/AB1/AC1 (full scale flow rate: 500 mL/min, 1, 2, 5, 10, 20, 50 L/min)

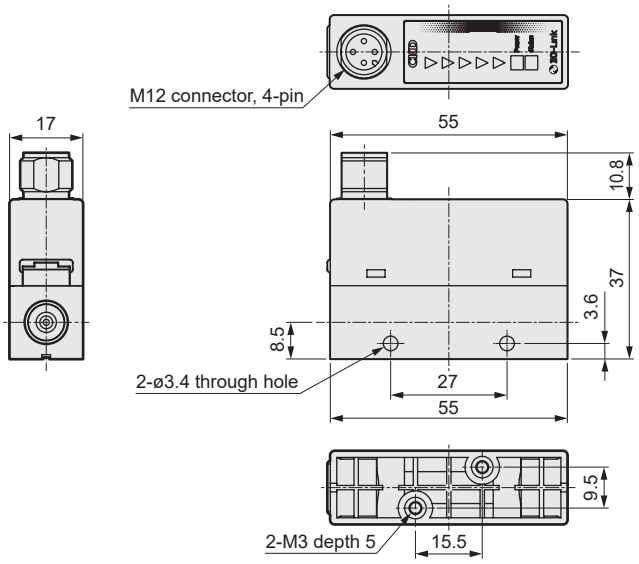

G thread shape (AB)

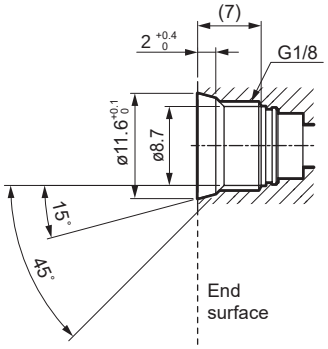

15° of the surface is the seal surface.
Note that it is not the end surface seal. Also, be sure to confirm that the screw depth of the fitting matches before use.

Port size: Straight G1/8

● FSM3-C[B][C]2/3/AF1 (full scale flow rate: 500 mL/min, 1, 2, 5, 10, 20, 50 L/min)

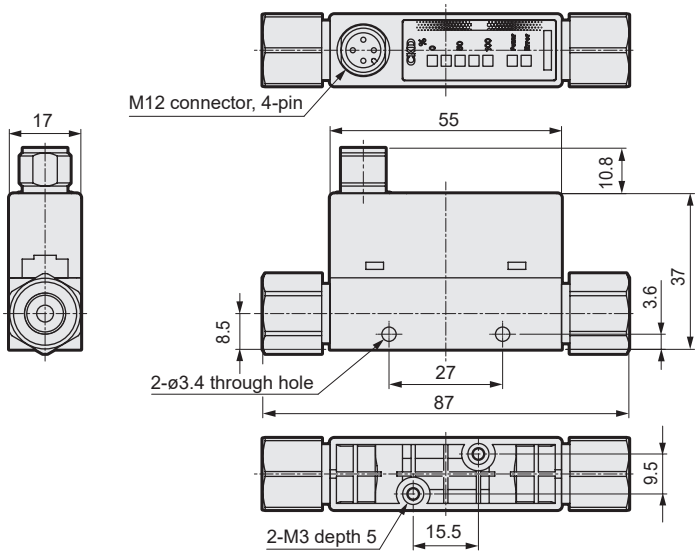

Port size: Straight 1/4" double barbed fitting

● FSM3-C[B][C]2/3/AD1

(full scale flow rate: 500 mL/min, 1, 2, 5, 10, 20, 50 L/min)

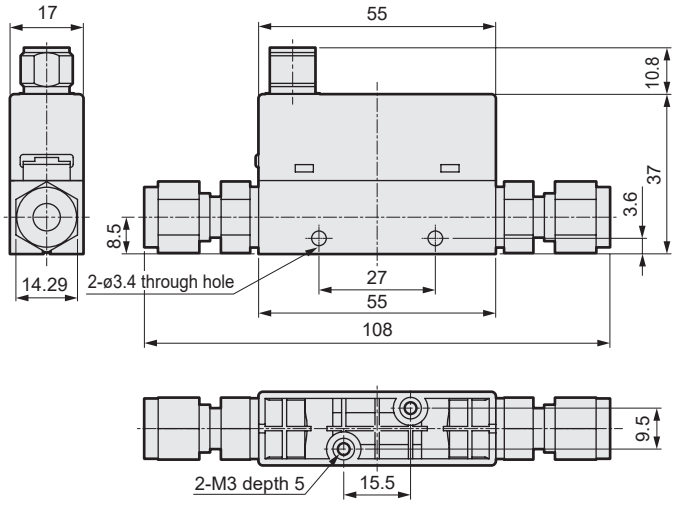

Port size: Straight 1/4" JXR male fitting

● FSM3-C[B][C]2/3/AE1

(full scale flow rate: 500 mL/min, 1, 2, 5, 10, 20, 50 L/min)

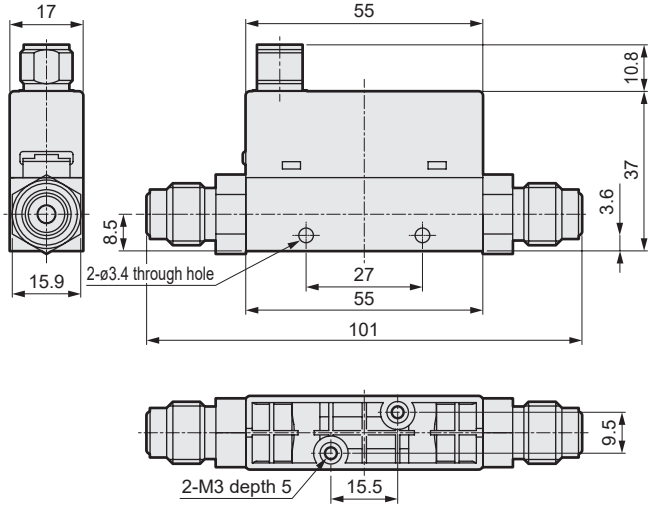

Dimensions (IO-Link) (flow rate range: 50 L/min to 1000 L/min)

Port size: Straight Rc1/4, G1/4, NPT1/4

●FSM3-C[B][C]$\frac{2}{3}$/BA1/BB1/BC1 (full scale flow rate: 50, 100, 200L/min)

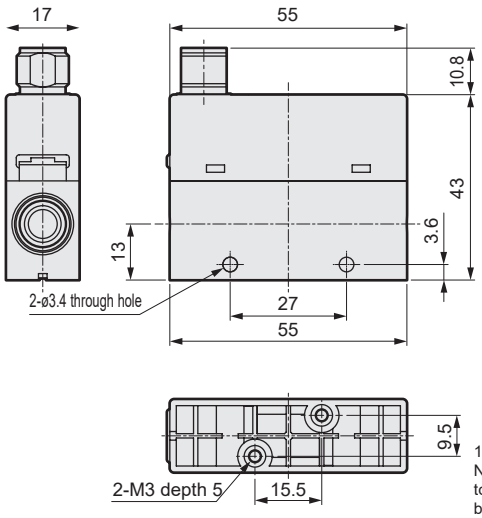

G thread shape (BB)

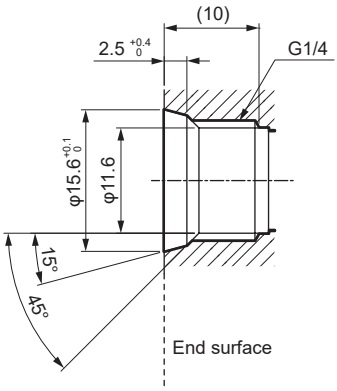

15° of the surface is the seal surface.
Note that it is not the end surface seal. Also, be sure to confirm that the screw depth of the fitting matches before use.

Port size: Straight G1/4

●FSM3-C[B][C]$\frac{2}{3}$/BF1

(full scale flow rate: 50,100,200L/min)

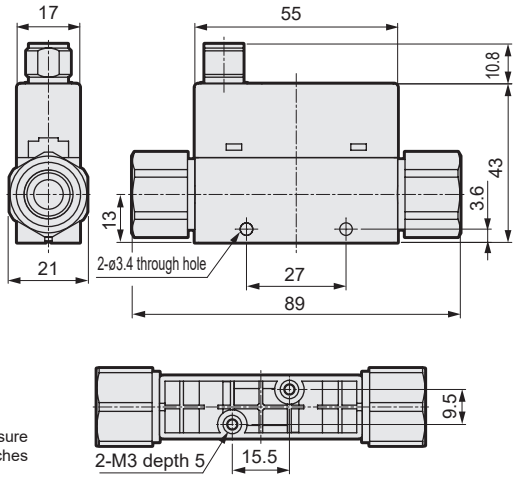

Port size: Straight 1/4" double barbed fitting

●FSM3-C[B][C]$\frac{2}{3}$/BD1 (full scale flow rate: 50, 100, 200L/min)

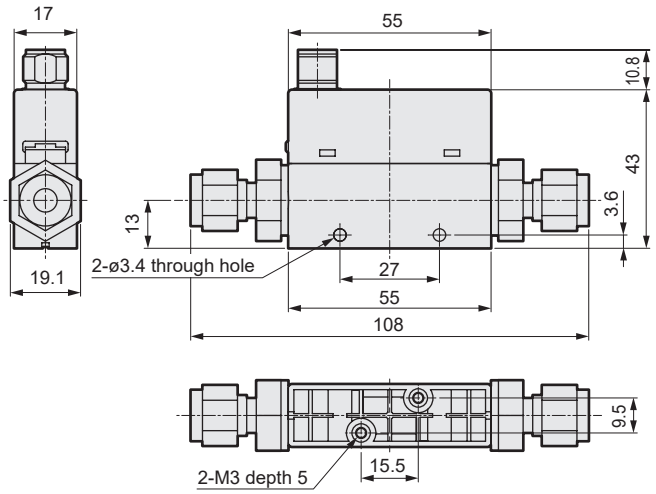

Port size: Straight 1/4" JXR male fitting

●FSM3-C[B][C]$\frac{2}{3}$/BE1 (full scale flow rate: 50, 100, 200L/min)

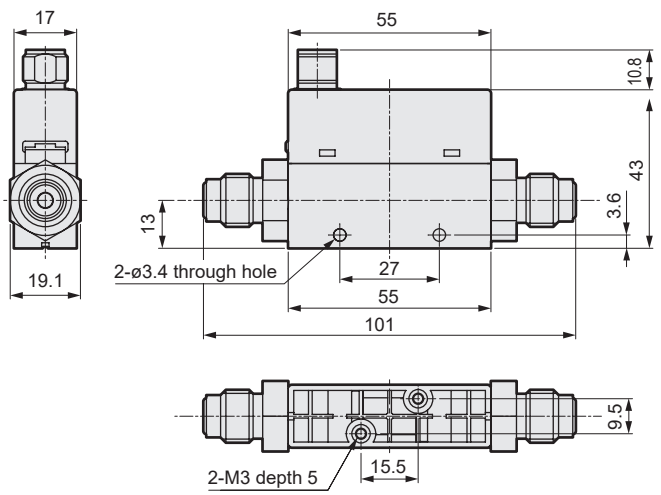

Port size: Straight Rc1/2, G1/2, NPT1/2

●FSM3-C[B][C]2/CA1/CF1/CB1/CC1 (full scale flow rate: 500,1000L/min)

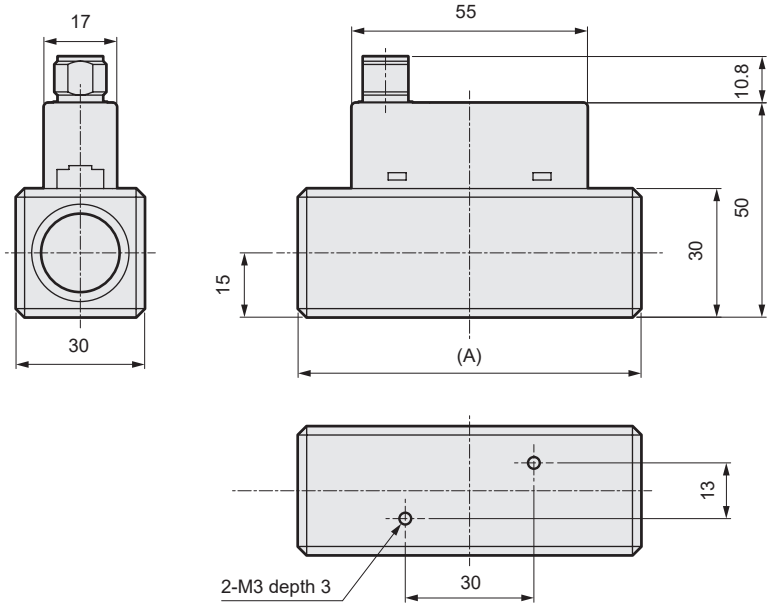

G thread shape (CB)

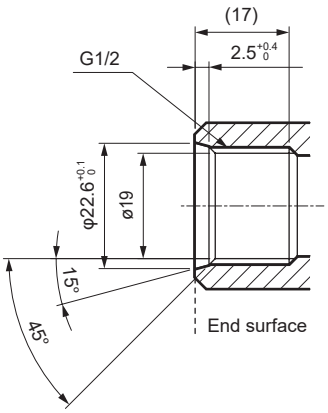

15° of the surface is the seal surface.
Note that it is not the end surface seal. Also, be sure to confirm that the screw depth of the fitting matches before use.

Model No.	Port size	Dimension (A)
FSM3-C□□2CA1	Rc1/2	(80)
FSM3-C□□2CF1	G1/2	(80)
FSM3-C□□2CB1	G1/2	(95.4)
FSM3-C□□2CC1	NPT1/2	(80)

Internal structure

● FSM3-B005 to 500

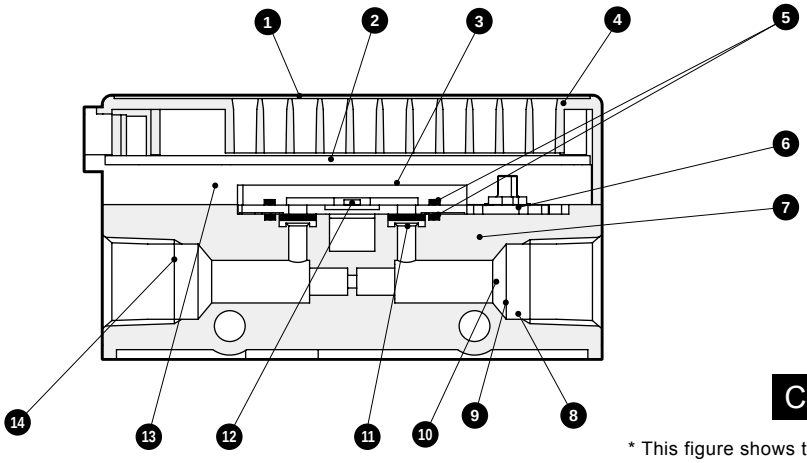

Cannot be disassembled

* This figure shows the bar display.
* The part materials are subject to change without notice.

No.	Part name		Material	No.	Part name		Material
1	Front sheet		PET film	8	O-ring	(*)	Fluoro rubber
2	Electronic circuit board		Glass epoxy resin	9	Spacer	(*)	Stainless steel
3	Sensor cover	(*)	Stainless steel	10	Filter	(*)	Stainless steel
4	Case		Polyamide resin	11	Filter	(*)	Stainless steel
5	Gasket	(*)	Fluoro rubber	12	Sensor chip	(*)	Semiconductor silicon
6	Sensor board	(*)	Alumina	13	Circuit board holder		Polyamide resin
7	Sensor body	(*)	Stainless steel	14	C-snap ring	(*)	Stainless steel

(*): Cleaning parts for P80 specifications.

● FSM3-L500 to 201

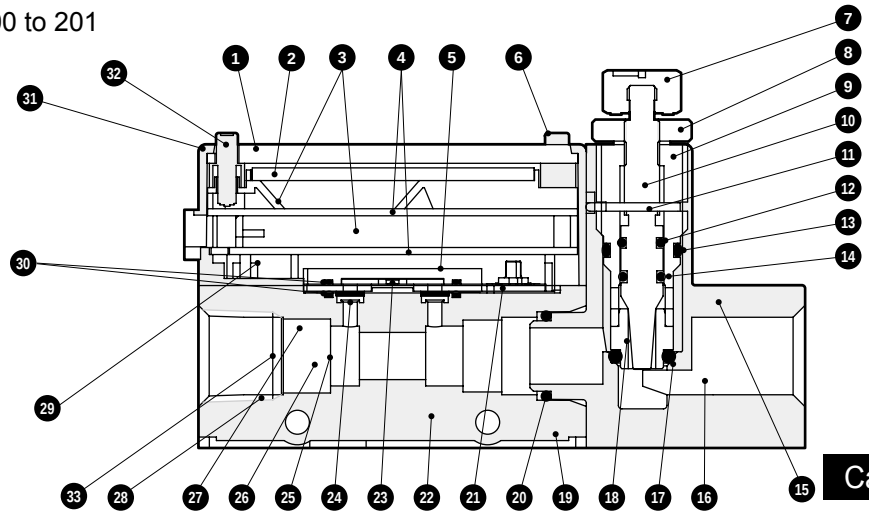

Cannot be disassembled

* This figure shows the LCD display with needle valve.
* The part materials are subject to change without notice.

No.	Part name		Material	No.	Part name		Material
1	Liquid crystal cover		Acrylic resin	18	Orifice	(*)	Tetra fluoro resin
2	Liquid crystal		-	19	Fitting fixing pin		Stainless steel
3	Base spacer		Polycarbonate resin	20	O-ring	(*)	Fluoro rubber
4	Electronic circuit board		Glass epoxy resin	21	Sensor board	(*)	Alumina
5	Sensor cover	(*)	Stainless steel	22	Sensor body	(*)	Stainless steel
6	Switch		Ethylene/propylene rubber	23	Sensor chip	(*)	Semiconductor silicon
7	Knob		Polybutylene terephthalate	24	Filter	(*)	Stainless steel
8	Lock nut		Copper alloy/nickeling	25	Filter	(*)	Stainless steel
9	Needle guide	(*)	Stainless steel	26	Spacer	(*)	Stainless steel
10	Needle	(*)	Stainless steel	27	O-ring	(*)	Fluoro rubber
11	Fixing pin		Stainless steel	28	O-ring	(*)	Fluoro rubber
12	O-ring	(*)	Fluoro rubber	29	Circuit board holder		Polyamide resin
13	O-ring	(*)	Fluoro rubber	30	Gasket	(*)	Fluoro rubber
14	O-ring	(*)	Fluoro rubber	31	Case		Polyamide resin
15	Needle valve body	(*)	Stainless steel	32	Switch		Ethylene/propylene rubber
16	Filter	(*)	Stainless steel	33	C-snap ring	(*)	Stainless steel
17	O-ring	(*)	Fluoro rubber				

(*): Cleaning parts for P80 specifications.

Internal structure

● FSM3-C005 to 500

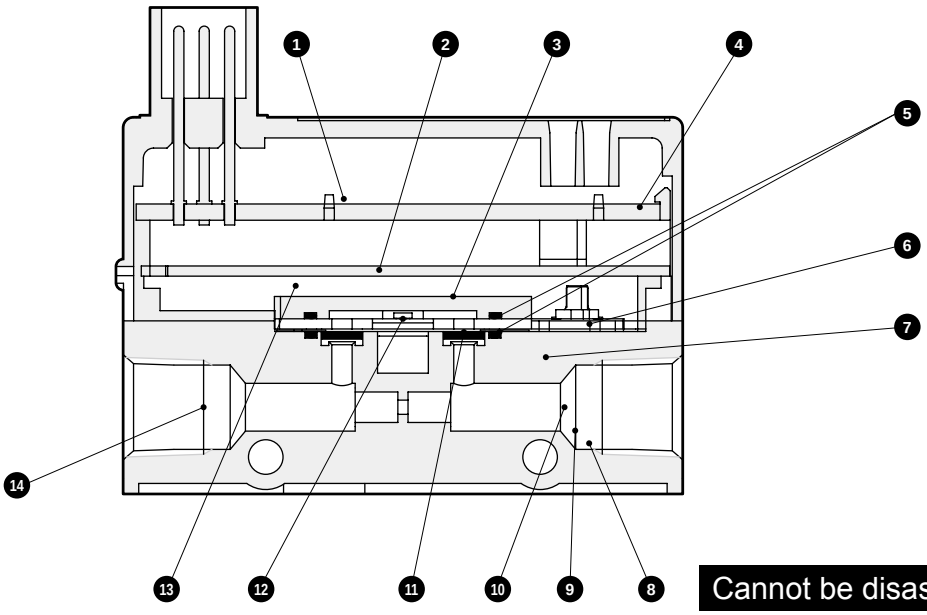

Cannot be disassembled

* This figure shows the IO-Link display.
* The part materials are subject to change without notice.

No.	Part name		Material	No.	Part name		Material
1	Front sheet		PET film	8	O-ring	(*)	Fluoro rubber
2	Electronic circuit board		Glass epoxy resin	9	Spacer	(*)	Stainless steel
3	Sensor cover	(*)	Stainless steel	10	Filter	(*)	Stainless steel
4	Case		Polyamide resin	11	Filter	(*)	Stainless steel
5	Gasket	(*)	Fluoro rubber	12	Sensor chip	(*)	Semiconductor silicon
6	Sensor board	(*)	Alumina	13	Circuit board holder		Polyamide resin
7	Sensor body	(*)	Stainless steel	14	C-snap ring	(*)	Stainless steel

(*): Cleaning parts for P80 specifications.

● FSM3-L501, 102

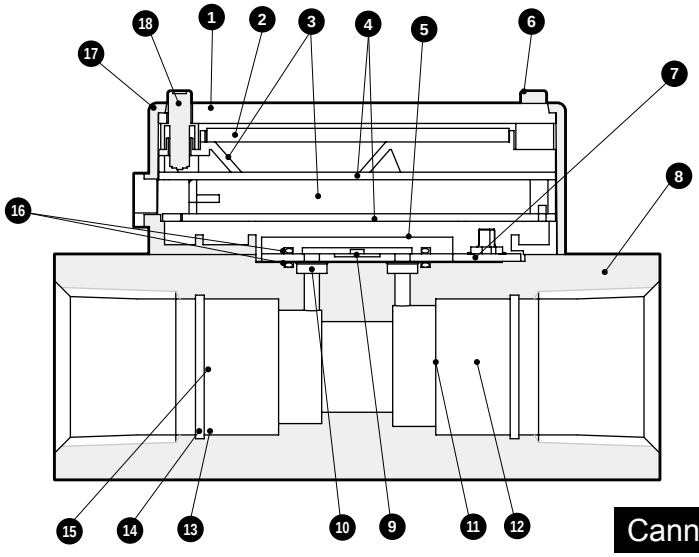

Cannot be disassembled

* This figure shows the LCD display.
* The part materials are subject to change without notice.

No.	Part name		Material	No.	Part name		Material
1	Liquid crystal cover		Acrylic resin	10	Filter	(*)	Stainless steel
2	Liquid crystal		-	11	Filter	(*)	Stainless steel
3	Base spacer		Polycarbonate resin	12	Spacer	(*)	Stainless steel
4	Electronic circuit board		Glass epoxy resin	13	O-ring	(*)	Fluoro rubber
5	Sensor cover	(*)	Stainless steel	14	C-snap ring	(*)	Stainless steel
6	Switch		Ethylene/propylene rubber	15	O-ring holder	(*)	Stainless steel
7	Sensor board	(*)	Alumina	16	Gasket	(*)	Fluoro rubber
8	Sensor body	(*)	Stainless steel	17	Case		Polyamide resin
9	Sensor chip	(*)	Semiconductor silicon	18	Switch		Ethylene/propylene rubber

(*): Cleaning parts for P80 specifications.

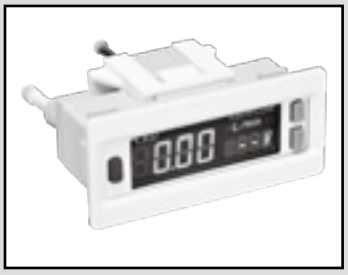

Compact flow rate sensor RAPIFLOW

FSM2 Series

Separated display

RoHS

Separated display specifications

1 MPa ≈ 145.0 psi, 1 MPa = 10 bar

Item				Separated display FSM2-D-[*1][*2]-□-[*3]
Settable flow rate range *1			mL	5, 10, 50, 100, 500, 1000
			L	2, 4, 5, 10, 12, 20, 25, 32, 50, 100, 200, 500, 1000
			m^3	1.5
Operating ambient temperature/humidity				0 (32°F) to 50°C (122°F)
Display				4 digit + 4 digit 2 color LCD
Input voltage				1 to 5 V
Output	Switch output	*1	N	Output 2 points (NPN open collector output, 50 mA or less, voltage drop 2.4 V or less)
			P	Output 2 points (PNP open collector output, 50 mA or less, voltage drop 2.4 V or less)
	Analog output	*2	V	1 to 5 V voltage output 1 point (connecting load impedance 50 kΩ or more) *6
			A	4 to 20 mA current output 1 point (connecting load impedance 0 to 300 Ω)
Power supply voltage		*2	V	12 to 24 VDC (10.8 to 26.4 V)
			A	24 VDC (21.6 to 26.4 V)
Current consumption *2				40 mA or less (when 24 VDC is connected, and no load is connected)
Lead wire				ø3.7, AWG26 or equivalent x 5-conductor (connector), insulator O.D. 1.0
Functions				Flow rate display, flow rate display peak hold, switch output, analog output
Degree of protection				IEC standards IP40 or equivalent
Protection circuit *3				Power reverse connection protection
EMC Directive				EN55011, EN61000-6-2, EN61000-4-2/3/4/6/8
Accessory				1 connector for sensors (e-con), compatible cable AWG 24 to 26, insulated outside diameter 1.0 to 1.2
Weight (main body only)				Approx. 40 g
Clean-room specifications *4	*3		P70	Anti-dust generation

*1: The flow rate range, flow direction and gas are automatically recognized only when the FSM3 bar display or FSM2 separated display is connected. (Default state)
The FSM-H Series, FSM-V Series and WFK3000 Series flow rate ranges are supported, but automatic recognition is not. Always set the product's flow rate range, flow direction and gas before use.
The connectable flow rate ranges are shown in "Display by flow rate range" below.
The gas setting function of this product is not a gas switching function (which switches sensor characteristics according to the gas).
If a "Gas Type Switching" function is required, use the LCD display type.
When the sensor section is changed, the previous flow rate range settings, etc., will still be recorded. Always reset the settings before using.
*2: Current for when 24 VDC is connected, and no load is connected. Please note that the current consumption changes depending on the load connection status.
*3: This product's protection circuit is effective only for specific misconnections and load short-circuits. It does not provide protection for all misconnections.
*4: [P70] Anti-dust generation (product surface is degreased and cleaned before packing. Heat seal into antistatic bags in clean bench (Class 1000 and over).)
*5: When connecting to the FSM-V Series or WFK3000 Series, the lead wire size is different so a separate compatible sensor connection connector (e-con) will be required. Contact your nearest CKD sales office or dealer.
The included sensor connection connector (e-con) can be used with the FSM2 Series, FSM3 Series and FSM-H Series.
*6: The output impedance of the analog output section is approx. 1 kΩ. If the impedance of the connecting load is small, output and error increase. Check error with the impedance of the connecting load before using.
*7: When connecting the FSM3 bar display with oxygen specifications, the gas display will be "Ai" (air, N2), but this does not constitute a problem for use.

Display for each flow rate range

Flow rate display	Display range																								
		Uni-direction	0 to 500 mL/min	0 to 1000 mL/min	0 to 2.00 L/min	0 to 4.00 L/min	0 to 5.00 L/min	0 to 10.00 L/min	0 to 12.0 L/min	0 to 20.0 L/min	0 to 25.0 L/min	0 to 32.0 L/min	0 to 50.0 L/min	0 to 100.0 L/min	0 to 200 L/min	0 to 500 L/min	0 to 1000 L/min	0 to 1.50 m^3/min	0 to 5.00 mL/min	0 to 10.00 mL/min	0 to 50.0 mL/min	0 to 100.0 mL/min
		Bi-direction	-500 to 500 mL/min	-1000 to 1000 mL/min	-2.00 to 2.00 L/min	—	-5.00 to 5.00 L/min	-10.00 to 10.00 L/min	—	-20.0 to 20.0 L/min	—	-	-50.0 to 50.0 L/min	-100.0 to 100.0 L/min	-200 to 200 L/min	-500 to 500 L/min	-1000 to 1000 L/min	-1.50 to 1.50 m^3/min	-5.00 to 5.00 mL/min	-10.00 to 10.00 mL/min	-50.0 to 50.0 mL/min	-100.0 to 100.0 mL/min
	Display resolution		1 mL/min		0.01 L/min				0.1 L/min						1 L/min			0.01 m^3/min	0.01 mL/min		0.1 mL/min	
Integrating functions *2	Display range		9999999 mL		99999.99 L				999999.9 L						9999999 L			99999.99 m^3	99999.99 mL		999999.9 mL	
	Display resolution		1 mL		0.01 L				0.1 L						1 L			0.01 m^3	0.01 mL		0.1 mL	
	Integrated pulse output rate		5 mL	10 mL	0.02 L	0.04 L	0.05 L	0.1 L	0.12 L	0.2 L	0.25 L	0.32 L	0.5 L	1 L	2 L	5 L	10 L	15 L	0.05 mL	0.1 mL	0.5 mL	1 mL

* The corresponding sensor is the voltage output (1-5 V) type. If the current output type or other voltage output type is connected, it will not operate properly.

*1: The flow rate display is rounded off at approximately ±1% or less (forced zero).
*2: The accumulated flow is a calculated (reference) value. It is reset when the power is turned OFF.

How to order

FSM2 - D - N V - 3 P - P70

- Ⓐ Output
- Ⓑ Analog output format
- Ⓒ Lead wire
- Ⓓ Bracket
- Ⓔ Clean-room specifications

Code	Description
Ⓐ Output	
N	Switch output (NPN) 2 points, analog output 1 point
P	Switch output (PNP) 2 points, analog output 1 point
Ⓑ Analog output format	
V	Voltage output (1 to 5 V)
A	Current output (4 to 20 mA)
Ⓒ Lead wire	
Blank	None
1	1 m
3	3 m
Ⓓ Bracket	
Blank	None
P	Panel mounting kit
Ⓔ Clean-room specifications	
Blank	None
P70	Anti-dust generation

CAUTION

The corresponding sensor is the voltage output (1 to 5 V) type. If the current output type or other voltage output type is connected, it will not operate properly. When using FSM3, use the bar display voltage output.

Dimensions

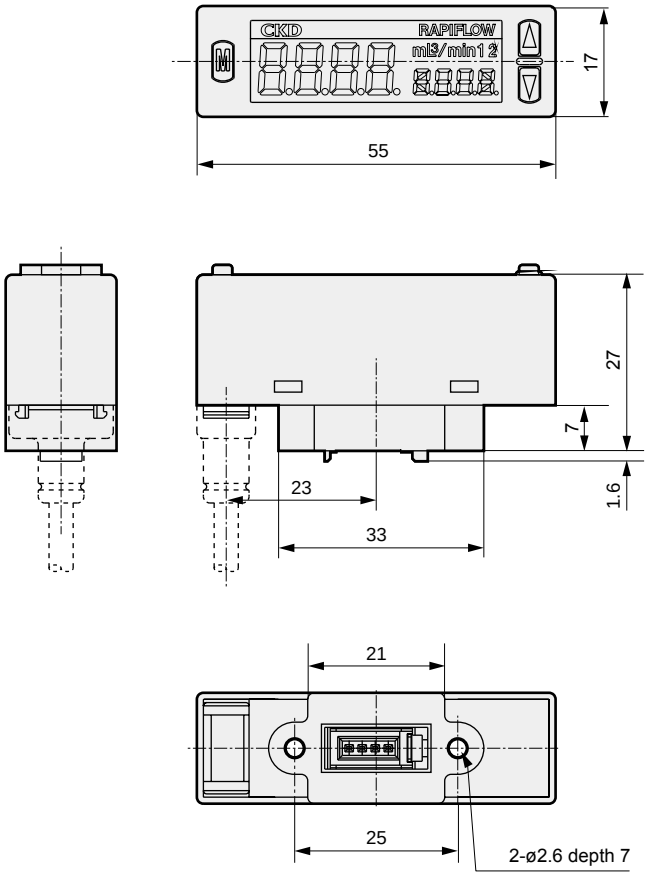

Internal structure diagram and parts list

● FSM2-D

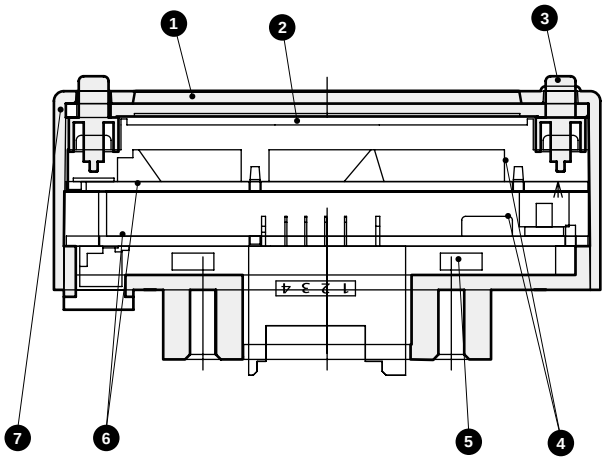

Cannot be disassembled

* The part materials are subject to change without notice.

Main parts list

No.	Part name	Material
1	Liquid crystal cover	Acrylic resin
2	Liquid crystal	-
3	Switch	Ethylene/propylene rubber
4	Base spacer	Polycarbonate resin
5	Back surface cover	Polyamide resin
6	Electronic circuit board	-
7	Case	ABS resin

Example of internal circuit and load connection

● FSM3-L□□□□□B/F/□□ (LCD display NPN output)

[CH2 is used as SW output]

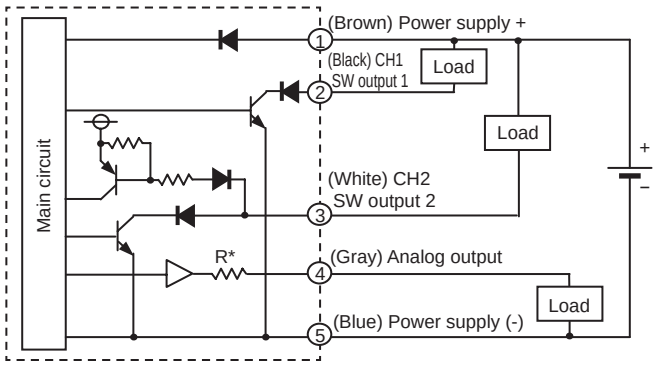

[CH2 is used as external input]

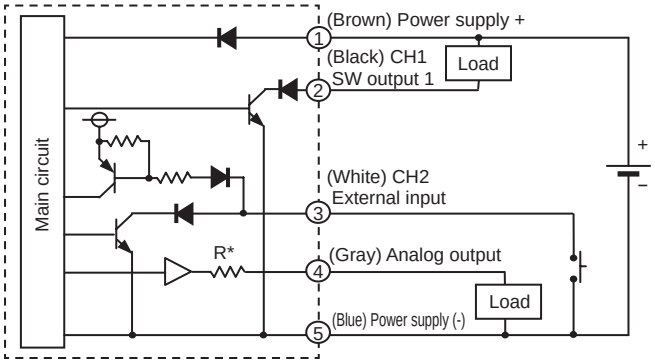

* Analog output voltage output R : approx. 1 kΩ
Current output R : approx. 100 Ω

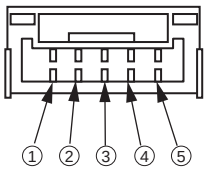

(FSM3 side)

Terminal No.	Option Lead wire color	Name
①	Brown	Power supply (+) (voltage output: 12 to 24 V, current output: 24 V)
②	Black	CH1 (Switch output 1: max. 50 mA)
③	White	CH2 (switch output 2: max. 50 mA, or external input)
④	Gray	Analog output Voltage output: 1 to 5 V load impedance 50 kΩ or more Current output: 4 to 20 mA load impedance 300 Ω or less
⑤	Blue	Power supply - (GND)

● FSM3-L□□□□□D/H/□□ (LCD display PNP output)

[CH2 is used as SW output]

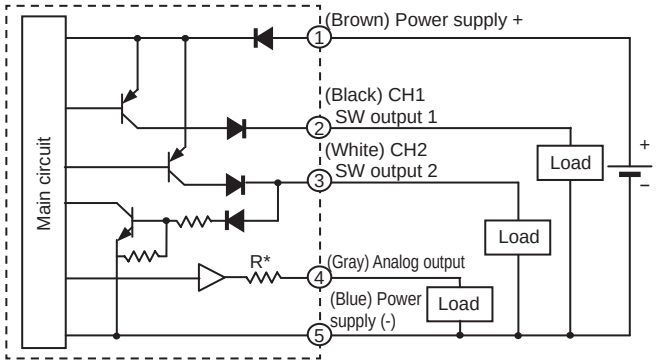

[CH2 is used as external input]

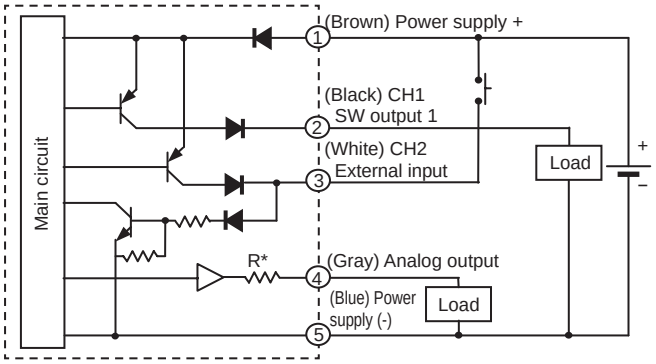

* Analog output voltage output R : approx. 1 kΩ
Current output R : approx. 100 Ω

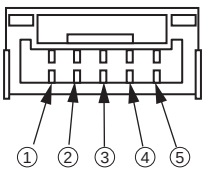

(FSM3 side)

Terminal No.	Option Lead wire color	Name
①	Brown	Power supply (+) (voltage output: 12 to 24 V, current output: 24 V)
②	Black	CH1 (Switch output 1: max. 50 mA)
③	White	CH2 (switch output 2: max. 50 mA, or external input)
④	Gray	Analog output Voltage output: 1 to 5 V load impedance 50 kΩ or more Current output: 4 to 20 mA load impedance 300 Ω or less
⑤	Blue	Power supply - (GND)

Example of internal circuit and load connection

● FSM3-L□□□□□A/E/□□
(LCD display, NPN output, with setting copy function)

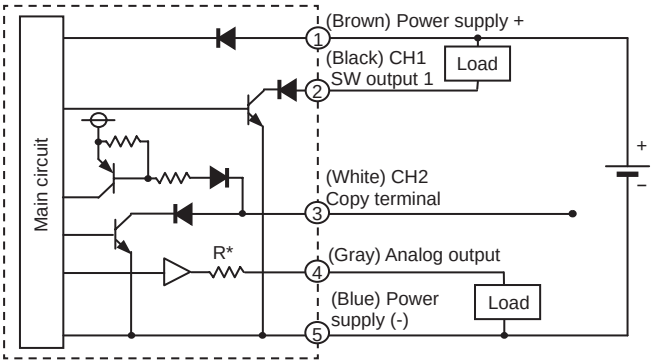

* Analog output voltage output R : approx. 1 kΩ
Current output R : approx. 100 Ω

● FSM3-L□□□□□C/G/□□
(LCD display, PNP output, with setting copy function)

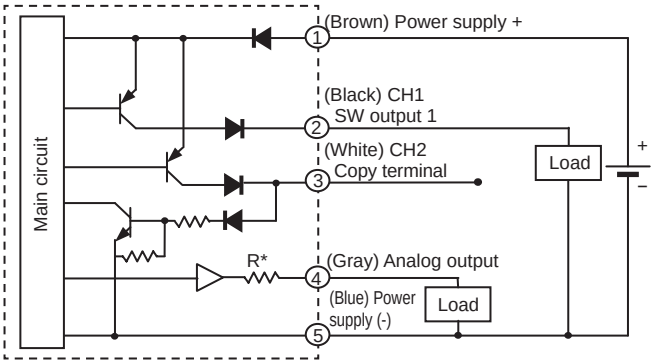

* Analog output voltage output R : approx. 1 kΩ
Current output R : approx. 100 Ω

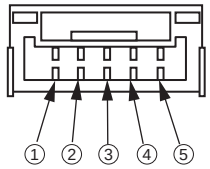

(FSM3 side)

Terminal No.	Option Lead wire color	Name
①	Brown	Power supply (+) (voltage output: 12 to 24 V, current output: 24 V)
②	Black	CH1 (Switch output 1: max. 50 mA)
③	White	CH2 (copy terminal)
④	Gray	Analog output Voltage output: 1 to 5 V load impedance 50 kΩ or more Current output: 4 to 20 mA load impedance 300 Ω or less
⑤	Blue	Power supply - (GND)

● FSM3-L□□□□□A/C/E/G/□□ (LCD display, with setting copy function)

[When using setting copy function]

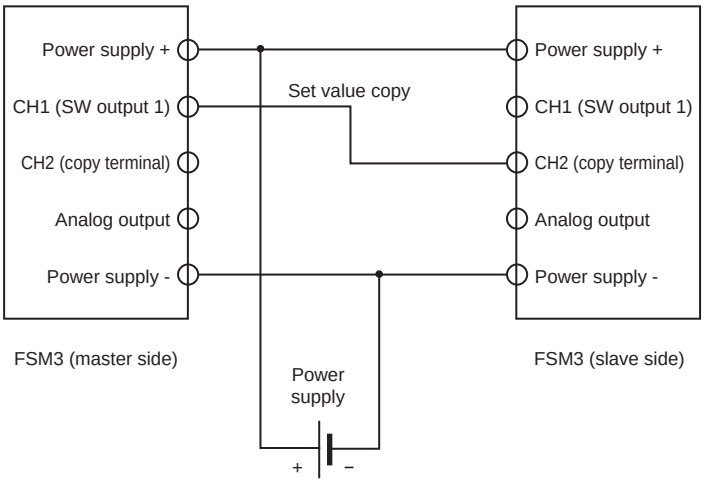

Connect CH1 (SW output 1) on the master side to CH2 (copy terminal) on the slave side and power ON the sensor to use the setting copy function (F93). Use this connection only when using the setting copy function. As in the above load connection example, if copying is performed with the load connected to CH1 or the switch is operated with CH1 and CH2 connected, the device may operate unexpectedly or the device and FSM3 may malfunction. Never use the product while connected to the copy terminal.

Example of internal circuit and load connection

● FSM3-B□□□□□J/K/□□ (bar display)

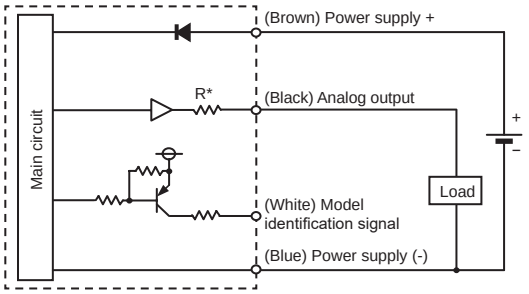

* Analog output voltage output R : approx. 1 kΩ
Analog output current output R : approx. 100 Ω

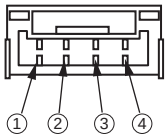

(FSM3 side)

Terminal No.	Option Lead wire color	Name
①	Brown	Power supply (+) (voltage output: 12 to 24 V, current output: 24 V)
②	Black	Analog output Voltage output: 1 to 5 V Load impedance 50 kΩ and over Current output: 4 to 20 mA Load impedance 300 Ω or less
③	White	Model identification signal: do not connect when using as a single unit
④	Blue	Power supply - (GND)

● Connecting the separated display and FSM3 bar display

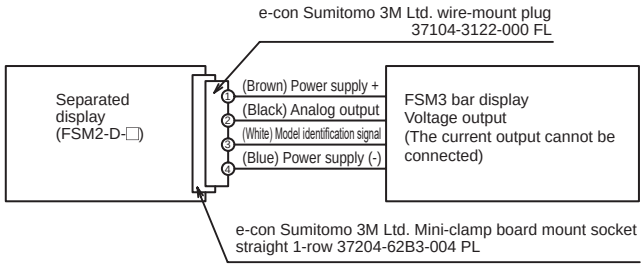

●FSM3-C□□□□□L□□ (IO-Link)

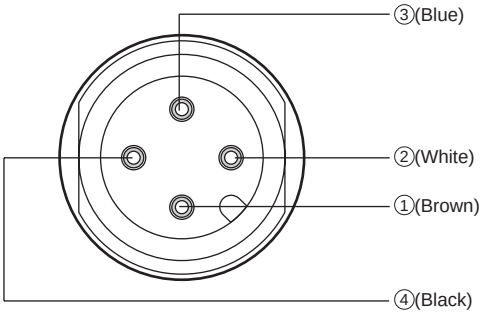

Terminal No.	Lead wire color	Name
①	Brown	Power supply + (18 to 30 V)
②	White	N.C.
③	Blue	Power supply - (GND)
④	Black	C/Q (IO-Link)

Analog output characteristics

Flow direction	Voltage output	Current output
[Uni-directional] 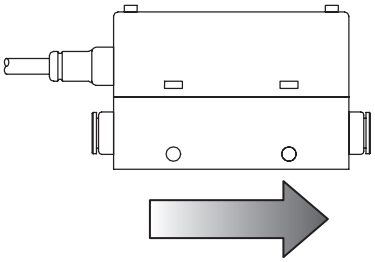	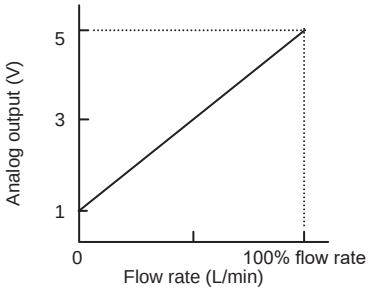	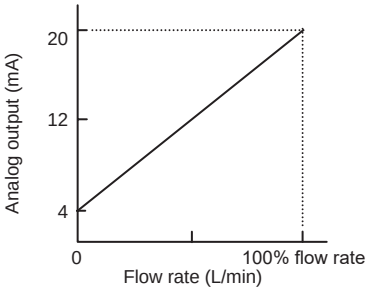
[Bi-directional] 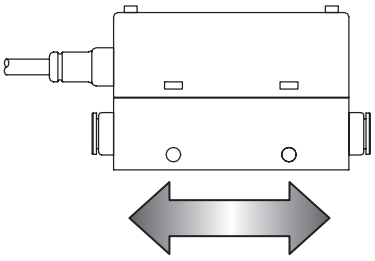	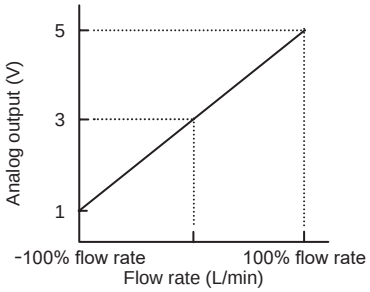	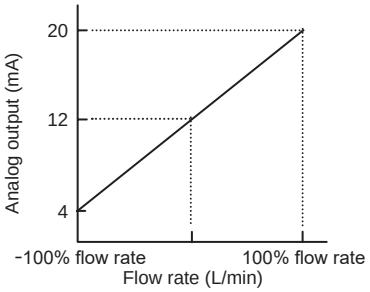

*1: The full scale of the uni-directional type is 0 to 100%, and full scale of the bi-directional type is -100% to 100%. With the integrated display bi-directional type, output can be changed to uni-direction. The value after switching is a reference value.
For details, refer to page 1435.
*2: Refer to page 1375 for analog output when switching to carbon dioxide.
*3: Analog output will be output even outside the measurement flow rate range. While outside the guaranteed accuracy, the lower and upper limits for voltage can be output at about 0.6 V and 5.4 V respectively; for current likewise, about 2.4 mA and 21.6 mA.

Pressure loss characteristics (resin body, air)

FSM3-□005□1

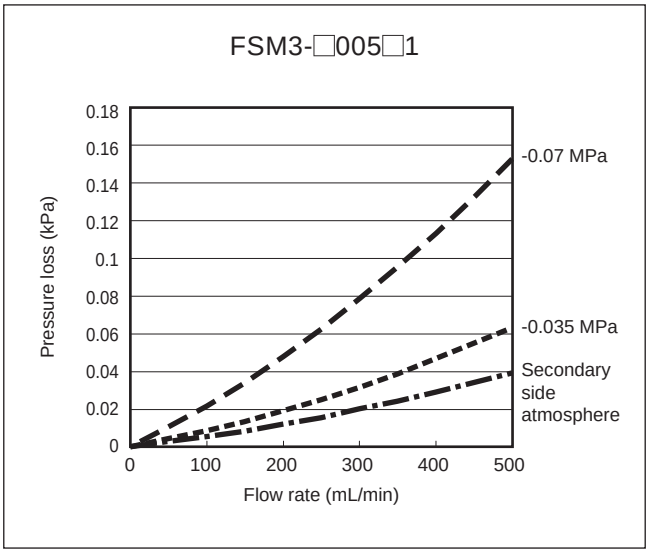

FSM3-□010□1

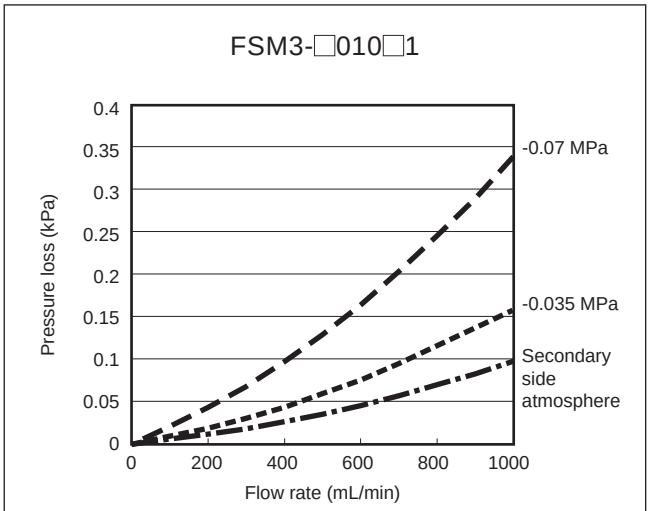

FSM3-□020□1

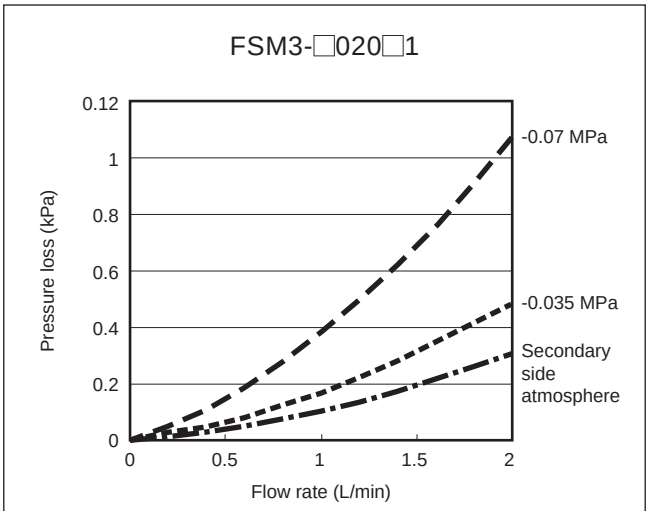

FSM3-□050□1

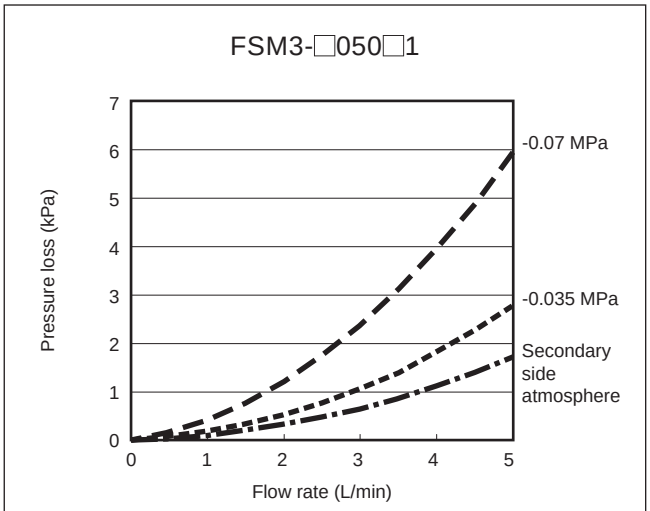

FSM3-□100□1

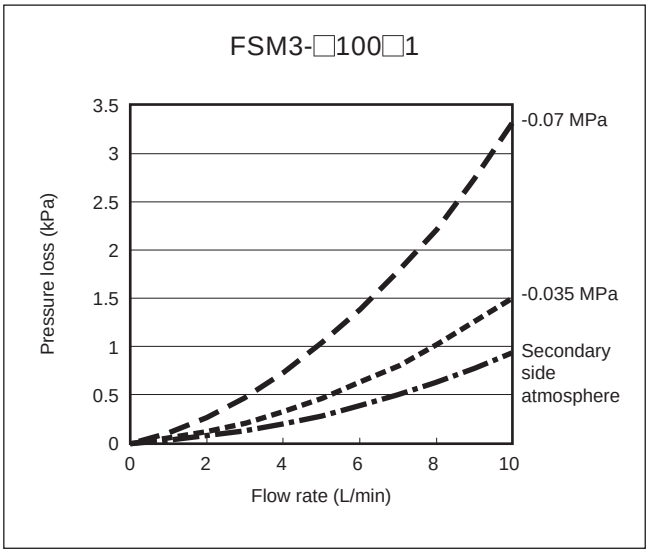

FSM3-□200□1

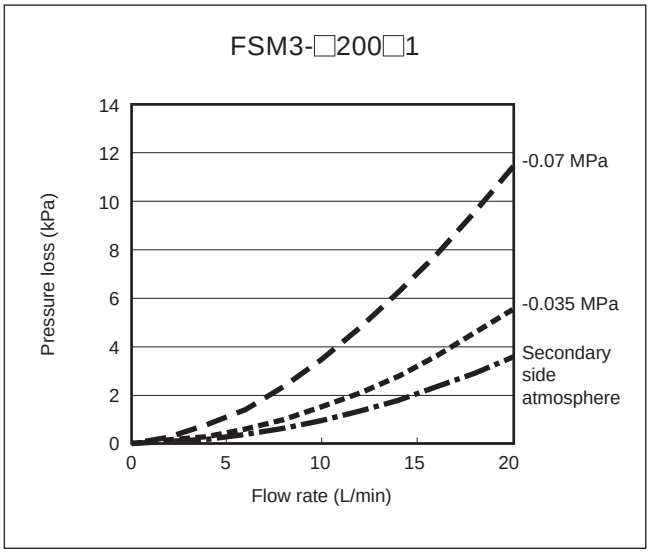

The graphs show data for air. For gases other than air, multiply by the following specific gravity as a guideline. Argon: 1.38, carbon dioxide: 1.53, argon 80% + carbon dioxide 20%: 1.41

Pressure loss characteristics (resin body, air)

FSM3-□500□1 (small body)

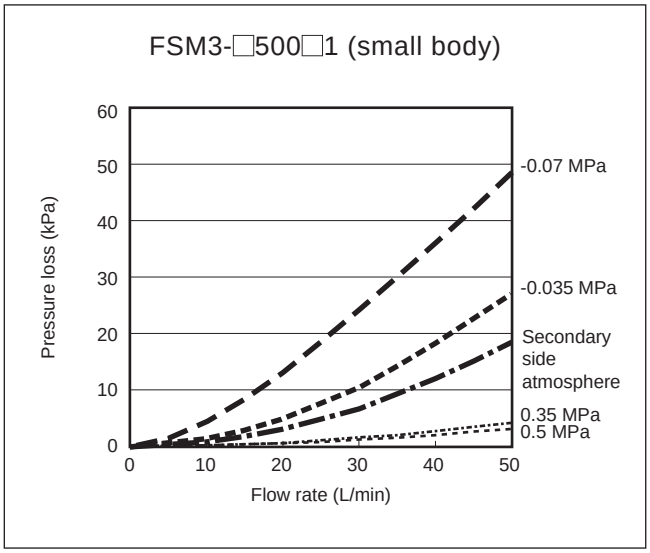

FSM3-□500□1 (medium body)

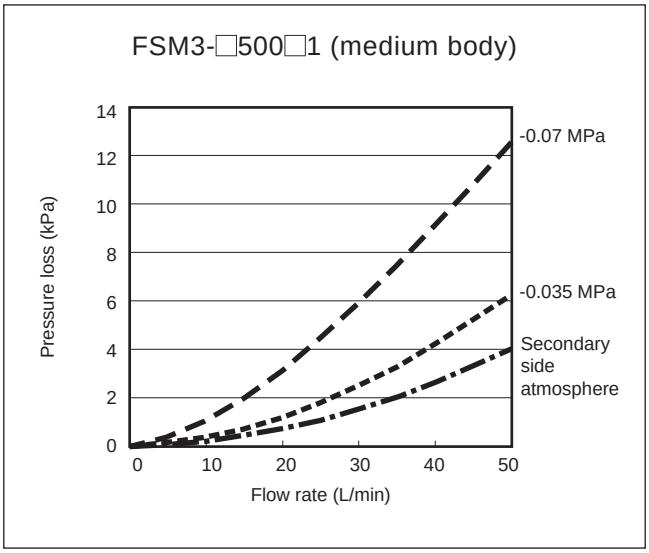

FSM3-□101□1

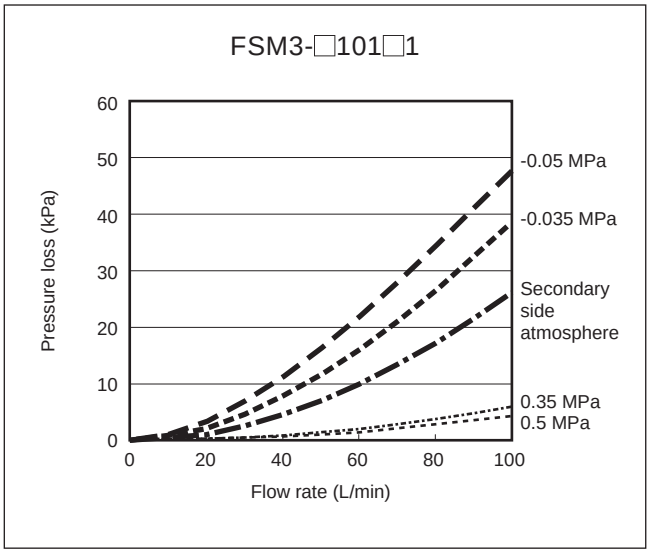

FSM3-□201□1

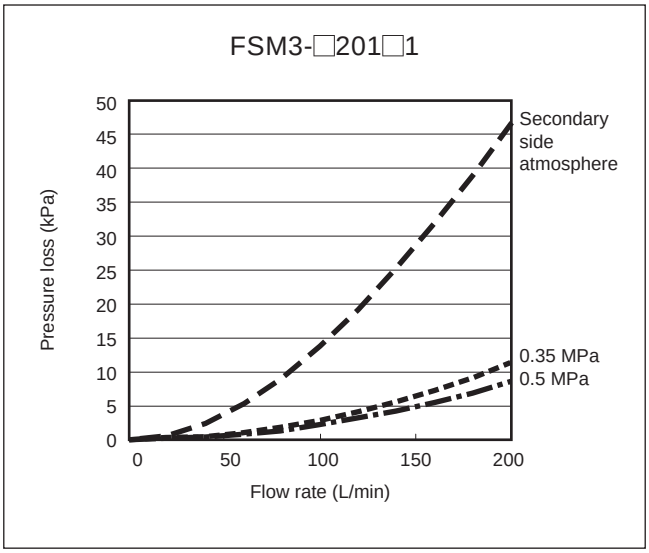

FSM3-□501□1

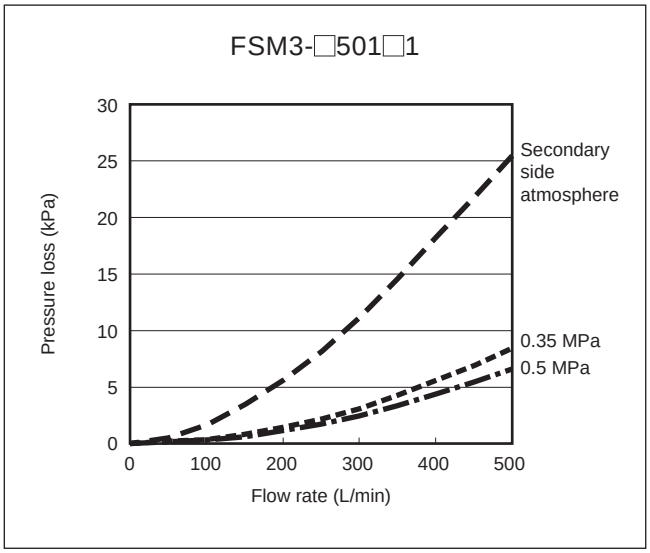

FSM3-□102□1

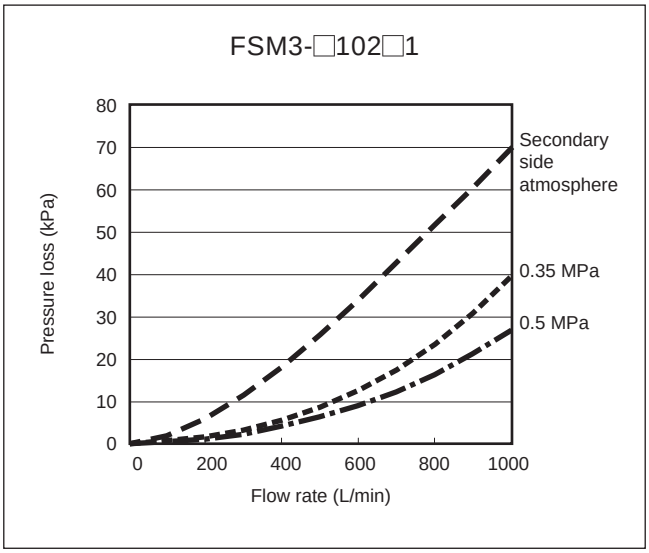

The graphs show data for air. For gases other than air, multiply by the following specific gravity as a guideline. Argon: 1.38, carbon dioxide: 1.53, argon 80% + carbon dioxide 20%: 1.41 (excluding 501 and 102)

Pressure loss characteristics (stainless steel body/air)

FSM3-□005U2□

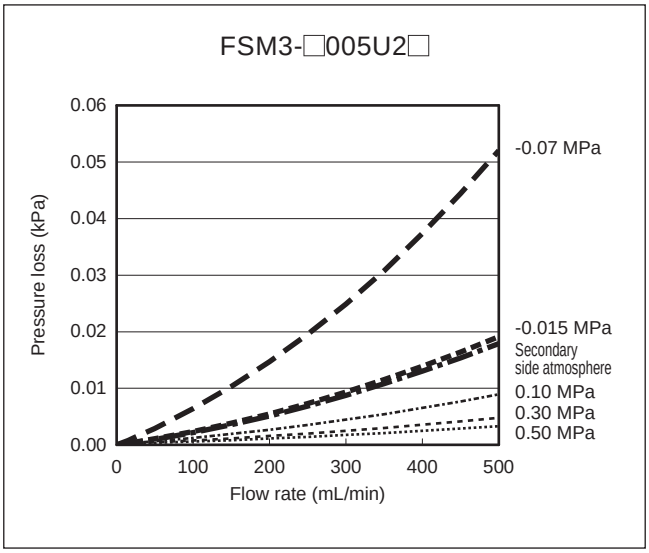

FSM3-□010U2□

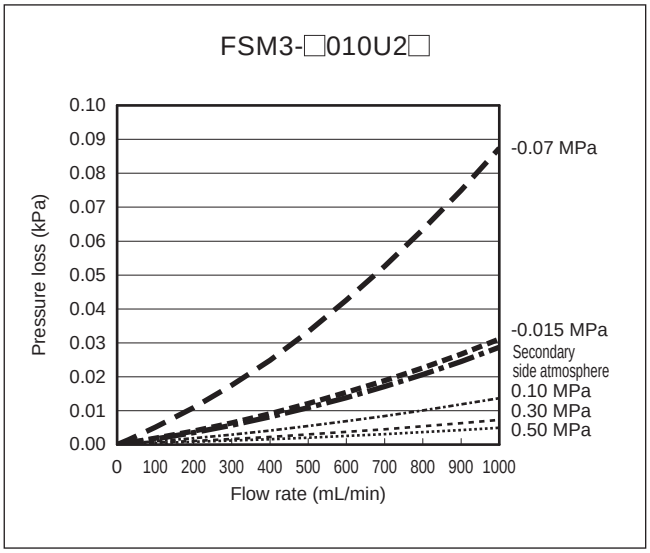

FSM3-□020U2□

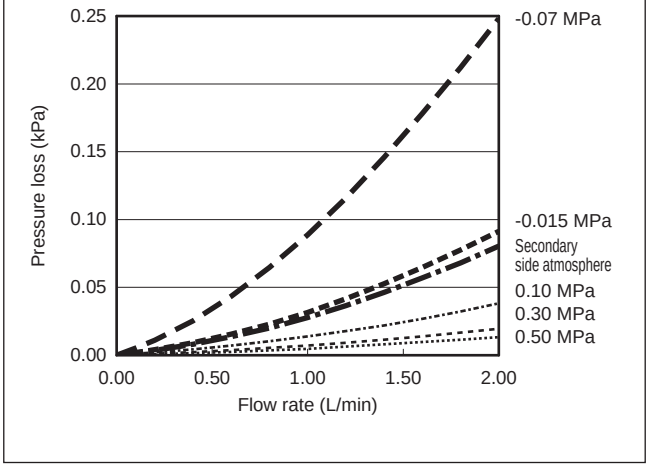

FSM3-□050U2□

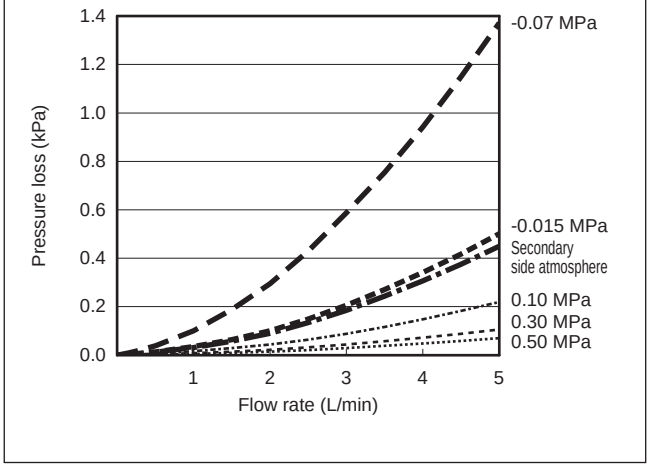

FSM3-□100U2□

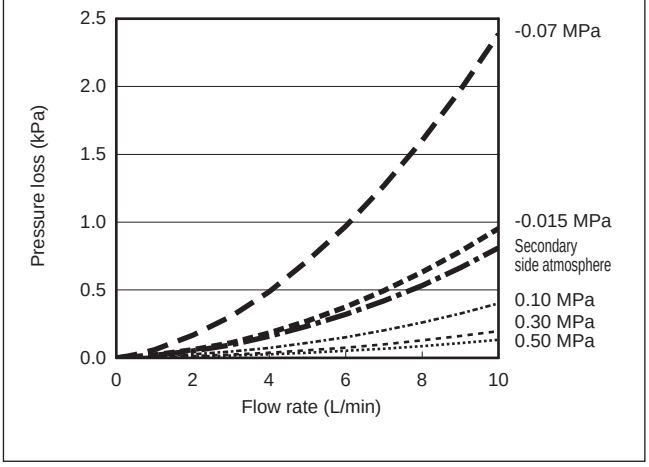

FSM3-□200U2□

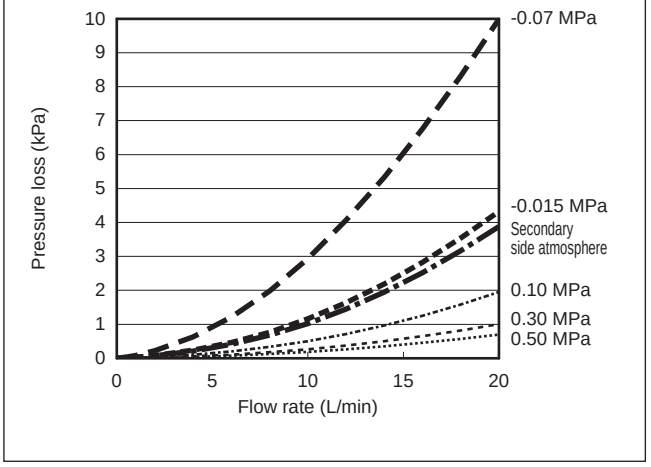

The graphs show data for air. For gases other than air, multiply by the following specific gravity as a guideline. Argon: 1.38, carbon dioxide: 1.53, argon 80% + carbon dioxide 20%: 1.41

Pressure loss characteristics (stainless steel body/air)

FSM3-□500U2□ (small body)

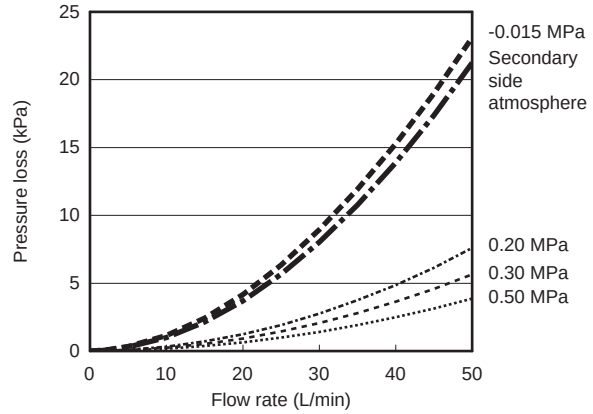

FSM3-□500U2□ (medium body)

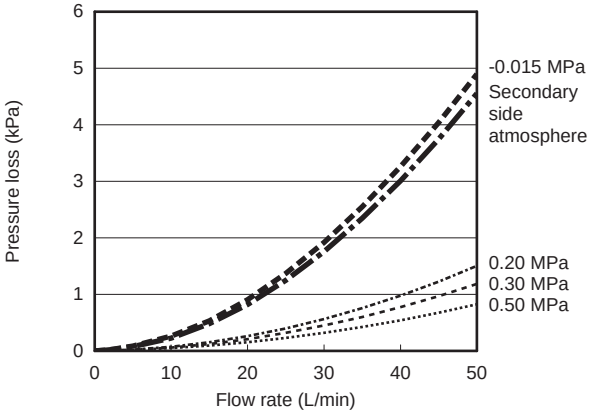

FSM3-□101U2□

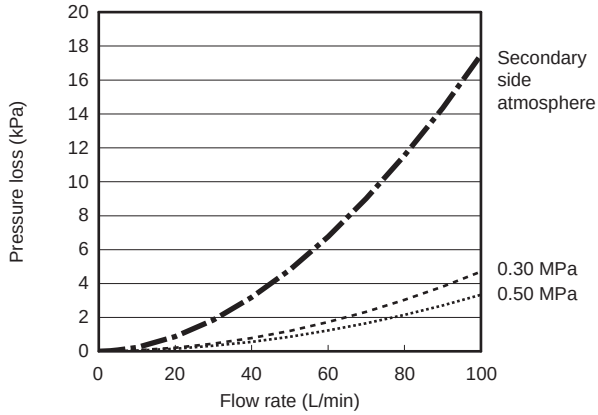

FSM3-□201U2□

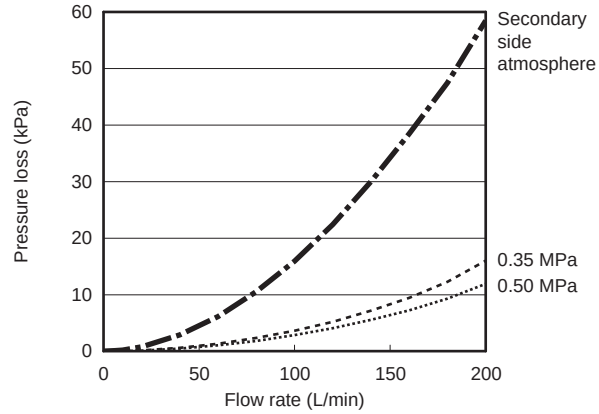

FSM3-□501U2□

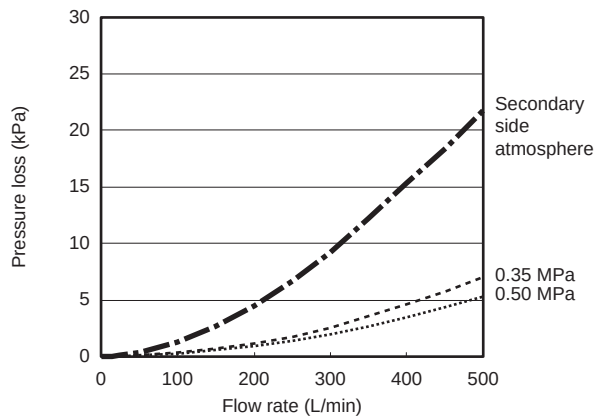

FSM3-□102U2□

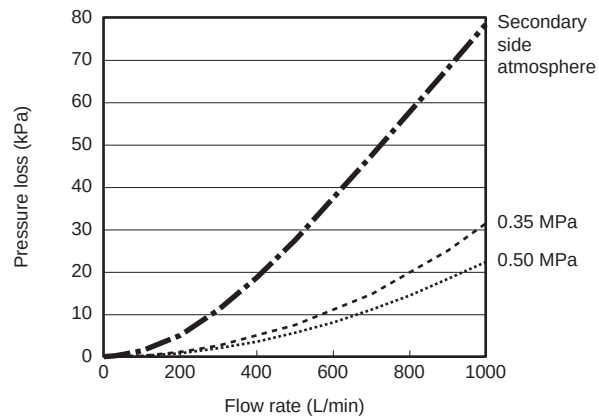

The graphs show data for air. For gases other than air, multiply by the following specific gravity as a guideline. Argon: 1.38, carbon dioxide: 1.53, argon 80% + carbon dioxide 20%: 1.41 (excluding 501 and 102)

MEMO

Needle valve flow characteristics (resin body) (for air, nitrogen gas)

● FSM3-L005/010/020

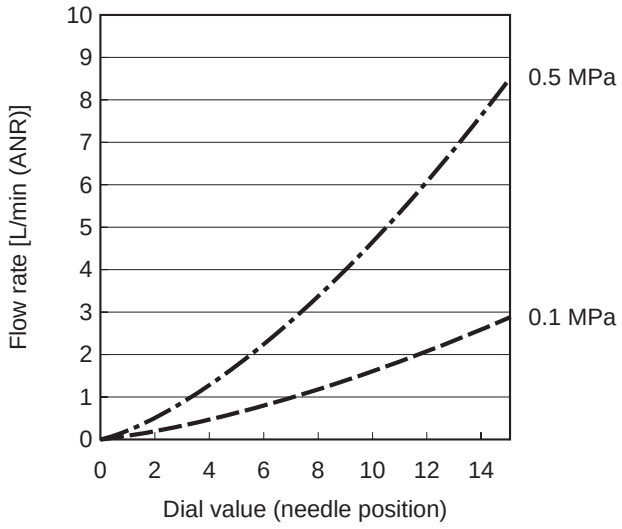

● FSM3-L050/100

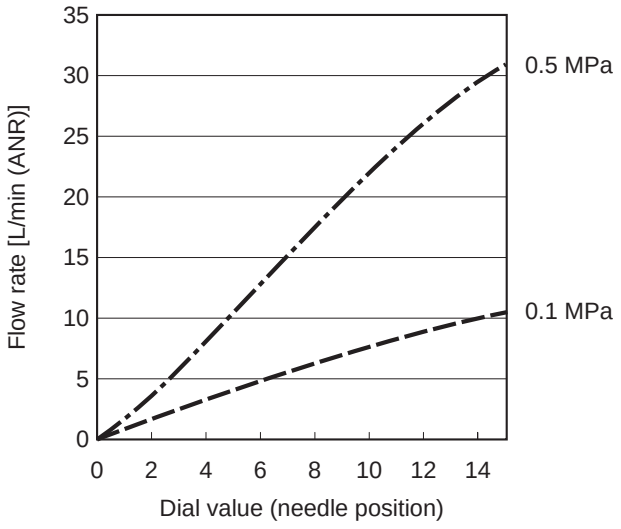

● FSM3-L200/500-H04/H06

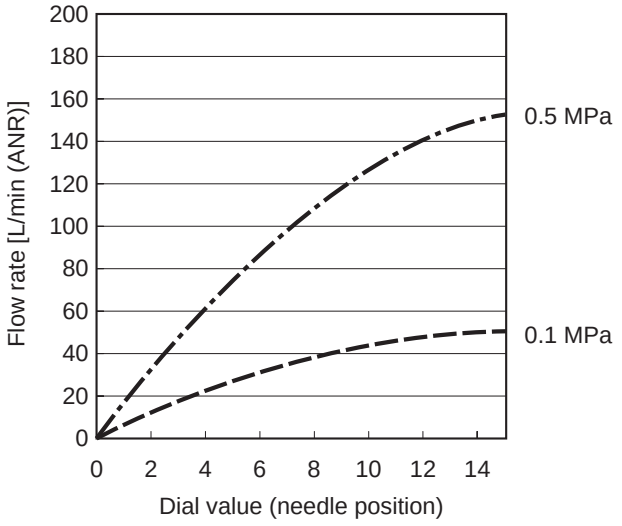

● FSM3-L500/101/201-H08/H10

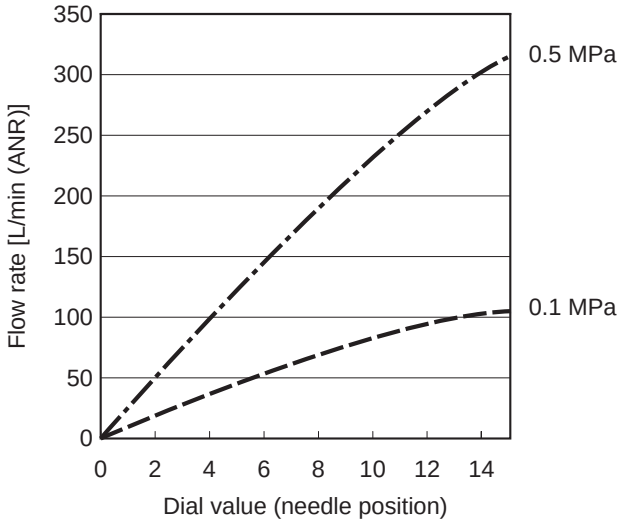

Needle valve flow characteristics (stainless steel body) (for air, nitrogen gas)

● FSM3-L005/010/020U2AA

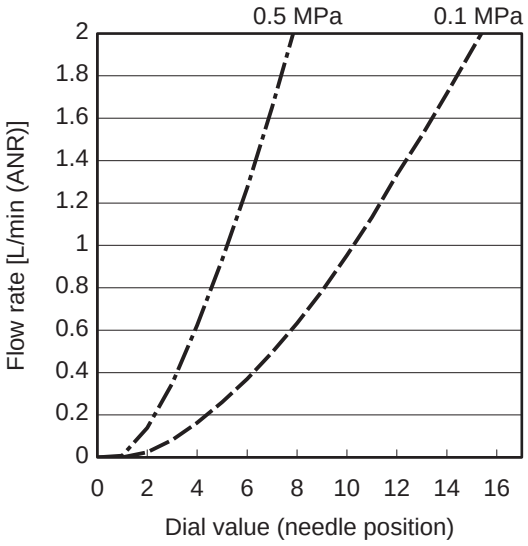

● FSM3-L050/100U2AA

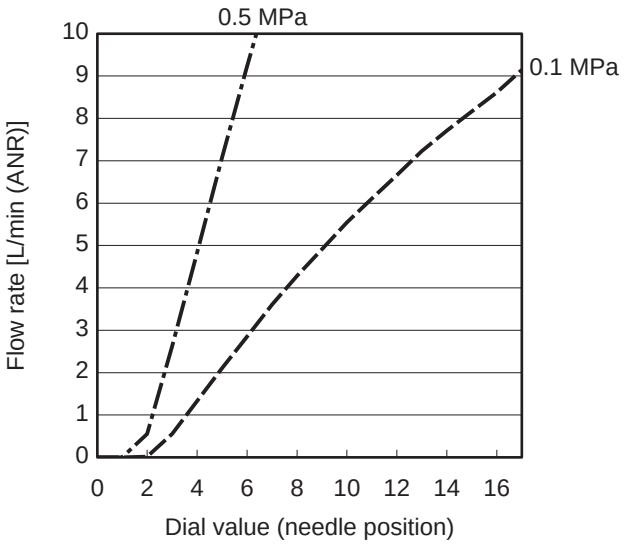

● FSM3-L200/500U2AA

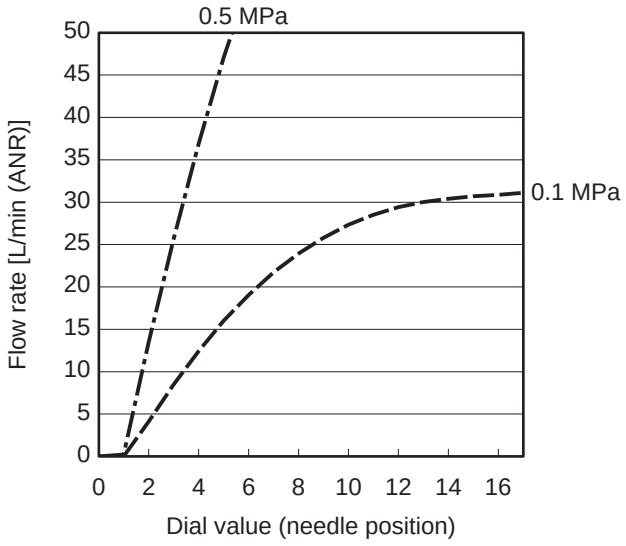

● FSM3-L500/101/201U2BA

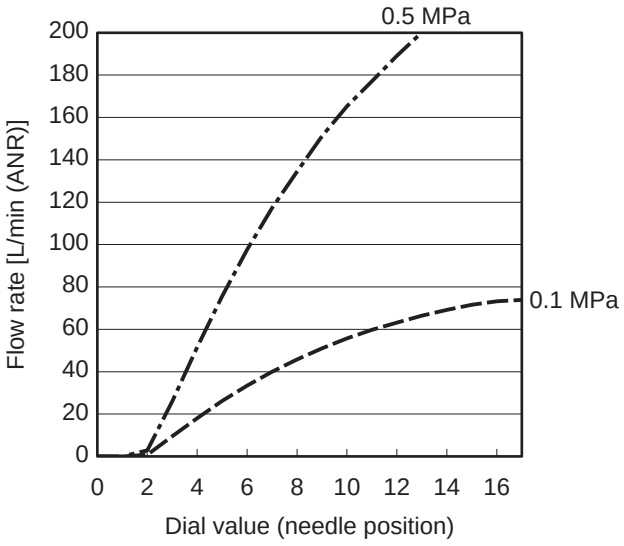

Measurement principle of FSM3 Series

The FSM3 Series incorporates a platinum sensor chip machined with silicon micro-machining. The sensor is thermally insulated from the silicon substrate. The heating capacity is extremely low, enabling high sensitivity with a high-speed response.

At the sensor, two temperature sensors are arranged with a heater in between. Platinum, which has a resistance that changes based on temperature, is used for the temperature sensor. When the heater is turned ON and heating occurs, the temperature distribution is symmetrical to the center of the heater if there is no flow. When flow is received, the symmetrical property of the temperature distribution is lost, temperature upstream from the heater drops, and temperature downstream rises. This temperature difference appears as the difference in temperature sensor resistance, and varies with the flow rate. When the flow is reversed, the temperature difference (difference in resistance) will be inverted. By using this method, the bi-directional flow rate can be detected. This method is suitable for detecting a relatively small flow rate.

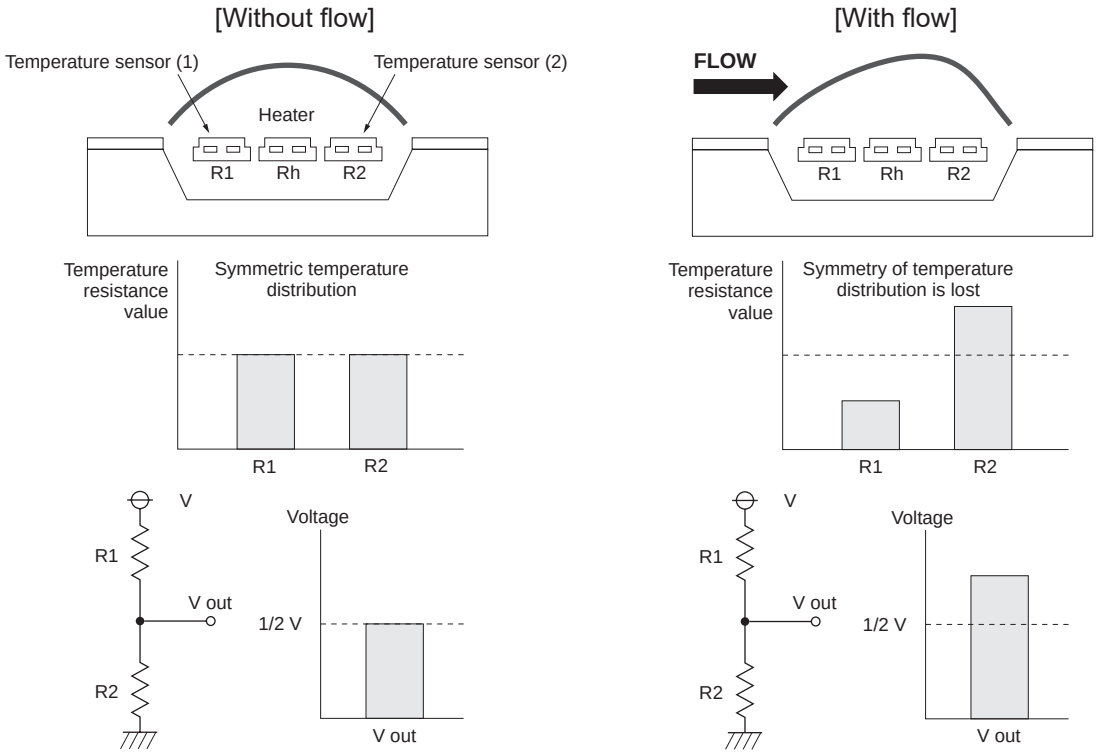

1 Flow rate sensor selection method

Use as a guideline for selection of the flow rate range when using the flow rate sensor for suction nozzle suction/release confirmation or leakage inspection.

The flow rate can be calculated using the effective cross-sectional area of nozzle (pinhole) and the pressure difference inside and outside the nozzle.

● For $P1 \geq 1.89P_2$ (acoustic velocity)
$Q = 113.2 \times S \times P_1$

● For $P1 < 1.89P_2$ (subsonic velocity)
$Q = 226.4 \times S \times \sqrt{P_2 (P_1 - P_2)}$

Q : Flow rate L/min
P_1 : Primary side absolute pressure MPa
P_2 : Secondary side absolute pressure MPa
S : Effective cross-sectional area of nozzle (pinhole) mm^2

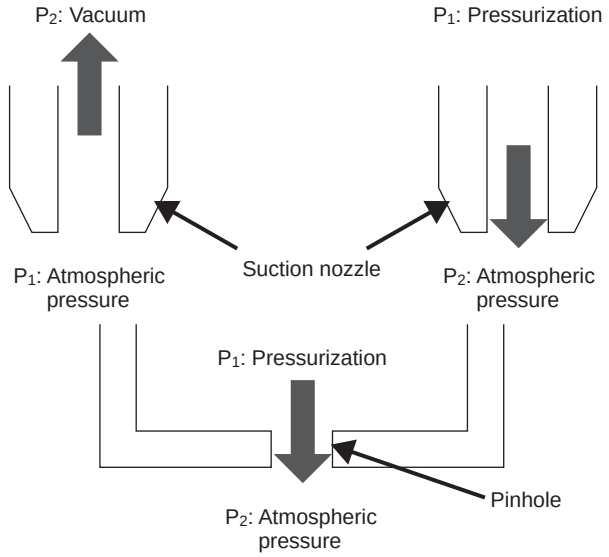

● Example of calculation

The calculated flow rate value when the nozzle diameter is ø0.1 to 2 and P2 is varied is shown in the figure below.

	P_1 (MPa) Absolute pressure	P_1 (MPa) Gauge pressure	P_2 (MPa) Absolute pressure	P_2 (MPa) Gauge pressure	Acoustic velocity/ subsonic velocity	Calculated flow rate value (L/min)								
						ø0.1	ø0.2	ø0.3	ø0.4	ø0.5	ø0.7	ø1	ø1.5	ø2
Vacuum	0.1013	0	0.0313	−0.07	Acoustic velocity	0.090	0.360	0.810	1.440	2.250	4.411	9.002	20.254	36.007
	0.1013	0	0.0413	−0.06	Acoustic velocity	0.090	0.360	0.810	1.440	2.250	4.411	9.002	20.254	36.007
	0.1013	0	0.0513	−0.05	Acoustic velocity	0.090	0.360	0.810	1.440	2.250	4.411	9.002	20.254	36.007
	0.1013	0	0.0613	−0.04	Subsonic velocity	0.088	0.352	0.792	1.408	2.200	4.312	8.800	19.801	35.202
	0.1013	0	0.0713	−0.03	Subsonic velocity	0.082	0.329	0.740	1.315	2.055	4.028	8.220	18.494	32.878
	0.1013	0	0.0813	−0.02	Subsonic velocity	0.072	0.287	0.645	1.147	1.792	3.512	7.166	16.125	28.666
	0.1013	0	0.0913	−0.01	Subsonic velocity	0.054	0.215	0.483	0.859	1.343	2.631	5.370	12.083	21.480
Blow (leakage inspection)	0.1113	0.01	0.1013	0	Subsonic velocity	0.057	0.226	0.509	0.905	1.414	2.772	5.657	12.727	22.626
	0.1213	0.02	0.1013	0	Subsonic velocity	0.080	0.320	0.720	1.280	2.000	3.920	8.000	17.999	31.998
	0.1413	0.04	0.1013	0	Subsonic velocity	0.113	0.453	1.018	1.810	2.828	5.543	11.313	25.454	45.252
	0.1613	0.06	0.1013	0	Subsonic velocity	0.139	0.554	1.247	2.217	3.464	6.789	13.856	31.175	55.423
	0.1813	0.08	0.1013	0	Subsonic velocity	0.160	0.640	1.440	2.560	4.000	7.840	15.999	35.998	63.996
	0.2013	0.1	0.1013	0	Acoustic velocity	0.179	0.716	1.610	2.862	4.472	8.765	17.888	40.248	71.552
	0.3013	0.2	0.1013	0	Acoustic velocity	0.268	1.071	2.410	4.284	6.694	13.119	26.774	60.242	107.096
	0.4013	0.3	0.1013	0	Acoustic velocity	0.357	1.426	3.209	5.706	8.915	17.474	35.660	80.236	142.641
	0.5013	0.4	0.1013	0	Acoustic velocity	0.445	1.782	4.009	7.127	11.137	21.828	44.547	100.230	178.186
	0.6013	0.5	0.1013	0	Acoustic velocity	0.534	2.137	4.809	8.549	13.358	26.182	53.433	120.224	213.731

(Precautions)
● If there is a leak in the piping etc., the actual flow rate will be larger than the calculated value. When selecting the flow rate, consider the amount of leakage in the piping.
● If there is a portion thinner than the suction nozzle diameter in the middle of the piping, the flow rate may be reduced, resulting in a flow rate lower than the calculated value. In addition, suction confirmation, etc., may become impossible.
● The effective cross-sectional area is only a guideline. When the nozzle is long and thin, the effective cross-sectional area becomes smaller than the opening area.
● The response time is determined by the inner volume of the piping from the flow rate sensor to suction nozzle (pinhole). For high-speed detection, reduce the inner volume of the piping as much as possible by installing a flow rate sensor near the suction nozzle, etc.

Product weight

Resin body

[Unit: g]

Fitting		LCD display		Bar display	IO-Link
Model No.	Description	Without needle valve	With needle valve		
BH1	Push-in (for ø4 mm straight)	60	90	50	50
CH1	Push-in (for ø6 mm straight)	50	80	40	50
DH1	Push-in (for ø8 mm straight)	80	120	70	80
EH1	Push-in (for ø10 mm straight)	80	120	70	80
HH1	Push-in (for ø1/4” straight)	60	90	50	50
JH1	Push-in (for ø3/8” straight)	80	120	70	80
AA1	Rc1/8 straight	60	90	50	50
BA1	Rc1/4 straight	60	100	50	60
CA1	Rc1/2 straight	120	−	110	120
AF1	G1/8 straight	70	100	60	70
BF1	G1/4 straight	85	125	75	85
CF1	G1/2 straight	120	−	110	120
AB1	G1/8 straight	60	90	50	60
BB1	G1/4 straight	70	110	60	70
CB1	G1/2 straight	140	−	130	140
AC1	NPT1/8 straight	50	80	50	50
BC1	NPT1/4 straight	60	100	50	60
CC1	NPT1/2 straight	120	−	110	120
BH2	Push-in (for ø4 mm elbow)	70	100	60	60
CH2	Push-in (for ø6 mm elbow)	60	90	50	60
DH2	Push-in (for ø8 mm elbow)	100	140	90	90
EH2	Push-in (for ø10 mm elbow)	100	140	90	100
HH2	Push-in (for ø1/4” elbow)	70	100	60	60
JH2	Push-in (for ø3/8” elbow)	100	140	90	100
AA2	Rc1/8 elbow	70	100	60	60
BA2	Rc1/4 elbow	80	120	70	80
AF2	G1/8 elbow	80	110	70	80
BF2	G1/4 elbow	105	145	95	105
AB2	G1/8 elbow	70	100	60	70
BB2	G1/4 elbow	90	130	80	90
AC2	NPT1/8 elbow	70	100	60	60
BC2	NPT1/4 elbow	80	120	70	80

Stainless steel body

[Unit: g]

Fitting		LCD display		Bar display	IO-Link
Model No.	Description	Without needle valve	With needle valve		
AA1	Rc1/8 straight	100	165	90	95
BA1	Rc1/4 straight	115	200	105	110
CA1	Rc1/2 straight	420	−	410	420
AF1	G1/8 straight	155	220	145	150
BF1	G1/4 straight	190	275	180	185
CF1	G1/2 straight	420	−	410	420
AB1	G1/8 straight	100	165	90	95
BB1	G1/4 straight	110	195	100	105
CB1	G1/2 straight	440	−	430	440
AC1	NPT 1/8 straight	100	165	90	95
BC1	NPT 1/4 straight	115	200	105	110
CC1	NPT 1/2 straight	420	−	410	420
AD1	1/4" double barbed fitting (500 mL/min to 50 L/min)	155	220	145	150
BD1	1/4" double barbed fitting (50 L/min to 200 L/min)	190	275	180	190
AE1	1/4" JXR male fitting (500 mL/min to 50 L/min)	155	220	145	150
BE1	1/4" JXR male fitting (50 L/min to 200 L/min)	190	275	180	190

MEMO

Names and functions of display/operation section (LCD display)

Display section name

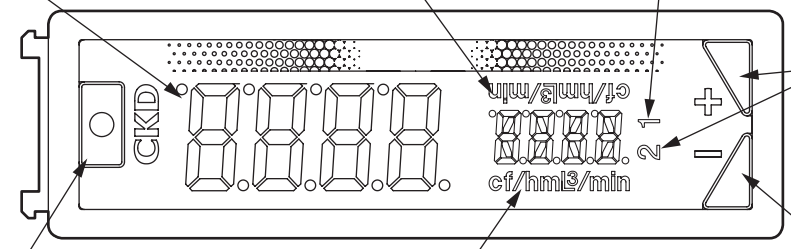

Main display section (green/red)
- Displays the flow rate and output setting value.
- Display color can be changed.

Flow rate unit display
- Displays the flow rate unit.

Output (OUT1) display
- Lights when switch CH1 output is ON.
- Blinks together with the background when overcurrent is detected.

Output (OUT2) display (green)
- Lights when switch CH2 output is ON.
- Blinks together with the background when overcurrent is detected.

+ Key
- Starts reading peak hold and accumulated flow.
- Successively moves to the next function selection screen.
- When setting each data, this key is used to count up the values, etc.

MODE key
- Sets when entering each setting mode.
- Used to return to flow rate display.

Sub-display section (green/red)
- Displays the flow direction/operation status, etc.
- Display color can be changed.
- The type of gas can be changed.

− Key
- Stops reading peak hold and accumulated flow.
- Successively moves to the next function selection screen.
- When setting each data, this key is used to count down the values, etc.

Error code

Error code	Cause	Countermeasures
Hi	The flow rate exceeds the flow rate display range.	Reduce the instantaneous flow rate value to within the flow rate range.
	Sensor is damaged.	Confirm that the flow rate is within the flow rate range, and turn power ON again. If the error is not resolved, a probable cause is a product failure. Replace the product. If you feel that there is an abnormality with the product, stop use and contact your CKD branch or dealer.
Lo	The flow rate is below the lower limit of the flow rate display range.	Increase the instantaneous flow rate value to within the flow rate range.
	Sensor is damaged.	Confirm that the flow rate is within the flow rate range, and turn power ON again. If the error is not resolved, a probable cause is a product failure. Replace the product. If you feel that there is an abnormality with the product, stop use and contact your CKD branch or dealer.
E01	An error occurred during CPU processing.	Turn power ON again. If the error is not resolved, a probable cause is a product failure. Replace the product. If you feel that there is an abnormality with the product, stop use and contact your CKD branch or dealer.
E02	Exceeded the zero adjustment range.	Make sure to set the flow rate to zero, and then perform the zero adjustment.
E03	An error occurred during EEPROM reading or writing.	Turn power ON again. If the error is not resolved, a probable cause is a product failure. Replace the product. If you feel that there is an abnormality with the product, stop use and contact your CKD branch or dealer.
E04	An error occurred during memory reading or writing.	Turn power ON again. If the error is not resolved, a probable cause is a product failure. Replace the product. If you feel that there is an abnormality with the product, stop use and contact your CKD branch or dealer.
E06	Sensor failed.	Turn power ON again. If the error is not resolved, a probable cause is a product failure. Replace the product. If you feel that there is an abnormality with the product, stop use and contact your CKD branch or dealer.
E09	Settings copy failed.	Check the connection and try again.
Loc	Button operations are locked.	Release the lock before operation.
0000 PIn	A password has been set.	Enter the set PIN. * Be careful not to forget your PIN number.
Blinking of output display (Switch output is not output)	The switch output's overcurrent protection circuit has operated.	Check whether load current exceeds the rating. Correctly connect, then turn the power ON again.

Names and functions of display/operation section (LCD display)

The function and various settings may be performed during normal flow rate display or after entering each mode.
The modes are also divided into Maintenance mode, SET mode, and Setting Monitor mode according to the frequency of use.

●Normal operation (RUN mode)

Descriptions	Explanation	Default setting
Instantaneous flow rate display	Displays the instantaneous flow rate.	Display (measurement)
Peak hold function	Max. and min. values for the flow rate within a set interval are displayed.	Hidden (Stopped)
CO_2 discharge display	Power/discharge pressure/flow rate of compressor, power ⇔ CO_2By setting the conversion coefficient, you can learn how much CO2 is being discharged. (reference value obtained by calculation) This is available only when the gas type is set to air.	Hidden (Stopped)
Accumulated flow display	The accumulated flow can be displayed. The switch output function includes a function to turn the switch ON/OFF at a level higher than the recommended cumulative value, and an integrated pulse function to output the pulse at a set cumulative value.	Non-display (measurement)

●SET mode

No.	Descriptions	Explanation	Default setting
F.01	Selection of CH1 operation	Select the CH1 feature. Switch output operation and integrated pulse settings can be set.	No switch output
F.02	Selection of CH2 operation	Select the CH2 setting. Select whether to use CH2 as a switch output, or to use as an external input (integrated value reset/auto reference).	No switch output
F.03	Integrating function settings	You can choose to acquire integrating flow values consecutively or at set times. You can also choose to keep the data or not.	Continuous acquisition: Data hold OFF
F.04	Sub-screen display setting	Set the sub-display section's display method. The display can be switched to “flow direction”, “reference state”, “gas type”, or “numbering display”.	Flow direction
F.05	Display color setting	Set the display color. (red, green) The color for a normal display and for switch output ON can be set.	At normal: Green At switch ON: Red
F.06	Flow rate direction setting (Bi-directional only)	Setting the flow direction. Setting available for bi-directional, one-sided forward direction or one-sided reverse direction.	Bi-direction
F.07	Display inversion function	The LCD display can be vertically inverted.	Standard display
F.08	Reference state setting	Select from the standard state or reference state. Standard state (ANR): Converted into volumetric flow rate at 20 °C, 1 barometric pressure, relative 65% (For gas types other than air: 20 °C, 1 barometric pressure, 0% RH) Reference state (NOR): Converted into volumetric flow rate at 0°C, 1 barometric pressure, 0% RH	ANR
F.09	Unit setting (For overseas only)	The units can be set. Can be selected from L/min, cf/h (cf/min).	Domestic model: L/min Overseas model: L/min
F.10	Display cycle setting	The digital display refresh cycle can be set in three stages from 0.25sec to 1sec. If the display flickers, it may be improved by setting a longer display refresh cycle.	0.5 sec
F.11	Analog output Setting response time	Set the response time. The response can be set in seven steps from 0.05sec to 1.50sec. Chattering and mis-operation caused by sudden flow rate changes or noise are prevented.	0.05 sec
F.12	Numbering setting	You can set the numbering.	0000
F.13	Gas switching	The measured gas can be changed. (Model with full scale flow rate of 200 L/min or below) (The gas type cannot be switched on an oxygen type.)	Air
F.14	Setting ECO mode	An ECO mode can be set. If the buttons are not operated for approx. one minute, the eco mode will activate and turn OFF the display's backlight. Current consumption can be reduced with this mode.	OFF
F.15	CO_2 discharge calculation setting	The CO_2 discharge calculation can be set. Set your compressor power, discharge pressure, flow rate, and CO_2 conversion coefficient.	• POWER: 0.20 KW • Pressure: 0.10 MPa • Flow rate: 100 L/min • Conversion factor: 0.000 kg (CO_2)/kwh
F.16	Lock setting	You can set the key lock method and the PIN code method. Use selectively depending on the working environment.	OFF
F.17	Peak hold setting	You can choose to acquire peak bottom values consecutively or at set times. You can also choose to keep the data or not.	Continuous acquisition: Data hold OFF

●Maintenance mode

No.	Descriptions	Explanation	Default setting
F.91	Forced output function	Use this function to forcibly turn the switch output ON and confirm the wiring connection or initial operation of the input device.	-
F.92	Zero adjustment	The zero point deviation is compensated.	Adjust value: 000
F.93	Setting copy function	Set values can be copied if the model supports copying between two FSM3's. (Copying is only possible between products with the same model No.)	-
F.99	Reset function	Returns the settings to the default settings.	-

●Setting monitor mode

Descriptions	Explanation	Default setting
Settings monitor function	Details set in the SET mode can be confirmed. (Setting details cannot be edited.)	-

Names and functions of display/operation section (bar display type)

● Display section name

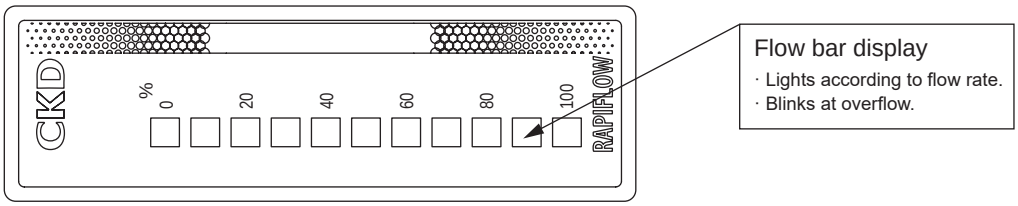

<Example> Display in the case of FSM3-B101□□□□□□□

Flow rate	Uni-direction	Bi-direction
0%	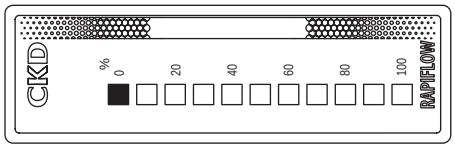	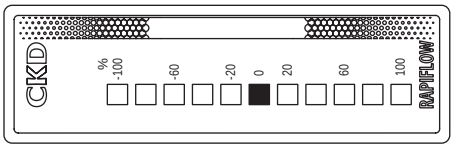
+60% (Forward direction)	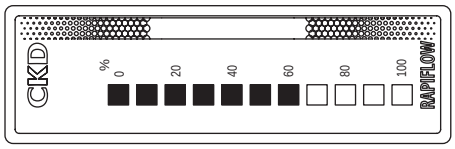	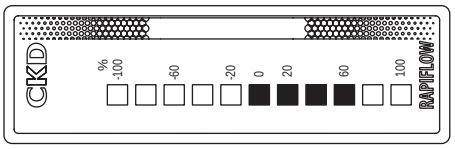
+110% (Forward direction) Blinks at overflow. *Blinks at +110% F.S. or more.	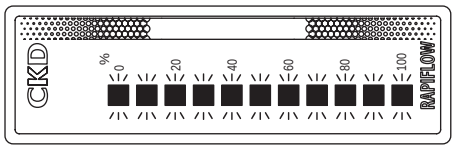	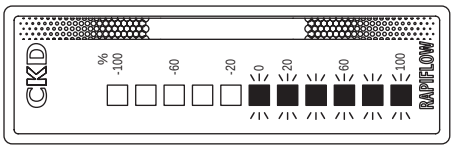
-10% (Reverse direction)	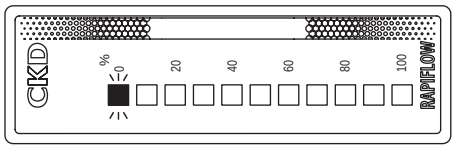	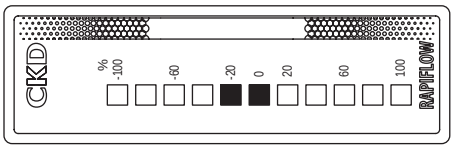
-110% (Reverse direction)	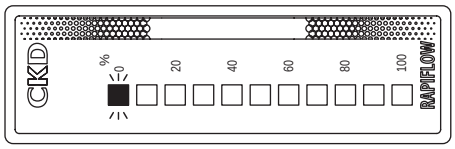	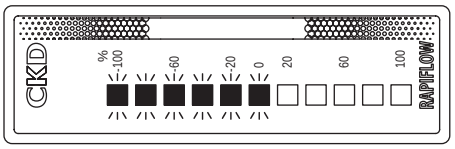

● Error code

Error code	Cause	Countermeasures
The third from left blinks 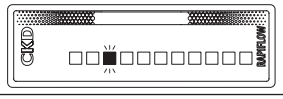	An error occurred during memory reading or writing.	Turn power ON again. If the error is not resolved, a probable cause is a product failure. Replace the product. If you feel that there is an abnormality with the product, stop use and contact your CKD branch or dealer.
[Uni-direction] All blink 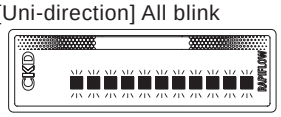	The flow rate exceeds the flow rate display range.	Reduce the instantaneous flow rate value to within the flow rate range.
[Bi-direction] Right half blinks 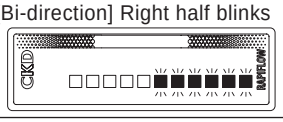	Sensor failure	Confirm that the flow rate is within the flow rate range, and turn power ON again. If the error is not resolved, a probable cause is a product failure. Replace the product. If you feel that there is an abnormality with the product, stop use and contact your CKD branch or dealer.
[Uni-direction] The leftmost blinks 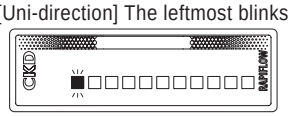	The flow rate is below the lower limit of the flow rate display range.	Increase the instantaneous flow rate value to within the flow rate range.
[Bi-direction] The left half blinks 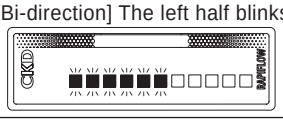	Sensor failure	Confirm that the flow rate is within the flow rate range, and turn power ON again. If the error is not resolved, a probable cause is a product failure. Replace the product. If you feel that there is an abnormality with the product, stop use and contact your CKD branch or dealer.

MEMO

Names and functions of display/operation section (IO-Link)

●IO-Link

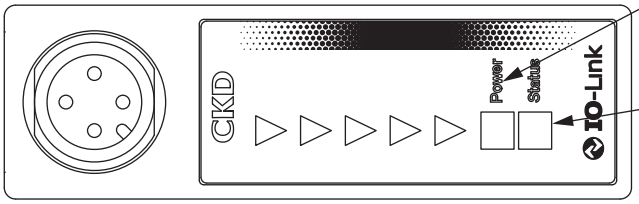

Power lamp (green)
- Lights when power supply is ON.
- Blinks during IO-Link communication.

Status lamp (green, orange, red)
- Green: Lights when the flow rate is within the specified range.
- Orange: Turns ON when flow rate is over 100% F.S. and below 110% F.S. Lights when a warning occurs.
- Red: Turns ON when flow rate exceeds 110% F.S. Lights when an error occurs.

*Lamp goes OFF when flow rate is below ±3% F.S.

●Communication specifications

Descriptions	Details
Communication protocol	IO-Link
Communication protocol version	V1.1
Transmission bit rate	COM2 (38.4kbps)
Port	Class A
Process data length (input)	4 byte
Process data length (output)	0 byte
Min. cycle time	5ms
Data storage	1kbyte
SIO mode support	No

Bit	31	30	29	28	27	26	25	24	23	22	21	20	19	18	17	16
Data name	MSB															LSB
	Instantaneous flow rate															
Data range	Refer to Table 1															
Format	Integer16															

Bit	15	14	13	12	11	10	9	8	7	6	5	4	3	2	1	0
Data name	Error	WARNING	-	-	-	-	Switch output		Vacant							
							2	1								
Data range	True/False															
Format	Boolean															

Data range (Table 1)

			005	010	020	050	100	200	500	101	201	501	102
Data range (□/min)	[B]	U	-50 to 550mL	-100 to 1100mL	-0.20 to 2.20L	-0.50 to 5.50L	-1.00 to 11.00L	-2.0 to 22.0L	-5.0 to 55.0L	-10.0 to 110.0L	-20 to 220L	-50 to 550L	-100 to 1100L
		B	-550 to 550mL	-1100 to 1100mL	-2.20 to 2.20L	-5.50 to 5.50L	-11.00 to 11.00L	-22.0 to 22.0L	-55.0 to 55.0L	-110.0 to 110.0L	-220 to 220L	-550 to 550L	-1100 to 1100L

*The data range changes when CO_2 is set as the gas type. Refer to page 1411.
*Download the IO-Link configuration files (IODD) from the CKD website (https://www.ckd.co.jp/en/).

● Explanation of functions (IO-Link)

Item	Explanation	Default setting
Instantaneous flow rate display	Displays the instantaneous flow rate.	–
Accumulated flow display	Displays the accumulated flow counted after indicating to start logging.	Stop
Instantaneous flow rate peak value display (Peak hold function)	Displays the maximum and minimum instantaneous flow rate values during the period between indicating to start logging and stop logging.	Stop
Error display	Displays the error details.	–
Warning display (WARNING)	Displays the warning details.	–
Power ON time display	Displays the total power ON time from the start of use. This time is not reset even if the power turns OFF. (Also not reset when using the reset setting)	–
Switch output function	The switch output operation function can be set. This function can be used to monitor whether the flow rate is within the set range or monitor whether it exceeds the set flow rate.	Not set
Flow rate standard setting	The flow rate standard can be selected. Standard conditions (ANR): Converted into volumetric flow rate at 20°C, 1 barometric pressure, 65% RH (For gases other than air: 20°C, 1 barometric pressure, 0% RH) Standard conditions (NOR): Converted into volumetric flow rate at 0°C, 1 barometric pressure, 0% RH	ANR
Gas switching	The measured gas can be switched. (Model with full scale flow rate of 200 L/min or below. The gas type cannot be switched on an oxygen type)	Air
Change travel average (Setting response time)	The travel average when measuring can be set. The average can be set in seven steps from 50 msec to 1500 msec. Chattering and mis-operation caused by sudden flow rate changes or noise are prevented.	50 msec
Lock setting	Parameter Lock can be set, which disables changing the parameters of the unit. Data Storage Lock can be set, which prohibits uploading and downloading set values to the master. (Parameter Lock and Data Storage Lock can be set simultaneously)	Not set
Zero adjustment	The zero point deviation is compensated. (within ±10% F.S.)	Not set
Data storage function	Uploading set values to the master and downloading set values from the master are possible. (Can be copied by the same model No.)	–
Reset function	Returns the settings to the factory settings. (Cannot reset while Parameter Lock is enabled)	–
Unit identification function	Models, serial numbers, etc., can be confirmed on the network.	–

Optional products

Discrete option model No. method

FSM3 - **K** - **P70**

Ⓐ Option

Ⓑ Clean-room specifications

Code	Description
Ⓐ Option	
A	5-conductor lead wire 1 m (for LCD display)
B	5-conductor lead wire 3 m (for LCD display)
C	4-conductor lead wire 1 m (for bar display)
D	4-conductor lead wire 3 m (for bar display)
G	M12 both-end lead wire with connector (3 m) (for IO-Link)
H	Bracket 1 (for models with a flow rate range below 200 L/min)
J	Bracket 2 (for models with a flow rate range of 500 L/min or 1000 L/min)
K	Panel mounting kit 1 (for sensor unit models with a flow rate range below 200 L/min)
L	Panel mounting kit 2 (for needle valve integrated models with a flow rate range below 200 L/min)
M	DIN rail mountKit (for models with a flow rate range below 200L/min)
Ⓑ Clean-room specifications	
Blank	No
P70	Anti-dust generation (FSM3-G-P70 cannot be selected.)

Lead wire dimensions

●FSM3-A, B

5-conductor lead wire (for LCD display, for separated display)

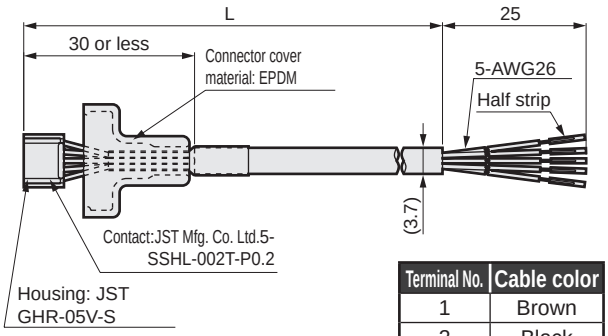

Model No.	L dimensions	Weight g
FSM3-A	1040±20	21
FSM3-B	3040±20	57

Terminal No.	Cable color
1	Brown
2	Black
3	White
4	Gray
5	Blue

Lead wire dimensions

●FSM3-C, D

4-conductor lead wire (for bar display)

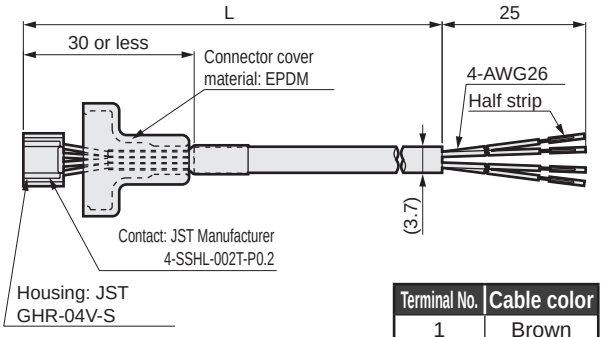

Model No.	L dimensions	Weight g
FSM3-C	1040±20	19
FSM3-D	3040±20	52

Terminal No.	Cable color
1	Brown
2	Black
3	White
4	Blue

●FSM3-G

(M12 both-end lead wire with connector)

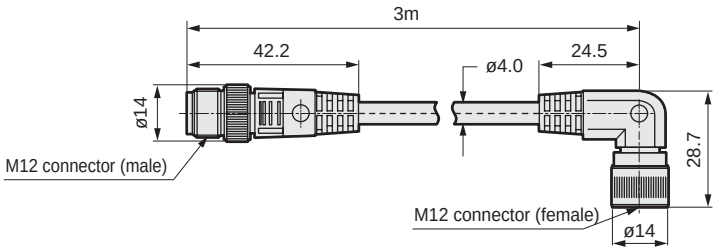

Terminal No.	Cable color
1	Brown
2	White
3	Blue
4	Black

Optional dimensions

●FSM3-M

DIN rail mountingkit

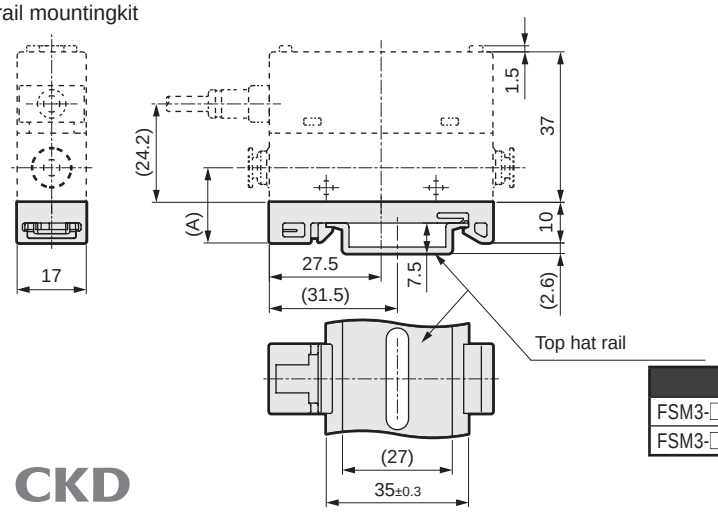

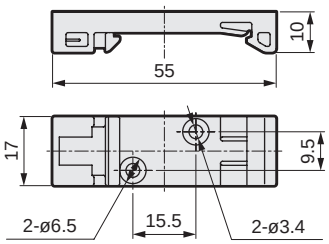

Model No.	Dimension (A)
FSM3-□□□□/BH1/CH1/HH1/AA1/AF1/AB1/AC1/AD1/AE1	18.5
FSM3-□□□□/DH1/EH1/JH1/BA1/BF1/BB1/BC1/BD1/BE1	23.0

Optional dimensions

●FSM3-H

Bracket 1 (for models 200L or less)

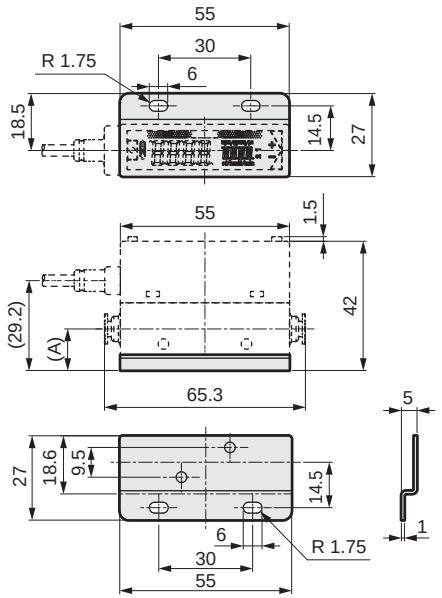

Model No.	Dimension (A)
FSM3-□□□□/BH1/CH1/HH1/AA1/AF1/AB1/AC1/AD1/AE1	13.5
FSM3-□□□□/DH1/EH1/JH1/BA1/BF1/BB1/BC1/BD1/BE1	18.0

●FSM3-J

Bracket 2 (for models 500L or 1000L)

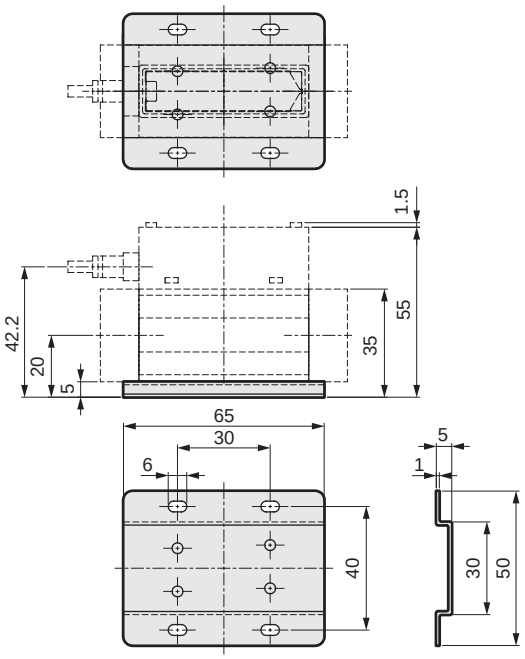

●FSM3-K

Panel mounting kit 1 (for LCD display/separate display)

・ LCD display

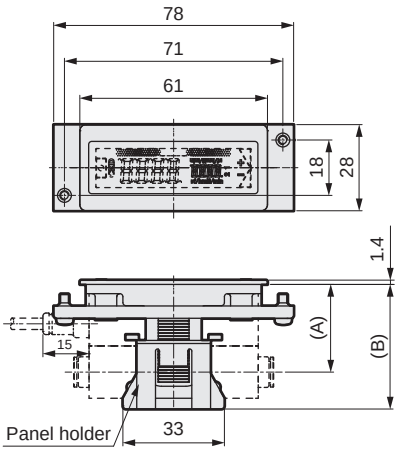

・Separated display

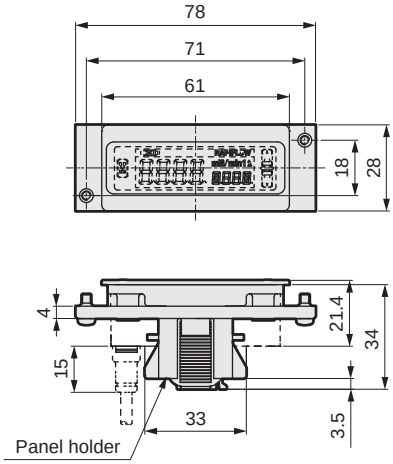

[Panel cut dimension]

In case of single installation

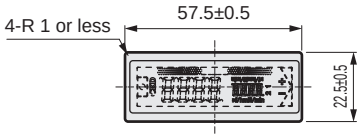

In the case of close mounting

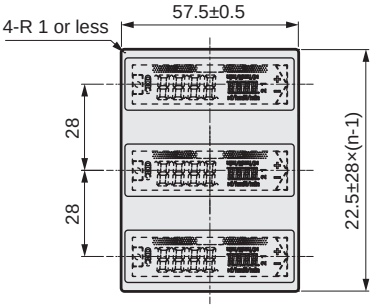

●FSM3-L

Panel mounting kit 2 (for needle valve integrated)

・Integrated needle valve

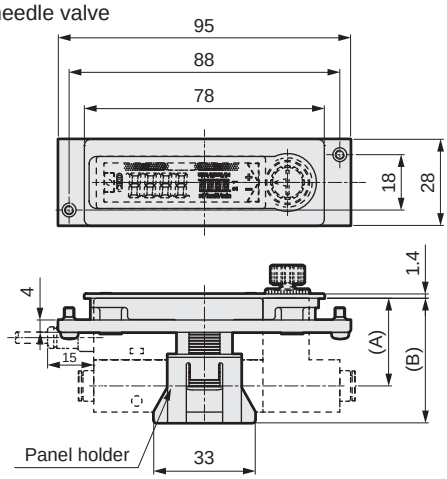

[Panel cut dimension]

In case of single installation

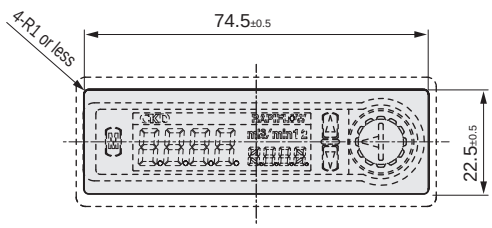

Model No.	Dimension (A)	Dimension (B)
FSM3-□□□□/BH/CH/HH/AA/AF/AB/AC/AD/AE/□□□/N/T	28.5	40.5
FSM3-□□□□/DH/EH/JH/BA/BF/BB/BC/BD/BE/□□□/N/T	30	46.5

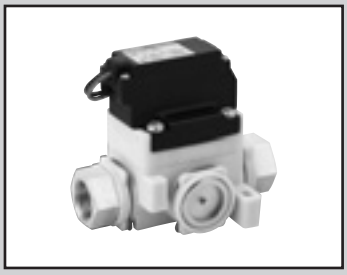

Pilot operated 2-port solenoid valve for compressed air

EXA Series Screw-in connection body

- NC (open when energized)
- Port size: Rc1/4, 3/8

JIS symbol

- NC (open when energized)

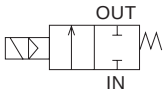

How to order

EXA - 02 - 1 2C - 3

Model No.

Ⓐ Port size

Ⓑ Sealant/pilot operated combination

Ⓒ Coil option

Ⓓ Voltage

Code		Description
Ⓐ Port size		
02		Rc1/4
03		Rc3/8
Ⓑ Sealant/pilot operated combination		
0		H-NBR, internal exhaust specifications
1		H-NBR, external exhaust specifications*1
Ⓒ Coil option *2		
2C	**Standard**	Lead wire (without lamp/surge suppressor)
Ⓓ Voltage *2		
1		100 VAC
3		24 VDC
4		12 VDC

*1: Check the pressure specifications.
*2: Contact CKD for G thread and NPT thread support.

* For the connection method of FSM3, check the FSM3 instruction manual.

[Example of model No.]
EXA-02-12C-3

Ⓐ Port size : Rc1/4
Ⓑ Sealant/pilot operated combination : H-NBR/external exhaust specifications
Ⓒ Coil option : Lead wire (without lamp/surge suppressor)
Ⓓ Voltage : 24 VDC

FSM3 connection dimensions

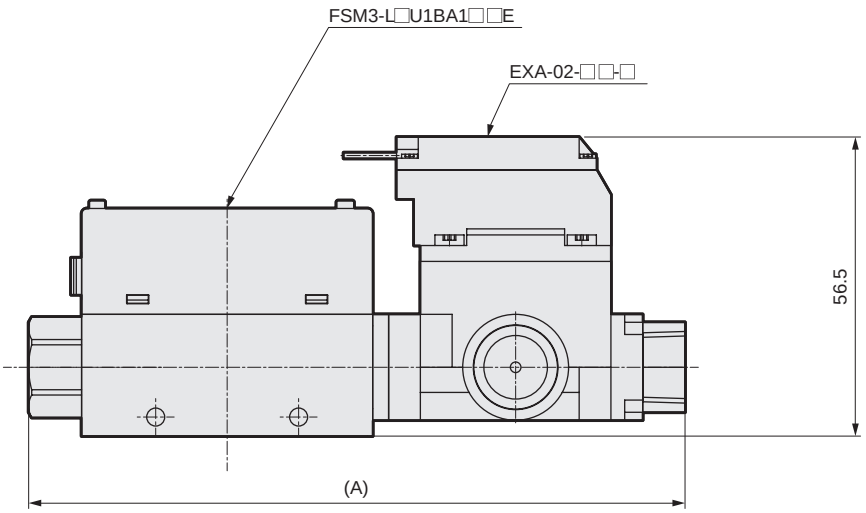

Configuration	Dimension (A)
FSM3+EXA-02	124
FSM3+EXA-03	130

Pneumatic components: Warnings and Cautions

Be sure to read this section before use.
For general precautions for pneumatic components, refer to Intro Page 63.

Product-specific cautions: Compact flow rate sensor FSM3 Series

Design/selection

Working fluids

DANGER

■ Never use with a flammable fluid

WARNING

■ This product cannot be used as a billing meter. Do not use this product for commercial transactions as it is not compliant with the Measurement Act. Intended applications include industrial sensors.

■ Do not use fluids which are not applicable.

■ Use dry gas which does not contain corrosive elements such as chlorine, sulfur or acids, and which is clean and does not contain dust or oil mist.

■ Depending on the fluid, retaining the fluid for long periods could adversely affect the performance. Do not seal the fluid in the pipe for long periods of time.

■ When using compressed air,use clean air that complies with JIS B 8392-1:2012 Class 1.1.1 to 1.6.2. Since compressed air from the compressor contains drainage (water, oxidized oil, foreign matter, etc.), attach a filter, an air dryer and an oil mist filter (microalescer) to the primary side (upstream) of the sensor. The sensor's mesh rectifies flow in the pipe. It does not filter out foreign matter, so provide a filter.

[Recommended circuit]

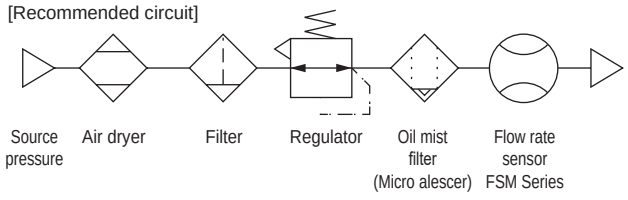

■ Working pressure/flow rate range
Applications exceeding the max. working pressure and specified flow rate range may result in faults. Use this product only within the specified range. If energized in a vacuum state of -0.09 MPa or less, the sensor's heat dissipation will suffer, leading to degradation of the sensor.

■ When using a valve on the primary side of the sensor, use only valves with oil-prohibited specifications. This sensor could malfunction or fail if exposed to splattering grease, oil, etc. As friction powder may be generated depending on the valve, mount a filter to prevent the powder from entering the sensor.

■ The sensor for oxygen gas is a custom model. To prevent ignition accidents, treat the inside of the flow paths on oxygen models in accordance with oil-prohibited specifications. Do not allow oxygen gas to flow again when a fluid other than oxygen has flowed even once.

■ When using with liquefied gases such as carbon dioxide, always vaporize the gas.Failure may result if liquefied gas enters the product.

Working environment

DANGER

■ Explosion-proof environments
Never use this product in an explosive gas atmosphere. The structure is not explosion-proof, and explosions or fires could occur.

WARNING

■ Corrosive environments
Do not use this product in an atmosphere containing corrosive gases such as sulfur dioxide.

■ Ambient/fluid temperatures
Use ambient/fluid temperatures from 0 to 50°C within the specified range.
Even if the temperature is within the specified range, do not use this product if the ambient temperature and fluid temperature could suddenly change and cause dew to condense.

■ Drip-proof environments
The degree of protection of this product is equivalent to IP40. Do not install this product where water, salt, dust, or swarf is present or in a pressurized or depressurized environment. The product cannot be used with large temperature variations or high temperature/ humidity since condensation may occur inside the body.

Flow rate unit

⚠ CAUTION

■ This product's flow rate is measured at a mass flow rate unaffected by temperature or pressure. The unit is L/min, but this is the display when the mass flow rate is converted to volumetric flow rate at 20°C 1 atmosphere (101 kPa) relative humidity 65%RH. (Conditions for gas types other than air are 20 °C, 1 barometric pressure (101 kPa), relative humidity 0%RH)

Overflow

⚠ CAUTION

■ With each series, the sensor can handle an overflow double the measured range. If dynamic pressure is applied near the maximum working pressure (when a pressure difference exceeding the max. working pressure is applied between primary and secondary sides), the sensor may operate abnormally. If dynamic pressure is applied, such as when a workpiece is filled for leakage inspection, provide a bypass circuit or restrictor so that dynamic pressure is not applied to the sensor.

Integrated needle valve

⚠ CAUTION

■ This valve cannot be used as a stop valve that requires no leakage. Slight leakage is allowed for in the product specifications.

■ The needle valve does not change linearly according to the rotation speed, so be sure to use it as fixed restriction.

Use for suction confirmation, etc.

⚠ CAUTION

■ Mount an air filter upstream from suction in compliance with the working status to prevent the entry of foreign matter.

■ Consider the atmospheric dew point and the product's ambient temperature, and use the product under conditions in which dew does not condense in pipes.

■ When this product is used for vacuum applications such as air supply, do not bend the tube near the push-in fitting. If stress is applied to the tube near the push-in fitting, insert an insert ring into the tube, and connect the tube to the push-in fitting.

■ Select the flow rate range based on the operating vacuum pressure and suction nozzle.

■ Response speed may be delayed by the piping volume between the suction nozzle and this product. In this case, take countermeasures to reduce piping capacity.

■ When the suction confirmation sensor is switched from a pressure sensor (switch) to a flow rate sensor (switch), sensor output (switch output) logic will be reversed (refer to the figure below). Note that the PLC sequence program must be changed or revised. If source pressure or vacuum source is not supplied when equipment power is turned ON, "flow rate 0" = "sensor output (switch output) ON" status is set at the flow rate sensor (switch). Check that this is not a problem with the PLC sequence program, etc

	Pressure sensor (Switch)	Flow rate sensor (Switch)
Suction confirmation	ON at setting value or more	ON at setting value or less
	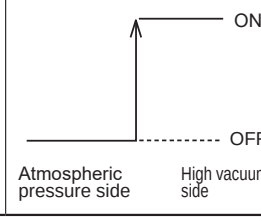	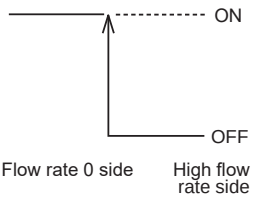

Other

⚠ CAUTION

■ The flow path is not completely free of dust generation. A final clean filter should be used in circuits where dust generation could be a problem.

■ If the actual flow rate is fluctuating, the measured flow rate value also fluctuates. Either increase the FSM3 display cycle or response time, or average the analog output on the device. In particular, note that control valves such as solenoid valves can be easily generated when used near a circuit or pump that opens and closes quickly and frequently.

■ Measuring the pulsating flow rate may cause errors in the measured flow rate. Restrict the flow rate with the fixed orifice and needle valve, etc., and use it in a laminar flow state (normal flow that does not involve irregular fluctuations).

■ The flow rate measured with the gas type switching function is a reference value calculated inside the product based on the converted value. Accuracy other than the air mode is a guideline.

Mounting/Installation/During adjustment

Piping

⚠ CAUTION

- Always attach the pipes before starting wiring.
- Align the fluid flow direction to the direction indicated on the body when connecting the pipes.
- Do not install the regulator/solenoid valve, etc., immediately before this product. Generated drift may cause errors. Provide a straight pipe with approx. 10 times the bore size when necessary.
- Before installing piping, clean out the pipes using air blower to remove all foreign matter and cutting chips from the pipes.The rectifier or sensor chip could be damaged if a large amount of foreign matter, cutting chips, etc., enters.
- Check that sealing tape or adhesive does not get inside during piping.
  * When using for clean-room specifications, make sure that the sealant material matches the system being used.

When winding fluoro resin sealing tape around threads, wind sealing tape once or twice, leaving two to three threads open at the end of the screw. Press tape with your fingernail tip to stick it onto threads. When using liquid sealant, leave one to two threads open from the end, and avoid applying too much. Check that the sealant does not get on device threads.

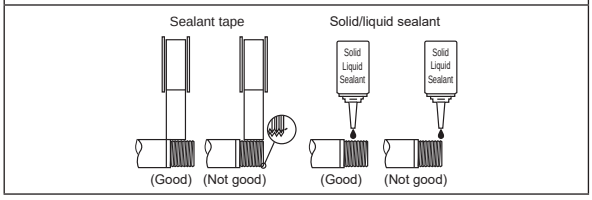

- The resin body screw-in fittings of this product are compliant with push-in fittings for pneumatic pressure. Do not use this product for pneumatic pressure circuits with steel pipe connections. If this product is used for steel pipe connection, the misalignment of the IN side steel pipe bore and OUT side steel pipe bore will cause excessive force to be applied to the body, as well as external leakage, risking damage to the product.
- Attach a wrench to metal sections when tightening pipes so that force is not applied to the resin section.

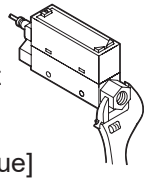

- Refer to the torque below so as not to apply excessive screw-in torque or load torque to the connection port.

[Reference value]

Port thread	Tightening torque N·m
Rc1/8 (G1/8)	**3 to 5**
Rc1/4	**6 to 8**
Rc1/2	**16 to 18**

- When using a push-in fitting, accurately insert the tube and confirm that it does not become dislocated even when pulled. Cut the tube at a right angle with a dedicated cutter before use.
- Connect a fitting even when using the metal body with the out side opened. The port filter could come off.
- Make sure that the leakage detection solution does not enter the inside of this product when inspecting the pipe for leaks.
- Do not rotate fittings while fluid pressure is still applied to this product. The sealant parts could seize or wear, possibly resulting in external leakage.
- The resin body elbow fitting or screw-in fitting (1/8, 1/4) can be rotated about 10 times. However, as it cannot be rotated further or constantly, do not rotate it more than necessary. Rotating the sealant more than necessary may cause the sealant to bite or wear, resulting in external leakage.

Mounting

⚠ CAUTION

- The LCD display type flow rate meter uses a liquid crystal display. This may be difficult to read depending on the angle.
- Do not install multiple product bodies in close contact. The generation of heat on each part could cause the product's temperature to rise, hastening changes in characteristics or deterioration of the resin material. When using the products in a row, set intervals of distance of 10 mm and over.
- Although the mounting is "unrestricted in vertical/horizontal direction", the flow rate may vary depending on difference in the mounting orientation or piping conditions.

Lateral mounting (use of through hole)

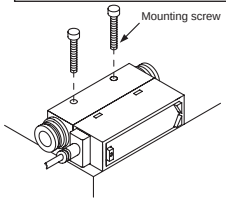

Tighten the mounting screw with a tightening torque of 0.5 N·m.

Vertical mounting (use of female thread on bottom surface)

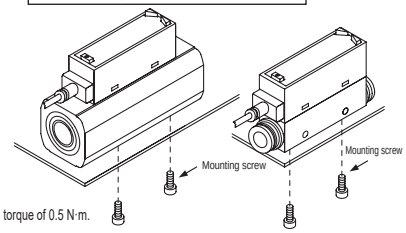

Bracket mounting (use of dedicated bracket)

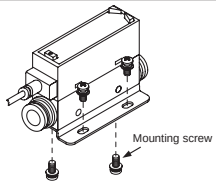

For FSM3-□005 to 201
Discrete bracket model No.: FSM3-B1

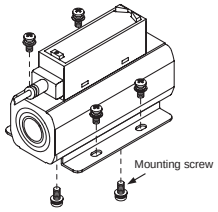

For FSM3-□501 and 102
Discrete bracket model No.: FSM3-B2

Tighten the mounting screw with a tightening torque of 0.5 N·m.

Panel mounting

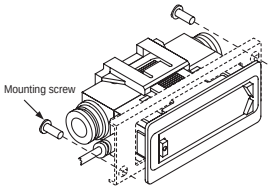

DIN rail mount

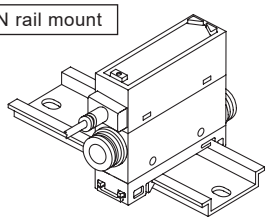

Tighten the mounting screw with a tightening torque of 0.06 N·m.
Complete the piping before assembly. If the pipes are connected after assembly, excessive stress will be applied and may damage the product. When using the panel mounting method, make sure that vibration is not applied to the product. When using on a stainless steel body, the vibration will be amplified and could damage the product.

- Note that if you mount the elbow fitting in a downward position, it may interfere with the DIN rail mounting.
- Note that the bracket mounting position may interfere with the elbow fitting.

Wiring

⚠ DANGER

■Use power supply voltage and output within the specified voltage. If voltage exceeding the specified voltage is applied, the sensor could malfunction or be damaged, or electrical shock or fire could occur. Do not use any load that exceeds the rated output. Otherwise, output may result in damage or fire.

■Stop the controls and machine devices and turn power OFF before wiring. Starting operation suddenly could cause unpredictable and dangerous operation. Conduct an energized test with controls and machine devices stopped, and set target switch data. Be sure to discharge any accumulated electrostatic charge among personnel, tools, or equipment before and during work. Connect and wire bending resistant material, such as robot wire material for movable sections.

⚠ WARNING

■Install the product and wiring as far away as possible from sources of noise such as power distribution wires. Provide separate countermeasures for surge applied to the power cable. The display or output could fluctuate.

■Do not short-circuit the load. Failure to observe this could result in rupture or burning.

■The output impedance of the analog output section is approx. 1 kΩ. If the impedance of the connecting load is small, output error increases. Check error with the impedance of the connecting load before using. (The analog/current output type is excluded.)

Example of calculation

(FSM3-voltage output impedance: Ro=1kΩ
Load internal impedance: Rx = 1 MΩ

$$\text{Output value} = \left(1 - \frac{Ro}{Ro+Rx}\right) \times 100\%$$

$$= \left(1 - \frac{1\ k\Omega}{1\ k\Omega+1M\Omega}\right) \times 100\%$$

Output value error ⇨approx. 0.1%

■Ensure that wires are properly insulated.
Check that wires do not come into contact with other circuits, that no ground faults occur, and that the insulator between terminals is not defective. Overcurrent could flow in and damage the sensor.

■Check line color when wiring. As incorrect wiring could result in sensor damage and malfunctions, check wire color against the instruction manual before wiring.

■Use a DC stabilized power supply within the specified rating, insulated from the AC power supply. insulatedA non-supplied power supply could result in electrical shock. If power is not stabilized, the peak value could be exceeded. This could damage the product or impair accuracy.

■The power supply for the metal body (stainless steel body) type is a DC stabilized power supply completely isolated from the AC primary side. Connect either the + side or - side of the power to the FG. Between the metal body internal power circuit and metal body, a varistor (limit voltage approx. 40 V) is connected to prevent dielectric breakdown of the sensor. Do not conduct a withstand voltage test or insulation resistance test between the internal power circuit and metal body. Disconnect wiring first if this testing is required. An excessive potential difference between power and metal body will burn internal parts. After installing, connecting and wiring the metal body, electrical welding of the equipment/frame or short-circuit accidents, etc., could cause welding current, excessive high voltage caused by welding, or surge voltage, etc., to run through the wiring, ground wire, or fluid path connected between such devices, damaging wires or devices. Conduct any work such as electrical welding after removing this device and disconnecting all electric wires connected to the F.G.

■Do not use this product at levels exceeding the power supply voltage. If voltage exceeding this range or AC power is applied, the controller could rupture or burn.

■Check that stress (7 N and over) is not directly applied to lead wire leadouts or connectors.

■For the LCD and bar displays, be sure to mount a connector bar after connecting the connector.

- L type cable connectors do not rotate. Do not rotate this valve.
- Be sure to disconnect the power supply before inserting/removing M12 connectors.
- Always hold the connector part when inserting/removing M12 connectors. Do not hold by the cable to pull out.
- When fitting the M12 connector, align the protrusions on the main unit connector terminal with the recesses on the cable connector terminal and insert them securely, then hold the knurled part and tighten it clockwise to avoid damaging the threads.
- Take care, as screwing the M12 connector in with excessive force may lead to damage of the body side connector.
  Recommended torque: 0.4 to 0.49N·m
- If extending the M12 connector cable, use wiring length of 20 m or less between the master and device (this product).

During adjustment

⚠ CAUTION

■ If switches are operated when fluid is pulsating or flow rate is otherwise unstable, operation may be unstable. In this case, provide sufficient margin between the two setting values and avoid setting switches in an unstable area. Confirm that switch operation is stable before use.

Integrated needle valve

⚠ CAUTION

■Do not turn the knob forcibly when fully closing or opening it (0.05 N·m or less). Do not use the lock nut to adjust the needle. Otherwise this could cause needle galling or damage.

■The set flow rate may be unstable if turning the dial of the needle valve forcibly when fully closing. Do not overly tighten the dial.

Use/maintenance

⚠ WARNING

■ Working conditions for CE compliance
This product is CE-marked, indicating conformity with the EMC Directives. The standard for the immunity for industrial environments applied to this product is EN61000-6-2; the following requirements must be satisfied in order to conform to this standard:
Conditions
- The evaluation of this product is performed by using a lead wire that has a power supply line and a signal line paired to assess the product's performance.
- This product is not equipped with surge protection. Implement surge protection measures on the system side.

■ Do not disassemble or modify, as this may cause malfunction.

■ Output accuracy is affected by temperature characteristics and heat generated when energized. Provide a standby time (5 minutes or more) after turning the power ON for use.

■ Immediately after power is turned ON, this product does not start flow rate detection switch operation for approx. 5 seconds to complete self-diagnosis. Provide a control circuit/program that ignores signals for at approximately five seconds after power is turned ON.

⚠ CAUTION

■ If a problem occurs during operation, immediately turn the power OFF, stop use, and contact your dealer.

■ This product uses a micro-sensor chip, and must be installed where it will not be subject to dropping, impact or vibration. Handle this product as a precision component during installation and transportation.

■ Keep this product's flow rate within the rated flow range.

■ Use this product within the working pressure.

■ Do not turn the product's fitting while the fluid pressure is on, since it may cause external leakage. Also, avoid use that may cause the fitting to rotate during operation.

■ When changing the output set value, turn OFF the equipment first in order to prevent unexpected operation in the control system equipment.

■ Analog output continues even if the flow rate range is exceeded. With the LCD display, "Hi" or "Lo" will be displayed. With the bar display, the bar display will blink. Note that this is outside the guaranteed precision.

■ The accuracy may vary from the initial status depending on the working environment or working conditions.It is recommended to check the operation of the product periodically.

■ The sensor chip will degrade when used for long periods and cause the detected flow rate to fluctuate. Periodically inspect the sensor chip.

■ Replace the working gas in the flow paths before changing the gas type.

■ Pay attention to the reverse current caused by disconnected wires/wiring resistance. If other devices, including a flow rate sensor, are connected to the same power supply as the flow rate sensor, and the switch output wire and power cable negative (-) side are short-circuited to check the operation of the control panel input unit, or if the power cable negative (-) side is disconnected, reverse current could flow to the flow rate sensor's switch output circuit and cause damage.

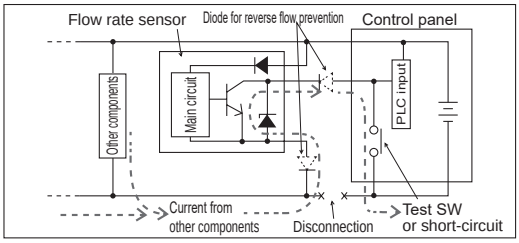

■ Take the following measures to prevent damage caused by reverse current

(1) Avoid centralizing current at the power cable, especially the minus side power cable, and use as thick a cable as possible.

(2) Limit the number of devices connected to the same power source as the flow rate sensor.

(3) Insert a diode parallel to the flow rate sensor's output line to prevent reverse current.

(4) Insert a diode parallel to the flow rate sensor power wire's negative (-) side to prevent reverse current.

■ Pay attention to surge current flow-around.
When flow rate sensor power is shared with an inductive load that generates surges, such as a solenoid valve or relay, if the circuit is cut off while the inductive load is functioning, surge current could enter the switch output circuit and cause damage depending on where the surge absorbing element is installed.

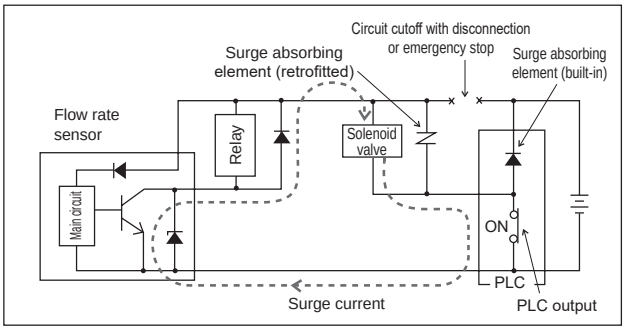

Take the measures below to prevent damage from sneak surge current.

(1) Separate the power supply for output including the inductive load, such as the solenoid valve and relay, and input, such as the flow rate sensor.

(2) If a separate power supply cannot be used, directly install a surge absorption element for all inductive loads. Consider that the surge absorption element connected to the PLC, etc., protects only the individual device.

(3) Connect a surge absorption element to places on the power wiring shown in the figure below, as a measure against disconnections in unspecified areas.

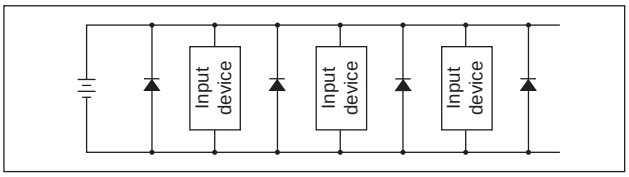

When the devices are connected to a connector, the output circuit could be damaged by the above phenomenon if the connector is disconnected while the power is ON. Turn power OFF before connecting or disconnecting the connector.

■When using the LCD display type, do not press down on the display section. This may lead to failure.

■The case is made of resin. Do not use solvent, alcohol or detergent in cleaning, since the resin could absorb it. There is a risk of affecting the resin. Wipe off dirt with a rag soaked in a diluted neutral detergent solution and wrung out well.

Integrated needle valve

⚠ CAUTION

■Vibration may cause the needle to turn and the flow rate to change.

Product-specific cautions: Separated display FSM2-D Series

Design/selection

⚠ CAUTION

- The corresponding sensor is the voltage output (1-5 V) type. If the current output type or other voltage output type is connected, it will not operate properly. When using FSM3, use the bar display voltage output.
- It does not have the function to detect signal interruption due to cable disconnection or the state of connection with the sensor. The customer must prepare separately when detection is required.

Mounting, installation and adjustment

⚠ CAUTION

- Cut the half stop section at the end of the e-con connector wiring before using. Insert the wire through to the back of the connector, and securely crimp with pliers, etc.
  The wire sheath does not need to be removed.
  Check that the pin No. and wire color are correct before crimping. Incorrect wiring can lead to sensor or separated display damage, faults or malfunction.
  The flow rate is displayed when energized with the separated display Discrete. This is not an abnormality.

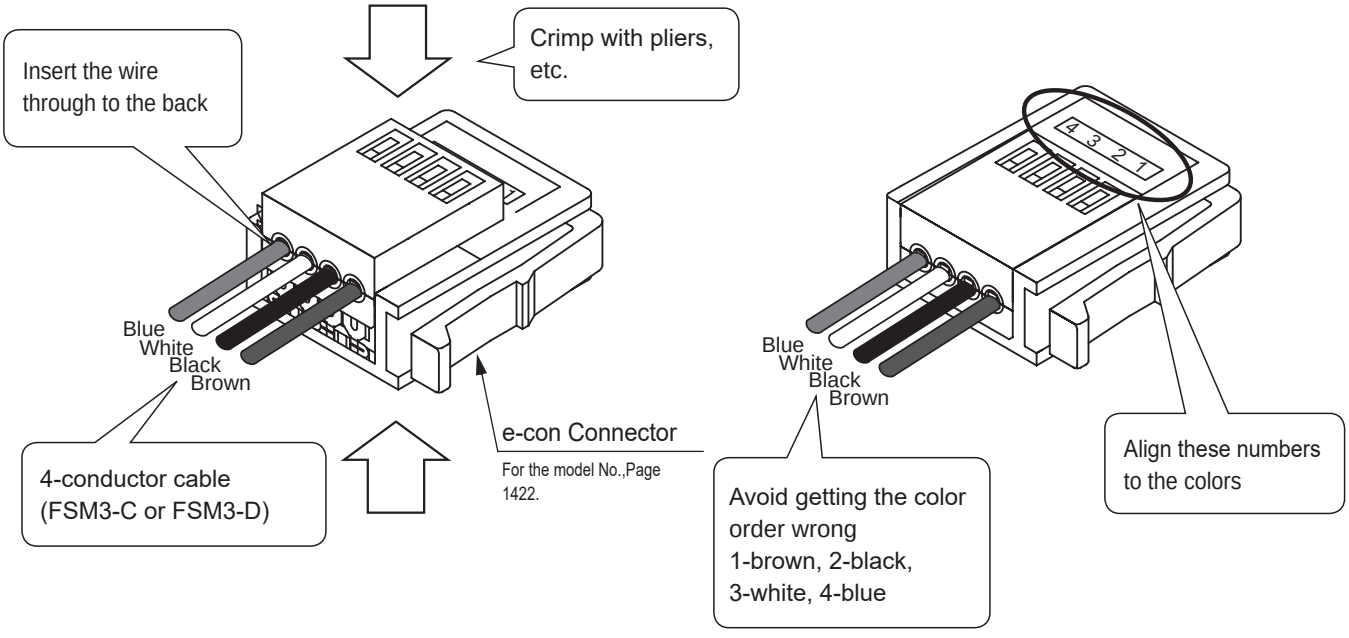

* The e-con connector is attached with the separated display.

- When attaching or removing the lead wire, hold the connector instead of the cable. Holding the cable could result in a contact fault, broken wire, short-circuit, etc., could damage the sensor or separated display, or cause malfunctions.
- Do not apply a load of 15 N or over on the lead wire.

Miniature flow rate sensor

FSM (RAPIFLOW)

■ **Sensors/controller/flow rate sensor**

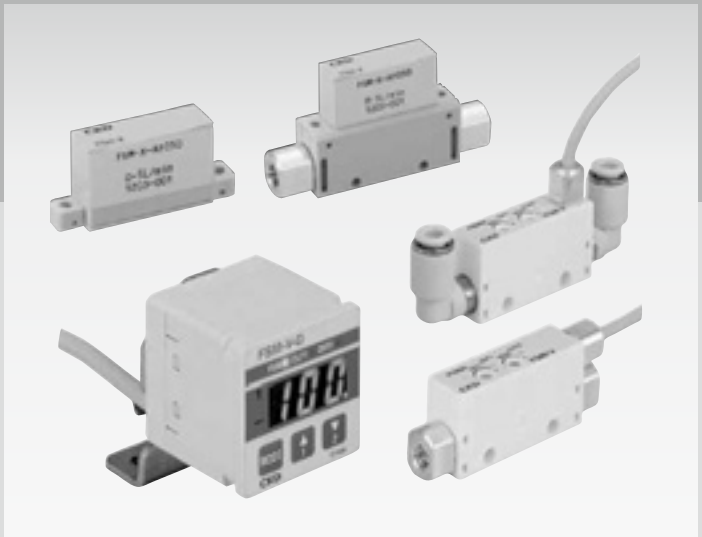

CONTENTS

Product introduction	1452
● Miniature analog output (FSM-X)	1454
● Miniature analog output/switch output (FSM-V)	1460
● FSM Series dedicated inline filter	1482
FSM-V Technical data	1470
All FSM series common technical data	1478
Customized products	1476
⚠ Safety precautions	1484

Miniature/lightweight & high response.

Demonstrates its power in confirmation of suction/release for electronic parts, etc.

Functions focus on equipment integration to create a more compact and lighter system.
Mounting at the end of the moving part adjacent to the measuring section is made possible, contributing to improved responsivity as a system.
Determination of the flow direction relating to normal-reverse inverted flow due to positive/ negative pressure operation is also possible, and the wide flow rate range provides high added-value functions across a range of fields.

Miniature/lightweight/high-speed response
Flow rate switch

FSM-X Series

Compact body enabled by separating the sensor head.
Reduced volume by 52% compared to conventional products, light weight of 4 g and ultra-thin 8 mm are realized.

Flow rate range
±0.5, ±1, ±5, ±10, 0.5, 1, 5, 10 L/min

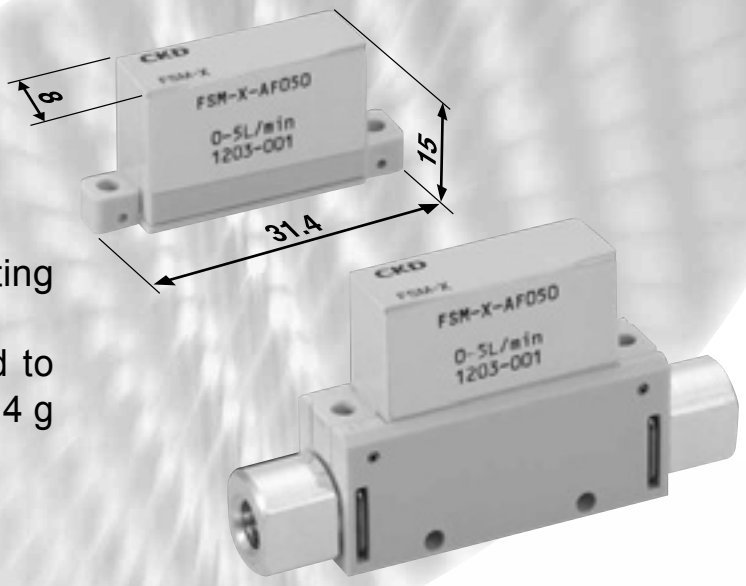

Miniature/ultra-high-speed response
flow rate sensor

FSM-V Series

Astonishing compact size and 5 ms high-speed response, beyond all reasonable expectations, have made possible a design once abandoned.

Flow rate range
±0.05, ±0.1, ±0.5, ±1, ±5, ±10 L/min

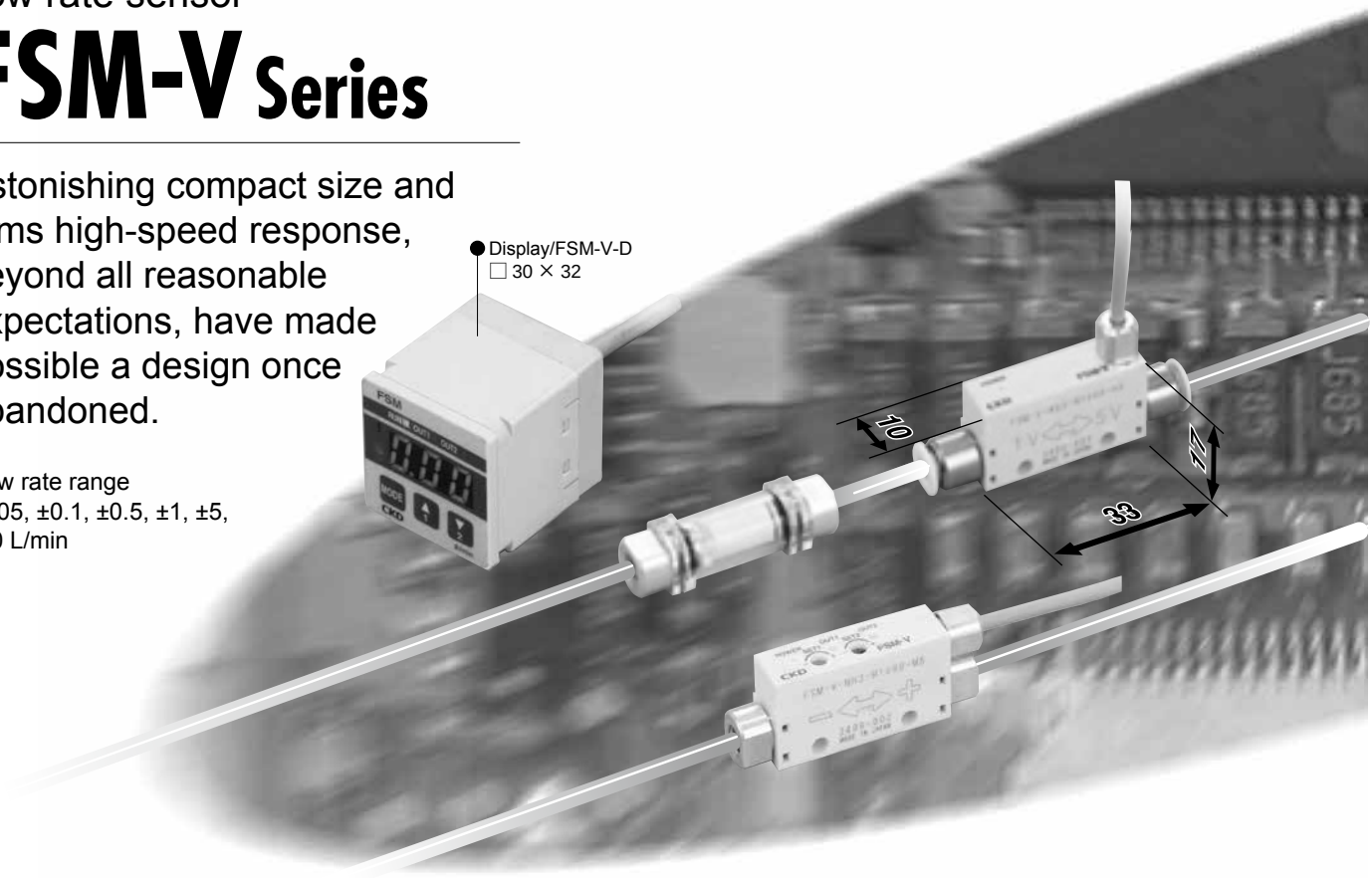

RAPIFLOW Series variation

Miniature/ultra-high-speed response FSM-X Series											Miniature/ultra-high-speed response FSM-V Series					
FSM-X-AF005	FSM-X-AF010	FSM-X-AF050	FSM-X-AF100	FSM-X-AR005	FSM-X-AR010	FSM-X-AR050	FSM-X-AR100	Analog output 1 point Discrete sensor head 	Analog output	Analog output 1 point Separated display mountable (sold separately) 	FSM-V-A-R0005	FSM-V-A-R0010	FSM-V-A-R0050	FSM-V-A-R0100	FSM-V-A-R0500	FSM-V-A-R1000
FSM-X-AF005*	FSM-X-AF010*	FSM-X-AF050*	FSM-X-AF100*	FSM-X-AR005*	FSM-X-AR010*	FSM-X-AR050*	FSM-X-AR100*	Analog output 1 point Flow path block 	Switch output	NPN output 2 points 	FSM-V-N-R0005	FSM-V-N-R0010	FSM-V-N-R0050	FSM-V-N-R0100	FSM-V-N-R0500	FSM-V-N-R1000
										PNP output 2 points 	FSM-V-P-R0005	FSM-V-P-R0010	FSM-V-P-R0050	FSM-V-P-R0100	FSM-V-P-R0500	FSM-V-P-R1000
Body material																
●	●	●	●	●	●	●	●	Resin body			●	●	●	●	●	●
								Stainless steel body								
								Aluminum body								
Port size																
●	●	●	●	●	●	●	●	Single sensor head (without fitting)								
								ø1.8 fiber tube			●	●	●	●	●	●
●	●	●	●	●	●	●	●	ø4 Push-in			●	●	●	●	●	●
								ø6 Push-in								
●	●	●	●	●	●	●	●	M5			●	●	●	●	●	●
								Rc 1/8								
								Rc 1/4								
								G 1/8								
Full scale flow rate																
								5 mL/min								
								10								
								50			●					
								100				●				
●				●				500					●			
	●				●			1 L/min						●		
		●				●		5							●	
			●				●	10								●
								20								
								50								
								100								
Non-linear								Accuracy (linearity) % F.S.			±5%					
Negative pressure Positive pressure -0.09 +0.2								Working pressure range MPa Negative pressure Positive pressure			Negative pressure Positive pressure -0.09 0.2					
0 to +FULL 5 V 1 V 0 FULL flow rate				-FULL to +FULL 5 V 3 V 1 V -FULL flow rate FULL flow rate				Analog output (1 to 5 V)			5 V 3 V 1 V -FULL 0 +FULL					

*1: Applicable only for AR type.

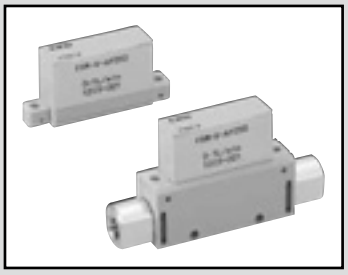

Miniature flow rate switch
RAPIFLOW

FSM-X Series (for air/nitrogen gas)

● Flow rate range: ±0.5, ±1, ±5, ±10, 0 to 0.5, 0 to 1, 0 to 5, 0 to 10 L/min

Specifications

1 MPa = 10 bar

Model No.		Analog output							
Item		FSM-X-AR005	FSM-X-AR010	FSM-X-AR050	FSM-X-AR100	FSM-X-AF005	FSM-X-AF010	FSM-X-AF050	FSM-X-AF100
Flow rate range (L/min) (*1)		-0.5 to +0.5	-1 to +1	-5 to +5	-10 to +10	0 to 0.5	0 to 1	0 to 5	0 to 10
Working conditions	Applicable fluids (*2)	Clean air (JIS B 8392-1: 2012 (ISO 8573-1: 2010) [1: 1: 1 to 1: 6: 2]), nitrogen							
	Max. working pressure MPa	0.2 (≈29 psi, 2 bar)							
	Min. working pressure MPa	-0.09 (≈-13 psi, -0.9 bar)							
	Proof pressure MPa	0.3 (≈44 psi, 3 bar)							
	Ambient temperature/humidity °C	0 (32°F) to 50 (122°F), 80% RH or less							
	Working fluid temperature °C	0 (32°F) to 50 (122°F) (no condensation)							
Storage ambient temperature °C		-20 (-4°F) to 60 (140°F) (no condensation)							
Output		Analog output 1 point (1 to 5 V voltage output, connected load impedance 50 kΩ and over) *3							
Accuracy (*4)	Linearity	Non-linear characteristics							
	Pressure characteristics	Bi-direction: ±5% F.S. or less (-0.09 (≈-13 psi) to 0.2 MPa (≈29 psi), 0.1 MPa (≈15 psi) reference) Uni-direction: ±10% F.S. or less (-0.09 (≈-13 psi) to 0.2 MPa (≈29 psi), 0.1 MPa (≈15 psi) reference)							
	Temperature characteristics	Bi-direction: ±0.3% F.S./°C or less (0 (32°F) to 50°C (122°F), 25°C (77°F) reference) Uni-direction: ±0.6% F.S./°C or less (0 (32°F) to 50°C (122°F), 25°C (77°F) reference)							
	Reproducibility (repeatability) (*5)	±2% F.S. or less							
Response time (*6)		5 ms or less (8 ms or less for 10 L/min)							
External leakage (*7)		1 mL/min or less (single sensor head), 2 mL/min (with flow path block)							
Current consumption (*8)		30 mA or less							
Power supply voltage		24 VDC (21.6 to 26.4 VDC) ripple rate 1% or less							
Power supply voltage fluctuation		±2% F.S. or less (21.6 to 26.4 V)							
Lead wire		ø2.9 mm 3-conductor (ø0.38 mm insulator outer diameter ø0.8 mm)							
Connector	Product side	SM03B-SRSS-TB (JST Mfg. Co. Ltd.), without lock mechanism							
Compatible connector	Housing	SHR-03V-S (JST Mfg. Co. Ltd.)							
	Connector pin	SSH-003T-P0.2-H (JST Mfg. Co. Ltd.)							
Mounting	Mounting orientation	Unrestricted in vertical/horizontal direction							
	Straight piping section	Not required							
Vibration resistance		10 to 150 Hz, compound amplitude 1.5 mm, max. 10 G, 2 hours per X, Y, Z direction							
EMC Directive		EN61000-6-4,EN61000-6-2							
Weight g	Blank	Approx. 4 (cable not included)							
	H04	Approx. 17 (cable not included)							
	M05	Approx. 17 (cable not included)							

*1: The value converted to volumetric flow rate 20°C 1 barometric pressure (101 kPa) relative humidity 65%.
*2: Use air which does not contain corrosive elements such as chlorine, sulfur or acids.
When using compressed air, use clean air that complies with JIS B 8392-1: 2012 (ISO 8573-1: 2010) Class [1: 1: 1 to 1: 6: 2].
Compressed air from the compressor contains drainage (water, oil oxides, foreign matter, etc.). To maintain the function of this product, install a filter, air dryer, and oil mist filter on the primary side (upstream side) of this product.
When using this product to confirm suction, be sure to install an air filter between the suction nozzle and this product to prevent intake of foreign matter.

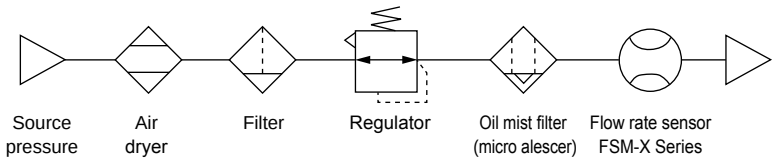

*3: The flow rate output of this product does not indicate the absolute value of the flow rate.
* Connecting load
The output impedance of the analog output section is 1 kΩ . If the impedance of the connecting load is small, output error increases. Check error with the impedance of the connecting load before using.
■ Example of calculation
· Output impedance of FSM-X Ro = 1kΩ
· Load internal impedance Rx = 1 MΩ
· Output value = (1 - Ro/[Ro + Rx]) x 100% = (1 - [1 kΩ/[1 kΩ + 1 MΩ]) x 100%
⇒ Output value error = approx. 0.1%
* Wiring resistance
The voltage used for this product is the voltage at the connector. When using the optional cable (FSM-X-C33), note that the voltage varies due to the cable wiring resistance (0.23 Ω/m or less).
■ Example of calculation
· Wiring resistance of optional cable (FSM-X-C33) (3 m): 0.23 Ω/m x 3 m = 0.69 Ω
· Voltage generated between power supply and wire = Current consumption of product (=30 mA) x Wiring resistance 0.69 Ω = approx. 0.02 V
· Output value error = 0.02 V/4 V (full scale) = 0.5% F.S.
*4: Calibrate the sensor using uni-direction analog output of 1 to 5 V and bi-direction analog output of 3 to 5 V.
Accuracy conditions: Temperature 25±3˚C, power supply voltage 24±0.01 VDC
F.S. is defined as analog output 1 to 5 V.
*5: The average value of data taken for 20 seconds at interval of 0.5 ms when flow rate is ON is determined as a measurement value for 1 time, and the repeatability is determined by 10 continuous ON/OFF times of the flow rate.
Change over time is not included.
*6: The time required for the output to reach 80% of the full scale of flow rate after the flow is detected. The response time varies depending on the piping conditions.
*7: The value obtained when an internal pressure of 0.2 MPa is applied in an environment of 25°C±3°C. It is an initial value, not including change over time.
*8: Current for when 24 VDC is connected, and no load is connected. Note that the current consumption may vary depending on how the load is connected.

How to order

● Body

FSM-X - A F 005 - H04 - 3

Model No.

Ⓐ Output

Ⓑ Flow direction

Ⓒ Flow rate

Ⓓ Fitting

Ⓔ Cable

Code	Description
Ⓐ Output	
A	Analog output
Ⓑ Flow direction	
F	Uni-direction
R	Bi-direction
Ⓒ Flow rate	
005	Full scale: 0.5 L/min
010	Full scale: 1 L/min
050	Full scale: 5 L/min
100	Full scale: 10 L/min
Ⓓ Fitting	
Blank	Single sensor head (without fitting)
H04	With flow path block (ø4 mm push-in fitting)
M05	With flow path block (M5)
Ⓔ Cable	
Blank	Without cable
3	Cable with connector (3-conductor, 3 m)

● Options

FSM-X - C33

Cable	
C33	Cable with connector (3-conductor, 3 m)

Dimensions CAD

● Discrete sensor head

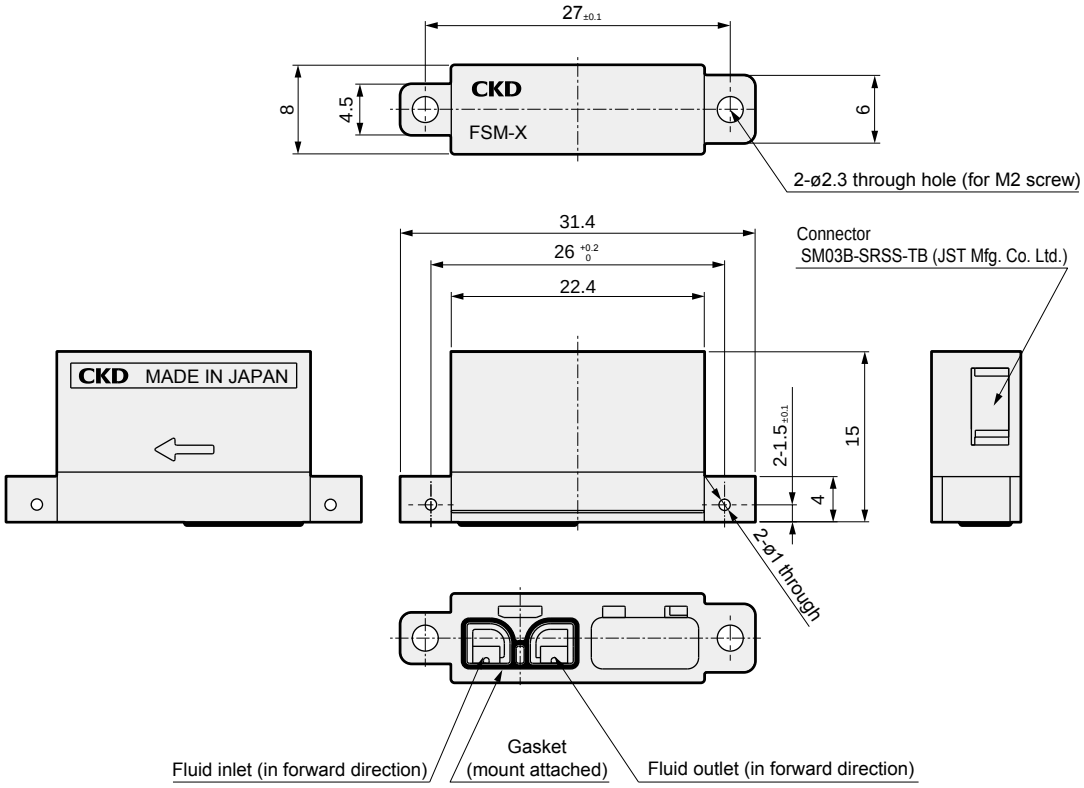

● With flow path block

· With ø4 push-in fitting

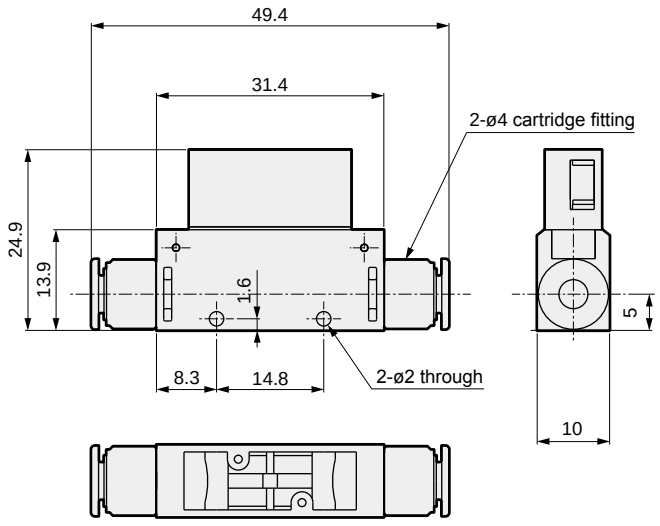

· With M5

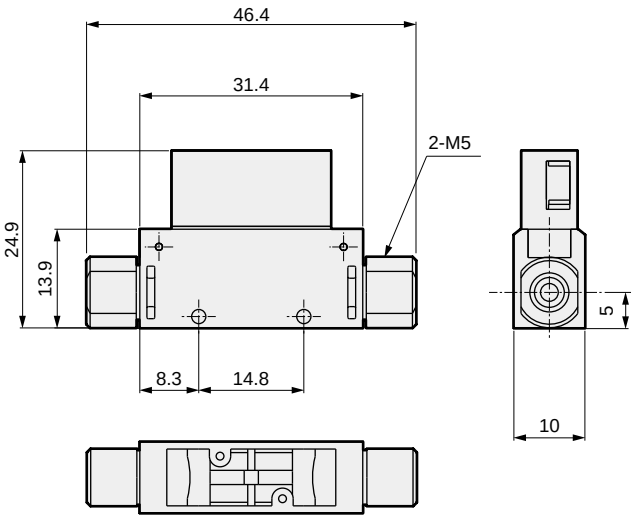

● Optional cable

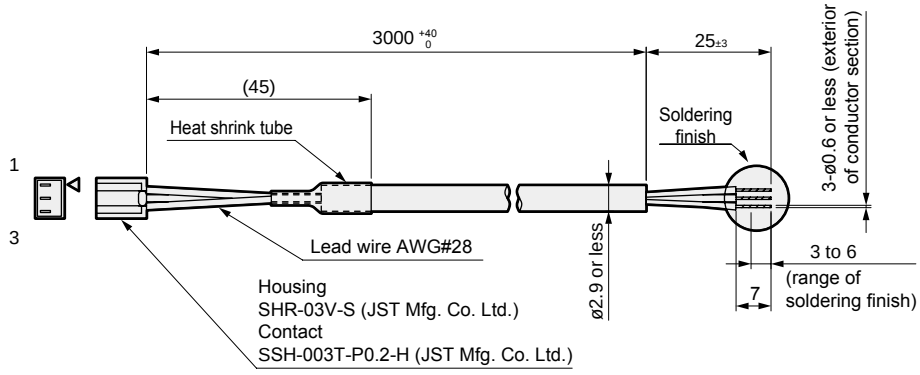

Pin No.	Line	Type of signal
1	Brown	Power supply + 24 VDC
2	Blue	Power supply - GND
3	Black	Analog output (1 to 5 V)

Analog output characteristics (reference value)

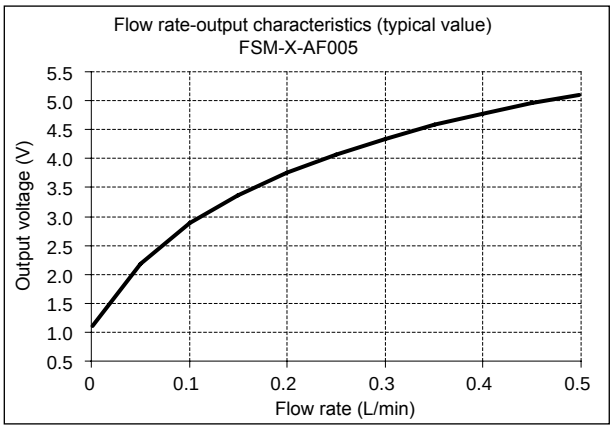

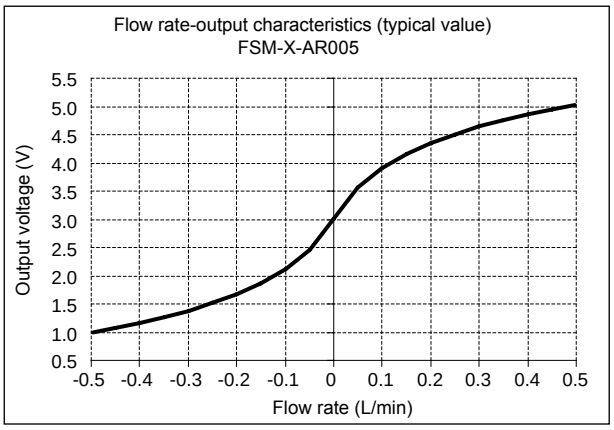

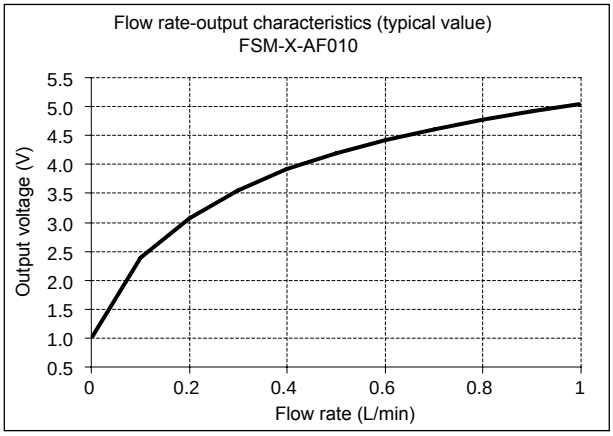

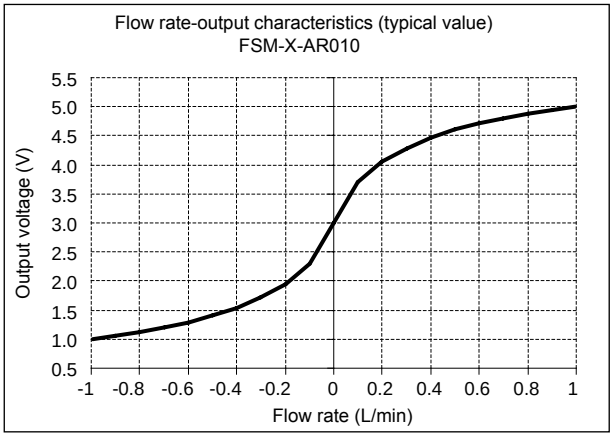

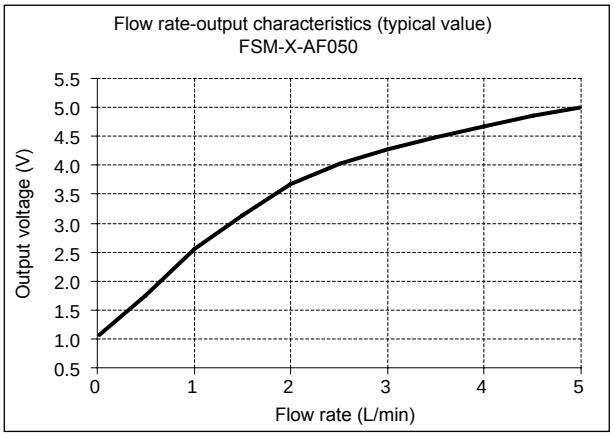

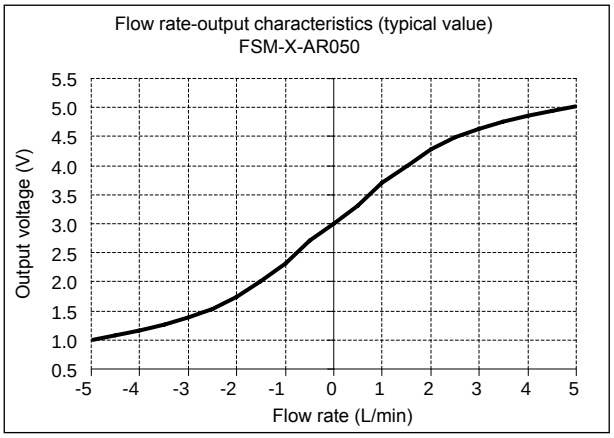

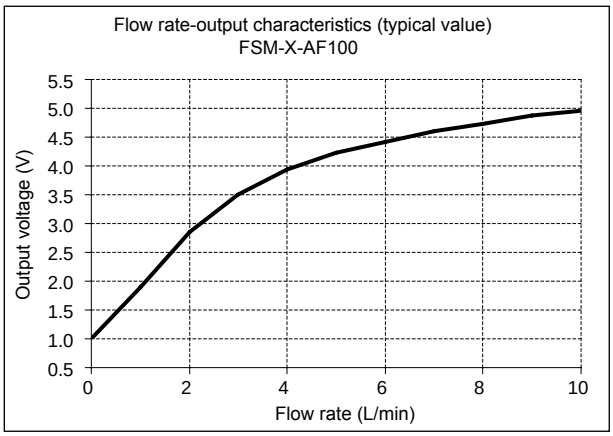

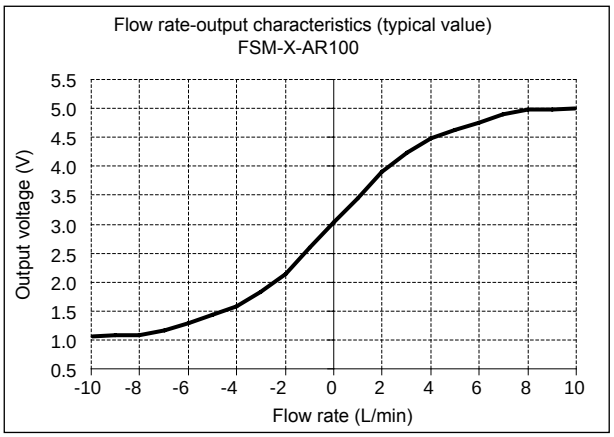

* The output voltage may vary depending on the working pressure or piping conditions.

Pressure loss characteristics

● FSM-X-AF005-H04

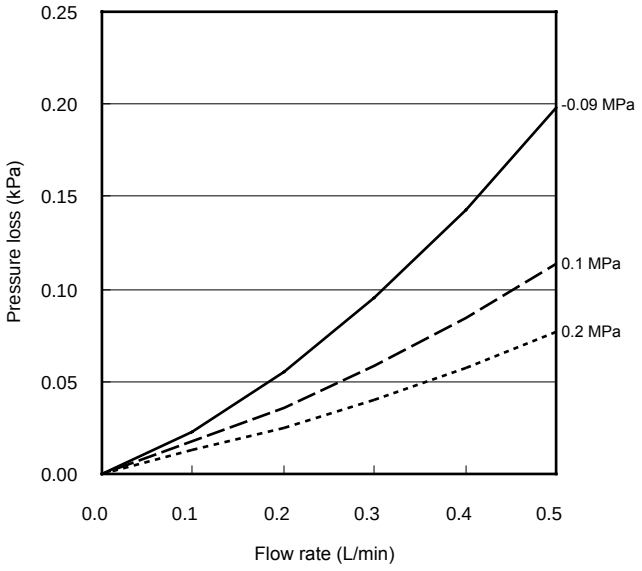

● FSM-X-AF010-H04

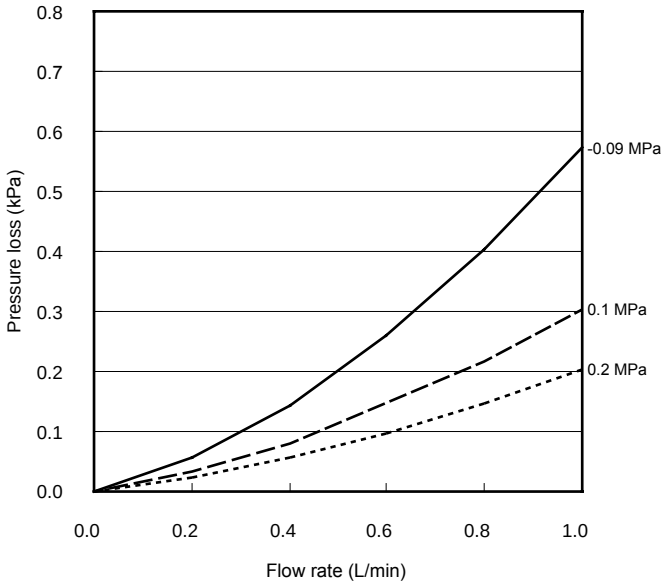

● FSM-X-AF050-H04

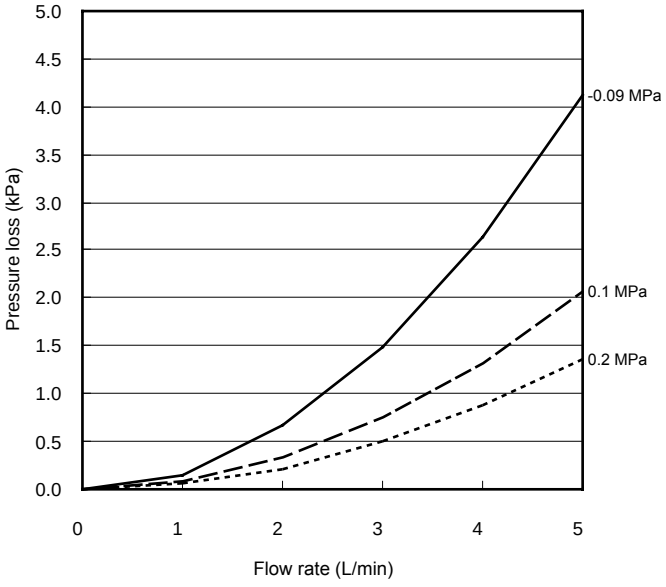

● FSM-X-AF100-H04

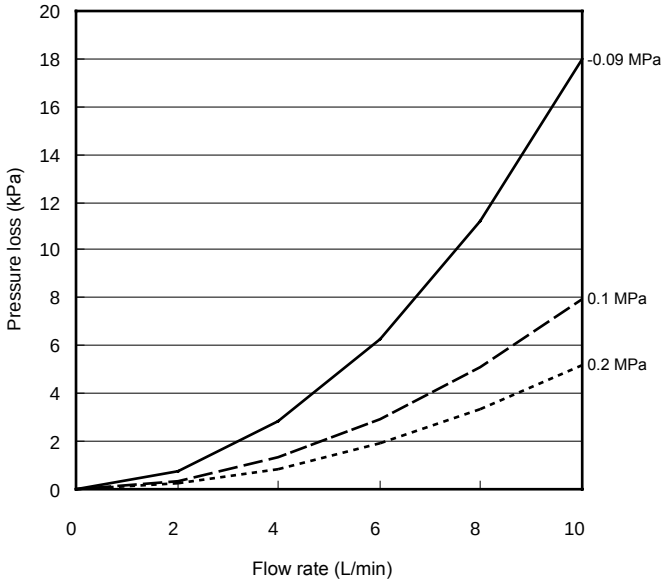

* The pressure loss may increase depending on the piping conditions.

Example of internal circuit and load connection

● FSM-X (analog output)

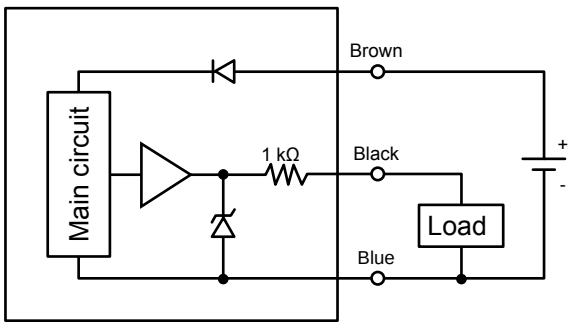

Line color	Description
Brown	Power supply 24 VDC
Blue	0 V(GND)
Black	Analog output: (1 to 5 V) connected load impedance 50 kΩ or more

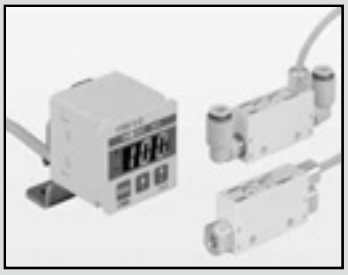

Miniature flow rate sensor
RAPIFLOW
analog output/switch output

FSM-V Series (for air/nitrogen gas)

● Flow rate range: ±0.05, ±0.1, ±0.5, ±1, ±5, ±10 L/min

Sensor body specifications

1 MPa ≈ 145.0 psi, 1 MPa = 10 bar

Model No.		Analog output						Switch output					
Item		FSM-V-A -R0005	FSM-V-A -R0010	FSM-V-A -R0050	FSM-V-A -R0100	FSM-V-A -R0500	FSM-V-A -R1000	FSM-V-$^{N}/_{P}$ -R0005	FSM-V-$^{N}/_{P}$ -R0010	FSM-V-$^{N}/_{P}$ -R0050	FSM-V-$^{N}/_{P}$ -R0100	FSM-V-$^{N}/_{P}$ -R0500	FSM-V-$^{N}/_{P}$ -R1000
Flow rate range (L/min) *6		-0.05 to +0.05	-0.1 to +0.1	-0.5 to +0.5	-1 to +1	-5 to +5	-10 to +10	-0.05 to +0.05	-0.1 to +0.1	-0.5 to +0.5	-1 to +1	-5 to +5	-10 to +10
(Ref) Nozzle for suction/release		ø0.1 nozzle		ø0.2 nozzle	ø0.3 nozzle	Collet nozzle		ø0.1 nozzle		ø0.2 nozzle	ø0.3 nozzle	Collet nozzle	
Working conditions	Applicable fluid	Clean air (JIS B 8392-1:2012 (ISO 8573-1:2010) [1: 1: 1 to 5: 6: 2]), compressed air (JIS B 8392-1: 2012 (ISO 8573-1: 2010) [1: 1: 1 to 1: 6: 2]), *1 nitrogen gas											
	Max. working pressure MPa	0.2 (≈29 psi, 2 bar)											
	Min. working pressure MPa	-0.09 (≈-13 psi, -0.9 bar)											
	Proof pressure MPa	0.3 (≈44 psi, 3 bar)											
	Ambient temperature/humidity °C	0 (32°F) to 50 (122°F), 90% RH or less (no condensation)											
	Working fluid temperature °C	0 (32°F) to 50 (122°F)											
Display		Power display (green)						Power display (green), switch output display (yellow)					
Output		Analog output 1 point *2 (1 to 5 V voltage output, connecting load impedance 50 kΩ and over) *7						Switch output 2 points *3 (NPN or PNP open collector output, 30 VDC or less and 50 mA or less, PLC/relay compatible)					
Accuracy *4	Linearity	±5% F.S. or less (0.1 MPa (≈15 psi), flow rate range ±100% F.S.)						-					
	Pressure characteristics	±5% F.S. or less (-0.09 to 0.2 MPa, 0.1 MPa reference)						-					
	Temperature characteristics	±0.2% F.S./°C or less (15 (59°F) to 35°C (95°F), 25°C (77°F) reference)						-					
	Repeatability	±1% F.S. or less				±2% F.S. or less		±2% F.S. or less					
Response time		5 ms or less (discrete sensor/when 90% of the final attained output voltage is reached) *5											
Power supply voltage		12/24 VDC(10.8 to 26.4 V)											
Current consumption		30 mA or less											
Lead wire		ø2.6 3-conductor (0.15mm² insulator outer diameter ø0.81) 3 m						ø2.6 4-conductor (0.15mm² insulator outer diameter ø0.81) 3 m					
Mounting	Mounting orientation	Unrestricted in vertical/horizontal direction											
	Straight piping section	Not required											
Degree of protection		IEC standards IP40											
Vibration resistance		10 to 150 Hz, compound amplitude 1.5 mm, max. 10 G, 2 hours per X, Y, Z direction											
EMC Directive		EN55011,EN61000-6-2,EN61000-4-2/3/4/6/8											
Weight g		Approx. 8 (excluding lead wire and fitting)											

*1: Use air which does not contain corrosive elements such as chlorine, sulfur or acids.
When using compressed air, use clean air that complies with JIS B 8392-1: 2012 (ISO 8573-1: 2010) Class [1: 1: 1 to 1: 6: 2].
Compressed air from the compressor contains drainage (water, oil oxides, foreign matter, etc.). To maintain the function of this product, install a filter, air dryer (min. pressure dew point 10˚C or less), and oil mist filter (max. oil content 0.1 mg/m³) on the primary side (upstream side) of this product.
When using this product to confirm suction, be sure to install an air filter (filtration rating 30 mm or less) between the suction nozzle and the product to prevent intake of foreign matter.

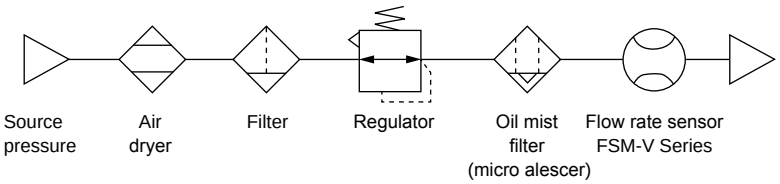

*2: The analog output indicates 3 V when the flow rate is 0, and changes to 5 V when the fluid flows to the right (when the lead wire is to the right of the body). In addition, it changes to 1 V with reverse flow.
*3: The switch output uses the method of one boundary-value determination with fixed hysteresis, and can be set with all flow rate ranges by rotating the trimmer. In addition, the operation modes of OUT1 and OUT2 are opposite to each other.
*4: Calibrate the sensor at 1 to 5 V.
Accuracy conditions: Temperature 25±3˚C, power supply voltage 24±0.01 VDC
F.S. (full scale) in these specifications indicates the flow rate range. For example, the F.S. for flow rate range of -10 to +10 L/min is 20 L/min.
*5: The response time varies depending on the piping conditions.
*6: The value converted to volumetric flow rate 20°C 1 barometric pressure (101 kPa) relative humidity 65%.
*7: The output impedance of the analog output section is 1 kΩ . If the impedance of the connecting load is small, output error increases. Check error with the impedance of the connecting load before using.
■ Example of calculation
· Output impedance of FSM-V Ro = 1 kΩ
· Load internal impedance Rx = 1 MΩ
· Output value = (1 - Ro/[Ro + Rx]) x 100% = (1 - [1 kΩ/[1 kΩ + 1 MΩ]) x 100%
⇒ Output value error = approx. 0.1%

Separated display specifications (dedicated for analog output) *7

Model No.		Separated display					
Item		FSM-V-D$^{N}_{P}$-R0005	FSM-V-D$^{N}_{P}$-R0010	FSM-V-D$^{N}_{P}$-R0050	FSM-V-D$^{N}_{P}$-R0100	FSM-V-D$^{N}_{P}$-R0500	FSM-V-D$^{N}_{P}$-R1000
Linkable analog output model No.		FSM-V-A-R0005	FSM-V-A-R0010	FSM-V-A-R0050	FSM-V-A-R0100	FSM-V-A-R0500	FSM-V-A-R1000
Display	Display	Flow rate display (7-segment 3-digit orange), operation and switch output display (orange)					
	Min. display unit *8	0.1 mℓ/min *7	1 mℓ/min *7		0.01 ℓ/min *7		0.1 ℓ/min *7
Output		Switch output 2 points (NPN or PNP open collector output, 30 VDC or less/50 mA or less, voltage drop 2.4 V, PLC/relay compatible) Analog output 1 point (1 to 5V voltage output, connected load impedance 50 kΩ and over)					
Power supply voltage		12/24 VDC(10.8 to 26.4V)					
Current consumption		50 mA or less (display only)					
Lead wire		ø3.7 5-conductor (0.2mm^2 insulator outer diameter ø1.0) 1 m					
Functions		Flow rate display, flow rate display peak hold, switch output, analog output					
Operating ambient temperature/humidity		0 (32°F) to 50°C (122°F), 85% RH or less (no condensation)					
Degree of protection		IEC standards IP40					
EMC Directive		EN55011,EN61000-6-2,EN61000-4-2/3/4/6/8					
Weight g		Approx. 55 (including lead wire 1 m)					

*7: The separated display is dedicated for analog output. Note that the switch output cannot be connected.
*8: This indicates min. display unit of flow rate, and does not guarantee indicator accuracy.

How to order

● Sensor body

FSM - V - A H 3 - R0005 - H2

Model No.

Ⓐ Output

Ⓑ Lead wire leadout direction

Ⓒ Lead wire length

Ⓓ Flow rate

Ⓔ Fitting

Code	Description
Ⓐ Output	
A	Analog output
N	Switch output (NPN)
P	Switch output (PNP)
Ⓑ Lead wire leadout direction	
H	Straight
V	L-shaped
Ⓒ Lead wire length	
3	3 m
Ⓓ Flow rate	
R0005	±0.05 L/min
R0010	±0.1 L/min
R0050	±0.5 L/min
R0100	±1 L/min
R0500	±5 L/min
R1000	±10 L/min
Ⓔ Fitting	
H2	Straight ø1.8 fiber tube (Ⓓ R1000 type cannot be selected)
H4	Straight ø4 push-in
HL4	L-shaped ø4 push-in
M5	Port size M5

● Separated display (dedicated for analog output)

FSM - V - D N - R0050

Model No.

Ⓐ Switch output

Ⓑ Flow rate

Code	Description
Ⓐ Switch output	
N	NPN output
P	PNP output
Ⓑ Flow rate	
R0005	±0.05 L/min
R0010	±0.1 L/min
R0050	±0.5 L/min
R0100	±1 L/min
R0500	±5 L/min
R1000	±10 L/min

* Refer to pages 1468 to 1474 for operation and dimensions, etc.

● Mounting bracket for separated display

PPD3 - KL-D

Ⓐ Mounting bracket kit

Code	Description
Ⓐ Mounting bracket kit	
KL-D	One-side mounting foot (L-shaped mounting)
KD-D	Two-side mounting foot (parallel mounting)
KHS-D	Panel mounting bracket set with cover
KC	Operation protective cover

* Refer to pages 1468 and 1469 for dimensions and mounting dimensions of mounting bracket.

Internal structure and parts list

● FSM-V-□□3-R□-M5/for analog output
(switch output also has the same internal structure)

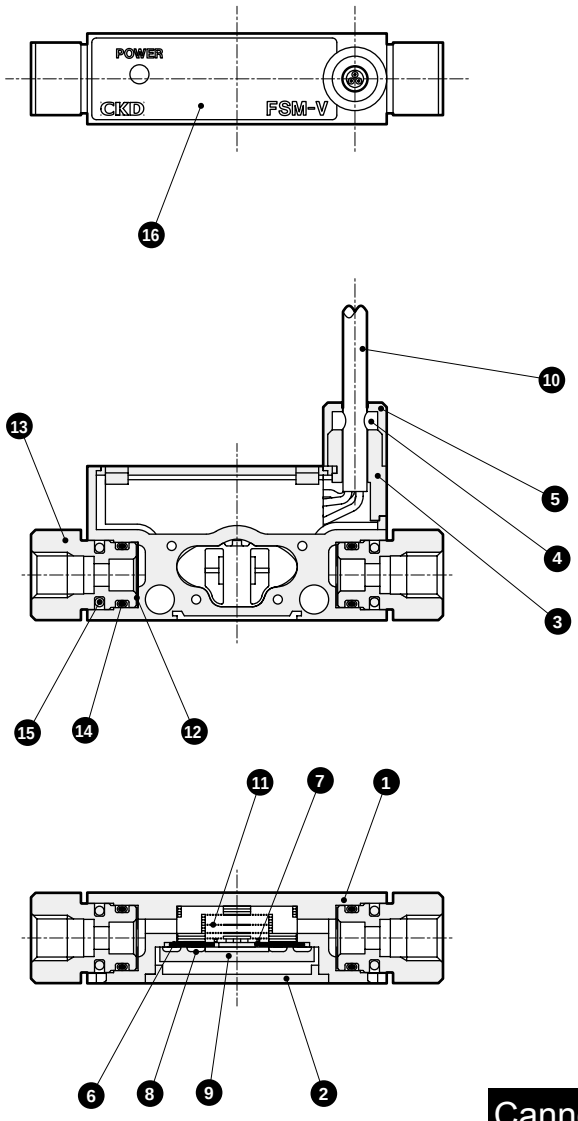

Cannot be disassembled

No.	Part name	Material	No.	Part name	Material
1	Body	Polybutylene terephthalate	9	Electronic circuit board	Glass epoxy resin
2	Case	Polybutylene terephthalate	10	Lead wire	Halogen-free polyethylene resin blend
3	Lead wire holder	Polybutylene terephthalate	11	Rectifier	Stainless steel
4	Bush	Nitrile rubber	12	Filter	Stainless steel
5	Bush holder	Aluminum alloy	13	Cartridge fitting (M5)	Aluminum alloy
6	Sensor gasket	Fluoro rubber	14	O-ring	Nitrile rubber
7	Sensor chip	Silicone	15	Fitting fixing pin	Stainless steel
8	P-TITE screw	Steel (zinc plating)	16	Front sheet	Polyester film

*1: The analog output and the switch output differ in appearance of the front sheet section.

● Separated display FSM-V-D□-R□

Refer to page 1468 for internal structure.

Dimensions (common to analog output and switch output)

CAD

● FSM-V-□V3-R□-H2
(Radial lead wire, straight ø1.8 fiber tube)

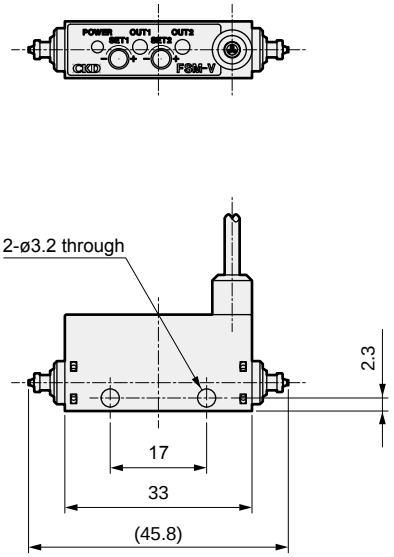

● FSM-V-□H3-R□-H2
(Axial lead wire, straight ø1.8 fiber tube)

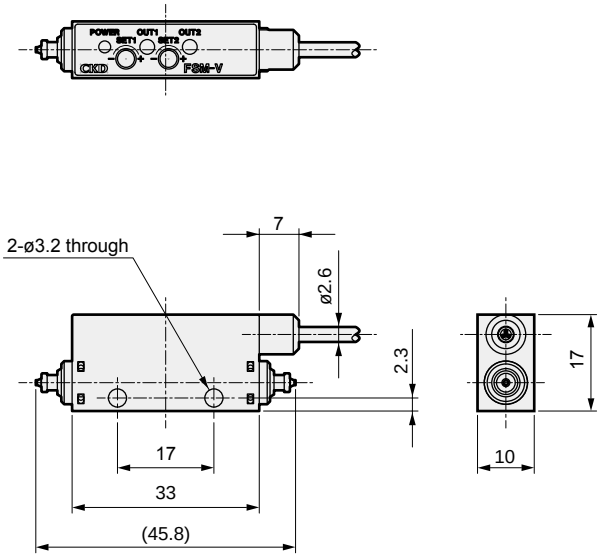

● FSM-V-□V3-R□-H4
(Radial lead wire, straight ø4 push-in)

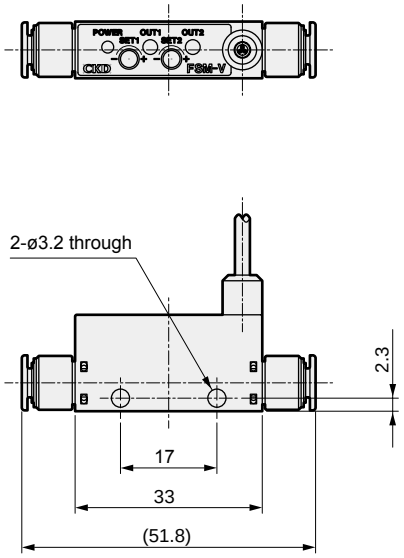

● FSM-V-□H3-R□-H4
(Axial lead wire, straight ø4 push-in)

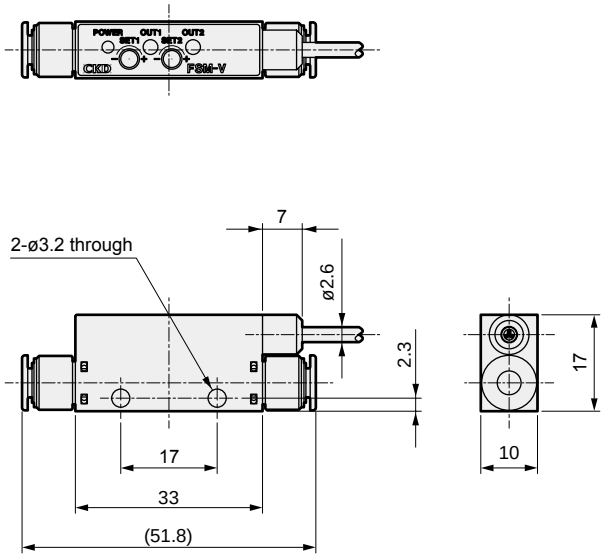

* The analog output and the switch output differ in appearance of the front sheet section.

Dimensions

● FSM-V-□V3-R□-HL4
(Radial lead wire, L-shaped ø4 push-in)

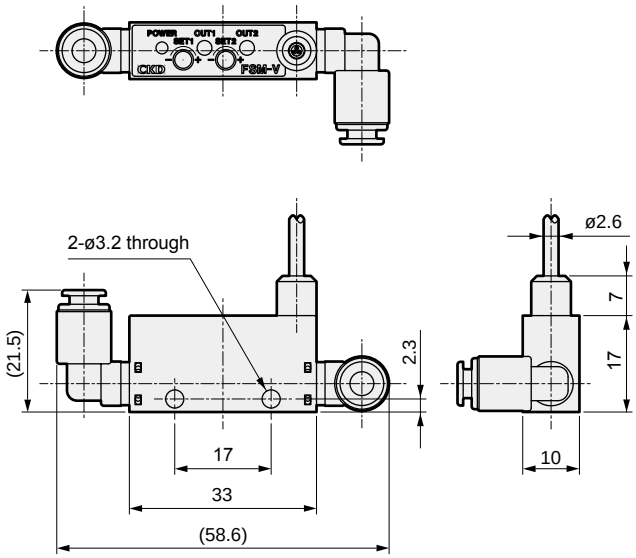

● FSM-V-□H3-R□-HL4
(Axial lead wire, L-shaped ø4 push-in)

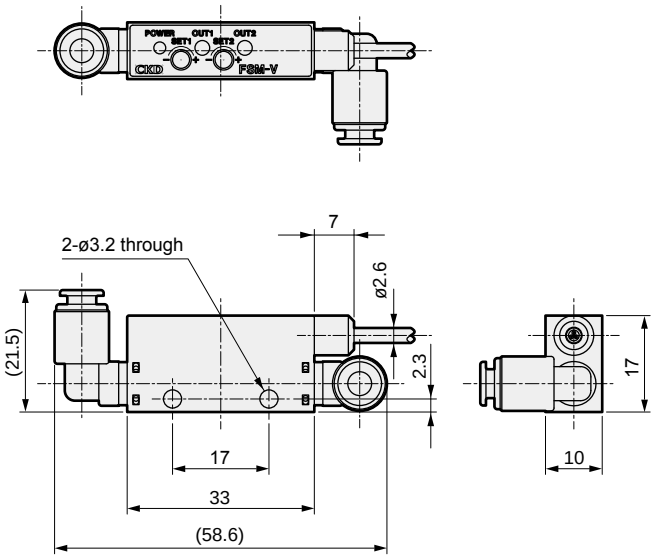

● FSM-V-□V3-R□-M5
(Radial lead wire, port size M5)

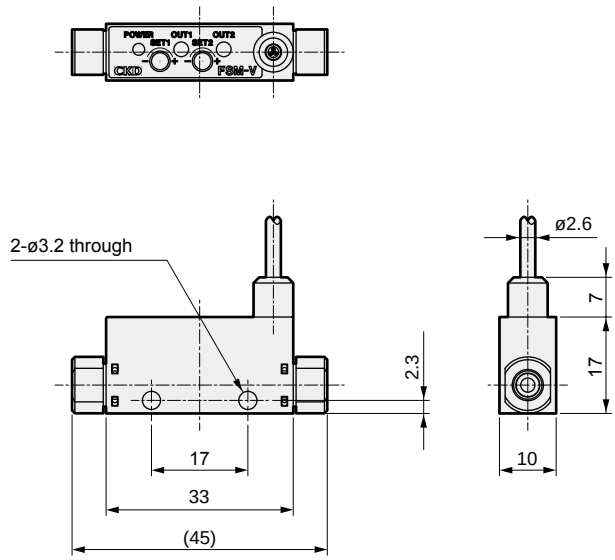

● FSM-V-□H3-R□-M5
(Lead wire straight, port size M5)

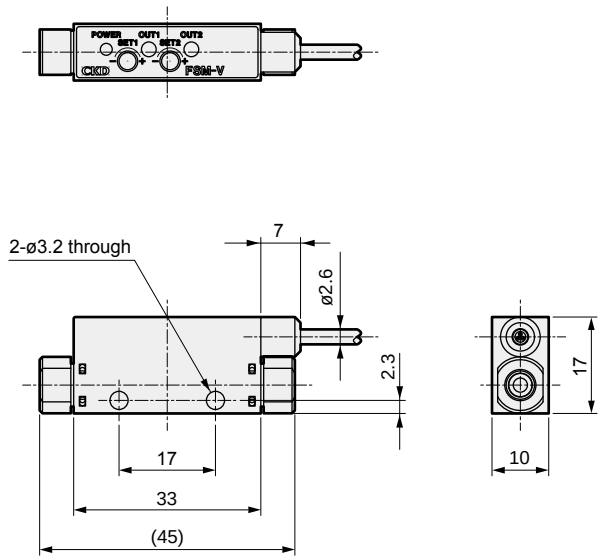

* The analog output and the switch output differ in appearance of the front sheet section.

Analog output characteristics

● FSM-V-A-R0100

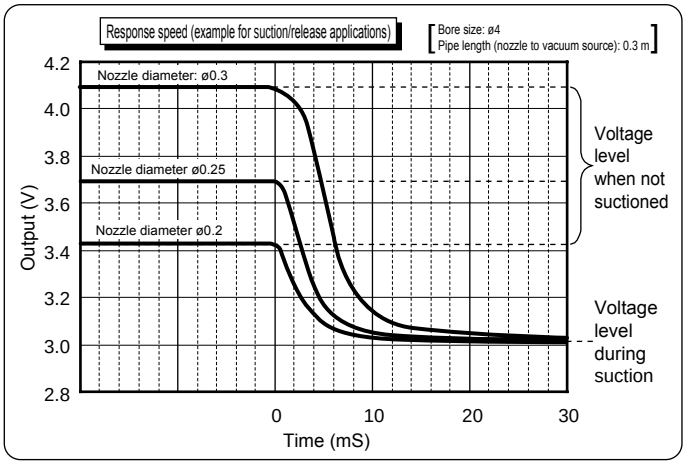

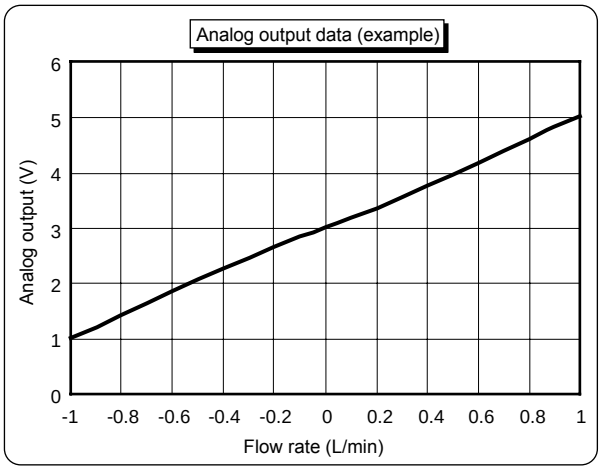

Pressure loss characteristics

● FSM-V-□-R0005-H4

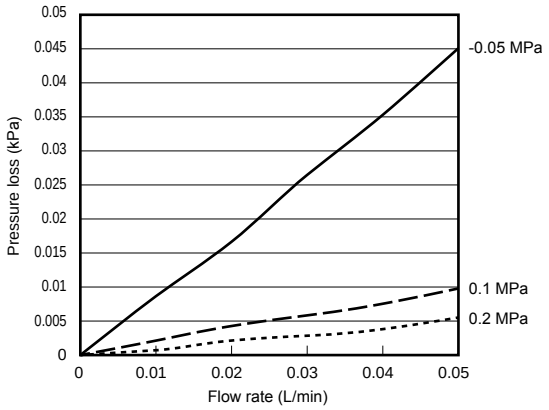

● FSM-V-□-R0010-H4

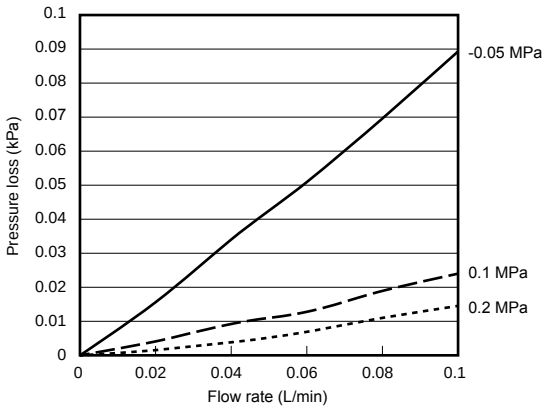

● FSM-V-□-R0050-H4

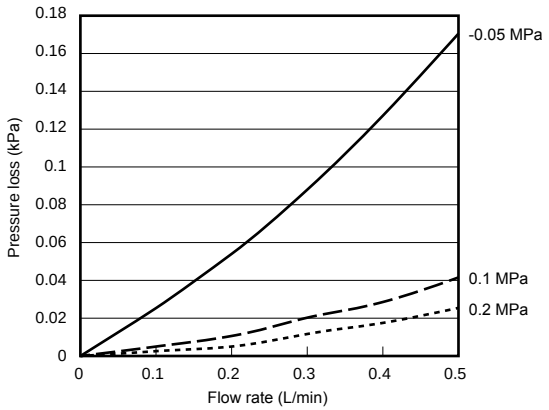

● FSM-V-□-R0100-H4

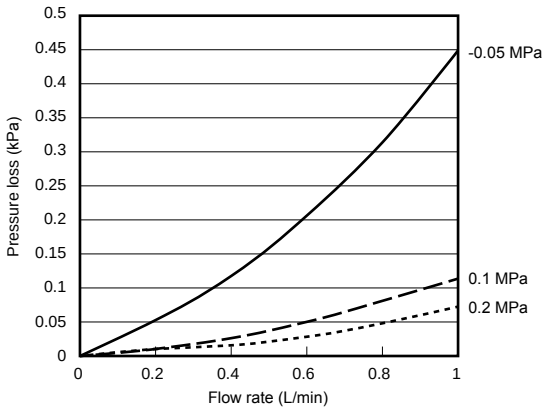

● FSM-V-□-R0500-H4

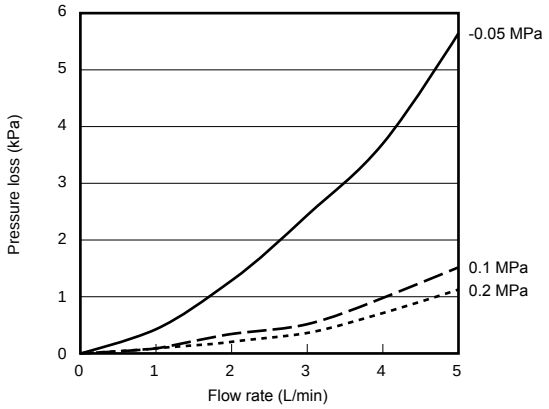

● FSM-V-□-R1000-H4

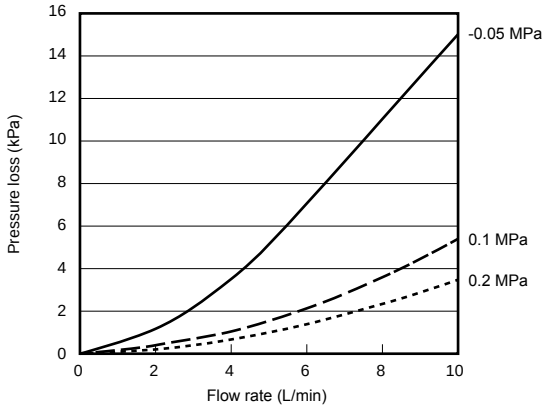

* When using the fiber tube, the pressure loss may increase depending on the piping conditions.

Names, functions and setting method of operation section

● Switch output

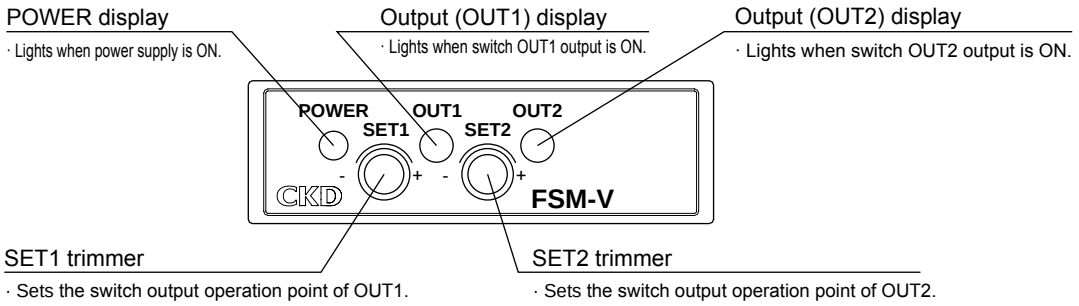

Switch setting method (switch operation and flow direction of fluid)

· Rotate the trimmers of SET1 and SET2 to set ON/OFF of 2 switch output points (OUT1/OUT2). Note that the switch operations at 2 output points differ as indicated in the figure at right.

· Use a Phillips screwdriver for 0 bit.

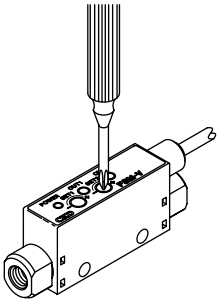

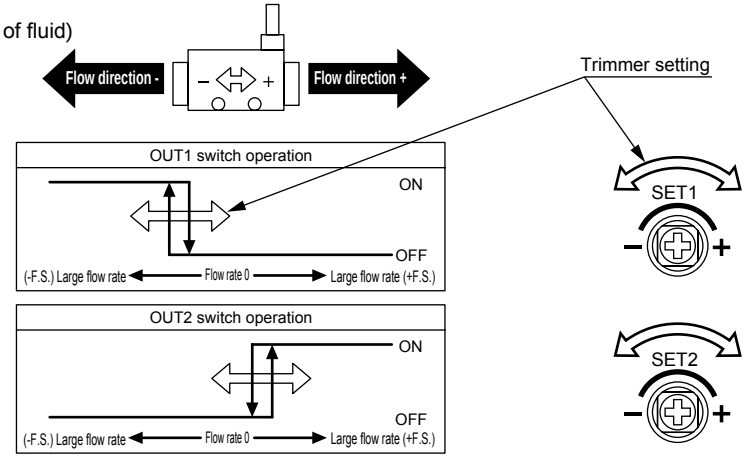

(Precautions) · The hysteresis of the switch output is a fixed value (10% F.S. or less).
· Do not press the trimmer forcibly with the screwdriver. The trimmer will be damaged.

● Separated display

Refer to page 1471 for name, function and operation of the separated display.

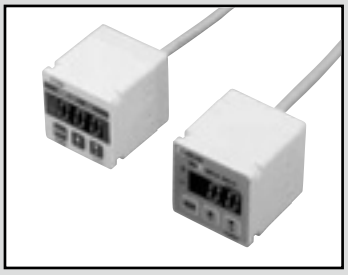

Separated display

FSM-V-D □ Series (for FSM-V)

RoHS CAD

Internal structure and parts list

● FSM-V-D□-□ (Separated display)

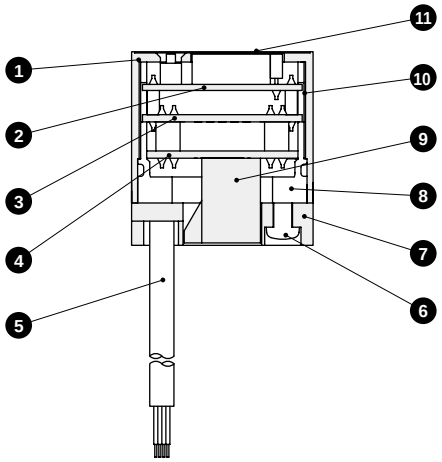

No.	Part name	Material
1	On the case	Polybutylene terephthalate
2	Display base	Glass epoxy resin
3	CPU board	Glass epoxy resin
4	Sensor board	Glass epoxy resin
5	Lead wire (1 m)	Polyvinyl chloride
6	Thread	Copper alloy/nickeling
7	Back surface cover	Polybutylene terephthalate
8	Inside the case	Polybutylene terephthalate
9	Terminal block	Polyamide/copper alloy (plating)
10	Shield sheet	Aluminum
11	Front surface sheet	Polyester film

Cannot be disassembled

Dimensions CAD

● FSM-V-D□-□

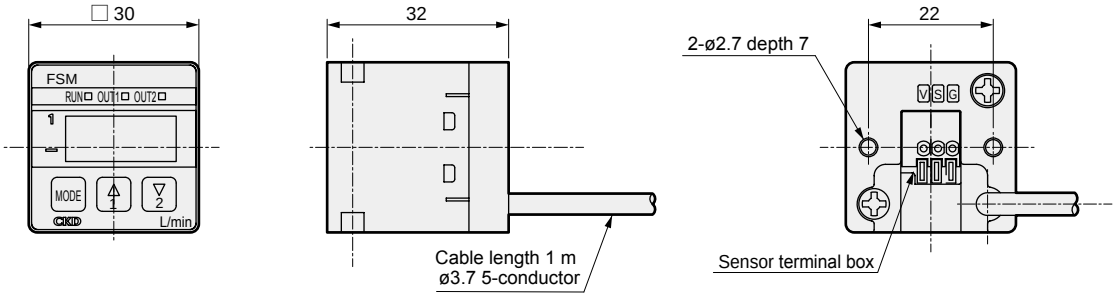

Mounting bracket dimensions

● One-side mounting foot attached (PPD3-KL-D)
* L shaped bracket, mounting screws 2 pcs.

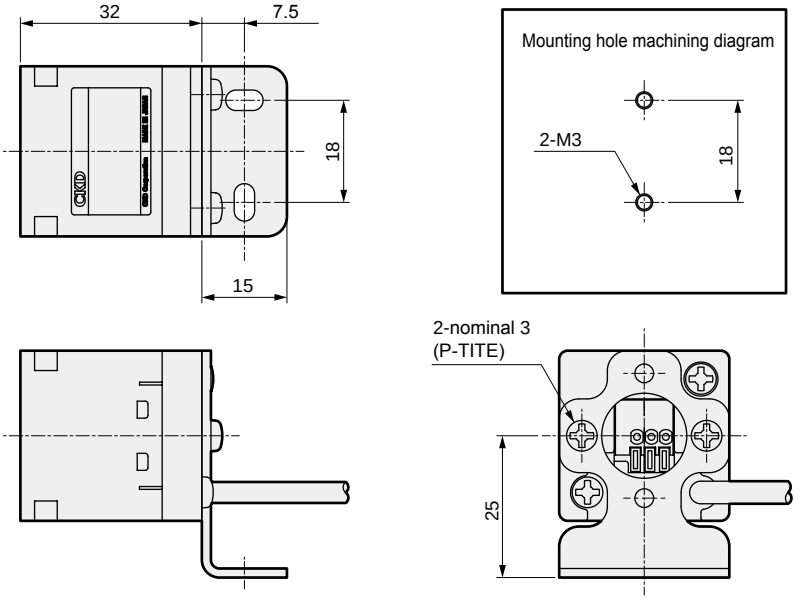

This mounting bracket can be mounted at 90° intervals to the switch body.
Determine the mounting direction according to the mounting location.

Mounting bracket dimensions

● Two-side mounting foot attached (PPD3-KD-D)
* D type bracket, mounting screws 2 pcs.

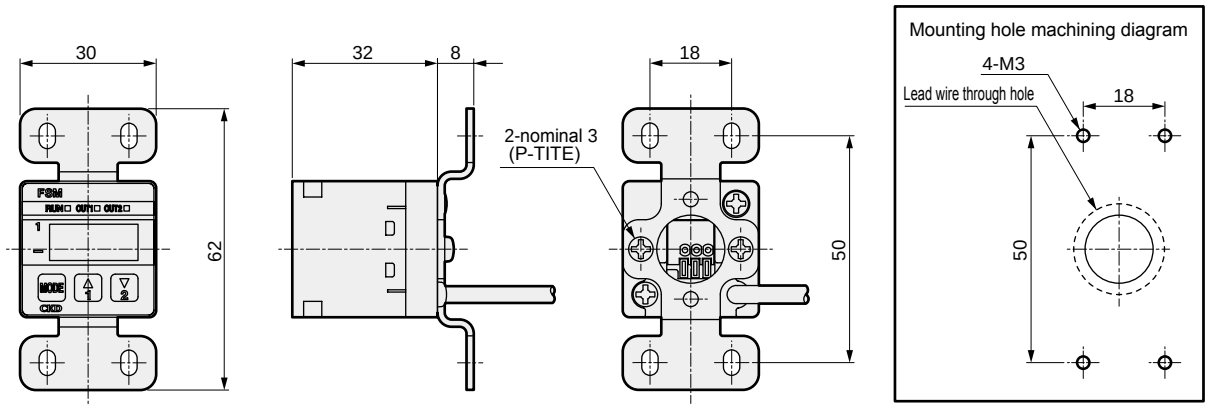

This mounting bracket can be mounted at 90° intervals.
Determine the mounting direction according to the mounting location.

● Panel mounting bracket set with cover (PPD3-KHS-D)
* Panel bezel, panel holder, panel key, panel cover

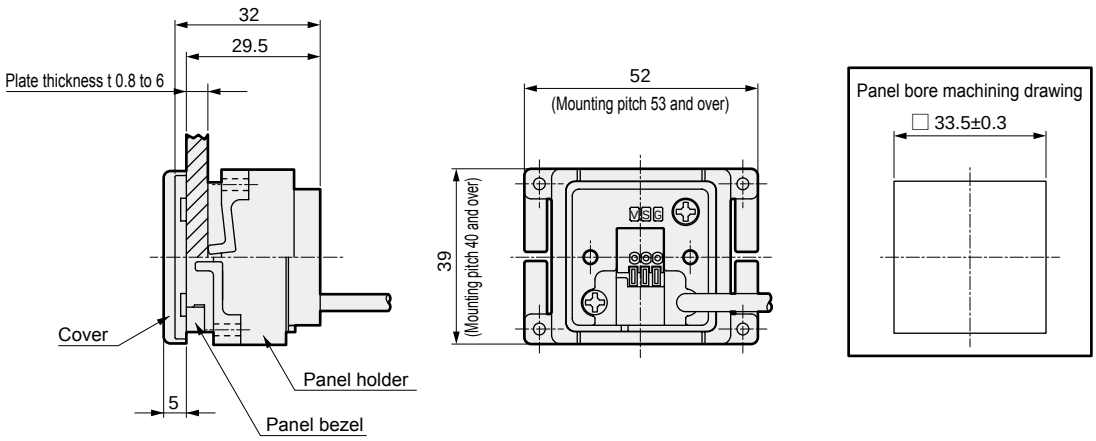

The mounting direction of the panel holder can be changed by 90°.

● Operation protective cover attached (PPD3-KC)
* Protective cover, protective cover holder

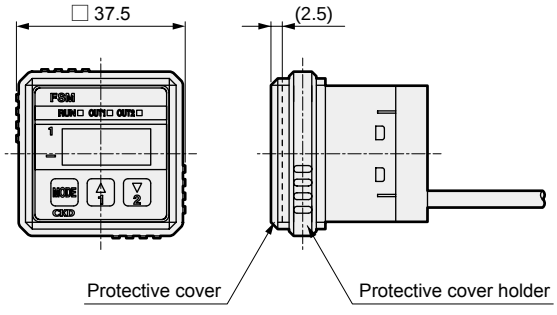

Note: Cannot be combined with PPD3-KHS-D.

Example of internal circuit and load connection

[FSM-V Series]

● FSM-V-A□ (Analog output)

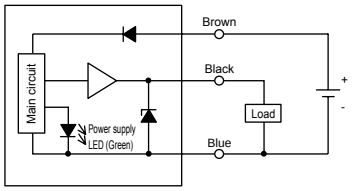

Line color	Description
Brown	Power supply 12 to 24 VDC
Blue	0 V(GND)
Black	Analog output (1 to 5 V)

● Connection method of separated display with analog output

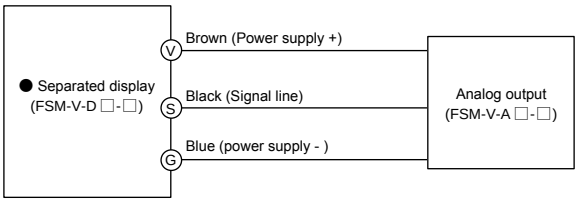

Note: The switch output cannot be combined with separated display.

● FSM-V-N□ (switch output NPN output)

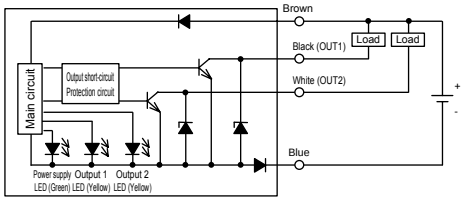

Line color	Description
Brown	Power supply 12 to 24 VDC
Blue	0 V(GND)
Black	OUT1(max. 50 mA)
White	OUT2(max. 50 mA)

● FSM-V-P□ (switch output PNP output)

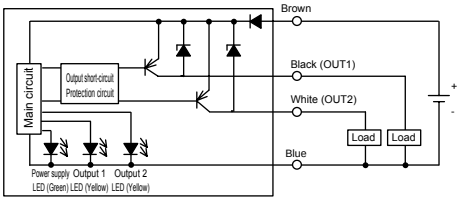

Line color	Description
Brown	Power supply 12 to 24 VDC
Blue	0 V(GND)
Black	OUT1(max. 50 mA)
White	OUT2(max. 50 mA)

[Separated display]

● FSM-V-DN-□ (separated display NPN output)

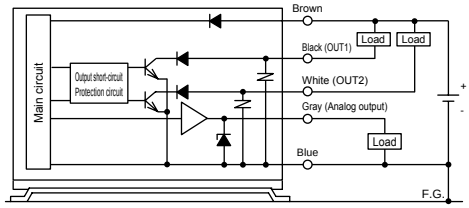

Line color	Description
Brown	Power supply 12 to 24 VDC
Blue	0 V(GND)
Gray	Analog output (1 to 5 V)
Black	OUT1(max. 50 mA)
White	OUT2(max. 50 mA)

· To reset short-circuit protection, turn OFF feed power supply, correct wiring mistakes, etc., then turn the power ON again.

● FSM-V-DP-□ (separated display PNP output)

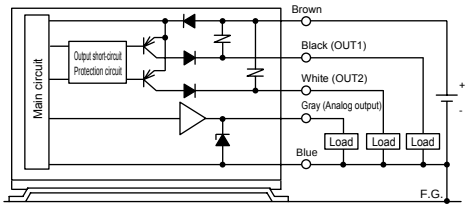

Line color	Description
Brown	Power supply 12 to 24 VDC
Blue	0 V(GND)
Gray	Analog output (1 to 5 V)
Black	OUT1(max. 50 mA)
White	OUT2(max. 50 mA)

· To reset short-circuit protection, turn OFF feed power supply, correct wiring mistakes, etc., then turn the power ON again

Names and functions of display/operation section

● Separated display (FSM-V-D)

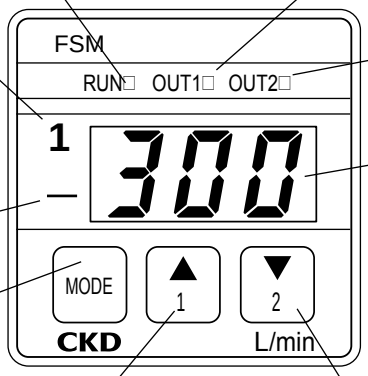

RUN display
· Turns ON when flow rate is displayed.
· Blinks when peak hold operates.

Overflow display (excluding FSM-V-D□)
· Turns ON when 3-digit display limit is exceeded, and indicates 1.
(at 10.00 L/min, this 1 turns ON and displays a 3-digit 0.00 LED.)

Minus display
· Turns ON during reverse direction flow.

MODE key
· Used to enter each setting mode.
· Used to advance setting mode.
· Used to return to flow rate display.
· Used to cancel peak hold operation.

1 (UP) key
· During flow rate display, displays CH1 data sequentially.
· During peak hold operation, displays max. value.
· During mode selection, sets the mode.
· When setting each data, it is used to count up the values, etc.

Output (OUT1) display
· Lights when switch CH1 output is ON.
· Blinks when overcurrent is detected.

Output (OUT2) display
· Lights when switch CH2 output is ON.
· Blinks when overcurrent is detected.

3-digit LED display
· Displays flow rate, switch set values, and machine state
· In case of overflow, Hi is displayed. (Hi is displayed at approx. 10% F.S. or more.)
· In case of reverse direction overflow, Lo is displayed. (Lo is displayed at approx. -10% F.S. or below.)

2 (DOWN) key
· During flow rate display, displays CH2 data sequentially.
· During peak hold operation, displays min. value.
· During mode selection, sets the mode.
· When setting each data, it is used to count down the values, etc.

Operating method

Switch output function

Switch operation mode

Name of operation pattern	LED display	Operation waveform
Window operation 1 (ON when inside range)	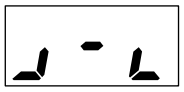	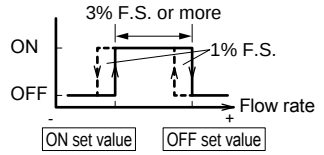
Window operation 2 (ON when outside range)	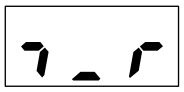	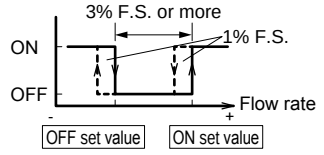
Hysteresis operation 1 (ON at low flow rate side)		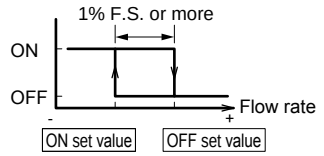
Hysteresis operation 2 (ON at high flow rate side) (*6)		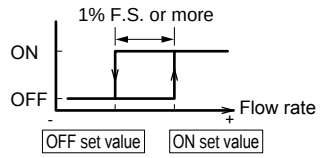
Switch output OFF	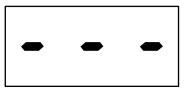	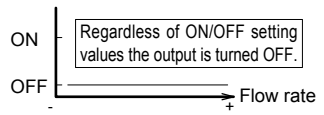

*1: In a window operation, provide an interval of 3% F.S. or more between the two setting values. A 1% F.S. hysteresis is automatically added to the ON and OFF sides.

*2: For hysteresis operation, provide an interval of 1% F.S. or more between the 2 set values.
If the two settings are the same, operation may not take place or may be unstable.

*3: If switches are operated when fluid is pulsating or flow rate is otherwise unstable, operation may be unstable.
In this case, provide sufficient margin between the two setting values, and confirm that switch operation is stable before use.

*4: The left side of the operation waveform indicates negative pressure and the right side positive pressure.

*5: Specifying the waveform pattern naturally determines the magnitude relationship of the ON and OFF setting values and precludes the reverse thereof.
With this product, however, operation of the designated operation pattern is the priority.
When two setting values are input, the device automatically judges their magnitude and assigns them setting values as ON and OFF accordingly.
Thus, even if ON and OFF setting values are input the other way by mistake, they will be corrected and the specified operation pattern will be performed.

*6: The output is held even during the Hi display.

Confirmation of set value

CH1 data display

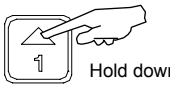

Hold down

CH2 data display

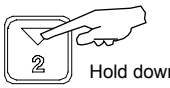

Hold down

By pressing each key during flow rate display, the switch data ON setting/OFF setting/ operation waveform, zero point adjustment value, and model No. can be confirmed.
Switch operation is not affected during this operation.

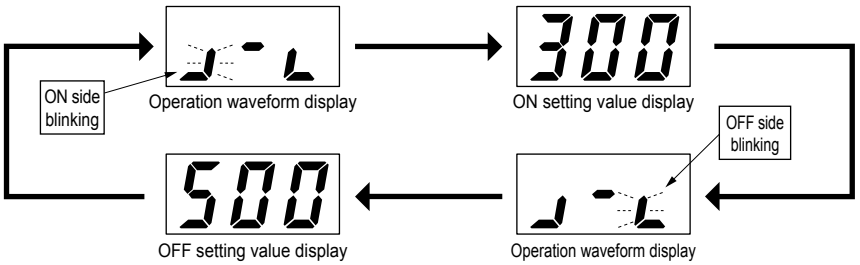

Zero point adjustment value/model No. display

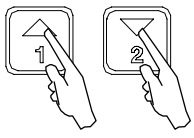

Hold down simultaneously

The zero point adjustment value and model No. are displayed alternately.
Switch operation is not affected even during this operation.



Operation method of each function

Peak hold function

Max. and min. values for the flow rate within a set interval are displayed.
Use this to check the instantaneous flow rate change, etc.
The peak hold operation does not affect this product's basic functions such as switch operations or flow rate display.

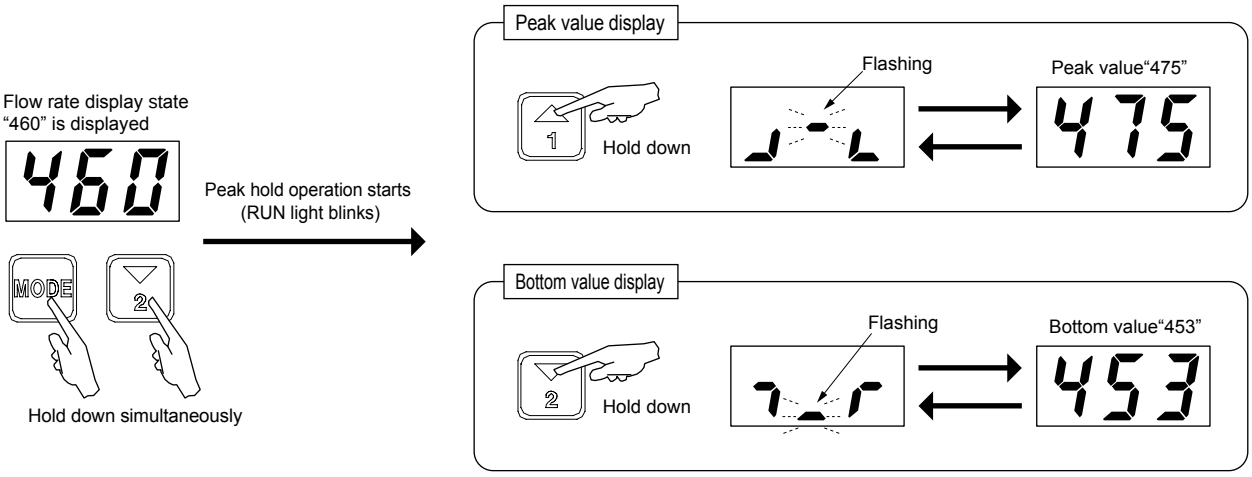

Switch output function

Refer to page 1474 for operation.

This product has 2-point switch output, and uses four operation modes and operation stop.
The switch function is started by setting the required operation pattern and by configuring two setting values, "ON/OFF", that specify the operation point.
Determine the required operation pattern and ON/OFF setting values before setting.
Select and set the following data to operate the switch.

CH1: Operation pattern	CH1: ON set value	CH1: OFF set value
CH2: Operation pattern	CH2: ON set value	CH2: OFF set value

Forced output function

Refer to page 1474 for operation.

Use this function to forcibly turn the switch output ON and confirm the wiring connection or initial operation of the input device.
(Note) Use this test function to check the wiring connection and input device operation. Avoid using this function instead of actual signals when executing the sequence program while the machinery and equipment are operating.

Zero point adjustment function

Refer to page 1474 for operation.

Deviation of the display from zero is compensated for in the no flow rate state.
If the setting was in error, readjust in a state with no fluid flowing.

(Note) The above settings and test significantly affect the output signal and display.
Before this operation, be sure to stop the machinery and equipment using this product and confirm that safety can be ensured in case of incorrect operation or display. Using this function while the machinery and equipment are operating is dangerous and may cause incorrect operation or display.

Return method

To return to the flow rate display during operation (when in settings mode), turn OFF the power supply, and then turn it ON again to return to the flow rate display.

Operation for switch output function/forced output function/zero point adjustment function

For safety, if no key is operated for 2 seconds or more before the mode is confirmed, the flow rate display is redisplayed.

[Flow rate display] 457

MODE Hold down

Flashing 457

Flashing CH1

MODE Release

Flashing CH1

When the MODE key is held down longer, the flow rate is redisplayed.

Basic key operation

These key operations are valid in the switch operation pattern setting, ON/OFF setting, and zero point adjustment mode.

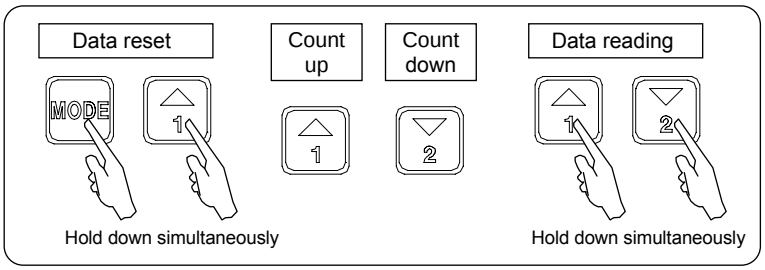

Setting data for the switch output function

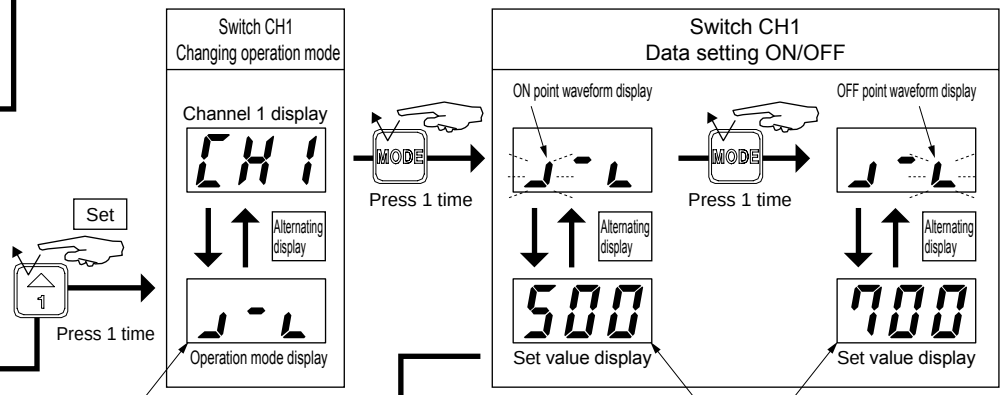

Set
1
Press 1 time

Changing operation mode with UP/DOWN keys

Change the value with UP/DOWN keys

MODE Press 1 time

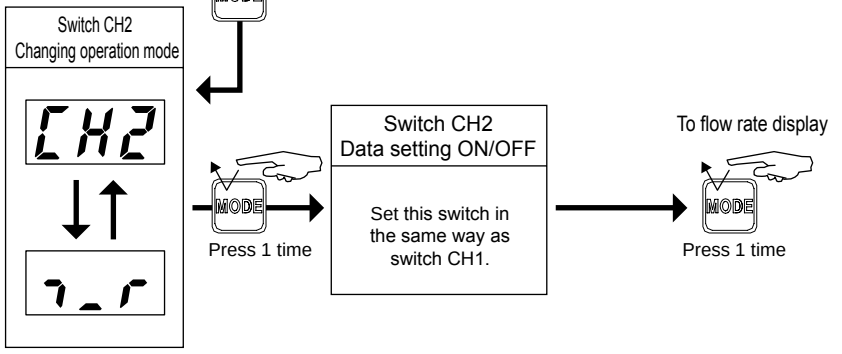

MODE Press 1 time

Flashing on

MODE Press 1 time

Flashing AdJ

Switch output forced ON mode

Set
1
Press 1 time

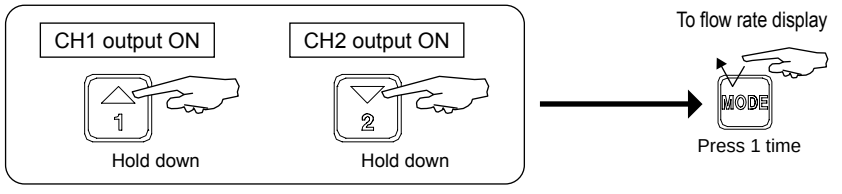

Zero point adjustment mode

Set
1
Press 1 time

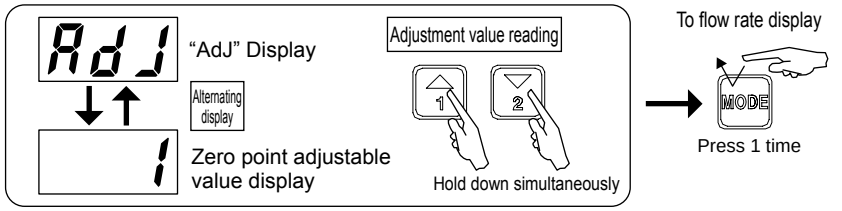

CAUTION Make sure to perform zero point adjustment in a state with no fluid flowing.

Measurement principle of FSM-V Series

The FSM-V Series incorporates a platinum sensor chip (3 mm x 3.5 mm) machined with silicon micro-machining. The sensor is thermally insulated from the silicon substrate. The heating capacity is extremely low, enabling high sensitivity with a high-speed response.
At the sensor, two temperature sensors are arranged with a heater in between. Platinum, which has a resistance that changes based on temperature, is used for the temperature sensor. When the heater is turned ON and heating occurs, the temperature distribution is symmetrical to the center of the heater if there is no flow. When flow is received, the symmetrical property of the temperature distribution is lost, temperature upstream from the heater drops, and temperature downstream rises. This temperature difference appears as the difference in temperature sensor resistance, and varies with the flow rate. When the flow is reversed, the temperature difference (difference in resistance) will be inverted. By using this method, the bi-directional flow rate can be detected. This method is suitable for detecting a relatively small flow rate.

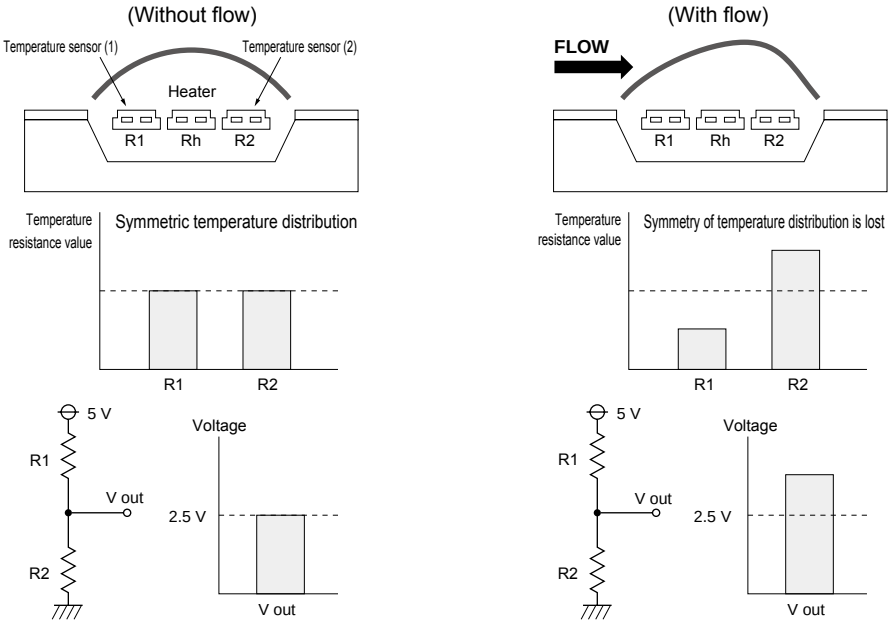

Customized products

Available as made to order. Contact CKD for details.

Type with filter

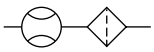

■ With filter ideal for suction confirmation
■ Compatible with FSM-V Series.



FSM-V Uni-direction detection

■ The standard is a bi-direction detection type, but a uni-direction detection is also supported. (Example: flow rate range ±10 L/min → 0 to 10 L/min)

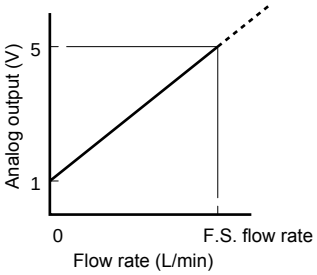



MEMO

1 Flow rate sensor selection method

Use as a guideline for selection of the flow rate range when using the flow rate sensor for suction nozzle suction/release confirmation or leakage inspection.

The flow rate can be calculated using the effective cross-sectional area of nozzle (pinhole) and the pressure difference inside and outside the nozzle.

● For $P_1 \geq 1.89P_2$ (acoustic velocity)

$Q=113.2 \times S \times P_1$

● For $P_1 < 1.89P_2$ (subsonic velocity)

$Q=226.4 \times S \times \sqrt{P_2(P_1-P_2)}$

Q : Flow rate L/min
P_1 : Primary side absolute pressure MPa
P_2 : Secondary side absolute pressure MPa
S : Effective cross-sectional area of nozzle (pinhole) mm^2

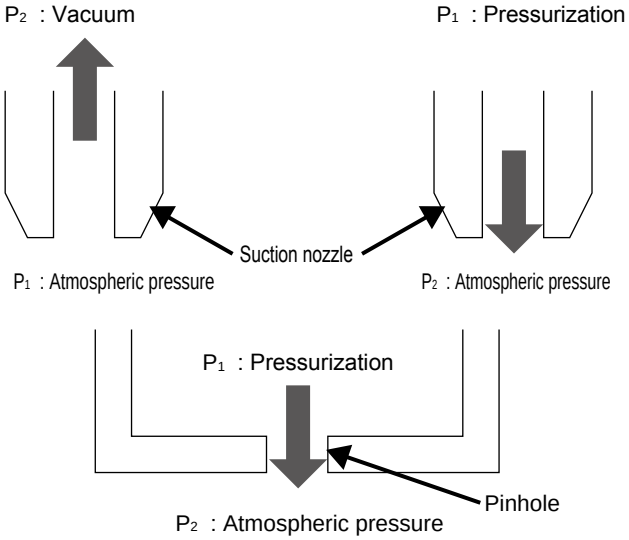

■ Example of calculation

The calculated value of flow rate when the nozzle diameter is ø0.1 to 2 and P_2 is varied is shown in the figure below.

	P_1 (MPa) Abs. press	P_1 (MPa) Gauge press	P_2 (MPa) Abs. press	P_2 (MPa) Gauge press	Acoustic/ subsonic velocity	Calculated flow rate value (L/min) ø0.1	ø0.2	ø0.3	ø0.4	ø0.5	ø0.7	ø1	ø1.5	ø2
Vacuum	0.1013	0	0.0313	-0.07	Acoustic velocity	0.090	0.360	0.810	1.440	2.250	4.411	9.002	20.254	36.007
	0.1013	0	0.0413	-0.06	Acoustic velocity	0.090	0.360	0.810	1.440	2.250	4.411	9.002	20.254	36.007
	0.1013	0	0.0513	-0.05	Acoustic velocity	0.090	0.360	0.810	1.440	2.250	4.411	9.002	20.254	36.007
	0.1013	0	0.0613	-0.04	Subsonic velocity	0.088	0.352	0.792	1.408	2.200	4.312	8.800	19.801	35.202
	0.1013	0	0.0713	-0.03	Subsonic velocity	0.082	0.329	0.740	1.315	2.055	4.028	8.220	18.494	32.878
	0.1013	0	0.0813	-0.02	Subsonic velocity	0.072	0.287	0.645	1.147	1.792	3.512	7.166	16.125	28.666
	0.1013	0	0.0913	-0.01	Subsonic velocity	0.054	0.215	0.483	0.859	1.343	2.631	5.370	12.083	21.480
Blow (leakage inspection)	0.1113	0.01	0.1013	0	Subsonic velocity	0.057	0.226	0.509	0.905	1.414	2.772	5.657	12.727	22.626
	0.1213	0.02	0.1013	0	Subsonic velocity	0.080	0.320	0.720	1.280	2.000	3.920	8.000	15.679	31.998
	0.1413	0.04	0.1013	0	Subsonic velocity	0.113	0.453	1.018	1.810	2.828	5.543	11.313	17.999	45.252
	0.1613	0.06	0.1013	0	Subsonic velocity	0.139	0.554	1.247	2.217	3.464	6.789	13.856	24.454	55.423
	0.1813	0.08	0.1013	0	Subsonic velocity	0.160	0.640	1.440	2.560	4.000	7.840	15.999	31.175	63.996
	0.2013	0.1	0.1013	0	Acoustic velocity	0.179	0.716	1.610	2.862	4.472	8.765	17.888	35.998	71.552
	0.3013	0.2	0.1013	0	Acoustic velocity	0.268	1.071	2.410	4.284	6.694	13.119	26.774	60.242	107.096
	0.4013	0.3	0.1013	0	Acoustic velocity	0.357	1.426	3.209	5.706	8.915	17.474	35.660	80.236	142.641
	0.5013	0.4	0.1013	0	Acoustic velocity	0.445	1.782	4.009	7.127	11.137	21.828	44.547	100.230	178.186
	0.6013	0.5	0.1013	0	Acoustic velocity	0.534	2.137	4.809	8.549	13.358	26.182	53.433	120.224	213.731

(CAUTION)

- When there is a leakage in the piping, etc., the actual flow rate becomes larger than the calculated value. When selecting the flow rate, consider the amount of leakage in the piping.
- When there is a portion narrower than the suction nozzle diameter in the middle of the piping, the flow rate may be reduced to lower than the calculated value.
  In addition, suction confirmation, etc., may become impossible.
- The effective cross-sectional area is just a guideline. When the nozzle is long and thin, the effective cross-sectional area becomes smaller than the opening area.
- The response time is determined by the inner volume of the piping from the flow rate sensor to suction nozzle (pinhole). For high-speed detection, reduce the inner volume of the piping as much as possible by installing a flow rate sensor near the suction nozzle, etc.

Suction confirmation

1 Response time

The response time at suction confirmation is determined by inner volume of the piping or exhaust capacity of the vacuum pump, etc. For example, with piping as in the figure at right, the response time piping dependency is as in the figure below. This result demonstrates that it is effective to reduce the inner volume of the piping from sensor to suction nozzle as small as possible in order to decrease the response time.

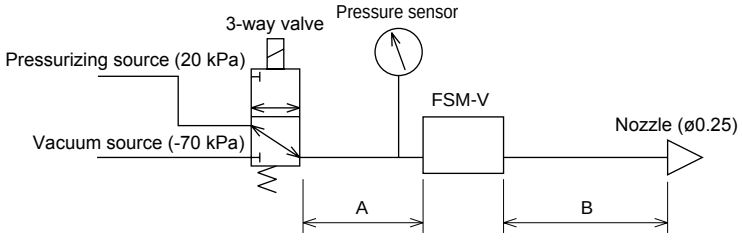

Test piping

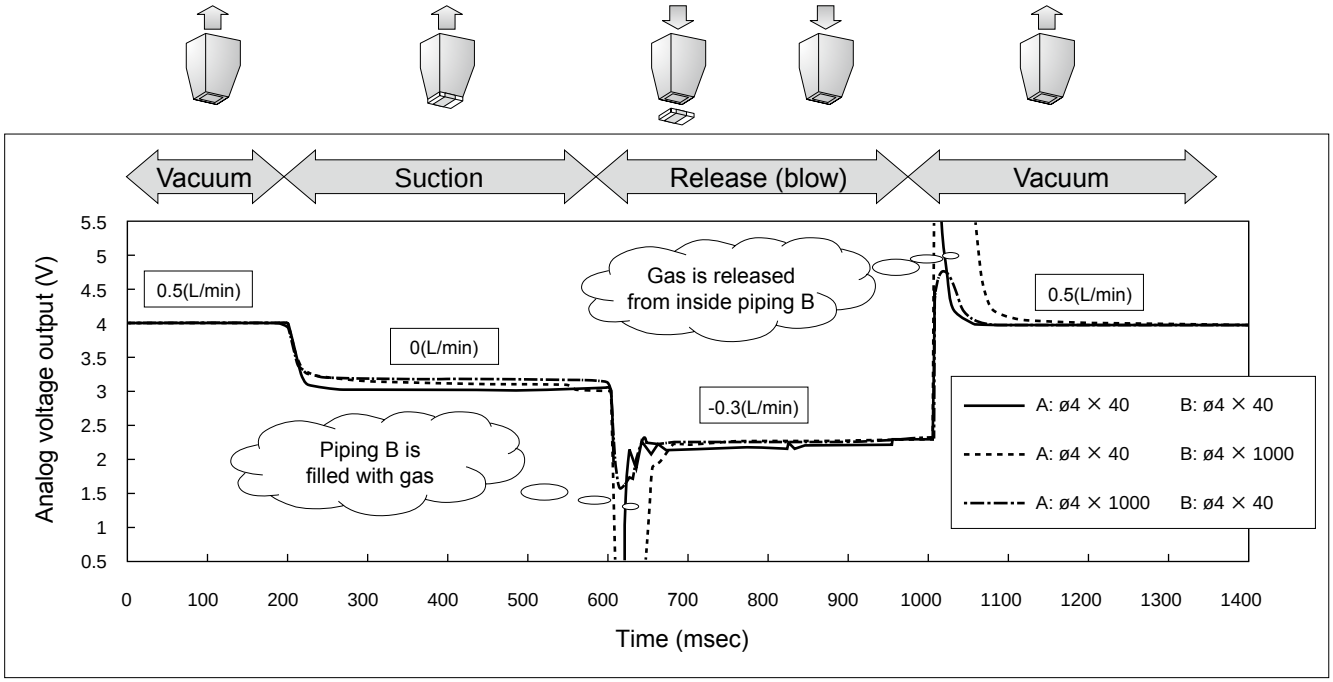

Response piping dependency

2 When using the collet nozzle

The collet nozzle is commonly used when you do not want the workpiece to be suctioned to contact the nozzle directly. The inside of the collet nozzle is pyramid-shaped, with a structure that creates gaps at the four corners when the workpiece is contacted, generating leaks during suction. If the effective cross-sectional area of the piping (including valves and fittings, etc.) compared to the clearance between the collet nozzle and workpiece is small, the flow rate is determined by the effective cross-sectional area of the piping, and accordingly the flow rate difference between when suctioned and when not suctioned becomes small. In this instance, secure suction confirmation is enabled by making the effective cross-sectional area of the piping as large as possible, larger than the clearance between the collet nozzle and workpiece.

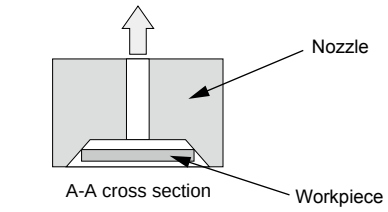

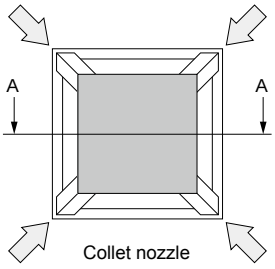

Leakage inspection (*1)

1 Calculation method of amount of leakage

When switching over from the pressure gauge calculation method, use the calculation for the amount of leakage.

$$Q=V\times\frac{\Delta P}{1.013\times10^5}\times\frac{60}{T}$$

Q: Amount of leakage (mL/min) ΔP: Differential pressure (Pa) V: Inner volume of workpiece (mL) T: Detection time (s)

Example) When a differential pressure of 20 Pa is generated in 5 seconds of detection time for a workpiece of inner volume of 500 mL, the amount of leakage is

$$Q=500\times\frac{20}{1.013\times10^5}\times\frac{60}{5}\approx1.18\ (\text{mL/min})$$

2 Ratio of amount of leakage between gas and liquid

Use this as a guideline during pneumatic leakage inspection of liquid workpieces.
Note that this formula is derived from the Hagen-Poiseuille equation with the condition that the pinhole is a circular pipe and has a smooth surface. Pinholes caused by poor welding, etc., may not always be applicable to the theoretical equation.

$$\frac{Ql}{Qa}=\frac{\eta a}{\eta l}\times\frac{101.3\times Pl}{(101.3+Pa/2)\times Pa}$$

Qa : Air leakage (mL/s)
Ql : Liquid leakage (mL/s)
ηa : Air viscosity (Pa·s)
ηl : Liquid viscosity (Pa·s)
Pa : Air test pressure (kPa)
Pl : Liquid test pressure (kPa)

● Viscosity coefficient (Pa·s x 10^{-3})

Temperature	Air (ηa)	Water (ηl)	Brake oil (ηl)
20°C	0.0181	1.00	26
50°C	0.0195	0.55	10
70°C	0.0204	0.40	7

● Ratio of air (20°C) and liquid leakage amount

Liquid		ηl, Pa·s	Pneumatics pressure Pa	Liquid pressure Pl	Ql/Qa
Water	20°C	0.001	0.4 MPa	0.4 MPa	0.006
Brake oil	50°C	0.01	0.4 MPa	0.4 MPa	0.0006
Brake oil	50°C	0.01	0.4 MPa	15 MPa	0.02

Example) When inspecting a workpiece with water leakage of 0.1 mL/min. (test pressure of 0.4 MPa) with air (test pressure 0.4 MPa), leakage Qa is as follows:

from $\frac{QL}{Qa}=0.006$ $Qa=\frac{0.1}{0.006}\approx16.7\ (\text{mL/min})$

MEMO



Dedicated for FSM, FSM-V Series
Miniature inline filter

FSM-VFM Series

RoHS CAD

Features

Inline filter dedicated for compact flow rate sensor RAPIFLOW FSM, FSM-V Series Due to the small inner volume, the high-speed response at suction confirmation is not affected.

- Miniature which stays out the way and helps save space
- Easy element replacement
- Polyamide resin with superior chemical resistance is used for the case material
- As the case is transparent, any dirt on the element can be checked from the outside

Specifications

Item		FSM-VFM-H22	FSM-VFM-H44	FSM-VFM-M55
Working fluid		Clean air (JIS B 8392-1:2012 (ISO 8573-1:2010) [1: 1: 1 to 5: 6: 2]), compressed air (JIS B 8392-1: 2012 (ISO 8573-1: 2010) [1: 1: 1 to 1: 6: 2]) *1		
Compatible tube O.D.		ø1.8 (fiber tube)	ø4 (push-in)	Port size M5
Proof pressure	MPa	0.75 (≈110 psi, 7.5 bar)		
Working pressure	MPa	-0.1 (≈-15 psi, -1 bar) to 0.5 (≈73 psi, 5 bar)		
Ambient temperature	°C	0 (32°F) to 50 (122°F)		
Material	Case	Polyamide		
	Element	Polypropylene, polyethylene		
Filtration rating	µm	10		
Weight	g	5.2	9.5	4.2
Recommended flow rate	L/min	10 *2		

*1 : Refer to page 1455 for the compressed air quality class according to JIS B 8392-1: 2012 (ISO 8573-1: 2010).
*2 : Because the pressure loss increases when the flow rate exceeds 10 L/min, use at 10 L/min or less.

How to order

FSM - VFM - H44 - B

Model No.

Ⓐ Tube O.D.

Ⓑ Attached

Code	Description
Ⓐ Tube O.D.	
H22	ø1.8 (fiber tube)
H44	ø4 (push-in)
M55	Port size M5
Ⓑ Attached	
Blank	Without bracket
B	Bracket attached

● Bracket part model No.

FSM - VFM - B

(cross-recessed flat head tapping screw M2.5 x 6: 1 pc.)

● Maintenance part model No.

FSM - VFM - E

(element: 5 pcs., fitting fixing pin: 1 pc.)

Clean-room specifications

(Catalog No. CB-033SA)

● Heat sealed into antistatic bag at clean bench (Class 1000 or higher).

FSM-VFM-.....- P70

Dimensions

● FSM-VFM-H22

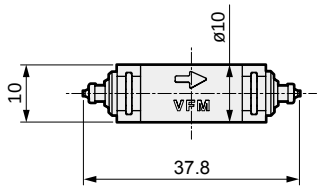

● FSM-VFM-H44

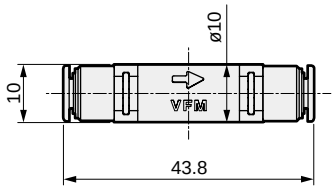

● FSM-VFM-M55

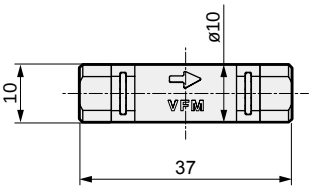

● FSM-VFM-B [Bracket]

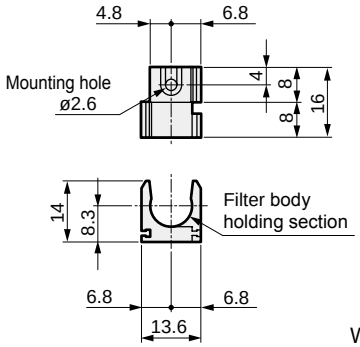

Weight: 2g

Flow characteristics (FSM-VFM-H44)

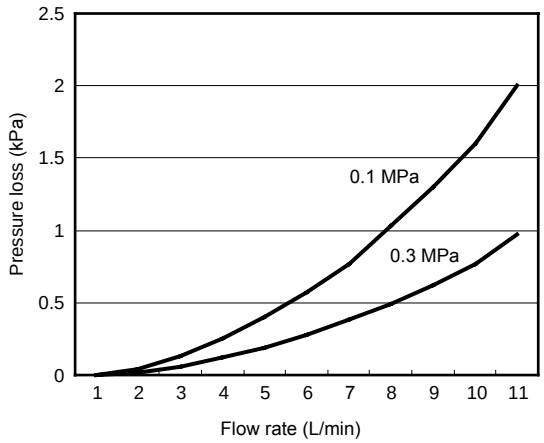

● When using the fiber tube, the pressure loss may increase depending on the piping conditions. Please be careful.

Caution

● This filter has orientation.
Use a check valve as a countermeasure against the outflow of dirt when used for suction confirmation, etc.

(Example of circuit)

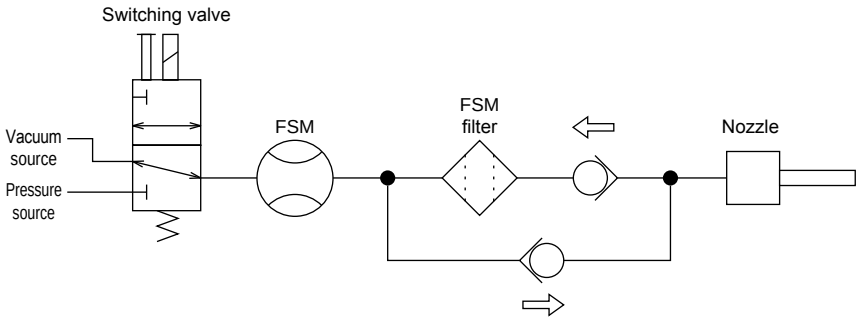

● Refer to page 1489 for other cautions and element replacement method.

Pneumatic components: Warning and Cautions

Be sure to read this section before use.
Refer to Intro Page 63 for precautions for general pneumatic components.

Product-specific cautions: Miniature flow rate sensor FSM-X/FSM-V Series

Design/selection

1. Working fluids

⚠ DANGER

■ Never use with a flammable fluid.

⚠ WARNING

■ This product cannot be used as a billing meter.
Do not use this product for commercial transactions as it is not compliant with the Measurement Act.
Intended applications include industrial sensors.

■ Do not use fluids other than the applicable fluids, because accuracy cannot be guaranteed.

■ As compressed air from the compressor contains drainage (water, oil oxides, foreign matter, etc.), install a filter, air dryer, and oil mist filter (micro alescer) on the primary side (upstream side) of the sensor. The sensor's mesh rectifies flow in the pipe. It does not filter out foreign matter, so provide a filter.

[Recommended circuit]

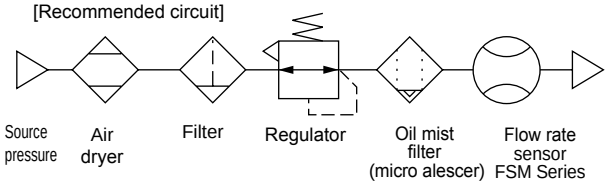

■ When using a valve on the primary side of the sensor, use only valves with oil-prohibited specifications. This sensor could malfunction or fail if exposed to splattering grease, oil, etc. As friction powder may be generated depending on the valve, mount a filter to prevent the powder from entering the sensor.

■ Use dry gas which does not contain corrosive elements such as chlorine, sulfur or acids, and which is clean and does not contain dust or oil mist.

■ Depending on the fluid, retaining the fluid for a long time could adversely affect the performance. Do not seal the fluid in the pipe for long periods of time.

2. Working environment

⚠ DANGER

■ Explosion-proof environments
Never use this product in an explosive gas atmosphere. The structure is not explosion-proof, and explosions or fires could occur.

⚠ WARNING

■ Corrosive environments
Do not use this product in an atmosphere containing corrosive gases such as sulfur dioxide.

■ Ambient / fluid temperatures
Use at ambient / fluid temperatures within the specified range of 0 to 50°C.
Even if the temperature is within the specified range, do not use this product if the ambient / fluid temperatures could suddenly change and cause dew to condense.

■ Working pressure/flow rate range
Applications exceeding the max. working pressure and specified flow rate range may result in faults.
Use this product only within the specified range.

■ Drip-proof environments
The degree of protection of this product is equivalent to IP40. Do not install this product where water, salt, dust, or swarf is present or in a pressurized or depressurized environment. The product cannot be used with large temperature variations or high temperature/ humidity since condensation may occur inside the body.

⚠ CAUTION

■ Working conditions for CE compliance
This product is CE-marked, indicating conformity with the EMC Directives. The standard for the immunity for industrial environments applied to this product is EN61000-6-2; the following requirements must be satisfied in order to conform to this standard:
Conditions

- The assessment of this product is performed by using a cable pairing a power supply line and a signal line, assessing this cable as a signal line.
- This product is not equipped with surge immunity. Implement surge protection measures on the system side.

3. Flow rate unit

⚠ CAUTION

■ This product's flow rate is measured at a mass flow rate unaffected by temperature or pressure. The unit is L/min., but this is the display when the mass flow rate is converted to volumetric flow rate at 20°C 1 barometric pressure (101 kPa) relative humidity 65%.

4. Proof pressure

⚠ CAUTION

■ Proof pressure differs depending on the series. Take note at selection.

5. Overflow

⚠ CAUTION

■ With each series, the sensor can handle an overflow double the measured range. If dynamic pressure is applied near the maximum working pressure (when pressure is applied to the primary side with the secondary side open), the sensor may operate abnormally. If dynamic pressure is applied, such as when a workpiece is filled for leakage inspection, provide a bypass circuit or restrictor so that dynamic pressure is not applied to the sensor.

6. Use for suction confirmation, etc.

⚠ CAUTION

- When this product is used to confirm suction, etc., select the flow rate range based on the operating vacuum pressure and suction nozzle.
  Refer to "Methods for calculating theoretical flow rate" on page 1478 for details.
- When this product is used to confirm suction, etc., provide an air filter (filtration rating 30 μm or less) upstream from suction to prevent the entry of foreign matter. (We recommend the miniature inline filter dedicated for FSM and FSM-V. Refer to page 1482 for details.)
- For FSM-V Series, when using the fiber tube model within the flow rate range of ±5 L/min, ±10 L/min, the pressure loss may increase and the required flow rate may not be attained depending on the working pressure. Please be careful.
- When this product is used to confirm suction, etc., consider the atmospheric dew point and the product's ambient temperature, and use the product under conditions in which dew does not condense in pipes.
- When this product is used to confirm suction, etc., response time may be delayed by the piping volume between the suction nozzle and this product. In this case, take countermeasures to reduce piping capacity.

When used for leakage inspection

- The working pressure range of this product is -0.09 to 0.2 MPa. If energized in a vacuum state of -0.09 MPa or less, the sensor's heat dissipation performance will suffer, leading to degradation of the sensor.
- When this product is used for vacuum applications such as air suction, do not bend the tube near the push-in fitting. If stress is applied to the tube near the push-in fitting, insert an insert ring into the tube, and connect the tube to the push-in fitting.
- When the suction confirmation sensor is switched from a pressure sensor (switch) to a flow rate sensor (switch), sensor output (switch output) logic will be reversed. (Refer to the figure below).
  Note that the PLC sequence program must be changed or revised.
  If source pressure or vacuum source is not supplied when device power is turned ON, "flow rate 0" = "sensor output (switch output) ON" status is set at the flow rate sensor (switch). Check that this is not a problem with the PLC sequence program, etc.

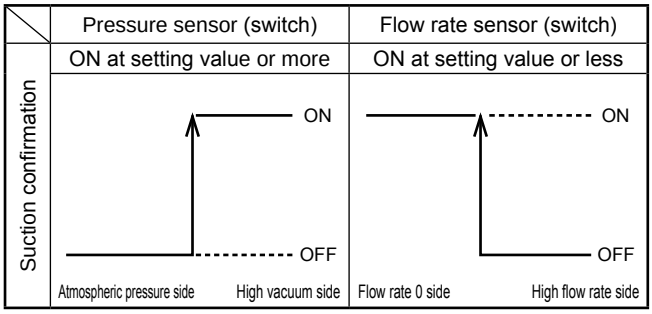

- FSM-X Series

· Because the flow rate-output characteristics may vary depending on the flow path structure, when preparing the flow path block, use after checking the actual flow rate-output characteristics.
· Depending on the fluid, retaining the fluid in the flow path for a long time could adversely affect performance. Do not seal the fluid in the pipe for long periods of time.

Mounting, installation and adjustment

Wiring

⚠ DANGER

- Use power supply voltage and output within the specified voltage.
  If voltage exceeding the specified voltage is applied, the sensor could malfunction or be damaged, or electrical shock or fire could occur.
  Do not use any load that exceeds the rated output. Otherwise, output damage or fire may result.

⚠ WARNING

- Check line color when wiring. As incorrect wiring could result in sensor damage and malfunctions, check wire color against the instruction manual before wiring.
- Ensure that wires are properly insulated.
  Check that wires do not come into contact with other circuits, that no ground faults occur, and that the insulator between terminals is not defective. Overcurrent could flow in and damage the sensor.
- Use a stabilized DC power supply within the specified rating that has been insulated from the AC power supply. A non-insulated power supply could result in electrical shock. If power is not stabilized, the peak value in summer could exceed the rating and damage the product or reduce precision.
- Stop the control device and equipment and turn power OFF before wiring. Starting operation suddenly could cause unpredictable and dangerous operation. Conduct an energized test with controls and machine devices stopped, and set target switch data. Be sure to discharge any accumulated electrostatic charge among personnel, tools, or equipment before and during work. Connect and wire bending resistant material, such as robot wire material for movable sections.
- Do not use at levels exceeding the power supply voltage range. If voltage exceeding this range or AC power is applied, the controller could rupture or burn.
- Install this product and wiring as far away as possible from sources of noise such as power distribution wires. Provide separate countermeasures for surge applied to the power cable.
- Do not short-circuit the load. Failure to observe this could result in rupture or burning.

Mounting, installation and adjustment

⚠CAUTION

■ The power supply for the metal body (stainless steel body, aluminum body) is a DC stabilized power supply completely isolated from the AC primary side. Connect either the + side or - side of the power to the FG. Between the metal body internal power circuit and metal body, a varistor (limit voltage approx. 40 V) is connected to prevent dielectric breakdown of the sensor. Do not conduct a withstand voltage test or insulation resistance test between the internal power circuit and metal body. Disconnect wiring first if this testing is required. An excessive potential difference between power and metal body will burn internal parts.
After installing, connecting and wiring the metal body, electrical welding of the equipment/frame or short-circuit accidents, etc., could cause welding current, excessive high voltage caused by welding, or surge voltage, etc., to run through the wiring, ground wire, or fluid path connected between such devices, damaging wires or devices. Conduct any work such as electrical welding after removing this device and disconnecting all electric wires connected to the FG.

Piping

⚠CAUTION

■ Before installation of piping and FSM-V, check the direction of arrow on the body and consider the fluid direction and switch operation.

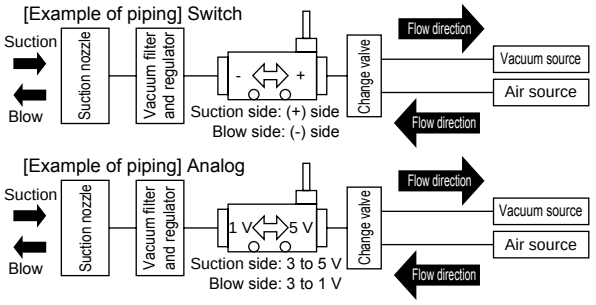

■ When installing the sensor on piping, refer to the torque below so that excessive screw-in torque or load torque is not applied to the connection port.

[Reference value]

Port thread	Tightening torque N·m
M5	0.5 to 1.0
Rc1/8(G1/8)	3 to 5
Rc1/4	6 to 8

■ Before installing piping, clean out the pipes using air blower to remove all foreign matter and cutting chips from the pipes. The rectifier or sensor chip could be damaged if a large amount of foreign matter, cutting chips, etc., enters.

■ Attach a wrench to metal sections when tightening pipes so that force is not applied to the resin section.

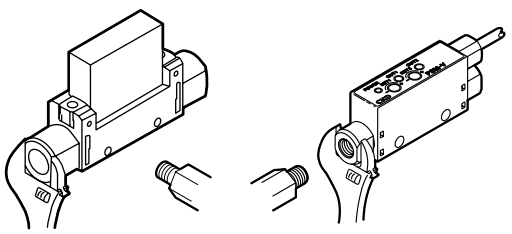

■ Make sure that no sealing tape or adhesive enters the pipes when connecting the piping.

When winding fluoro resin sealing tape around threads, wind the sealing tape once or twice, leaving 2 to 3 threads open at the end of the screw. Press the tape with your fingernail to stick it onto threads. When using liquid sealant, leave one to two threads open from the end, and avoid applying too much. Check that the sealant does not get on device threads.

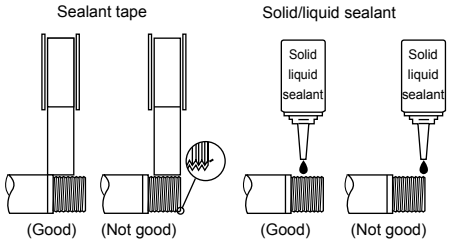

■ Be sure to connect a fitting even when using the metal body with the OUT side opened. The port filter could come off.

■ When using a push-in fitting, accurately insert tube and confirm that it cannot be pulled out. Cut the tube at a right angle with a dedicated cutter before use.

■ Connect the fiber tube with the following procedure ((1) to (5)).

(1) Set the collar at the very back.

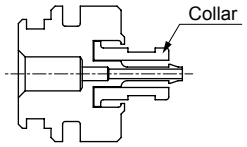

(2) Cut the end of fiber tube at a right angle.

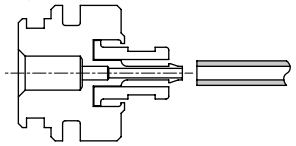

(3) Pass the collar through, and confirm that the fiber tube is correctly inserted while carrying out the work.

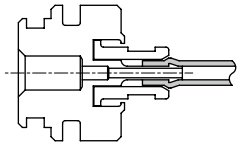

(4) Insert fiber tube completely to the end.

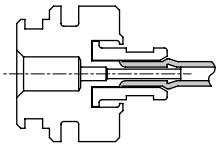

(5) Pull the collar forward to lock it.

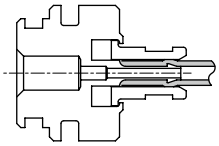

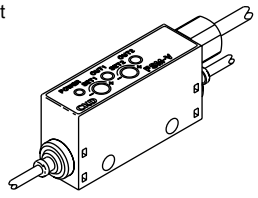

■ FSM-X

· Make sure that the lead wire is free of repeated bends and tension. Failure to do so could lead to disconnection.

· Make sure that no external force is applied to the connector section during use. The internal base or body may be deformed, resulting in output deviation or external leakage.

· The bi-direction (uni-direction) indicates 3 V (1 V) when the flow rate is 0, and changes to 5 V when the fluid flows to the right (when the lead wire is to the right of the body).

During adjustment

⚠CAUTION

■ If switches are operated when fluid is pulsating or flow rate is otherwise unstable, operation may be unstable. In this case, provide sufficient margin between the two setting values and avoid setting switches in an unstable area. Confirm that switch operation is stable before use.

■ When setting the FSM-V Series, switch output, use a flathead screwdriver corresponding to the trimmer groove (0.5W x 1.9L x 0.45D) or a Phillips screwdriver for 0 bit. The rotation range of the trimmer is 240 degrees. The trimmer could be damaged if turned any further or if turned forcibly.

Mounting

⚠CAUTION

■ This product can be installed in any direction; top, bottom, left, or right.

■ FSM-X Series

● For discrete sensor head
Install using the 2 through holes (ø2.3).

[Reference value]

Recommended port thread	Tightening torque N·m
M2	0.2 to 0.3

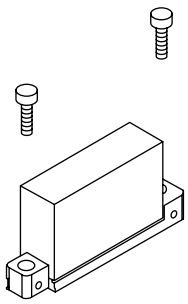

● For flow path block attached
Install using the 2 through holes (ø2).

[Reference value]

Recommended port thread	Tightening torque N·m
M1.6	0.2 to 0.3

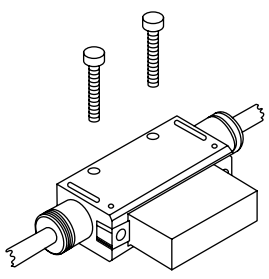

■ FSM-V Series

■ For discrete miniature flow rate sensor
Install using the 2 through holes (ø3.2) on the side.

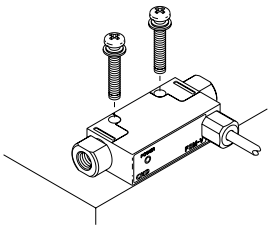

■ Separated display for common use of FSM-H-D □, FSM-V-D □
Mounting brackets/kits (sold separately) for installing and mounting the separated display are available.

Mounting bracket model No.: PPD3-KL-D : One-side mounting foot (L-shaped mounting)

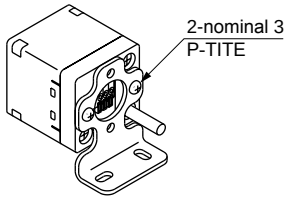

Mounting hole machining dimensions

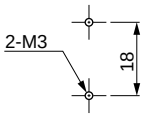

Mounting bracket model No.: PPD3-KD-D : Two-side mounting foot (parallel mounting)

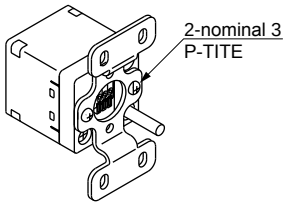

Mounting hole machining dimensions

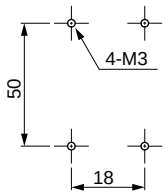

Mounting bracket model No.: PPD3-KHS-D : Panel mounting bracket set, with panel cover

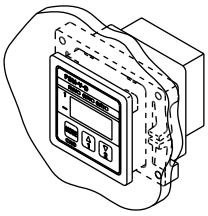

Mounting hole machining dimensions

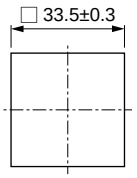

Mounting bracket model No.: PPD3-KC : Operation protective cover

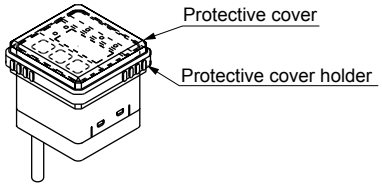

Use/maintenance

⚠WARNING

- Output accuracy is affected by temperature characteristics and heat generated when energized. Provide sufficient stand-by time (5 minutes or more after energizing) before use.
- Immediately after power is turned ON, this product does not start flow rate detection switch operation for approx. 2 seconds to complete self-diagnosis. Provide a control circuit/program that ignores signals for at least two seconds after power is turned ON.

⚠CAUTION

- If a problem occurs during operation, immediately turn the power OFF, stop use, and contact your dealer.
- Keep this product's flow rate within the rated flow range.
- Use this product within the working pressure.
- When changing the output set value, turn OFF the equipment first in order to prevent unexpected operation in the control system equipment.
- The accuracy may vary from the initial status depending on the working environment or working conditions. It is recommended to check the operation of the product periodically.
- Do not disassemble or modify, as this may cause malfunction.
- The case is made of resin. Do not use solvent, alcohol or detergent in cleaning, since the resin could absorb it. There is a risk of affecting the resin. Wipe off dirt with a rag soaked in a diluted neutral detergent solution and wrung out well.
- Pay attention to the reverse current caused by disconnected wires/wiring resistance. If other devices, including a flow rate sensor, are connected to the same power supply as the flow rate sensor, and the switch output wire and power cable negative (-) side are short-circuited to check the operation of the control panel input unit, or if the power cable negative (-) side is disconnected, reverse current could flow to the flow rate sensor's switch output circuit and cause damage.

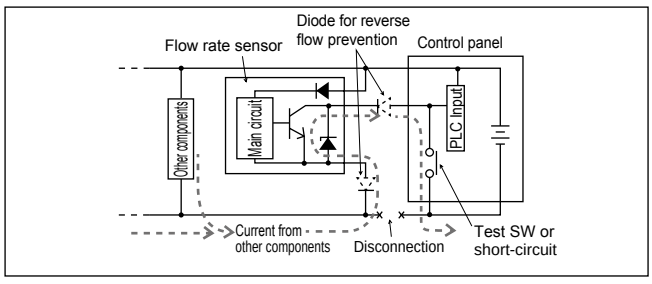

Take the following measures to prevent damage caused by reverse current:

(1) Avoid centralizing current at the power cable, especially the minus side power cable, and use as thick a cable as possible.
(2) Limit the number of devices connected to the same power source as the flow rate sensor.
(3) Insert a diode parallel to the flow rate sensor's output line to prevent reverse current.
(4) Insert a diode parallel to the flow rate sensor power wire's negative (-) side to prevent reverse current.

- Pay attention to surge current leading.

When flow rate sensor power is shared with an inductive load that generates surges, such as a solenoid valve or relay, if the circuit is cut off while the inductive load is functioning, surge current could enter the switch output circuit and cause damage depending on where the surge absorbing element is installed.

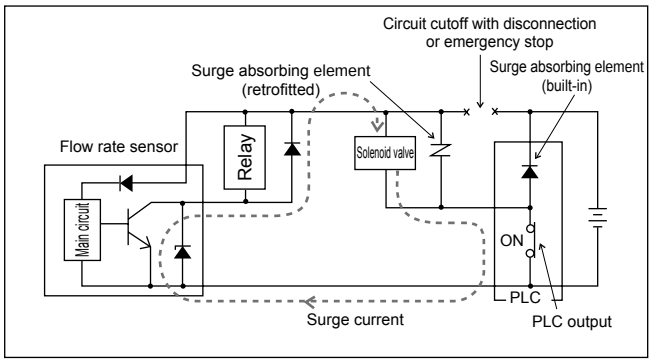

Take the measures below to prevent damage from sneak surge current.

(1) Separate the power supply for output including the inductive load, such as the solenoid valve and relay, and input, such as the flow rate sensor.
(2) If a separate power supply cannot be used, directly install a surge absorption element for all inductive loads. Consider that the surge absorption element connected to the PLC, etc., protects only the individual device.
(3) Connect a surge absorption element to places on the power wiring shown in the figure below, as a measure against disconnections in unspecified areas.

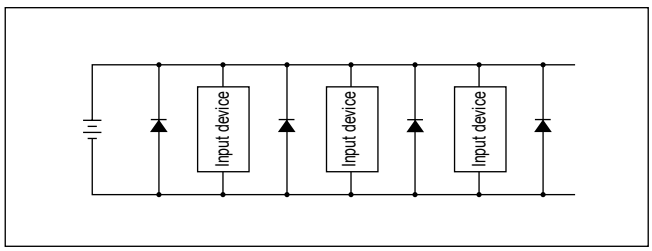

When the devices are connected to a connector, the output circuit could be damaged by the above phenomenon if the connector is disconnected while the power is ON. Turn power OFF before connecting or disconnecting the connector.

■ Analog output continues even if the flow rate range is exceeded.
Displayed is the “Hi” display.
Note that this is outside the guaranteed precision.
Analog output continues even if the flow is reversed. (Note that this is outside the guaranteed precision. Excluding FSM-V Series.) When confusion with the forward direction signal occurs, use the PLC sequence program to avoid trouble.

Product-specific cautions: Miniature inline filter FSM-VFM Series

Use/maintenance

⚠ CAUTION

■ Do not use this product for vacuum circuits that could come in contact with acids, alkalis, carboxylic acids, other organic compounds, screw-lock agents, solvents, alcohol solutions, or air containing these substances.
The body may be damaged, which is dangerous.

■ Use the designated tube and plastic plug.
Tube outer diameter accuracy
· Polyamide tube.....Within ±0.1 mm
· Polyurethane tube
(ø6 or less).....Within ±0.1 mm
(ø8 and over).....Within $^{+0.1}_{-0.15}$ mm

CKD recommended model No.

Plastic plug	GWP * -B Series
Soft nylon tube	F15** Series
Polyurethane tube	U95** Series
New urethane tube	NU-04 and 06 Series

■ For cautions regarding push-in fittings, also read “Safety precautions for fittings/tubes”.

■ To check the polyamide case for cracks, damage, and other deterioration, perform periodical inspection/cleaning/replacement.

■ As a clogged filter element may cause degradation of the vacuum source, perform periodical inspection/cleaning/replacement of the element.

■ When the body is detached to clean or replace the filter element, the bowl pressure must be reduced to atmospheric pressure before starting work.
Because the flow direction has orientation, check the arrow display on the body before reassembly.
After reassembly, check if the required degree of vacuum is reached.

■ Rinse the body with water after washing with household neutral detergent.

■ If small objects with small particle diameter such as dust during the suction enter the flow path, the foreign matter may flow to the secondary side without being filtered.
Select a filter suited to the purpose.

Element replacement method

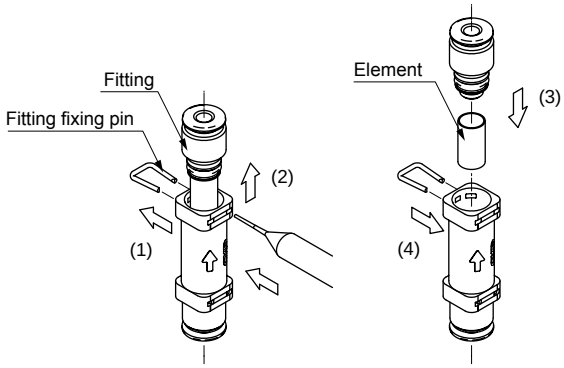

(1) Remove the fitting fixing pin using a jig with a pointed tip, etc. (Make sure not to lose the fitting fixing pin because it will be used again.)
(2) Pull out the fitting.
(3) Replace the element and push in the fitting.
(4) Push in the fitting fixing pin to fix the fitting.

Compact flow rate controller

RAPIFLOW FCM

■ **Sensor/controller/flow rate controller**



CONTENTS

Product introduction	1492
Applications	1494
Series variation	1495
● FCM	1496
Wiring method	1505
Description of functions and operation	1507
FCM Glossary	1523
⚠ Safety precautions	1524

Compact, high speed, multifunction solution

High speed micro machined sensor chip incorporated

Microcomputer attains high accuracies and multi-functions



Stainless steel body

■ Applicable fluids/Flow rates

AIR N_2
0.015 to 50 L/min.

Ar
0.015 to 50 L/min.

O_2 13A CH_4 C_3H_8
0.015 to 10 L/min.

H_2 He
0.06 to 20 L/min.

■ Weight/approx. 480 g

Rectifier mechanism improves low pressure loss and repeatability

Resin body

■ Applicable fluids/Flow rates

AIR N_2
0.015 to 100 L/min.

■ Weight/approx. 200 g

Ultimate ideal multi-function flow controller

Compact flow rate controller RAPIFLOW FCM

RAPIFLOW FCM Series

Merging the small size flow sensor FSM and small solenoid valve technologies. The small size flow controller FCM Series is equipped with sensor functions, proportional control functions and valve functions, all of which have high performance and economic efficiency. This series supports various applications.

Compatible with various fluids

This series supports various gases including air, nitrogen, argon, oxygen, methane and propane. The new series is compatible with hydrogen and helium, allowing use with a variety of applications.

New low differential pressure model

Now capable of controlling burner flame or other fuel gases with low supply pressure.

Compact and light weight

The size is just 70H × 70D × 30W.
Install in a confined space or on a moving place to downsize and lighten your system.

Volume reduction compared to previous model (approx) **30%**

Weight reduction compared to previous model (approx) **20%**



0.5 second high speed control

The platinum sensor chip using silicone micro machining achieves 0.5 second high speed control, enabling use in various applications.

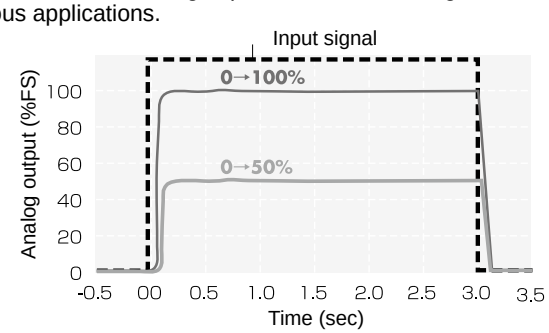

Dedicated power supply not required

A 24 VDC power voltage allows operation with general-purpose single supplies.

Highly reliable flow control

CKD's original rectifier control enhances the repeatability affecting flow controllability.

Repeatability	±1% FS
Precision	±3% FS

Digital display shows the control state at a glance

- The flow value is displayed digitally with three digits.
- The output state (switch output ON-OFF) is displayed in addition to the error display.

A top/bottom reversed display can be selected according to the installation direction (option)

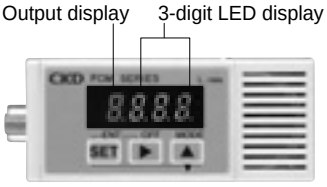

Parallel input type available as a standard

Controllable with parallel input(ON/OFF signal for PLC,10-bit resolution 1024). An analog input/output device, such as a D/A converter, is no longer needed.



Multi functions with microcomputer

● **Error display function**
Errors are displayed and notified with electrical signals.

● **Zero/span adjustment function**
Zero and span can be adjusted according to the usage methods.

● **Preset input function**
Flow rate can be adjusted by setting 4 random flow rate points with 2-bit signal inputs from an external source (signals from PLC, etc.).

● **Direct memory function**
Control flow rate can flexibly be adjusted with the product's operation keys even without input signals from an external source.

● **Switch output function**
A switch output function using the flow rate's upper/lower limit settings is incorporated. (Built-in overcurrent protection)

● **Flow rate integrating function**
Integral display of the flow rate (max. 6 digits) and pulse outputs for integration are possible.

● **Automatic shutoff function**
The valves are automatically shut off in an emergency, such as when an error occurs.

Used in various fields

RAPIFLOW is available for a wide variety of applications in industries such as machinery, automobiles and precision components, cutting-edge fields such as semiconductors and biotechnology, medical care, foodstuff, and more.

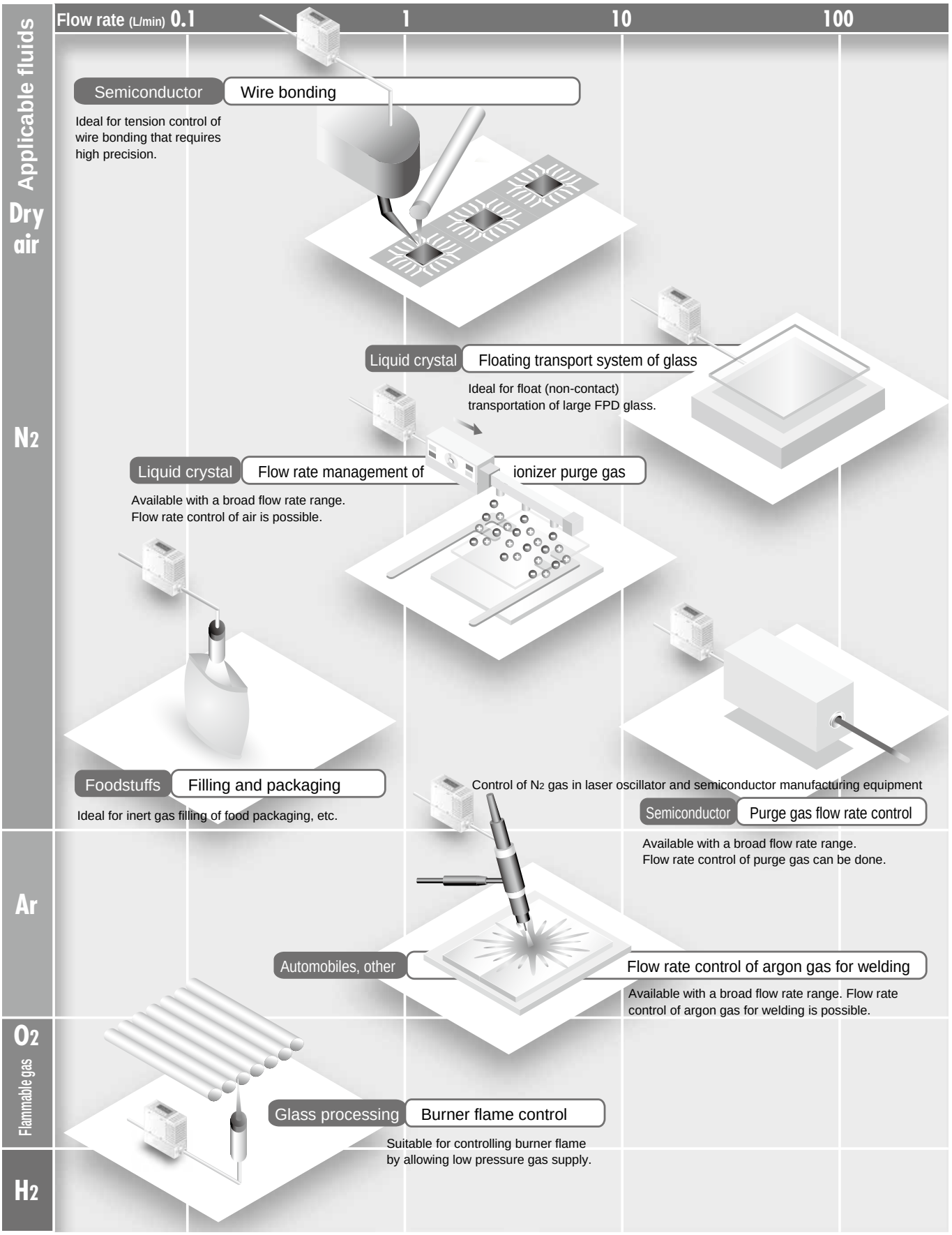

Applicable fluids/flow rate control range

	Model No.	Applicable fluids	Flow rate control range (L/min) 0.01 0.1 1 10 100		Body material	Port size
Air	FCM-9500 AI	AIR Air, N2 Nitrogen		0.015 to 0.5	Resin / SUS	Resin: ø6 push-in, ø8 push-in; SUS: Rc1/4, 9/16-18 UNF
	FCM-0001 AI			0.03 to 1		
	FCM-0002 AI			0.06 to 2		
	FCM-0005 AI			0.15 to 5		
	FCM-0010 AI			0.3 to 10		
	FCM-0020 AI			0.6 to 20		
	FCM-0050 AI			1.5 to 50		
	FCM-0100 AI (resin only)			3 to 100		
Gas	FCM-9500 AR	Ar Argon		0.015 to 0.5	SUS	Rc1/4, 9/16-18 UNF
	FCM-0001 AR			0.03 to 1		
	FCM-0002 AR			0.06 to 2		
	FCM-0005 AR			0.15 to 5		
	FCM-0010 AR			0.3 to 10		
	FCM-0020 AR			0.6 to 20		
	FCM-0050 AR			1.5 to 50		
Gas	FCM-9500 O2/LN/C1/C3	O2 Oxygen, 13A City gas, CH4 Methane, C3H8 Propane		0.015 to 0.5	SUS	Rc1/4, 9/16-18 UNF
	FCM-0001 O2/LN/C1/C3			0.03 to 1		
	FCM-0002 O2/LN/C1/C3			0.06 to 2		
	FCM-0005 O2/LN/C1/C3			0.15 to 5		
	FCM-0010 O2/LN/C1/C3			0.3 to 10		
Gas	FCM-0002 H2/HE	H2 Hydrogen, He Helium		0.06 to 2	SUS	Rc1/4, 9/16-18 UNF, 1/4" Double barbed fitting, 1/4" JXR male fitting
	FCM-0005 H2/HE			0.15 to 5		
	FCM-0010 H2/HE			0.3 to 10		
	FCM-0020 H2/HE			0.6 to 20		

I/O specifications

Input	Model No.	Output		
Input signal: Specifications		Output method	Specifications	Error output
Analog: 0 to 10 V	FCM-□-□0AN	Analog	1 to 5 V	NPN
	FCM-□-□0AP			PNP
bit Preset: 4 points (2 bit) (Note)	FCM-□-□0SN	NPN PNP Switch	NPN	NPN
	FCM-□-□0SP		PNP	PNP
Analog: 0 to 5 V	FCM-□-□1AN	Analog	1 to 5 V	NPN
	FCM-□-□1AP			PNP
bit Preset: 4 points (2 bit) (Note)	FCM-□-□1SN	NPN PNP Switch	NPN	NPN
	FCM-□-□1SP		PNP	PNP
Analog: 4 to 20 mA	FCM-□-□2AN	Analog	1 to 5 V	NPN
	FCM-□-□2AP			PNP
bit Preset: 4 points (2 bit) (Note)	FCM-□-□2SN	NPN PNP Switch	NPN	NPN
	FCM-□-□2SP		PNP	PNP
bit Parallel: 10 bit	FCM-□-□PAN	Analog	1 to 5 V	NPN
	FCM-□-□PAP			PNP
	FCM-□-□PSN	NPN PNP Switch	NPN	NPN
	FCM-□-□PSP		PNP	PNP

(Note) Preset 8 points (3 bit) input is available custom made. (In this case, the external integration reset signal input function cannot be used.) Contact CKD for details.

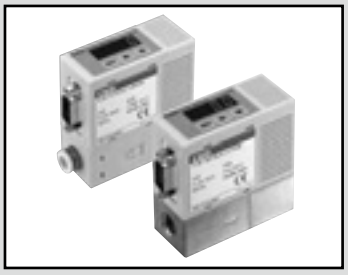

Compact flow rate controller
RAPIFLOW

FCM Series

- For air, nitrogen, argon, oxygen, city gas, methane, propane (flow rate range: 0.5 to 100 L/min)
- Hydrogen, helium (flow rate range: 0 to 20 L/min)

RoHS CAD

■ FCM Series for air, nitrogen, argon, oxygen, city gas, methane, propane

Specifications

1 MPa = 10 bar

Item					FCM-[*1] [*2]-[*3] [*4] [*5]						
Valve drive method					Proportional solenoid valve When not energized: Closed						
					Full scale flow rate	AI (Air, nitrogen)	AR (Argon)	O2 (Oxygen)	LN (City gas)	C1 (Methane)	C3 (Propane)
Flow rate range Note 1	*1	Standard model	9500		500 mL/min	●	●	●	●	●	●
			0001		1 L/min	●	●	●	●	●	●
			0002		2 L/min	●	●	●	●	●	●
			0005		5 L/min	●	●	●	●	●	●
			0010		10 L/min	●	●	●	●	●	●
			0020		20 L/min	●	●				
			0050		50 L/min	●	●				
			0100		100 L/min (resin)	●					
		Low diff press model (SS)	L9500		500 mL/min	●		●	●	●	●
			L0001		1 L/min	●		●	●	●	●
			L0002		2 L/min	●		●	●	●	●
			L0005		5 L/min	●		●	●	●	●
			L0010		10 L/min	●		●	●	●	●
Applicable fluids Note 2	*2		AI		Compressed air, nitrogen	●					
			AR		Argon		●				
			O2		Oxygen (oil-prohibited specifications)			●			
			LN		City gas (13A) Note 3				●		
			C1		Methane (CH4 100%)					●	
			C3		Propane (C3H8 100%)						●
Port size, Body material	*3		H6		ø6 push-in, resin (excluding 50, 100 L/min)	●					
			H8		ø8 push-in, resin	●					
			8A		Rc 1/4, stainless steel	●	●	●	●	●	●
			UF		9/16-18UNF, stainless steel	●	●	●	●	●	●
Control	Guaranteed accuracy range				3 to 100% F.S.						
	Response time	*1			9500 to 0020,L9500 to L0010	Within 0.5 sec. to setting ±5% F.S. (TYP.)					
					0050 to 0100	Within 1 sec. to setting ±5% F.S. (TYP.)					
	Accuracy				Within ±3% F.S.						
	Repeatability				Within ±1% F.S.						
	Temperature characteristics				Within ±0.2% F.S./°C (25°C (77°F) reference)						
	Pressure characteristics				Within ±1% F.S. per 98 kPa (≈14 psi) (standard differential pressure reference)						
Pressure	Standard differential pressure Note 4				Refer to the separate table						
	Operating differential pressure range Note 5				Refer to the separate table						
	Max. working pressure Note 5				Refer to the separate table						
	Proof pressure	*3			H6/H8 (Resin body)	490 kPa (≈71 psi, 4.9 bar)					
					8A/UF (SUS body)	980 kPa (≈140 psi, 9.8 bar)					
Operating ambient temperature, humidity					0 (32°F) to 50°C (122°F), 90% RH or less (no condensation)						
I/O	Input signal/ Preset input	*4			0	0 to 10 VDC (6.7 kΩ) / 4 points (2 bit)					
					1	0 to 5 VDC (10 kΩ) / 4 points (2 bit)					
					2	4 to 20 mADC (250 Ω) / 4 points (2 bit)					
					P	Parallel 10 bit/none					
	Output signal	*5			AN	Analog output: 1 to 5 V (connecting load impedance 500 kΩ and over) Error output: NPN open collector output, 50 mA or less, voltage drop 2.4 V or less					
					AP	Analog output: 1 to 5 V (connecting load impedance 500 kΩ and over) Error output: PNP open collector output, 50 mA or less, voltage drop 2.4 V or less					
					SN	Switch output: NPN open collector output, 50 mA or less, voltage drop 2.4 V or less Error output: NPN open collector output, 50 mA or less, voltage drop 2.4 V or less					
					SP	Switch output: PNP open collector output, 50 mA or less, voltage drop 2.4 V or less Error output: PNP open collector output, 50 mA or less, voltage drop 2.4 V or less					
Flow rate display	Display method				7-segment LED 3-digit, indicator accuracy: control accuracy ±1 digit						
	Display range, display resolution				Refer to the separate table						
Integrating functions					Refer to the separate table						
Power supply	Power supply voltage				24 VDC ± 10% (stabilized power supply with ripple rate 2% or less)						
	Current consumption Note 11				250mA or less						
Mounting orientation					Unrestricted in vertical/horizontal direction						
Wetted section materials		*3			H6/H8 (Resin body)	Polyamide resin, fluoro rubber, stainless steel, alumina, semiconductor silicon, soldering					
					8A/UF (SUS body)	Stainless steel, fluoro rubber, alumina, semiconductor silicon, soldering					
Weight		*3			H6/H8 (Resin body)	Approx. 200g					
					8A/UF (SUS body)	Approx. 480g					
Degree of protection					IEC standards IP40 or equivalent						
Protection circuit Note 6					Power reverse connection protection, switch output reverse connection protection, switch output load short-circuit protection						
EMC Directive					EN55011,EN61000-6-2,EN61000-4-2/3/4/6/8						

Pressure

Standard differential pressure, operating differential pressure Note 4, Note 5

(Standard model)

1 MPa ≈ 145.0 psi, 1 MPa = 10 bar

			Flow rate range *1							
			9500	0001	0002	0005	0010	0020	0050	0100
Applicable fluids *2	AI	Std diff press (kPa)	50	100	100	100	100	150	200	300
		Operating diff press (kPa)	20 to 150	50 to 200	50 to 250	50 to 250	50 to 250	100 to 300	150 to 300	250 to 350
		Max. working pressure (kPa)	150	200	250	250	250	300	300	350
	AR	Std diff press (kPa)	50	100	100	100	100	150	200	
		Operating diff press (kPa)	20 to 150	50 to 200	50 to 250	50 to 250	50 to 250	100 to 300	150 to 300	
		Max. working pressure (kPa)	150	200	250	250	250	300	300	
	O2	Std diff press (kPa)	50	100	100	100	100			
		Operating diff press (kPa)	20 to 150	50 to 200	50 to 250	50 to 250	50 to 250			
		Max. working pressure (kPa)	150	200	250	250	250			
	LN/C1	Std diff press (kPa)	50	50	50	50	50			
		Operating diff press (kPa)	20 to 150	20 to 150	20 to 150	20 to 150	30 to 150			
		Max. working pressure (kPa)	150	150	150	150	150			
	C3	Std diff press (kPa)	50	50	50	50	50			
		Operating diff press (kPa)	20 to 150	20 to 150	20 to 150	20 to 150	30 to 150			
		Max. working pressure (kPa)	150	150	150	150	150			

(Low differential pressure model)

1 MPa = 10 bar

			Flow rate range *1				
			L9500	L0001	L0002	L0005	L0010
Applicable fluids *2	AI/O2 LN/C1 C3 Note 7	Std diff press (kPa)	20 (≈2.9 psi)	20 (≈2.9 psi)	20 (≈2.9 psi)	20 (≈2.9 psi)	20 (≈2.9 psi)
		Operating diff press (kPa)	5 (≈0.8 psi) to 50 (≈7.2 psi)	5 (≈0.8 psi) to 50 (≈7.2 psi)	5 (≈0.8 psi) to 50 (≈7.2 psi)	5 (≈0.8 psi) to 50 (≈7.2 psi)	10 (≈1.5 psi) to 50 (≈7.2 psi)
		Max. working pressure (kPa)	50 (≈7.2 psi)	50 (≈7.2 psi)	50 (≈7.2 psi)	50 (≈7.2 psi)	50 (≈7.2 psi)

Display, integrating functions

		Flow rate range *1							
		9500 L9500	0001 L0001	0002 L0002	0005 L0005	0010 L0010	0020	0050	0100
Flow rate display Note 12	Display range	0 to 500 mL/min	0.00 to 1.00 L/min	0.00 to 2.00 L/min	0.00 to 5.00 L/min	0.0 to 10.0 L/min	0.0 to 20.0 L/min	0.0 to 50.0 L/min	0 to 100 L/min
	Display resolution	1 mL/min	0.01 L/min	0.01 L/min	0.01 L/min	0.1 L/min	0.1 L/min	0.1 L/min	1 L/min
Integrating functions Note 10	Display range	999999 mL	9999.99 L	9999.99 L	9999.99 L	99999.9 L	99999.9 L	99999.9 L	999999 L
	Display resolution	1 mL	0.01 L	0.01 L	0.01 L	0.1 L	0.1 L	0.1 L	1 L
	Pulse output rate	5 mL	0.01 L	0.02 L	0.05 L	0.1 L	0.2 L	0.5 L	1 L

Note 1: The value converted to volumetric flow rate at standard condition (20°C 1 barometric pressure (101 kPa) relative humidity 65%). Full scale stands for max. scale flow rate in the flow rate range.

Note 2: Use dry gas which does not contain corrosive elements such as chlorine, sulfur or acids, and which is clean and does not contain dust or oil mist.
When using compressed air, use clean air compliant with JIS B8392-1: 2012 (ISO 8573-1: 2010) [1: 1: 1 to 1: 6: 2]. Compressed air from the compressor contains drainage-water, oil oxide, foreign substances, etc. To maintain the function of this product, install a filter, air dryer (min. pressure dew point 10˚C or less), and oil mist filter (max. oil content 0.1 mg/m^3) on the primary side (upstream side) of this product.

[Recommended circuit]

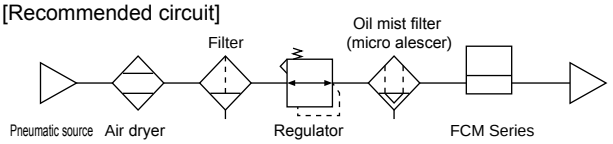

[Recommended device]
Air filter: F series
Oil mist filter: M series

Note 3: The value for city gas 13A is a value for methane (CH_4) 88% gas generated from LNG.

Note 4: Standard differential pressure is the differential pressure when this product is calibrated. (Secondary side released to atmosphere)

Note 5: Operating differential pressure is the differential pressure required for normal operation of this product. Note that the values depend on the flow rate range and applicable fluids.
The min. value of operating differential pressure is the differential pressure required for the full scale flow rate to flow when secondary side is released to atmosphere.
The max. working pressure (max. value of operating differential pressure) is the max. value of primary side pressure. If more pressure is applied, control may become unstable, or the max. flow rate may not be controllable.

Note 6: This product's protection circuit is effective only for specific misconnections and load short-circuits. It does not provide protection for all misconnections.

Note 7: When using a low pressure city gas line (1 to 2.5 kPa), the operating differential pressure range is exceeded.

Note 8: The valve inside this product cannot be used as a stop valve requiring zero leakage. Slight leakage is allowed for in the specifications.

Note 9: The output impedance of the analog output voltage section is approx. 1 kΩ. If the impedance of the connecting load is small, output and error increase. Check error with the impedance of the connecting load before using.

Note 10: The integrating flow is a reference value. It is reset when the power is turned OFF.

Note 11: Current for when 24 VDC is connected, no load is applied, and flow rate is full scale. The current consumption will vary depending on the load.

Note 12: The flow rate display is rounded off at approx. 1% F.S. or less (forced zero).

■ FCM Series for hydrogen, helium

Specifications

1 MPa ≈ 145.0 psi, 1 MPa = 10 bar

Item				FCM-[*1] [*2]-[*3] [*4] [*5]		
Valve drive method				Proportional solenoid valve When not energized: Closed		
				Full scale flow rate	H2 (Hydrogen)	HE (Helium)
Flow rate range Note 1		*1	0002	2 L/min	●	●
			0005	5 L/min	●	●
			0010	10 L/min	●	●
			0020	20 L/min	●	●
Applicable fluids Note 2		*2	H2	Hydrogen	●	
			HE	Helium		●
Port size		*3	8A	Rc1/4	●	●
			UF	9/16-18UNF	●	●
			4S	1/4" double barbed fitting	●	●
			4RM	1/4" JXR male fitting	●	●
Control	Guaranteed accuracy range				3 to 100% F.S.	
	Response time			*1	Within 0.5 sec. to setting ±5% F.S. (TYP.)	
	Accuracy				Within ±3% F.S.	
	Repeatability				Within ±1% F.S.	
	Temperature characteristics				Within ±0.2% F.S./°C (25°C (77°F) reference)	
	Pressure characteristics				Within ±1% F.S. per 98 kPa (≈14 psi) (standard differential pressure reference)	
Pressure	Standard differential pressure			Note 3	Refer to the separate table	
	Operating differential pressure range			Note 4	Refer to the separate table	
	Max. working pressure			Note 4	Refer to the separate table	
	Proof pressure				980 kPa (≈140 psi, 9.8 bar)	
Operating ambient temperature, humidity					0 (32°F) to 50°C (122°F), 90% RH or less (no condensation)	
External leakage					1 x 10^{-6} Pa·m^3/s or less (helium leakage rate)	
I/O	Input signal/ Preset input	*4	0		0 to 10 VDC (6.7kΩ) / 4 points (2 bit)	
			1		0 to 5 VDC (10kΩ) / 4 points (2 bit)	
			2		4 to 20 mADC (250 Ω) / 4 points (2 bit)	
			P		Parallel 10 bit/none	
	Output signal	*5	AN		Analog output: 1 to 5 V (connecting load impedance 500 kΩ and over) Error output: NPN open collector output, 50 mA or less, voltage drop 2.4 V or less	
			AP		Analog output: 1 to 5 V (connecting load impedance 500 kΩ and over) Error output: PNP open collector output, 50 mA or less, voltage drop 2.4 V or less	
			SN		Switch output: NPN open collector output, 50 mA or less, voltage drop 2.4 V or less Error output: NPN open collector output, 50 mA or less, voltage drop 2.4 V or less	
			SP		Switch output: PNP open collector output, 50 mA or less, voltage drop 2.4 V or less Error output: PNP open collector output, 50 mA or less, voltage drop 2.4 V or less	
Flow rate display	Display method				7-segment LED 3-digit, indicator accuracy: control accuracy ±1 digit	
	Display range, display resolution				Refer to the separate table	
Integrating functions					Refer to the separate table	
Power supply	Power supply voltage				24 VDC ± 10% (stabilized power supply with ripple rate 1% or less)	
	Current consumption			Note 9	270 mA or less	
Mounting orientation					Unrestricted in vertical/horizontal direction	
Wetted section materials					Stainless steel, fluoro rubber, alumina, semiconductor silicon, soldering	
Weight		*3	8A/UF		Approx. 480 g	
			4S/4RM		Approx. 560 g	
Degree of protection					IEC standards IP40 or equivalent	
Protection circuit				Note 5	Power reverse connection, switch output reverse connection, switch output load short-circuit	
EMC Directive					EN55011,EN61000-6-2,EN61000-4-2/3/4/6/8	

Pressure

Standard differential pressure, operating differential pressure

1 MPa = 10 bar

			Flow rate range *1			
			0002	0005	0010	0020
Applicable fluids *2	H2	Std diff press (kPa)	20 (≈2.9 psi, 0.2 bar)	50 (≈7.3 psi, 0.5 bar)	50 (≈7.3 psi, 0.5 bar)	50 (≈7.3 psi, 0.5 bar)
		Operating diff press (kPa)	10 (≈1.5 psi) to 50 (≈7.2 psi)	30 (≈4.4 psi) to 80 (≈12 psi)	30 (≈4.4 psi) to 80 (≈12 psi)	30 (≈4.4 psi) to 80 (≈12 psi)
		Max. working pressure (kPa)	50 (≈7.2 psi, 0.5 bar)	80 (≈12 psi, 0.8 bar)	80 (≈12 psi, 0.8 bar)	80 (≈12 psi, 0.8 bar)
	HE	Std diff press (kPa)	50 (≈7.3 psi, 0.5 bar)	100 (≈15 psi, 1 bar)	100 (≈15 psi, 1 bar)	100 (≈15 psi, 1 bar)
		Operating diff press (kPa)	20 (≈3 psi) to 100 (≈15 psi)	50 (≈7.3 psi) to 150 (≈22 psi)	50 (≈7.3 psi) to 150 (≈22 psi)	50 (≈7.3 psi) to 150 (≈22 psi)
		Max. working pressure (kPa)	100 (≈15 psi, 1 bar)	150 (≈22 psi, 1.5 bar)	150 (≈22 psi, 1.5 bar)	150 (≈22 psi, 1.5 bar)

Display, integrating functions

		Flow rate range *1			
		0002	0005	0010	0020
Flow rate display Note 10	Display range	0.00 to 2.00 L/min	0.00 to 5.00 L/min	0.0 to 10.0 L/min	0.0 to 20.0 L/min
	Display resolution	0.01 L/min	0.01 L/min	0.1 L/min	0.1 L/min
Integrating functions	Display range	9999.99 L	9999.99 L	99999.9 L	99999.9 L
	Display resolution	0.01 L	0.01 L	0.1 L	0.1 L
Note 8	Pulse output rate	0.02 L	0.05 L	0.1 L	0.2 L

Note 1: Flow rate converted to volumetric flow rate at 20°C, 1 barometric pressure (101 kPa). Full scale stands for max. scale flow rate in the flow rate range.
Note 2: Use dry gas which does not contain corrosive elements such as chlorine, sulfur or acids, and which is clean and does not contain dust or oil mist.
Note 3: Standard differential pressure is the differential pressure when this product is calibrated. (Secondary side released to atmosphere)
Note 4: Operating differential pressure is the differential pressure required for normal operation of this product. Note that the values depend on the flow rate range and applicable fluids.
The min. value of operating differential pressure is the differential pressure required for the full scale flow rate to flow when secondary side is released to atmosphere. The max. working pressure (max. value of operating differential pressure) is the max. value of primary side pressure. If more pressure is applied, control may become unstable, or the max. flow rate may not be controllable.
Note 5: This product's protection circuit is effective only for specific misconnections and load short-circuits. It does not provide protection for all misconnections.
Note 6: The valve inside this product cannot be used as a stop valve requiring zero leakage. Slight leakage is allowed for in the specifications.
Note 7: The output impedance of the analog output voltage section is approx. 1 kΩ. If the impedance of the connecting load is small, output and error increase. Check error with the impedance of the connecting load before using.
Note 8: The integrating flow is a calculated (reference) value. It is reset when the power is turned OFF.
Note 9: Flow rate for when 24 VDC is connected, no load is applied, and flow rate is full scale. The current consumption will vary depending on the load.
Note 10: The flow rate display is rounded off at approx. 1% F.S. or less (forced zero).

■ For air, nitrogen, argon, oxygen, city gas, methane, propane

How to order

FCM - 9500 AI - H6 0 AN R 1 B T

- FCM: Model No.
- 9500: Ⓐ Flow rate range
- AI: Ⓑ Applicable fluid
- H6: Ⓒ Port size, body material
- 0: Ⓓ Input signal
- AN: Ⓔ Output specifications
- R: Ⓕ Display direction
- 1: Ⓖ Cable
- B: Ⓗ Bracket
- T: Ⓘ Traceability

Code		Description	AI	AR	O2	LN	C1	C3
Ⓐ Flow rate range								
Applicable fluid								
9500	Standard model	0 to 0.5 L/min	●	●	●	●	●	●
0001		0 to 1 L/min	●	●	●	●	●	●
0002		0 to 2 L/min	●	●	●	●	●	●
0005		0 to 5 L/min	●	●	●	●	●	●
0010		0 to 10 L/min	●	●	●	●	●	●
0020		0 to 20 L/min	●	●				
0050		0 to 50 L/min	●	●				
0100		0 to 100 L/min (resin body only)	●					
L9500	Low differential pressure model (stainless steel only)	0 to 0.5 L/min	●		●	●	●	●
L0001		0 to 1 L/min	●		●	●	●	●
L0002		0 to 2 L/min	●		●	●	●	●
L0005		0 to 5 L/min	●		●	●	●	●
L0010		0 to 10 L/min	●		●	●	●	●

Ⓑ Applicable fluid	
AI	Compressed air, nitrogen gas
AR	Argon
O2	Oxygen (oil-prohibited specifications)
LN	City gas (13A)
C1	Methane (CH_4)
C3	Propane (C_3H_8)

Ⓒ Port size, body material		AI	AR	O2	LN	C1	C3
Applicable fluid							
H6	Push-in (ø6), resin body (Flow rate range: excluding 0050, 0100)	●					
H8	Push-in (ø8), resin body	●					
8A	Rc1/4, stainless steel body	●	●	●	●	●	●
UF *1	9/16-18UNF, stainless steel body	●	●	●	●	●	●

Ⓓ Input signal	
0	Analog 0 to 10 VDC
1	Analog 0 to 5 VDC
2	Analog 4 to 20 mADC
P	Parallel 10 bit

Ⓔ Output specifications	
AN	1 to 5 V analog error (NPN)
AP	1 to 5 V analog error (PNP)
SN	Switch (NPN), error (NPN)
SP	Switch (PNP), error (PNP)

Ⓕ Display direction	
Blank	Forward direction
R	Reverse direction

Ⓖ Cable	
Blank	None
1	1 m
3	3 m

Ⓗ Bracket	
Blank	None
B	With bracket

Ⓘ Traceability	
Blank	None
T	Traceability certification with series variation diagram and company certification
K	With company certification

[Example of model No.]

FCM-0001AI-H81ANR1BK

Model name: Compact flow rate controller RAPIFLOW FCM

- Ⓐ Flow rate range : 0 to 1 L/min
- Ⓑ Applicable fluid : Compressed air, nitrogen
- Ⓒ Port size, body material : Push-in (ø8), resin body
- Ⓓ Input signal : Analog 0 to 5 VDC
- Ⓔ Output specifications : 1 to 5 V analog, error (NPN)
- Ⓕ Display direction : Reverse direction
- Ⓖ Cable : 1 m
- Ⓗ Bracket : With bracket
- Ⓘ Traceability : With company certification

⚠ Precautions for model No. selection

*1: Refer to dimensions on page 1502 for shape of 9/16-18UNF thread.

Discrete option model No.

FCM - AC1

Code	Description
AC1	Analog 9-conductor, 1 m cable
AC3	Analog 9-conductor, 3 m cable
PC1	Parallel 15-conductor, 1 m cable
PC3	Parallel 15-conductor, 3 m cable
LB1	Bracket

■ For hydrogen, helium

How to order

FCM - 0002 H2 - 8A 0 AN R 1 B T

Model No.

Ⓘ Traceability
Ⓗ Bracket

Code	Description		
Ⓐ Flow rate range			
Applicable fluid		H2	HE
0002	0 to 2 L/min	●	●
0005	0 to 5 L/min	●	●
0010	0 to 10 L/min	●	●
0020	0 to 20 L/min	●	●

Ⓑ Applicable fluid	
H2	Hydrogen
HE	Helium

Ⓒ Port size			
Applicable fluid		H2	HE
8A	Rc1/4	●	●
UF	9/16-18UNF	●	●
4S	1/4" double barbed fitting	●	●
4RM	1/4" JXR male fitting	●	●

Ⓓ Input signal	
0	Analog 0 to 10 VDC
1	Analog 0 to 5 VDC
2	Analog 4 to 20 mADC
P	Parallel 10 bit

Ⓔ Output specifications	
AN	1 to 5 V analog error (NPN)
AP	1 to 5 V analog error (PNP)
SN	Switch (NPN), error (NPN)
SP	Switch (PNP), error (PNP)

Ⓕ Display direction	
Blank	Forward direction
R	Reverse direction

Ⓖ Cable	
Blank	None
1	1 m
3	3 m

Ⓗ Bracket	
Blank	None
B	With bracket

Ⓘ Traceability	
Blank	None
T	Traceability certification with series variation diagram and company certification
K	With company certification

[Example of model No.]

FCM-0002H2-8A1ANR1BK

Ⓐ Flow rate range : 0 to 2 L/min
Ⓑ Applicable fluid : Hydrogen
Ⓒ Port size : Rc1/4
Ⓓ Input signal : Analog 0 to 5 VDC
Ⓔ Output specifications : 1 to 5 V analog, error (NPN)
Ⓕ Display direction : Reverse direction
Ⓖ Cable : 1 m
Ⓗ Bracket : With bracket
Ⓘ Traceability : With company certification

Discrete option model No.

FCM - AC1

Code	Description
AC1	Analog 9-conductor, 1 m cable
AC3	Analog 9-conductor, 3 m cable
PC1	Parallel 15-conductor, 1 m cable
PC3	Parallel 15-conductor, 3 m cable
LB1	Bracket

Dimensions

Body material: Resin, port size: ø6, ø8

● FCM-□-H8/H6□

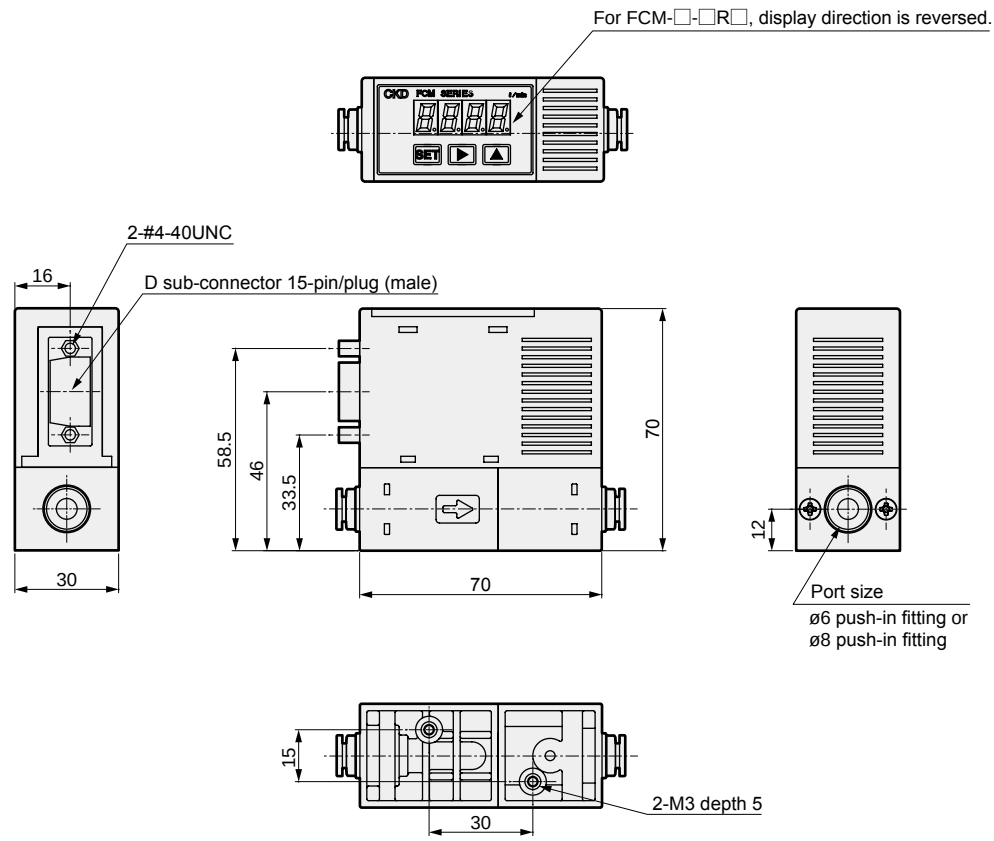

Body material: Stainless steel, Port size: Rc1/4, 9/16-18UNF

● FCM-□-8A/UF

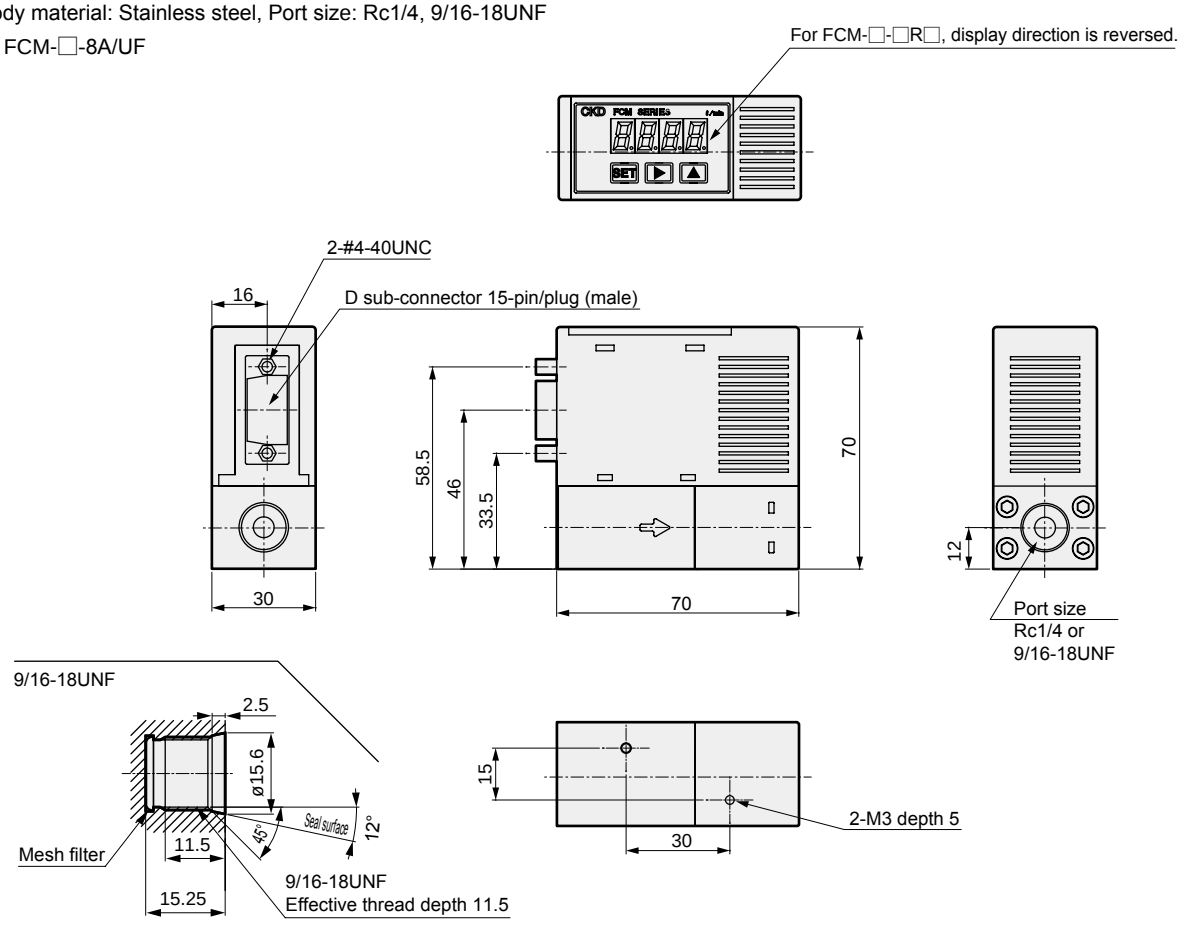

Dimensions

Port size: 1/4" double barbed fitting

● FCM-□-4S

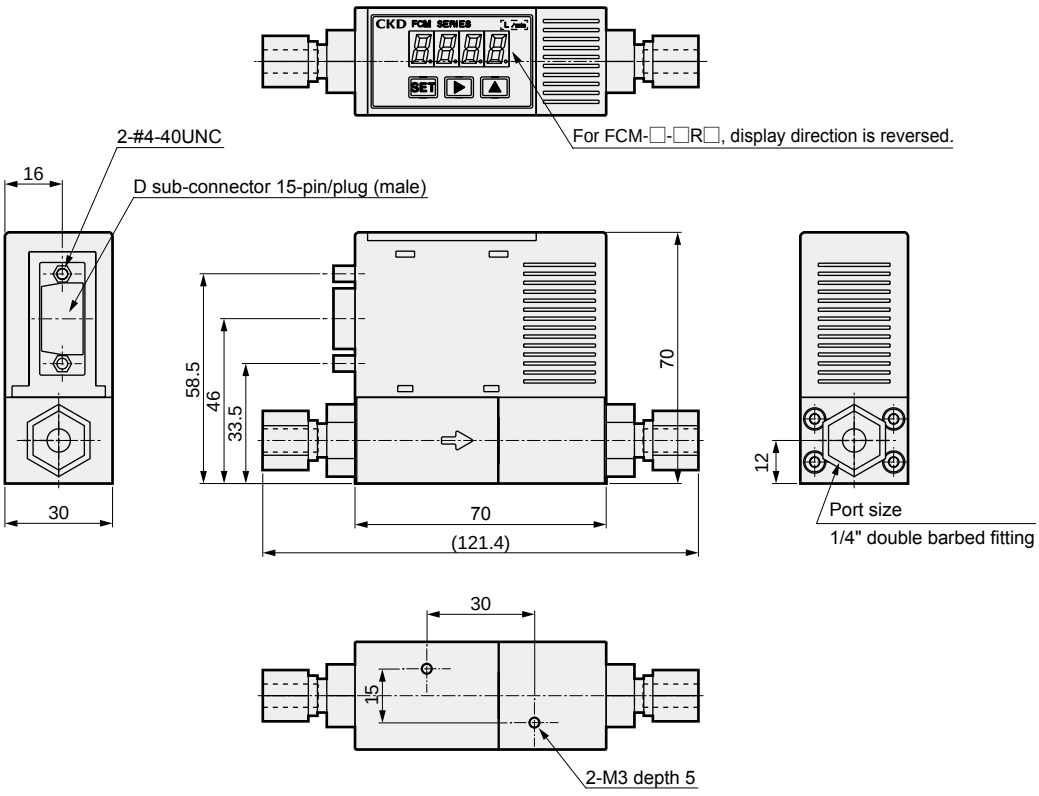

Port size: 1/4" JXR male fitting

● FCM-□-4RM

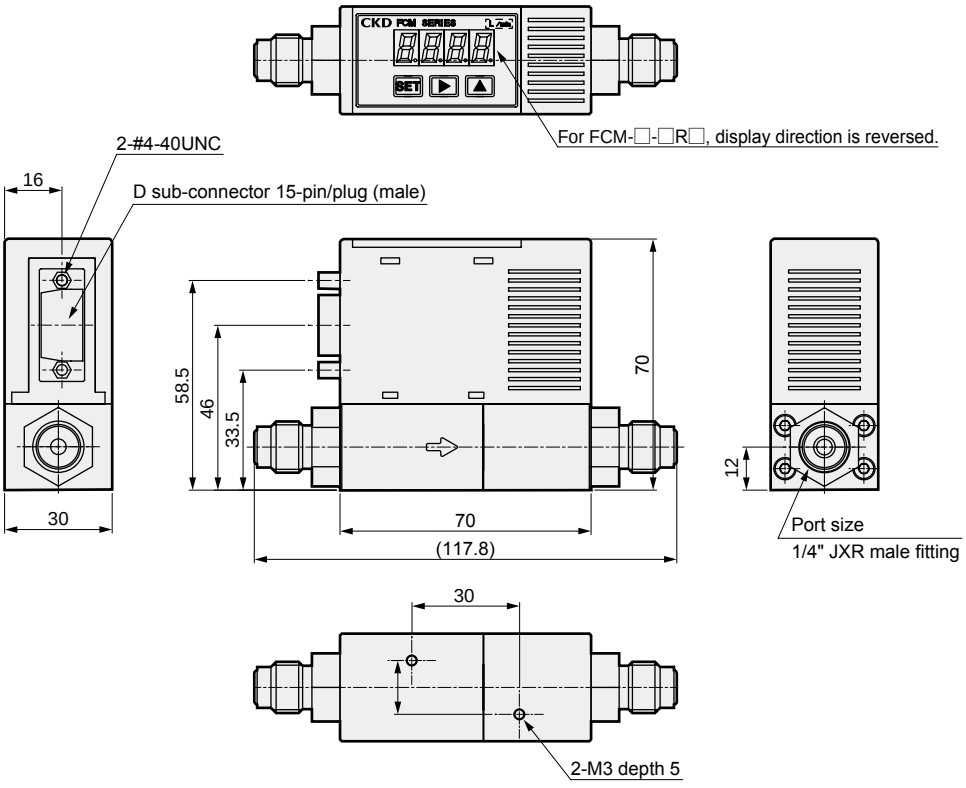

Dedicated bracket (floor mounted)

Discrete model No.: FCM-LB1

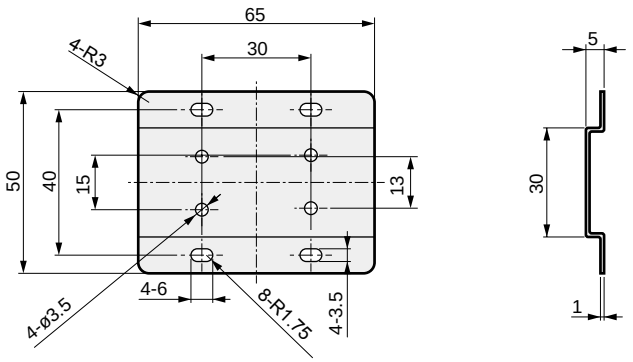

Material: Steel
Weight: 28g

Cable optional dimensions

● 9-conductor cable for analog input

Discrete option model No.: FCM-AC1, AC3

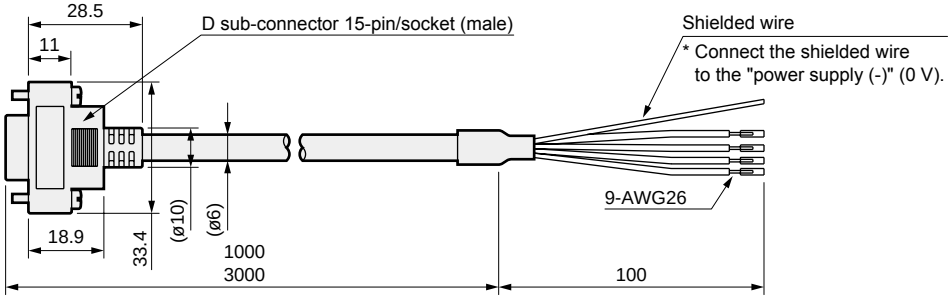

Cable	Weight g
FCM-AC1	68
FCM-AC3	166

D sub-socket pin No.	1	2	3	4	5	6	7	8	9	10	11			12	13		14	15
Insulator color	Brown	Orange	Yellow	-	Red	-	-	-	-	Gray	White			-	Green		Blue	Black
Name	Preset input signal		Integration reset signal	Vacant	Power supply +	Vacant	Vacant	Vacant	Vacant	Common	Input signal			Vacant	Analog output	Switch output	Error output	Power supply - (0V)
Input	Bit 1	Bit 2			+24 VDC						0 to 10 VDC	0 to 5 VDC	4 to 20 mADC	Vacant	1 to 5 VDC	NPN or PNP output	NPN or PNP output	

Note: The No. 10 pin common is the common for the preset input and integration reset signal (pin No. 1 to 3).

● 15-conductor cable for parallel input

Discrete option model No.: FCM-PC1, PC3

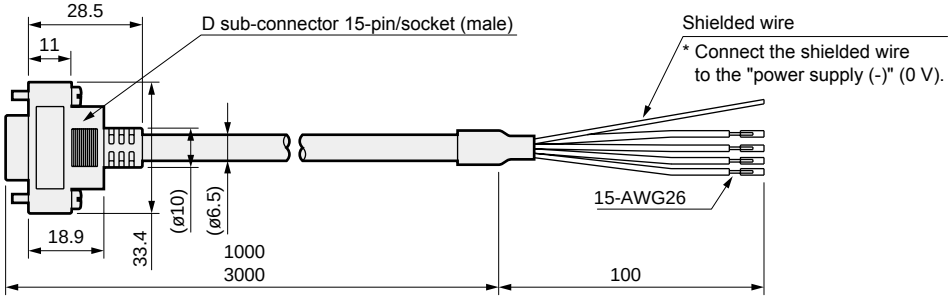

Cable	Weight g
FCM-PC1	82
FCM-PC3	205

D sub-socket pin No.	1	2	3	4	5	6	7	8	9	10	11	12	13		14	15
Insulator color	Brown	Orange	Yellow	Purple	Red	Light blue	Pink	White/ black line	Red/ black line	Gray	White	Green/ black line	Green		Blue	Black
Name	Parallel input signal				Power supply +	Parallel input signal				Common	Parallel input signal		Analog output	Switch output	Error output	Power supply - (0V)
Input	Bit 1	Bit 2	Bit 3	Bit 4	+24 VDC	Bit 5	Bit 6	Bit 7	Bit 8		Bit 9	Bit 10	1 to 5 VDC	NPN or PNP output	NPN or PNP output	

Note: The No. 10 pin common is the common for the parallel input signal (pin No. 1 to 4, 6 to 9, 11, 12).

Wiring method

Example of internal circuit and load connection Analog input

⚠ CAUTION Take care to prevent incorrect wiring.

FCM-□-□0/1/2 AN□
(Analog input, analog output + error output NPN output)

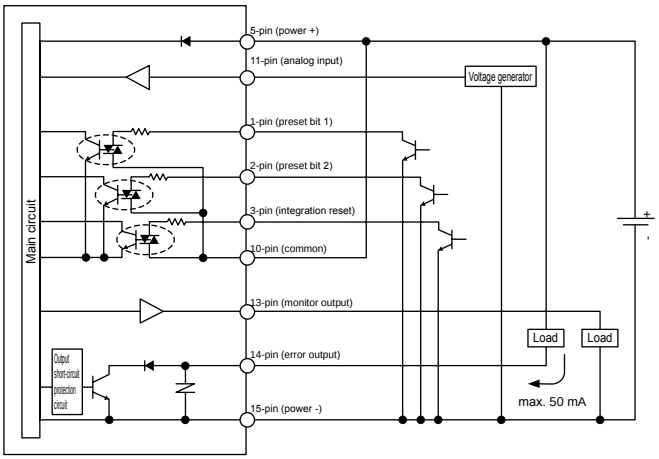

*Current consumption for pins 1 to 3 is approx. 6 mA.

FCM-□-□0/1/2 AP□
(Analog input, analog output + error output PNP output)

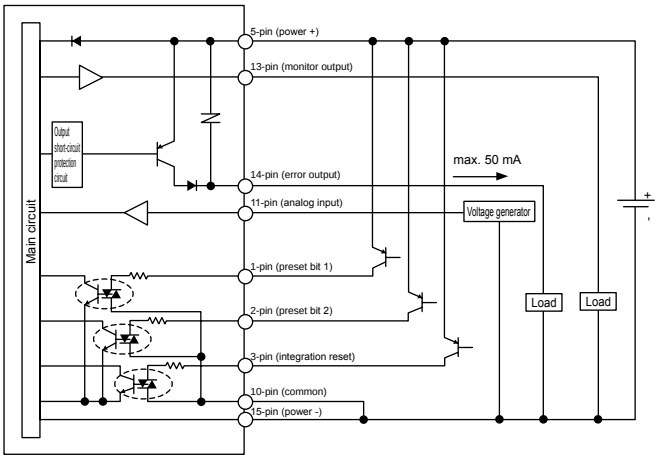

*Current consumption for pins 1 to 3 is approx. 6 mA.

FCM-□-□0/1/2 SN□
(Analog input, switch output + error output NPN output)

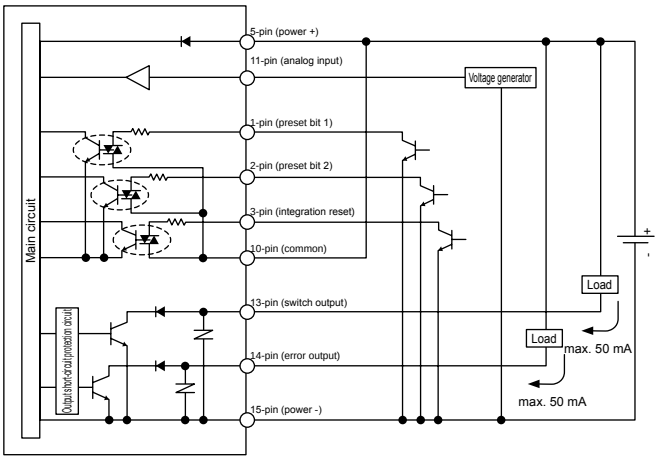

*Current consumption for pins 1 to 3 is approx. 6 mA.

FCM-□-□0/1/2 SP□
(Analog input, switch output + error output PNP output)

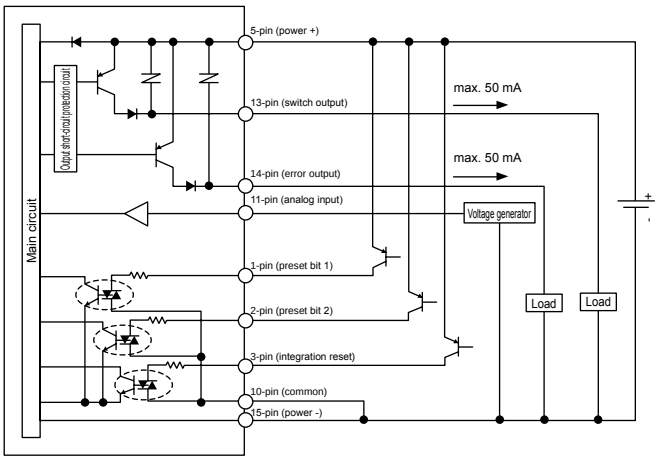

*Current consumption for pins 1 to 3 is approx. 6 mA.

■ Connector pin array (product body side)
[Analog input]

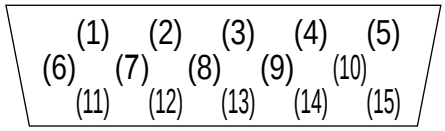

The analog input
(4), (6), (7), (8), (9) and (12) do not have pins.

Example of internal circuit and load connection Parallel input

⚠ CAUTION Take care to prevent incorrect wiring.

FCM-□-□ PAN□
(Parallel input, analog output + error output NPN output)

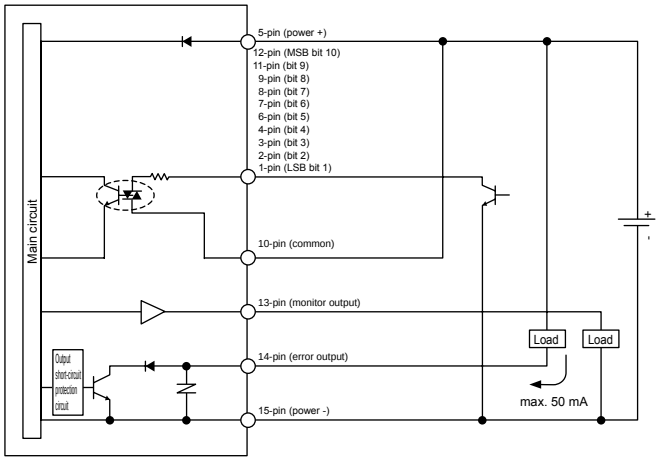

*Current consumption for pins 1 to 4, 6 to 9, 11 and 12 is approx. 6 mA.

FCM-□-□ PAP□
(Parallel input, analog output + error output PNP output)

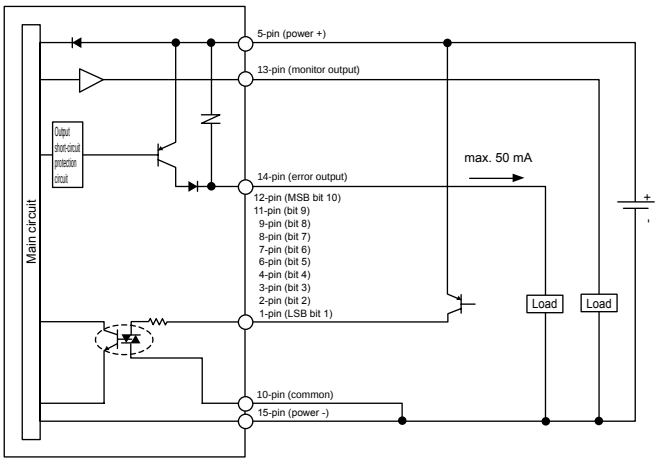

*Current consumption for pins 1 to 4, 6 to 9, 11 and 12 is approx. 6 mA.

FCM-□-□ PSN□
(Parallel input, switch output + error output NPN output)

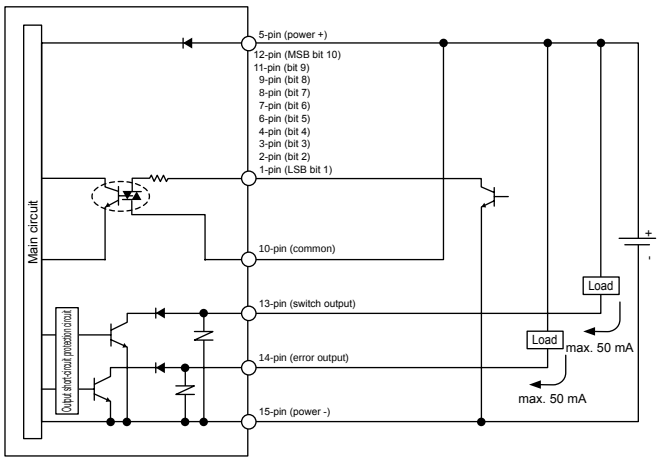

*Current consumption for pins 1 to 4, 6 to 9, 11 and 12 is approx. 6 mA.

FCM-□-□ PSP□
(Parallel input, switch output + error output PNP output)

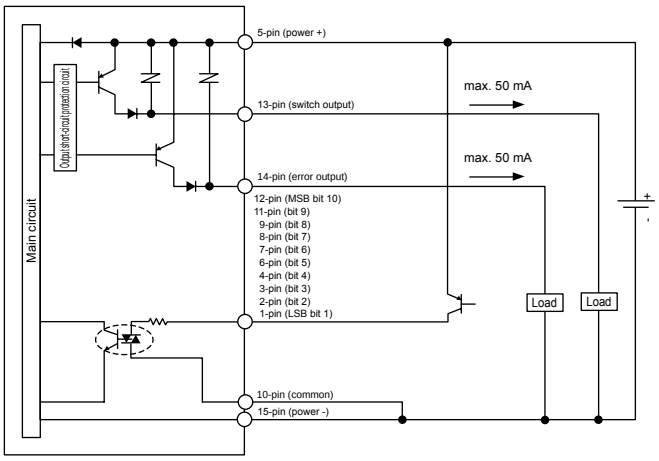

*Current consumption for pins 1 to 4, 6 to 9, 11 and 12 is approx. 6 mA.

■ Connector pin array (product body side)
[Parallel input]

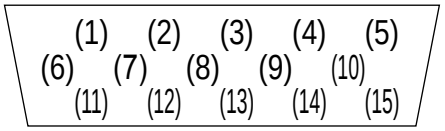

Compact flow rate controller Functions of FCM Series

Functions

Function	Description	Function compatible model				Operating method
		Analog input		Parallel input		
		Analog output	Switch output	Analog output	Switch output	
Direct memory function	Target value can be entered by key. Control flow rate can be controlled freely by operation key on the product even if there is no external input signal.	○	○	○	○	1509, 1510 1520
Preset input function	By specifying 4 arbitrary flow rates, the flow rate can be controlled with an external 2-bit input signal (signal from PLC, etc.).	○	○			1511 1520
Analog input function	Flow rate can be controlled with an analog input signal.	○	○			1513 1520
Parallel input function	Flow rate can be controlled with a parallel 10-bit (signal from PLC, etc.). Expensive input-output devices such as D/A converters are not required.			○	○	1514 1519
Integrating functions	Integrates the flow rate. As well as integrating flow display, it has the following functions. · Closes the solenoid valve when the value reaches the set integrating flow · Integrated pulse function (switch output only) *1 · Turns the switch ON when the value reaches the set integrating flow (switch output only) *1 How to reset the integrated value · Analog input: External input, button operation · Parallel input: Button operation only	○ (*1)	○	○ (*1)	○	1515 1516 1519 1521 1522
Switch output functions	The switch functions below can be selected · (1) Tolerance mode: Turns the switch ON when the value is within tolerance against the control target value (arbitrary setting) · (2) Designated range mode: Turns the switch ON when the value is outside the designated flow rate range · (3) Integrated pulse: Outputs the integrated pulse when performing integration · (4) ON at set integration or higher: Turns the switch ON when the value reaches the set integrating flow [Mode 1: Tolerance mode] [Mode 2: Designated range mode] 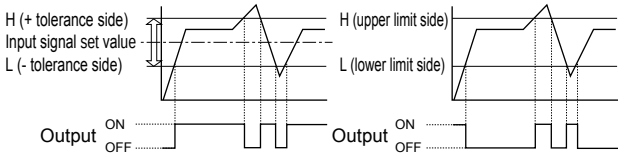 [Mode 3: Integrated pulse] [Mode 4: ON at set integration or higher] 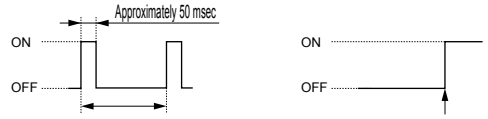 Refer to pages 1515 and 1516 for pulse output rate. Set integrated value		○		○	1516 1517 1518 1521
Input signal zero/span adjustment function	Zero point or span point of input signal can be changed 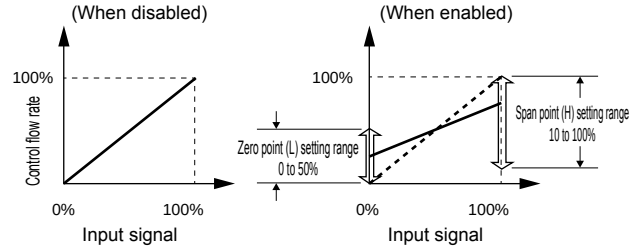	○	○			1521
Zero point adjustment	Adjusts the zero point of flow rate output	○	○	○	○	1522
Auto-power OFF	Turns the flow rate display OFF if not operated for approx. 1 minute (control does not stop with auto-power OFF function). Turns off unneeded displays to enable energy-saving operation.	○	○	○	○	1521
Error display function	Capable of displaying error state. As well as error display, it has the following functions. · Turns ON error output when an error occurs (applicable only for E01, E02, E05) · Stops control automatically when an error occurs	○	○	○	○	1508 1522
Error auto shut-off	Stops control when an error occurs, fully opens or closes valves, and turns error output ON	○	○	○	○	1522
Key lock	Disables setting change to avoid incorrect operation	○	○	○	○	1519
Reset setting	Returns the settings to default (Input signal selection, switch output, input signal zero/span adjustment, auto-power OFF, zero adjustment only)	○	○	○	○	1519

Names and functions of display/operation section

Output display (Red)

- "F" is displayed when confirming the function setting.
- "-" is turned on when switch output is ON. (switch output only)
  * Blinks when overcurrent is detected.
  * Does not blink at integrated pulse output.
- "E" lights up when error output is ON.
  * Blinks when overcurrent is detected.

* When function settings have upper/lower limits or when high-order digit or low-order digit of integrating flow display is indicated

H or L is displayed.

3-digit number LED display (green)

- Displays instantaneous flow rate display and function setting details during RUN mode (instantaneous flow rate display).
  * The setting mode No. and setting details are displayed when displaying details of function settings.
- When setting each data, the values, etc., are displayed.
- Error code No. is displayed at the time of error display.

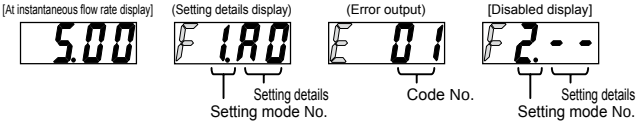

Flow rate 110% or more: Hi

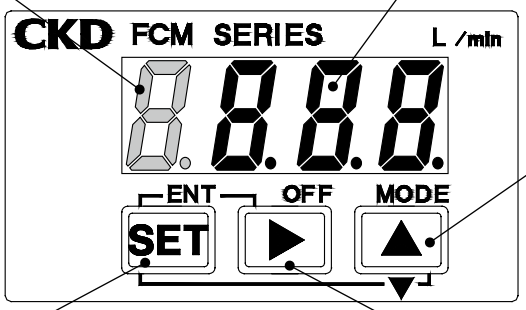

UP key (MODE key)

- Used to count up values, etc.
- Used to change the setting mode.
- Used to change the settings item.

SET Key

- Used to confirm the setting mode.
- Used to confirm the setting item.
- Used to change to the integration display.

Shift key (OFF key)

- It is used to select the digits to the values, etc.
- Used to reset from forced OFF when performing forced OFF (control stop).

SET + Key (ENT key)

- Used to confirm the value.
- Used to release the key lock.
- Used to reset integration.

SET + Key (DOWN key)

- Used to count down values, etc.
- Used to set the key lock.

+ Key

- Used for initialization.

Error code table

Error display	Cause	Countermeasures	Errors subject to error auto shut-off (*1)
E.01	The power voltage is not within the rating. (Detected at 19.5 VDC or less, detection accuracy ±10% F.S.)	● Check the product's specifications, set the power voltage within the rated range, then turn the power ON again.	○
E.02	The input signal exceeded the rating range. (Detected at input 110% F.S. and over, detection accuracy ±1% F.S.)	● Check the product's input signal, set the input signal within the rated range, then turn the power ON again.	○
E.03	An error occurred during EEPROM reading or writing.	● Contact your CKD branch or dealer.	
E.04	An error occurred during memory reading or writing.	● Contact your CKD branch or dealer.	
E.05	The flow rate did not reach the setting value for approx. 5 secs. or more consecutively. (When the difference between the setting value and control value is ±20% F.S. and over, the detection accuracy is ±6% F.S.)	● After checking primary pressure, provide pressure within the rating operation differential pressure range, and then turn ON the power supply again. Or it can be reset by releasing after forced OFF (control stop) once. ● After checking for leakage from pipes, fittings, or other devices, correctly connect them, and then turn ON the power supply again. ● Contact your CKD branch or dealer.	○
E.06	Sensor output failure has occurred.	● Stop the supply of fluid to the device, set the flow rate setting to zero, and then turn ON the device power supply again. If this error is not resolved, contact your CKD branch or dealer.	○ (*2)
E.888	The switch output's overcurrent protection circuit has functioned.	● After checking whether load current exceeds the rating, correctly connect them, and then turn ON the power supply again.	

Generally, the error resets automatically; however, if it does not do so, turn OFF the power supply, check and correct the cause of the error, and then turn ON the power supply again.

*1: At shipment, the error auto shut-off was set to OFF (when an error occurs: valve fully closed). Refer to page 1522 for details.

*2: OFF regardless of the setting of error auto shut-off (when an error occurs: valve fully closed).

Controlling the flow rate

(1) When controlling the flow rate using direct memory function

Target value can be entered by key. Control flow rate can be controlled freely by operation key on the product even if there is no external input signal.
Direct memory function has two operation modes.

· Direct memory (1): Settings are applied by changing the value. (Even if the value is not confirmed, the flow rate can be varied by changing the value. This function is convenient for fine adjustment of the flow rate. Confirm the setting value after determining the flow rate.)
· Direct memory (2): Applied after the value confirmed. (When not confirming the value, the flow rate is not changed.)

[Direct memory (1) operation method]

(1) Power ON Instantaneous flow rate is displayed.

(2) By pressing the ▲ key, the screen enters [F1: Input signal confirmation] screen and the present input signal setting state is displayed. The present input signal and input value are alternately displayed. (After 3 secs. have elapsed without pressing the button, the display returns to the instantaneous flow rate display.)

(3) By holding down the SET key for approx. 2 secs., "F1.dr" starts to blink.

(4) By holding down the SET key for approx. 2 secs., the screen enters [Direct memory (1) setting] screen.

(5) Change the value to change the flow rate. Even if the value is not confirmed, the flow rate can be varied by changing the value.

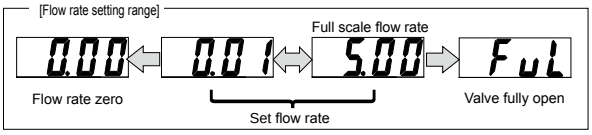

(6) By holding down the SET ▶ keys simultaneously for approx. 2 secs., the value is confirmed. Returns to [F1: Input signal confirmation] screen.

(7) Returns to the instantaneous flow rate display automatically after approx. 3 secs.

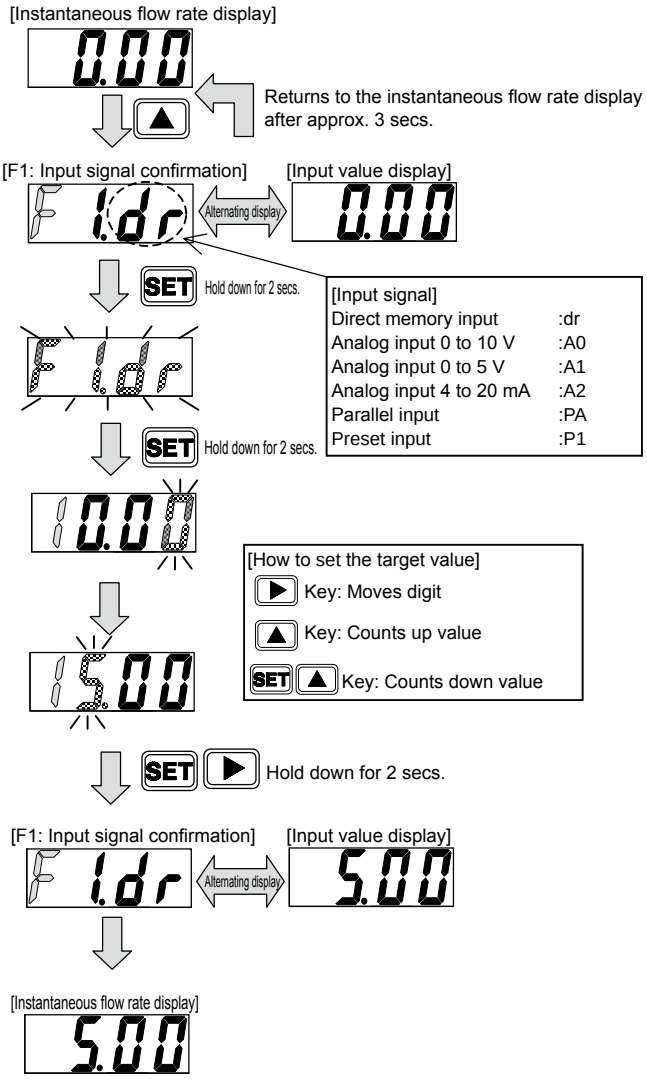

Forced OFF (flow rate zero) method

By holding down the ▶ key for approx. 2 secs. in the flow rate control state (instantaneous flow rate display), the control can be forced to stop (flow rate zero).
By holding down the ▶ key for approx. 2 secs. in the flow rate control stop state (forced OFF), the control can be returned to the flow rate control state.

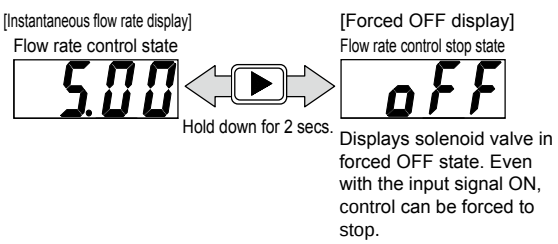

Controlling the flow rate

[Direct memory (2) operation method]

(1) Power ON Instantaneous flow rate is displayed.

(2) By pressing the ▲ key once, the screen enters [F1: Input signal confirmation] screen and the present input signal setting state is displayed. The present input signal and input value are alternately displayed. (After 3 secs. have elapsed without pressing the button, the display returns to the instantaneous flow rate display.)

(3) By holding down the SET key for approx. 2 secs., "F1.dr" starts to blink.

(4) By holding down the SET ▶ key for approx. 2 secs., the screen enters [Direct memory (2) setting] screen.

(5) Change the value.
(When not confirming the value, the flow rate is not changed.)

(6) By holding down the SET ▶ keys simultaneously for approx. 2 secs., the value is confirmed. Returns to [F1: Input signal confirmation] screen.

(7) Returns to the instantaneous flow rate display automatically after approx. 3 secs.

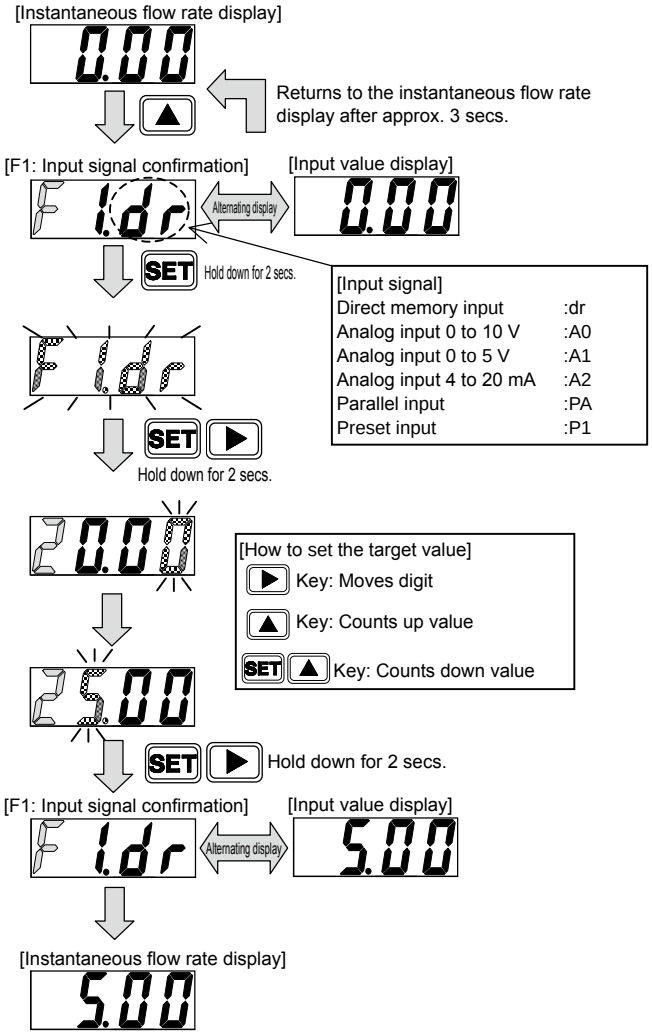

Forced OFF (flow rate zero) method

By holding down the ▶ key for approx. 2 secs. in the flow rate control state (instantaneous flow rate display), the control can be forced to stop (flow rate zero).
By holding down the ▶ key for approx. 2 secs. in the flow rate control stop state (forced OFF), the control can be returned to the flow rate control state.

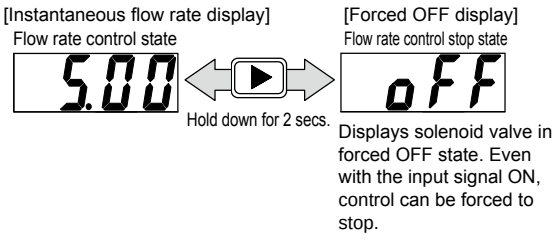

CAUTION:

- The control is not stopped when direct memory setting is performed. Taking safety into account, if required, conduct it after stopping the control (forced OFF).
- The flow rate control/forced OFF state (setting value) is retained even after the power supply is turned OFF.

Controlling the flow rate

(2) When controlling the flow rate using preset input (analog input only)

By specifying 4 arbitrary flow rates, the flow rate can be controlled with an external input signal (2-bit).

Example) To control 0, 1, 2, 5 L/min using preset input, select the preset input in the input setting mode

P1: 0 L/min P2: 1 L/min

P3: 2 L/min P4: 5 L/min

for each setting. When signals are input from a PLC, etc., as indicated in the table at right, the flow rate is controlled to each preset flow rate.

D sub-socket pin No.	2	1	Preset memory number
Cable option insulator color	Orange	Brown	
Input	Bit 2	Bit 1	
Input signal	OFF	OFF	P1
	OFF	ON	P2
	ON	OFF	P3
	ON	ON	P4

[Control method using preset input signal]

(1) Power ON Instantaneous flow rate is displayed.

(2) By pressing the ▲ key once, the screen enters [F1: Input signal confirmation] screen and the present input signal setting state is displayed. The present input signal and input value are alternately displayed. (After 3 secs. have elapsed without pressing the button, the display returns to the instantaneous flow rate display.)

(3) By holding down the SET key for approx. 2 secs., "F1.dr" starts to blink.

(4) By pressing the ▲ key 2 times, "F1.P1" starts to blink.

(5) By holding down the SET key for approx. 2 secs., the screen enters P1 setting confirmation screen.

(6) Hold down the SET key for approx. 2 secs. to move to the target input screen, and then enter the target value.

(7) By holding down the SET ▶ key for approx. 2 secs., the target value is stored in memory, and the screen enters P2 setting confirmation screen. Determine target values through P4 similarly.

(8) Returns to the instantaneous flow rate display automatically after approx. 3 secs. Flow rate can be controlled using the preset input.

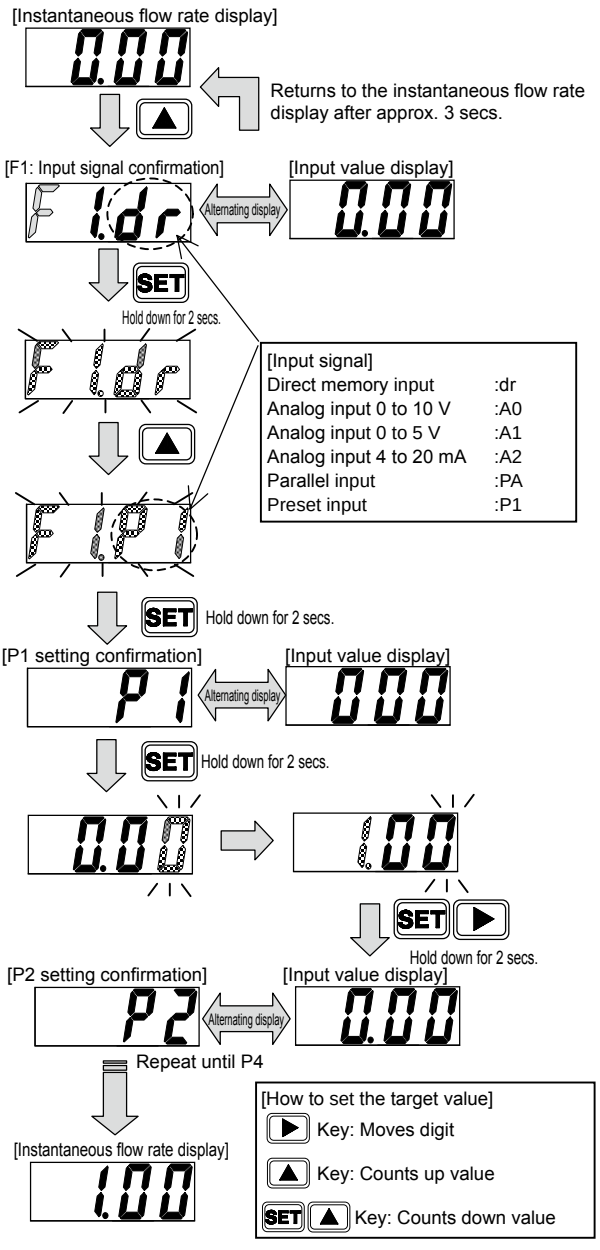

* If switching bit 1 and bit 2 at the same time, switch within 15 ms.
As an example, note that preset memory may be wrongly set if the time difference is large, such as when switching the preset memory from P2 → P3.

Controlling the flow rate

(3) Setting change using short cut keys (only when using direct memory and preset input functions)

When using the direct memory function and the preset input function to control the flow rate, the screen can enter the setting value change screen with a single key operation.

Note: Enters the screen for changing the set value of the input signal when the shortcut key is pressed.
(Example: When controlling the flow rate with the preset input P2, the screen enters the P2 setting value change screen.)
Not applicable when controlling the flow rate using analog input or parallel input.

[Setting value change method using shortcut]

(1) Power ON Instantaneous flow rate is displayed.
(Applicable only when controlling with direct memory function or preset input function)

(2) By holding down the ▲ key for 3 secs., the screen enters the screen for changing the set value of the input signal when the ▲ key is pressed.

(3) Change the value to change the flow rate. Even if the value is not confirmed, the flow rate can be varied by changing the value.

(4) By holding down the SET ▶ keys simultaneously for approx. 2 secs., the value is confirmed. Returns to [F1: Input signal confirmation] screen.

(5) Returns to the instantaneous flow rate display automatically after approx. 3 secs.

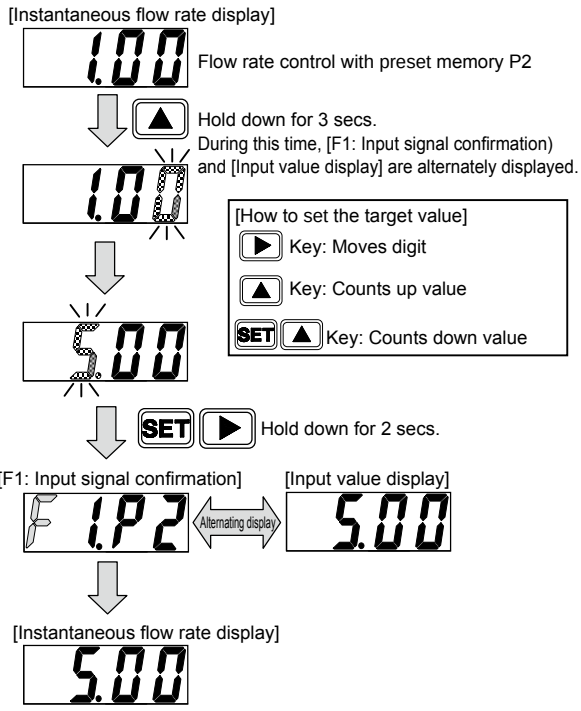

Note: When changing settings using shortcut keys, do not switch the preset external input.
The setting value may be stored at an incorrect preset number. Because the data is not stored in memory after turning off the power supply without confirming the value, make sure to confirm the value before turning OFF the power supply.

Controlling the flow rate

(4) When controlling the flow rate using analog input (analog input only)

Flow rate can be controlled with an analog input signal.

[Control method using analog input signal]

(1) Power ON Instantaneous flow rate is displayed.

(2) By pressing the ▲ key once, the screen enters [F1: Input signal confirmation] screen and the present input signal setting state is displayed. The present input signal and input value are alternately displayed. (After 3 secs. have elapsed without pressing the button, the display returns to the instantaneous flow rate display.)

(3) By holding down the SET key for approx. 2 secs., "F1.dr" starts to blink.

(4) By pressing the ▲ key once, "F1.A 0" starts to blink.
(Depending on the model No., the number in the □ changes.)

(5) By holding down the SET key for approx. 2 secs., the setting is confirmed.
Returns to [F1: Input signal confirmation] screen.

(6) Returns to the instantaneous flow rate display automatically after approx. 3 secs.
Flow rate can be controlled using analog input.

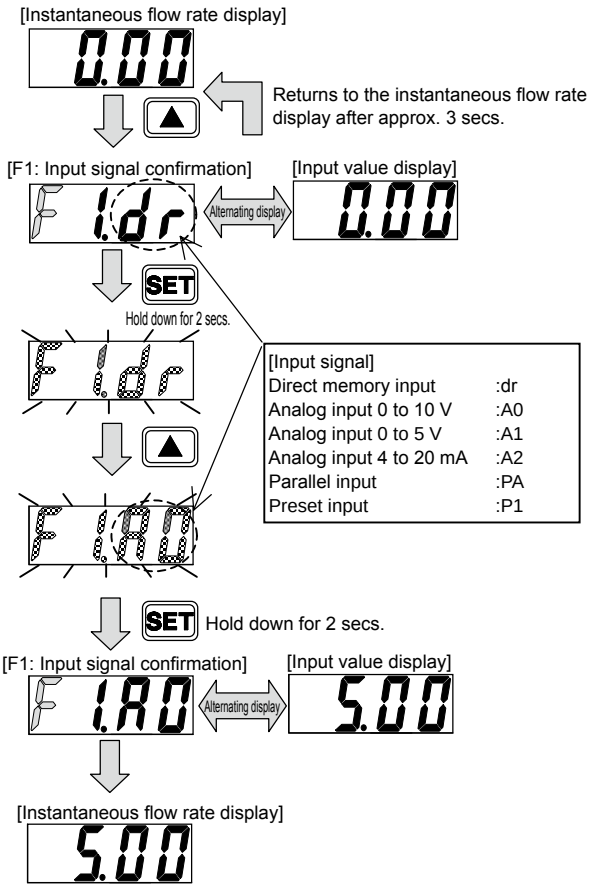

CAUTION: Fully open (FUL) cannot be set with the analog input.

Controlling the flow rate

(5) When controlling the flow rate using parallel input (parallel input only)

Flow rate can be controlled with a parallel 10-bit (signal from PLC, etc.). Expensive input-output devices such as D/A converters are not required.
The parallel input signal has 10 points, and when converted into a decimal, it is 0-1023. The resolution is approx. 0.1%.

Input signal = Set flow rate / Full scale flow rate x 1023

Example) When setting the flow rate to 300 mL/min with full scale flow rate of 500 mL/min

300 (mL/min) / 500 (mL/min)×1023=613.8 → 614

When 614 (decimal) is converted into binary, the result is 1001100110. 1 sets the input signal to ON, and 0 sets the input signal to OFF.
(Refer to table below)

D sub-socket pin No.	12	11	9	8	7	6	4	3	2	1
Cable option insulator color	Green (black line)	White	Red (black line)	White (black line)	Pink	Light blue	Purple	Yellow	Orange	Brown
Input	Bit 10 MSB	Bit 9	Bit 8	Bit 7	Bit 6	Bit 5	Bit 4	Bit 3	Bit 2	Bit 1 LSB
Binary [for 614 (decimal)]	1	0	0	1	1	0	0	1	1	0
Input signal	ON	OFF	OFF	ON	ON	OFF	OFF	ON	ON	OFF

[Control method using parallel input signal]

(1) Power ON Instantaneous flow rate is displayed.

(2) By pressing the ▲ key once, the screen enters [F1: Input signal confirmation] screen and the present input signal setting state is displayed. The present input signal and input value are alternately displayed. (After 3 secs. have elapsed without pressing the button, the display returns to the instantaneous flow rate display.)

(3) By holding down the SET key for approx. 2 secs., "F1.dr" starts to blink.

(4) By pressing the ▲ key 1 time, "F1.PA" starts to blink.

(5) By holding down the SET key for approx. 2 secs., the setting is confirmed.
Returns to [F1: Input signal confirmation] screen.

(6) Returns to the instantaneous flow rate display automatically after approx. 3 secs.
Flow rate can be controlled using parallel input.

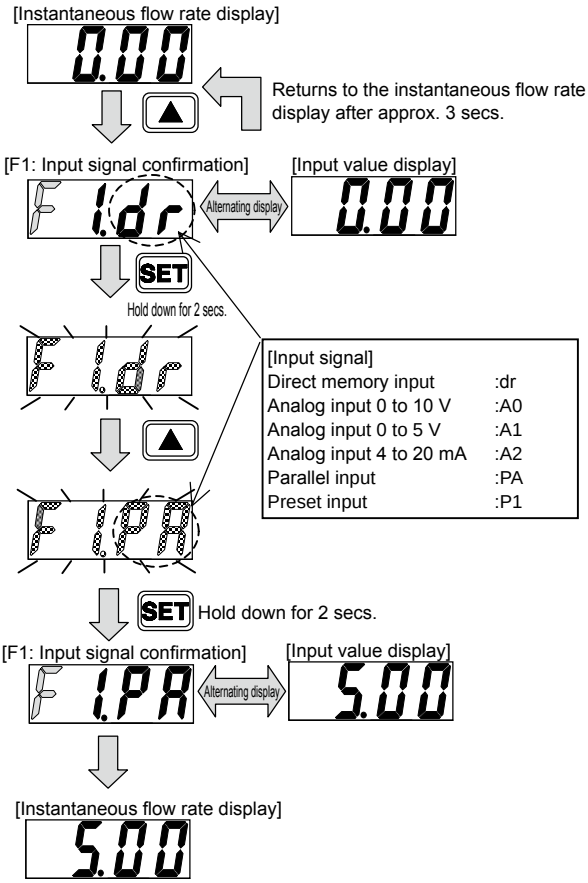

CAUTION: Fully open (FUL) cannot be set with the parallel input.

[Reference]

If low resolution is acceptable, the number of inputs can be reduced.

Example) If resolution of approx. 2% is acceptable, operation can be performed with input of 6 points (0-63 when converted to decimal). In this case, by shorting the bits 5 to 1 in the table above together to 1 bit (LSB) and turning ON/OFF, the control can be performed with input of 6 points.

Integrating the flow rate

(1) How to display integrating flow

Displays flow rate integration. The display range is as in the table below. The integrating flow is a calculated (reference) value.

Model No. FCM-		9500 L9500	0001 L0001	0002 L0002	0005 L0005	0010 L0010	0020	0050	0100
Flow rate display	Display range	0 to 500 mL/min	0.00 to 1.00 L/min	0.00 to 2.00 L/min	0.00 to 5.00 L/min	0.0 to 10.0 L/min	0.0 to 20.0 L/min	0.0 to 50.0 L/min	0 to 100 L/min
Integrating functions	Display range	999999 mL	9999.99 L	9999.99 L	9999.99 L	99999.9 L	99999.9 L	99999.9 L	999999 L
	Display resolution	1 mL	0.01 L	0.01 L	0.01 L	0.1 L	0.1 L	0.1 L	1 L
	Pulse output rate	5 mL	0.01 L	0.02 L	0.05 L	0.1 L	0.2 L	0.5 L	1 L

[How to display integration]

(1) Instantaneous flow rate display
Integration starts from the time when the power supply is turned ON. (The integrated value is reset when the power supply is turned OFF.)

(2) By holding down the SET key for approx. 2 secs., the screen enters the integration display screen. To return to the instantaneous flow rate display, hold down SET key for approx. 2 secs. Pressing the ▶ key changes the display digit.

(3) By holding down the SET ▶ key for approx. 2 secs., the integrated value is reset. For the analog input, integrated value reset is possible from the external input (No. 3 pin). The integrated value is reset when the power supply is turned OFF.

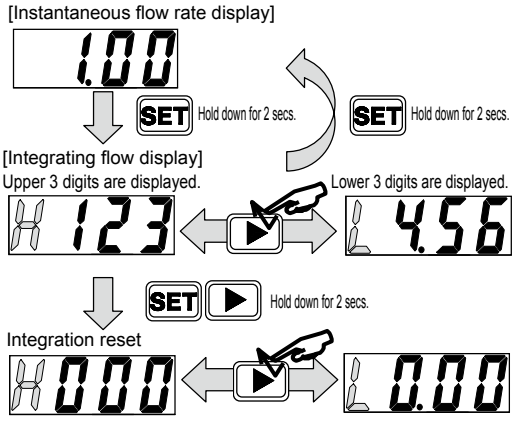

(2) When closing the solenoid valve when the value reaches the set integrating flow

When the value reaches the set integrating flow, the solenoid valve is closed.
Ideal for filling processes with a constant flow rate, etc.

[Operating method]

(1) Instantaneous flow rate display

(2) Press the ▲ key 5 times
to enter [F5: Integration auto shut-off setting screen]. If the integration auto shut-off setting is enabled, "F5.on" and the present setting value are alternately displayed. (After 3 secs. have elapsed without pressing the button, the display returns to the instantaneous flow rate display.)

(3) By holding down the SET key for approx. 2 secs., "F5.--" starts to blink. When not using the integration auto shut-off, by holding down SET key for approx. 2 secs., the display returns to [F5 screen], and after approx. 3 secs., it returns to the instantaneous flow rate display.

(4) When using the integration auto shut-off, press ▲ key to start "F5.on" blinking, and hold down SET key for approx. 2 secs.
After setting the higher digit, hold down SET ▶ key for approx. 2 secs.
After setting the lower digit, hold down SET ▶ key for approx. 2 secs.
The display returns to [F5 screen], and after approx. 3 secs., it returns to the instantaneous flow rate display.

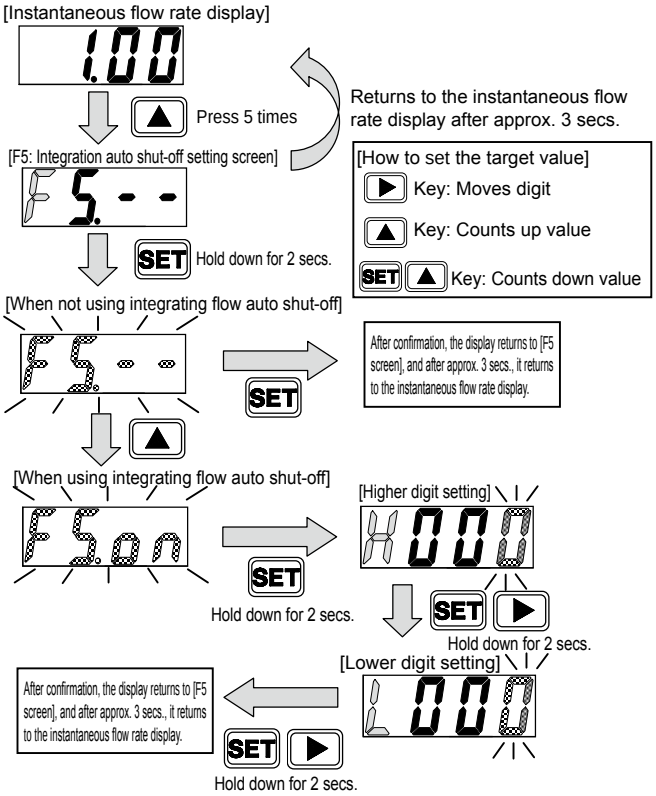

* In this mode alone, the integrated value is reset when the input signal goes to zero. (enabled only after auto shut-off)
* The solenoid valve is cut off automatically and switch operation is performed when the value matches the integrating flow value.
* When the display turns "OFF" by auto shut-off, the switch output light is not turned ON. By resetting the integrated value (with button operation or external input), the display returns to the flow rate display.
* Even if the auto shut-off function is disabled at the time of auto shut-off, operation cannot be performed unless the integrated value is reset.
* The integrated value is reset at the point when the auto shut-off is turned "ON" and the value is set.

Integrating the flow rate

(3) When an integrated pulse is outputted (switch output only)

The integrated pulse is output. Refer to the table on page 1515 for pulse output rate.
Refer to the wire connection method (page 1504) and example of the internal circuit and load connection (pages 1505, 1506) for the switch output wire connection method.
[Operating method]

(1) Instantaneous flow rate display

(2) Press the ▲ key 4 times to enter [F4: Switch output setting screen]. If the switch output setting is enabled, "F4.□" and the present setting value are alternately displayed.
(After 3 secs. have elapsed without pressing the button, the display returns to the instantaneous flow rate display.)

(3) Hold down the SET key for 2 secs. to enter the switch output setting mode.

(4) By pressing the ▲ key 3 times, "F4.3" starts to blink. By holding down the SET key for approx. 2 secs., the integrated pulse output is confirmed. The display returns to [F4 screen], and after approx. 3 secs., it returns to the instantaneous flow rate display.

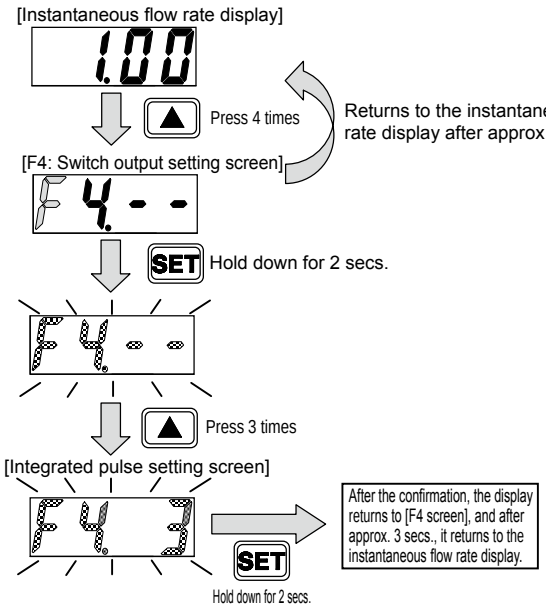

(4) When switch is ON when the value reaches the set integrating flow (switch output only)

The switch output is turned ON when the value reaches the set integrating flow.
Refer to the wire connection method (page 1504) and example of the internal circuit and load connection (pages 1505, 1506) for the switch output wire connection method.
[Operating method]

(1) Instantaneous flow rate display

(2) Press the ▲ key 4 times to enter [F4: Switch output setting screen]. If the switch output setting is enabled, "F4.□" and the present setting value are alternately displayed.
(After 3 secs. have elapsed without pressing the button, the display returns to the instantaneous flow rate display.)

(3) Hold down the SET key for 2 secs. to enter the switch output setting mode.

(4) Press the ▲ key once to start "F4.4" blinking, and hold down SET key for approx. 2 secs. to enter the target value setting screen.
After setting the higher 3 digits of the target value, hold down SET ▶ key for approx. 2 secs.
After setting the lower 3 digits of the target value, hold down SET ▶ key for approx. 2 secs. The integrated value is reset immediately after confirmation.

(5) The display returns to [F4 screen], and after approx. 3 secs., it returns to the instantaneous flow rate display.

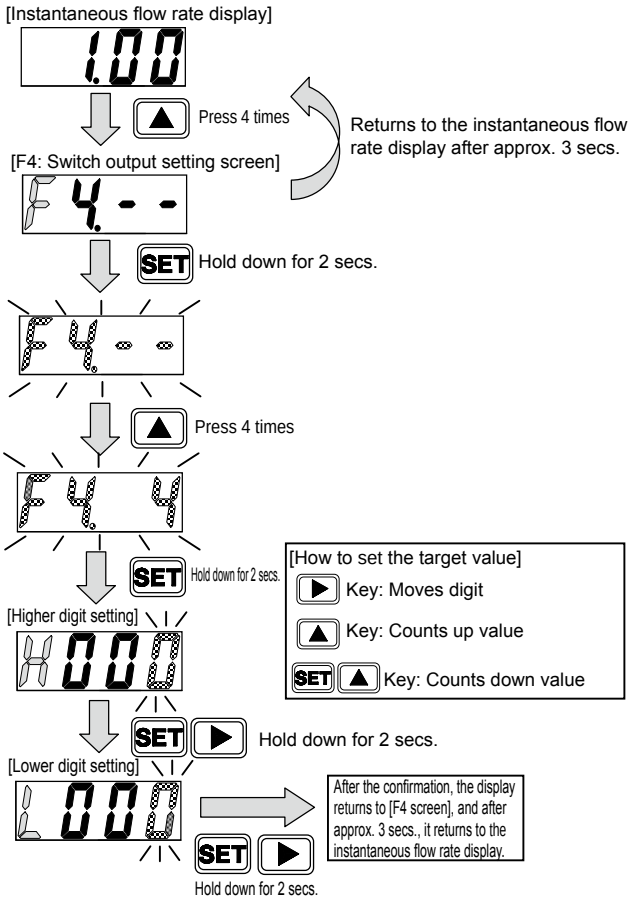

Using the switch output function (switch output only)

(1) When using the tolerance mode

Turns the switch output ON when the value is within tolerance against the input signal setting value.
The tolerance value can be set on both positive and negative sides, with % F.S. (full scale).
Refer to the wire connection method (page 1504) and example of the internal circuit and load connection (pages 1505, 1506) for the switch output wire connection method.

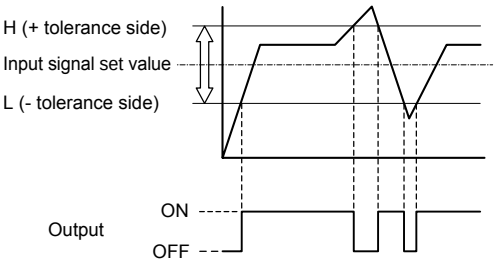

[Operating method]

(1) Instantaneous flow rate display

(2) Press the ▲ key 4 times to enter [F4: Switch output setting screen]. If the switch output setting is enabled, "F4.□" and the present setting value are alternately displayed.
(After 3 secs. have elapsed without pressing the button, the display returns to the instantaneous flow rate display.)

(3) Hold down the SET key for 2 secs. to enter the switch output setting mode.

(4) Press the ▲ key once to start "F4.1" blinking, and hold down SET key for approx. 2 secs. to enter the target value setting screen.

(5) After setting the tolerance value (negative side), hold down SET ▶ key for approx. 2 secs.
Negative side setting range: -50 to 0% F.S.

(6) After setting the tolerance value (positive side), hold down SET ▶ key for approx. 2 secs.
Positive side setting range: 0 to 50% F.S.

(7) The display returns to [F4 screen], and after approx. 3 secs., it returns to the instantaneous flow rate display.

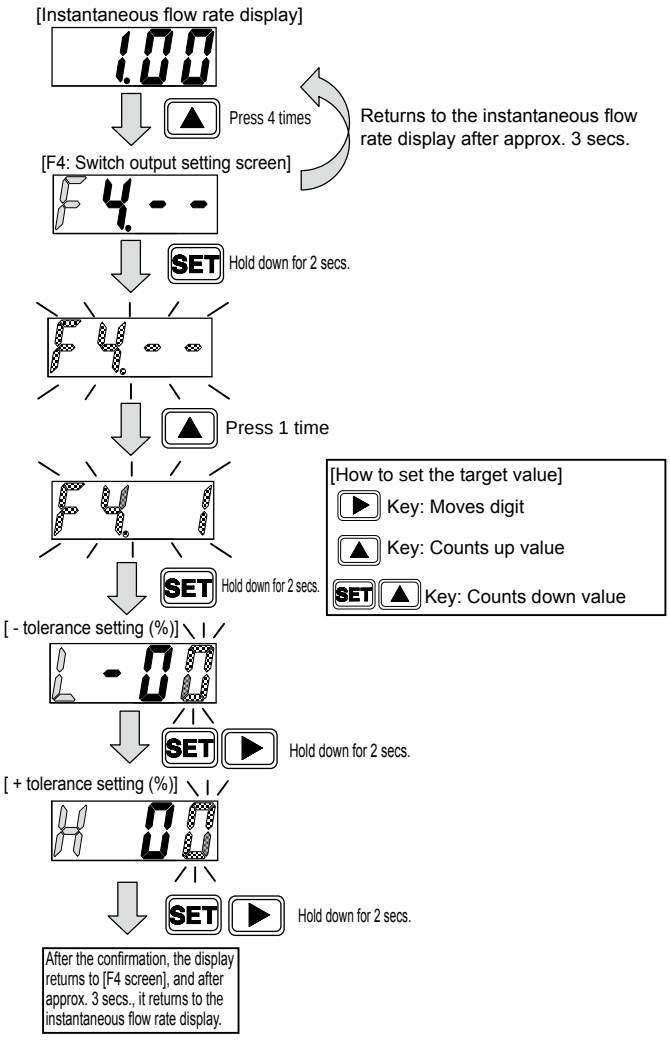

* When "FUL" is selected as the input signal set value (valve fully open), it operates with the tolerance of the set value selected before. As an example, if the input signal set value is changed from 50 L/min to "FUL" (valve fully open), the switch will be turned ON within the tolerance of 50 L/min.

Using the switch output function (switch output only)

(2) When using the designated range mode

The switch output turns ON when the value is outside the designated flow rate range. The upper/lower limits are set regardless of input signal setting value (control target value). Both upper and lower limits can be set, with % F.S. (full scale). Refer to the wire connection method (page 1504) and example of the internal circuit and load connection (pages 1505, 1506) for the switch output wire connection method.

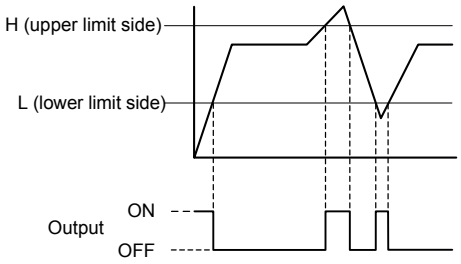

[Operating method]

(1) Instantaneous flow rate display

(2) Press the ▲ key 4 times to enter [F4: Switch output setting screen]. If the switch output setting is enabled, "F4.□" and the present setting value are alternately displayed.
(After 3 secs. have elapsed without pressing the button, the display returns to the instantaneous flow rate display.)

(3) Hold down the SET key for 2 secs. to enter the switch output setting mode.

(4) Press the ▲ key twice to start "F4.2" blinking, and hold down SET key for approx. 2 secs. to enter the target value setting screen.

(5) After setting the lower limit, hold down SET ▶ key for approx. 2 secs.
Lower limit setting range: 0 to 90% F.S.

(6) After setting the upper limit, hold down SET ▶ key for approx. 2 secs.
Positive side setting range: 10 to 100% F.S.
With interval of 10% F.S. or more between the upper limit and lower limit

(7) The display returns to [F4 screen], and after approx. 3 secs., it returns to the instantaneous flow rate display.

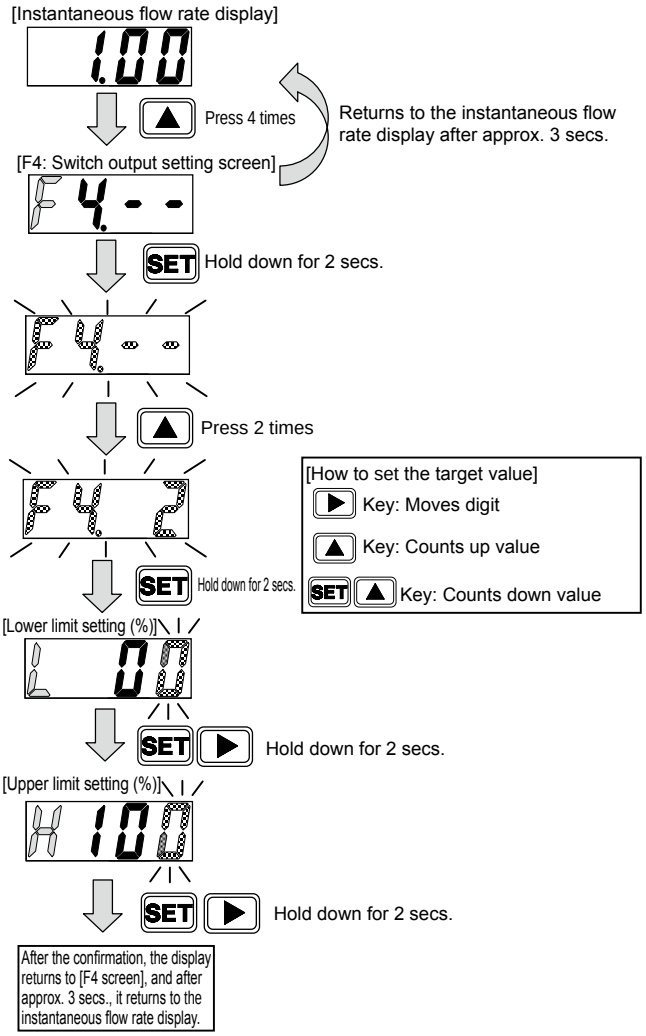

Operating methods (list)

CAUTION: · At shipment, the product is in the unlocked state. Put on key lock if required.
The key locked/unlocked state is retained after turning the power supply OFF.
· The control is not stopped during setting of F1: input signal selection and F2: input signal zero/span.
Taking safety into account, if required, conduct it after stopping the control (forced OFF).
· The flow rate control/forced OFF state is retained even after the power supply is turned OFF.

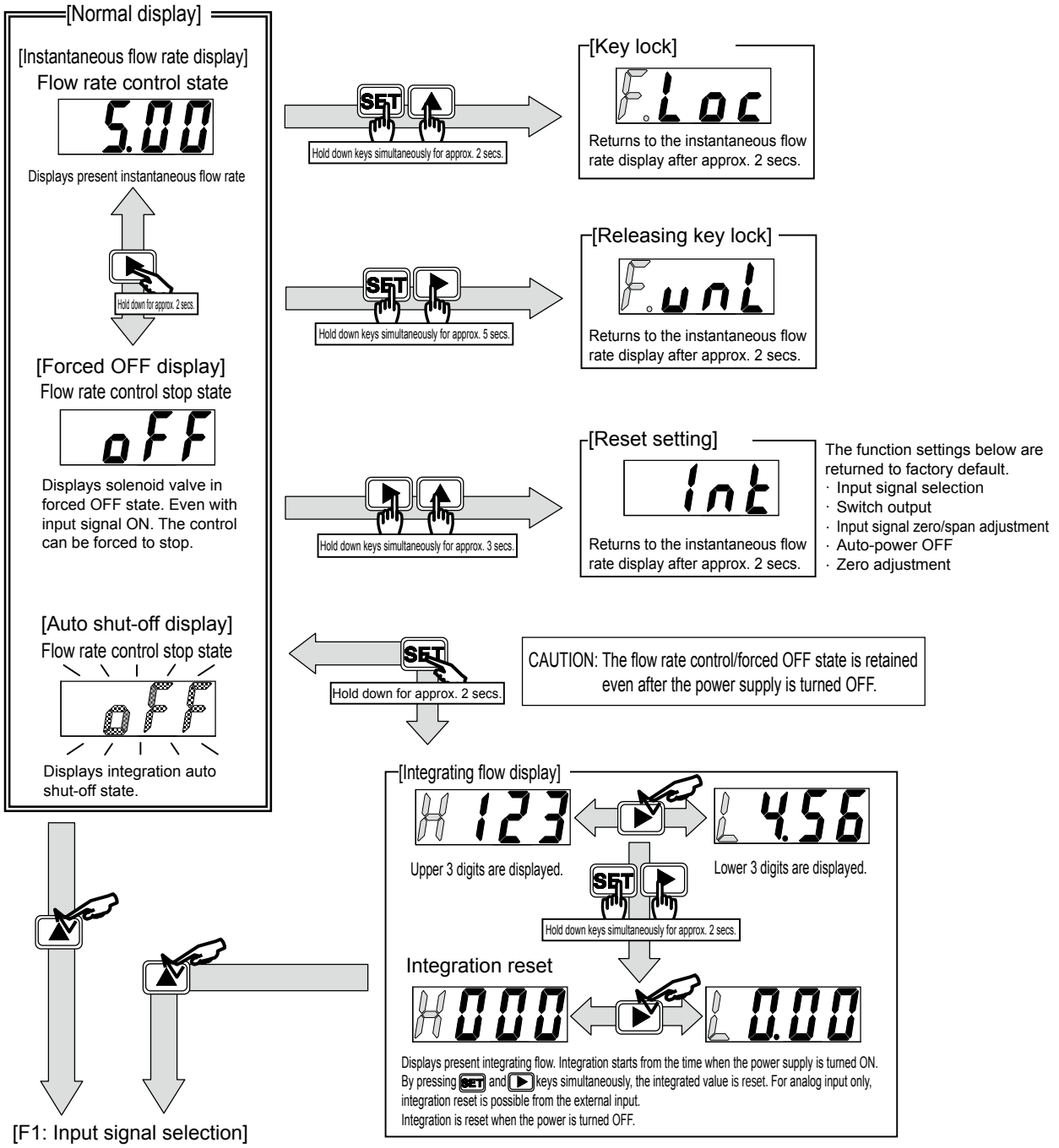

Operating methods (list)

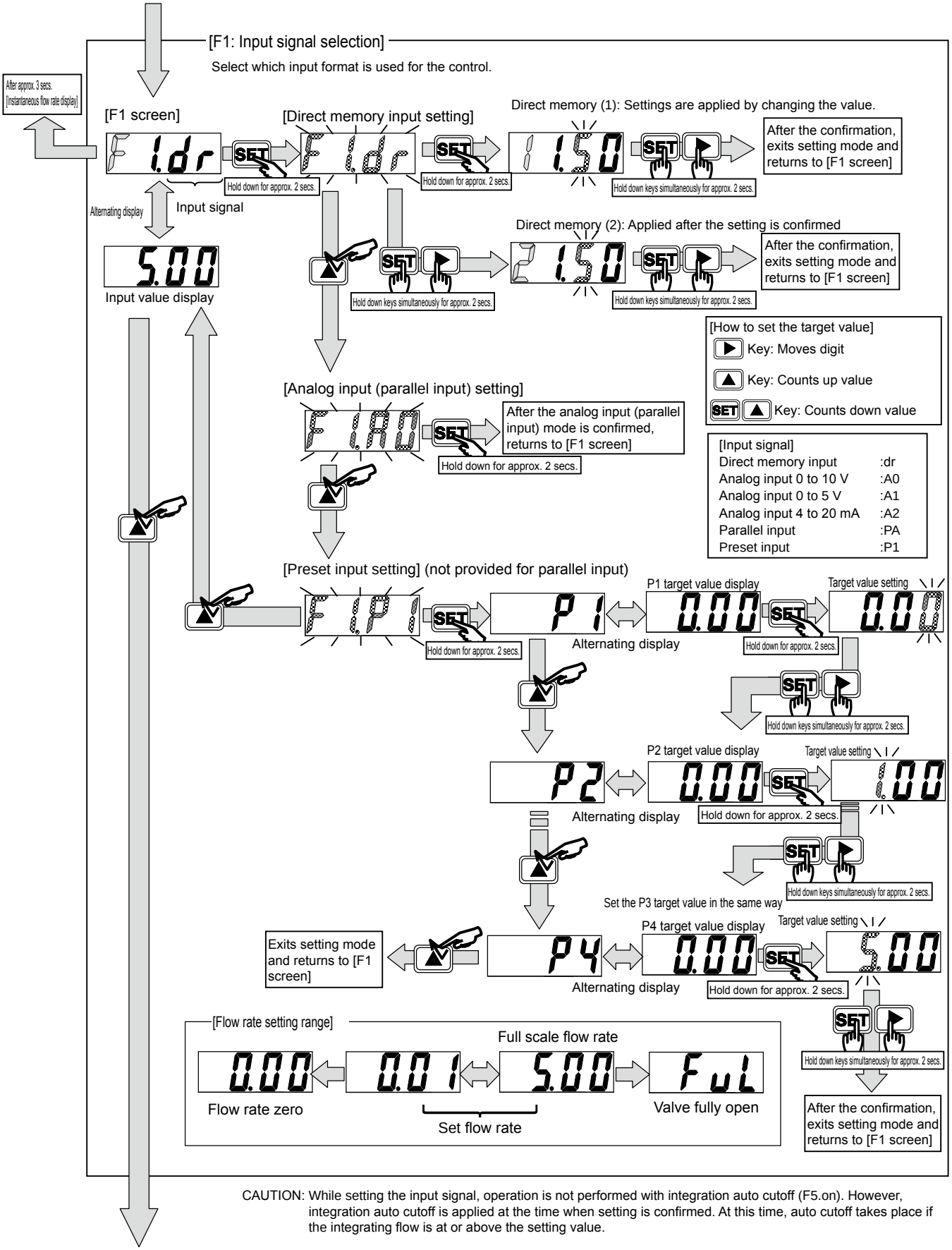

CAUTION: While setting the input signal, operation is not performed with integration auto cutoff (F5.on). However, integration auto cutoff is applied at the time when setting is confirmed. At this time, auto cutoff takes place if the integrating flow is at or above the setting value.

[F2: Input signal zero/span adjustment]

Operating methods (list)

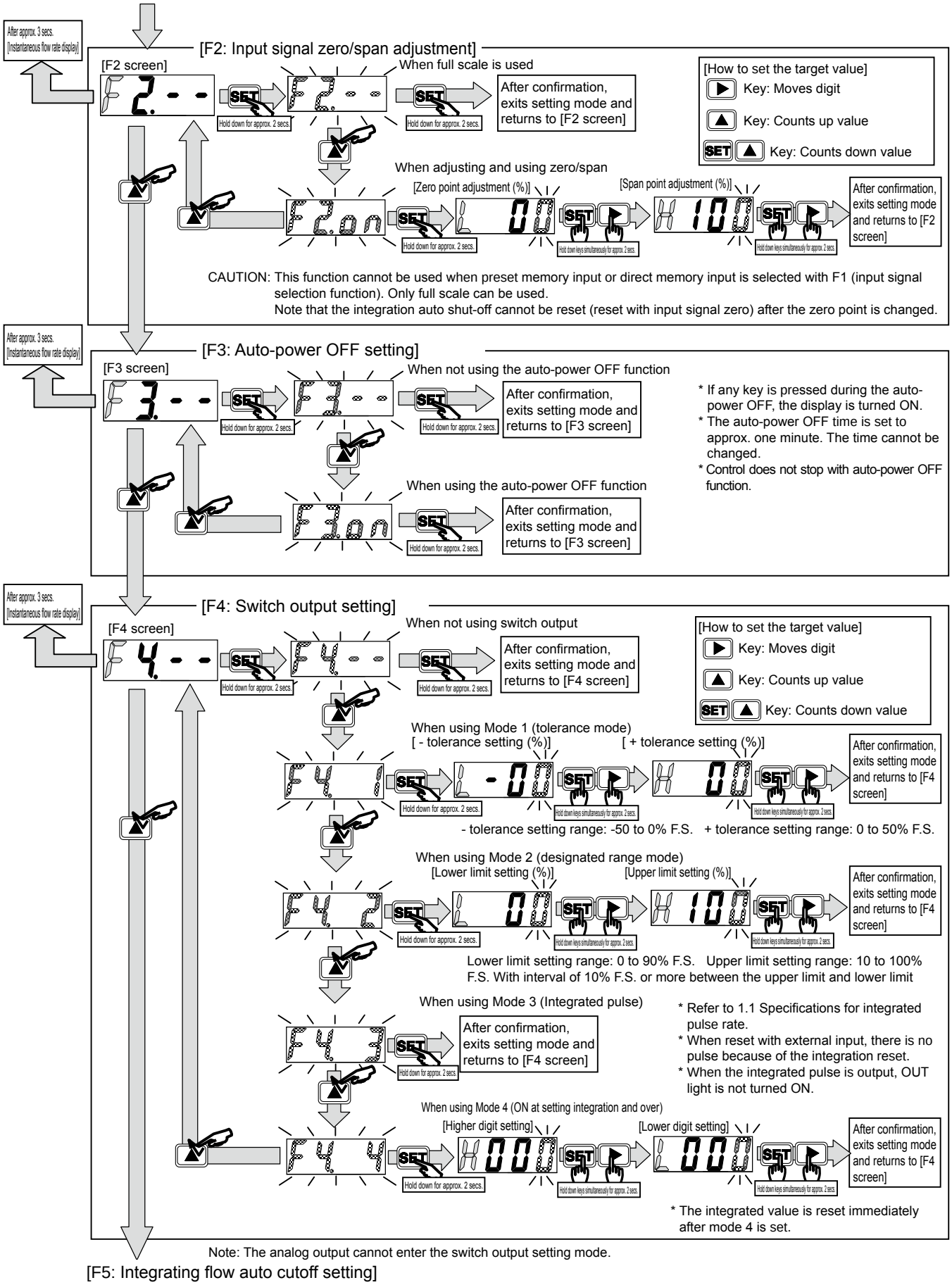

Operating methods (list)

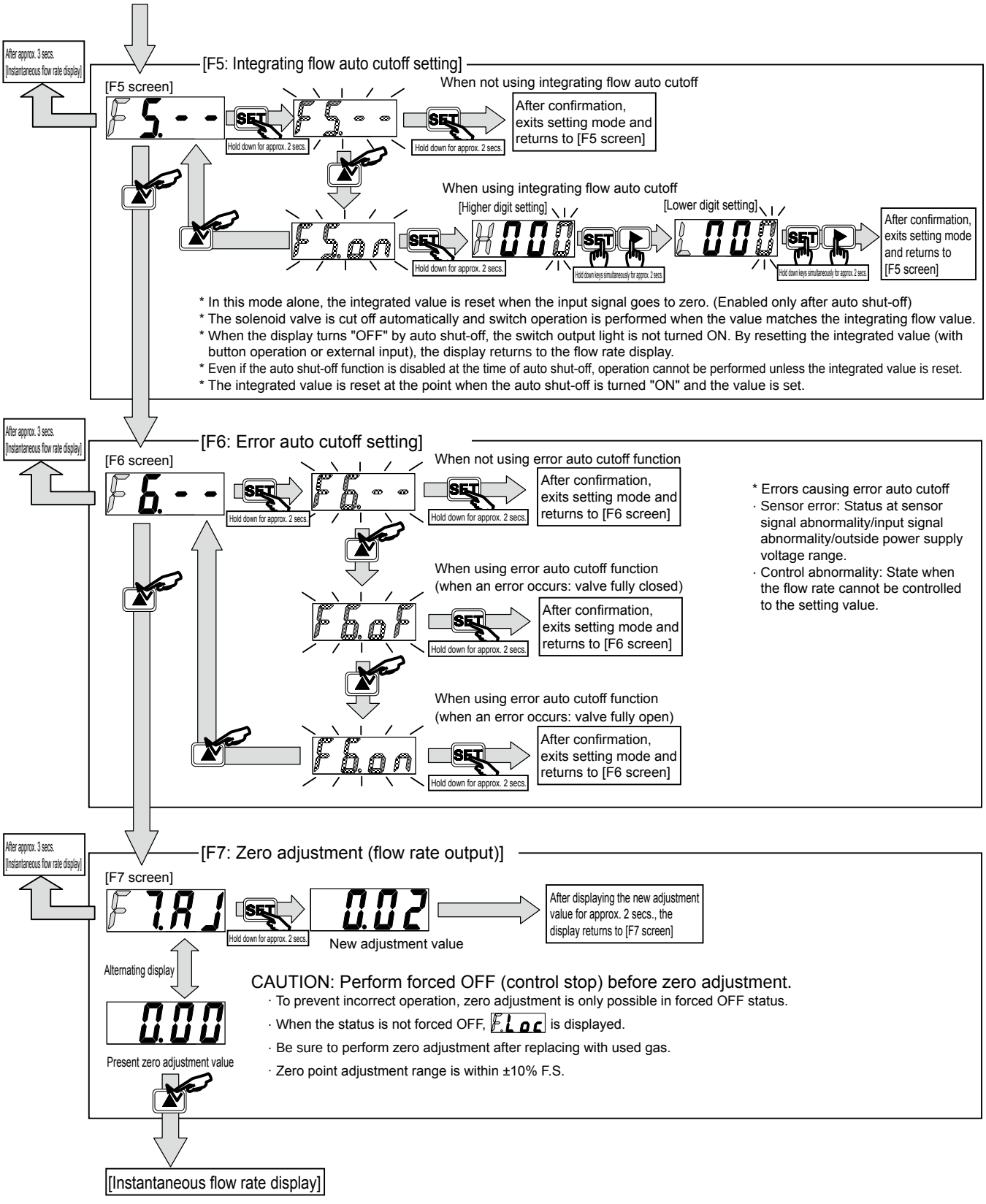

FCM Glossary

Applicable to compact flow rate controller FCM.

Term	Explanation
Control range	Calibration range of this product.
Accuracy	Calibration error from CKD reference device. (Conditions: Temperature 25±3˚C, power supply voltage 24±0.01 VDC, standard differential pressure, secondary side released to atmosphere)
Repeatability	Calculated from variation (D = Max. - Min.) when flow rate controls of 0% F.S. and 50% F.S. are repeated 20 times continuously in a cycle where the control is sufficiently stabilized. (Reproducibility) = ±D/2/FS control flow rate x 100[%]
Temperature characteristics	Indicates the fluctuation of the flow rate value according to changes in the ambient / fluid temperatures (reference 25°C) converted per 1°C. Calibration is performed at a temperature of 25°C.
Pressure characteristics	Indicates the fluctuation of the flow rate value according to changes in the working pressure. Calibration is performed at standard differential pressure.
Standard differential pressure	Differential pressure when this product is calibrated. (Secondary side released to atmosphere)
Operating differential pressure	Differential pressure required for normal operation of this product.
Guaranteed proof pressure	Pressure at which the product will not be damaged.
Display resolution	Min. step at which the display changes.
(Integrated) pulse output rate	Integrating flow per pulse when the integrated pulse is output.
LSB	Indicates the min. digit of parallel input.
MSB	Indicates the max. digit of parallel input.
digit	Digit. Min. value of digital display when decimal points are ignored.
AWG	Abbreviation of American Wire Gauge. Standard for cables.

Flow rate controller

Safety Precautions

Be sure to read this section before use.
Refer to Intro Page 63 for precautions for general pneumatic components.

Product-specific cautions: Compact flow rate controller FCM Series

Design/selection

1. Working fluids

⚠ DANGER

■ Do not feed gas at the explosion limit. There is a risk of explosive accidents.

■ When using this product for hydrogen, be sure to purge with inert gas such as nitrogen or argon before use. Usage without purging with inert gas could result in explosive accidents.

■ For products without oil-prohibited processing in gas-contacting parts, do not feed oxygen gas. Doing so could result in fire. Even for products with oil-prohibited processing, do not use for oxygen gas if the product has been used even once for any other gas.

⚠ WARNING

■ This product cannot be used as a billing meter. Do not use this product for commercial transactions as it is not compliant with the Measurement Act.

■ This product is only for use with the gases indicated in the model No. Do not use fluids other than the applicable fluids, as specifications such as accuracy and control properties cannot be met. In particular, note that if hydrogen gas or helium gas flows into products in this series that is for use with other gases, the sensor safety circuit will activate and the product may not operate. (When the safety circuit is activated, flow rate measurement/control cannot be performed until the power has been turned OFF.)

■ When mixing hydrogen gas or helium gas with a gas other than hydrogen or helium, use caution regarding gas back-flow. If hydrogen gas or helium gas flows into products in this series that is for use with other gases, the sensor safety circuit will activate and the product may not operate. (When the safety circuit is activated, flow rate measurement/control cannot be performed until the power has been turned OFF.) Especially when cutting off the gas, provide individual cutoff valves as in the reference drawing below in order to prevent gas back-flow.

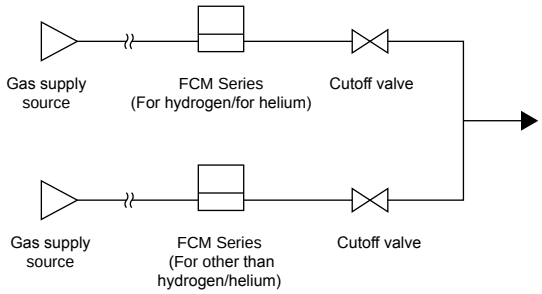

■ Avoid the entry of foreign matter into the product. If foreign matter (dirt, water drops, or oil mist inside the piping, etc.) enters the product, accuracy or control properties may be adversely affected, leading to failure in some cases.
If the entry of foreign matter is possible, install a filter, air dryer, and oil mist filter on the primary side (upstream side) of the product.

- The mesh inside the product rectifies flow in the pipe. Note that it does not filter out foreign matter.
- As compressed air from the compressor contains drainage (water, oil oxides, foreign matter, etc.), install a filter, air dryer, and oil mist filter (micro alescer) on the primary side (upstream side) of the product.
- When using compressed air, use clean air compliant with JIS B8392-1: 2012 (ISO 8573-1: 2010) [1.1.1 to 1.6.2].

[Recommended circuit]

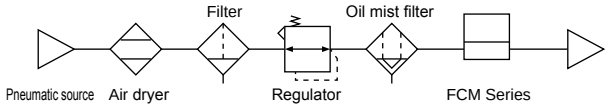

- When using a valve on the primary side of the product, use only valves with oil-prohibited specifications. The product could malfunction or fail if exposed to splattering grease, oil, etc.
- Use dry gas which does not contain corrosive elements such as chlorine, sulfur or acids, and which is clean and does not contain dust or oil mist.
- Depending on the fluid, retaining the fluid for a long time could adversely affect performance. Do not seal the fluid in the pipe for long periods of time.

■ When using the valve with liquefied gases such as propane gas, always vaporize the gas. Failure may result if liquefied gas enters the product.

■ When using this product to control the burner air-fuel ratio, take design measures to prevent backfire and to avoid the effect of backfire on the product. Internal pressure increase in the piping or fire due to burner backfire may lead to failure.

■ Check that the pressure inside the fluid supply line is within the working differential pressure range before using. If the source pressure is low or the pressure at the secondary side is high, the differential pressure becomes insufficient and the fluid does not flow.

■ Due to the flow characteristics of the primary side regulator, the pressure is unstable when the flow rate flows, and FCM output may fluctuate.

Design/selection

2. Working environment

⚠ WARNING

■ Corrosive environments
Do not use this product in an atmosphere containing corrosive gases such as sulfur dioxide.

■ Ambient / fluid temperatures
Use at ambient / fluid temperatures within the specified range of 0 to 50°C.
Even if the temperature is within the specified range, do not use in a location where the ambient / fluid temperatures could suddenly change and cause condensation.

■ Proof pressure/operating differential pressure range
Usage in applications exceeding the proof pressure or outside the operating differential pressure could result in failure. Use only within the specified range. If the source pressure is low or the pressure at the secondary side is high, the differential pressure decreases and the fluid does not flow.

■ Drip-proof environments
The degree of protection of this product is equivalent to IP40. Do not install this product where water, salt, dust, or swarf is present or in a pressurized or depressurized environment. The product cannot be used with large temperature variations or high temperature/ humidity since condensation may occur inside the body.

■ The solenoid proportional valve inside this product does not have a fully closed function.
When a fully closed state is required, separately provide a cutoff valve outside the product.
When the external cutoff valve is closed, keep the product valve in standby at a fully closed state (setting flow rate zero). If the product is left in the normal control state with the external cutoff valve closed, excessive flow is produced for a moment when the external cutoff valve is opened.
When using with frequent ON/OFF operations, its service life as a proportional valve may be reduced depending on the working conditions.

■ Do not install this product in movable sections or where it will be subject to vibration. Vibration or impact may lead to malfunction.

⚠ CAUTION

■ Check for leakage current to avoid malfunction caused by leakage current from other fluid control components. When using a PLC, etc., leakage current could cause the product to malfunction.

■ When the current input is wired, the power ground and signal common are shared.
When operating this product in multiples with one PLC and D/A unit, depending on the D/A unit circuit, wiring trouble could prevent the correct signal from being input. Consult with the PLC manufacturer for use.

■ The current input can be used with an input signal of 1 to 5 V. However, because input impedance is small (250 Ω) when comparing to other voltage input, use an appropriate voltage generator.

■ Be alert for pressure loss in the piping.
When piping to this product, keep the differential pressure between upstream and downstream sides within the operating differential pressure range (refer to pages 1497 and 1499). Using the product outside the operating differential pressure range could cause incorrect operation.
In particular, an orifice or restriction in the secondary side (downstream side) of the product could cause incorrect operation. Please be careful.
In addition, the pressure on the primary side or secondary side of the product may fluctuate repeatedly, or the product control may not be able to track pressure changes, leading to unstable flow rate control.

■ Working conditions for CE compliance
This product is CE-marked, indicating conformity with the EMC Directives. The standard for the immunity for industrial environments applied to this product is EN61000-6-2; the following requirements must be satisfied in order to conform to this standard:
Conditions
- The assessment of this product is performed by using a cable pairing a power supply line and a signal line, assessing this cable as a signal line.
- This product is not equipped with surge immunity. Implement surge protection measures on the system side.

3. Flow rate unit

⚠ CAUTION

■ This product's flow rate is measured at a mass flow rate unaffected by temperature or pressure. The unit is L/min., but this is the display when the mass flow rate is converted to volumetric flow rate at 20°C 1 barometric pressure (101 kPa) relative humidity 65%.

Mounting, installation and adjustment

1. Wiring

⚠ DANGER

■ Use power supply voltage and output within the specified voltage. If voltage exceeding the specified voltage is applied, the product could malfunction or be damaged, or electrical shock or fire could occur. Do not use any load that exceeds the rated output. Otherwise, output damage or fire may result.

⚠ WARNING

■ Check the connector pin and cable conductor wire color when wiring. Incorrect connections could cause product damage, problems, or malfunctions. Check the wire color against instructions and precautions before wiring.

■ Ensure that wires are properly insulated. Check that wires do not come into contact with other circuits, that no ground faults occur, and that the insulator between terminals is not defective. Otherwise, overcurrent may flow into the product, causing damage.

■ Use a stabilized DC power supply within the specified rating that has been insulated from the AC power supply. A non-insulated power supply could result in electrical shock. If power is not stabilized, the peak value in hot summer could exceed the rating and damage the product or reduce precision.

■ Stop the control device and equipment and turn power OFF before wiring. Starting operation suddenly could cause unpredictable and dangerous operation. First, conduct an energized test with controls and machinery stopped, and set target data. Be sure to discharge any accumulated electrostatic charge among personnel, tools, or equipment before and during work. Connect and wire bending resistant material, such as robot wire material for movable sections.

■ Do not use at levels exceeding the power supply voltage range. The product could rupture or burn if voltage exceeding the specification range or AC power supply (100 VAC) is applied.

■ Install this product and wiring as far away as possible from sources of noise such as power distribution wires. Provide separate countermeasures for surge applied to the power cable.

■ Do not short-circuit the load. Failure to observe this could result in rupture or burning.

■ The power supply for the stainless steel body is a DC stabilized power supply completely isolated from the AC primary side. Connect either the + side or - side of the power to the F.G. Between the internal power circuit and stainless steel body, a varistor (limit voltage approx. 40 V) is connected to prevent dielectric breakdown of the product. Do not conduct a withstand voltage test or insulation resistance test between the internal power circuit and stainless steel body. Disconnect wiring first if this testing is required. An excessive potential difference between power and stainless steel body will burn internal parts. After installing, connecting and wiring the stainless steel body, electrical welding of the device/frame, or short-circuit accidents, etc., could cause welding current, excessive high voltage caused by welding, or surge voltage, etc., to run through wiring, ground wire, or fluid path connected between such devices, damaging wires or devices. Conduct any work such as electrical welding after removing this device and disconnecting all electric wires connected to the F.G.

⚠ CAUTION

■ The optional shield cable connector is a shielded wire. Insulate wires not being used so that they do not contact other wires, including shielded wires. Unintended connection to the ground, etc., could cause malfunction or damage the product.

■ Check the direction of the D sub-connector, and then insert and fit it securely through to the back.

■ Lock the D sub-connector so that it will not be dislocated. Before loosening the lock, fix the fixing block with a tool, etc.

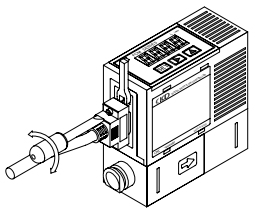

■ Extension of cable
When extending the cable beyond 3 m, the analog output and analog input error may increase or the control may become unstable due to wiring resistance. Use of a cable within 3 m is recommended.

Mounting, installation and adjustment

2. Piping

⚠CAUTION

■ Align the fluid flow direction to the direction indicated on the body when connecting the pipes.

■ Fitting tightening with 4S, 4RM port size (hydrogen/helium model).

(1) Fitting tightening method

4RM (1/4" JXR male fitting)...when the gasket material is nickel/SUS316

Tighten the nut with fingers until the gasket contacts the bead surface, and then tighten another 1/8 turn with a tool.

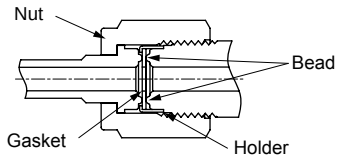

4S (double barbed fitting)...Confirm that the front ferrule, back ferrule and nuts are properly attached, and then insert the tube until it contacts the back of the body. Tighten the nuts as far as possible with fingers, and then tighten 1 1/4 turn with a tool.

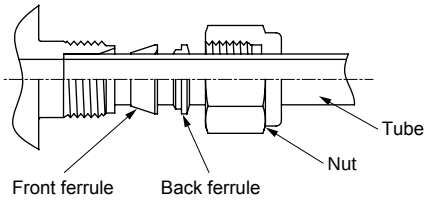

■ Before piping, clean out the pipes using an air blower to remove all foreign matter and cutting chips from the pipes. The rectifier or platinum sensor could be damaged if foreign matter, cutting chips, etc., should enter.

■ When installing this product on piping, refer to the torque below so that excessive screw-in torque or load torque is not applied to the connection port.

Port thread	Tightening torque N·m
Rc1/4	6 to 8
9/16-18UNF	6 to 8

■ Hook a wrench to the stainless steel body when tightening pipes so that force is not applied to the resin section.

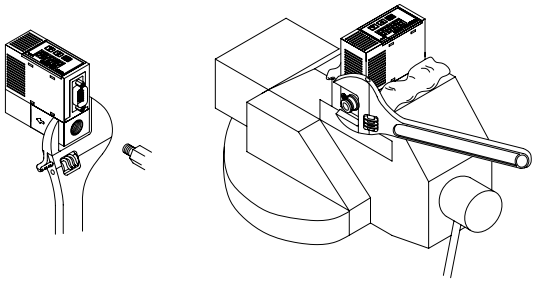

■ Make sure that no sealing tape or adhesive enters the pipes when connecting the piping.

■ When connecting pipes, wrap sealing tape in the opposite direction from the threading, from the inside position to within 2 mm from the pipe end.

- If sealing tape protrudes from the pipe threads, it could be cut when screwing the bolts in. This could cause the tape to enter the solenoid valve, causing failures.

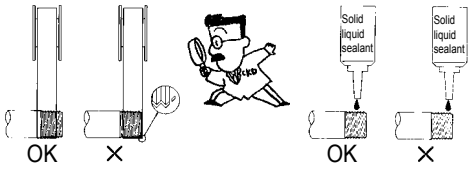

When using a liquid sealant, make sure to keep it away from resin parts. Otherwise resin parts could be damaged, which is dangerous.

■ If the piping is removed once, sealant may remain on the thread part.
When repiping, remove the remaining sealant.

■ Be sure to connect a fitting even when using the stainless steel body with the OUT side opened. The port filter could come OFF.

■ When the resin body is used, do not bend the tube near the push-in fitting. If stress is applied to the tube near the push-in fitting, insert an insert ring into the tube, and connect the tube to the push-in fitting.

■ When the resin body is used, securely insert the tube, and make sure that it cannot be pulled out. Cut the tube at a right angle with a dedicated cutter before use.

■ After piping, check that there are no gas leaks.

■ When using this product for oxygen gas, take special care with the points below.

- The piping work should be performed by an expert in the handling of oxygen gas.
- Use piping with oil-prohibited processing.
- Make sure to remove dirt, burrs, etc., in the piping before installing the product.
- Install a filter on the primary side of the product.

■ Do not install the regulator/solenoid valve, etc., immediately before this product. Generated drift may cause errors. Provide a straight piping section if required.

■ Although the mounting is "unrestricted in vertical/horizontal direction", the flow rate may vary depending on difference in the mounting orientation or piping conditions.

■ Do not install multiple bodies in close contact. The mutual generation of heat could cause the product body's temperature to rise, hastening changes in characteristics or in the resin material. When using the products in a row, set intervals of distance of 10 mm or more.

Use/maintenance

⚠WARNING

■ Output accuracy is affected by temperature characteristics and heat generated when energized. Provide sufficient stand-by time (10 minutes or more after energizing) before use.

⚠CAUTION

■ This product uses a micro-sensor chip, and must be installed where it will not be subject to dropping, impact or vibration. Treat the product as a precision component during installation and transportation.

■ If a problem occurs during operation, immediately turn the power OFF, stop use and contact your dealer.

■ Immediately after power is turned ON, the product does not start flow rate control operation for approx. 2 seconds to complete self-diagnosis. Provide a control circuit/program that ignores signals for at least two seconds after power is turned ON.

■ Keep this product's flow rate within the rated flow range.

■ Use the product within the operating differential pressure range.

■ When changing the setting value, turn OFF the equipment first in order to prevent unexpected operation of the control system.

■ Do not disassemble or modify, as this may cause malfunction.

■ The case is made of resin. Do not use solvent, alcohol or detergent in cleaning, or resin could absorb it. There is a risk of affecting the resin. Wipe off dirt with a rag soaked in a diluted neutral detergent solution and wrung out well.

■ Pay attention to surge current leading.

When the power supply for this product is shared with an inductive load that generates surges, such as a solenoid valve or relay, if the circuit is cut off while the inductive load is functioning, surge current could enter the switch output circuit and cause damage depending on where the surge absorbing element is installed.

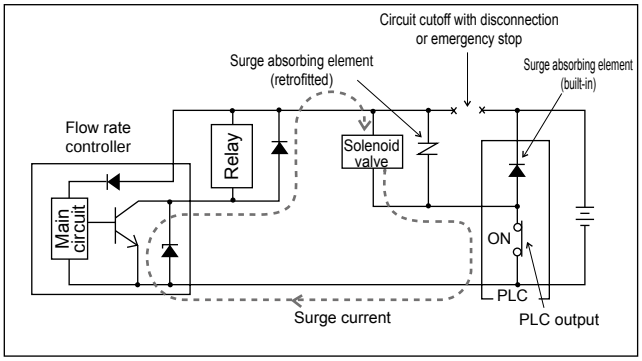

Take the measures as written on the right to prevent damage from sneak surge current.

(1) Separate the power supply for output including the inductive load, such as the solenoid valve and relay, and input, such as the flow rate controller.
(2) If a separate power supply cannot be used, directly install a surge absorption element for all inductive loads. Consider that the surge absorption element connected to the PLC, etc., protects only the individual device.
(3) Connect a surge absorption element to places on the power wiring shown in the figure below, as a measure against disconnections in unspecified areas.

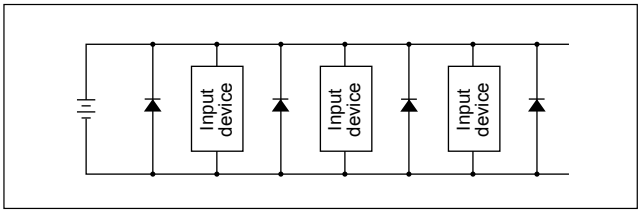

When the devices are connected to a connector, the output circuit could be damaged by the above phenomenon if the connector is disconnected while the power is ON. Turn power OFF before connecting or disconnecting the connector.

■ The accuracy may vary from the initial status depending on the working environment or working conditions. It is recommended to check the operation of the product periodically.

■ The sensor chip will degrade when used for a long time and cause the detected flow rate to fluctuate. Periodically inspect the sensor chip.

Flow sensor for compressed air

PFD/PFK (Display separated FLUEREX flow sensor)

■ **Sensors/controller/flow rate sensor**

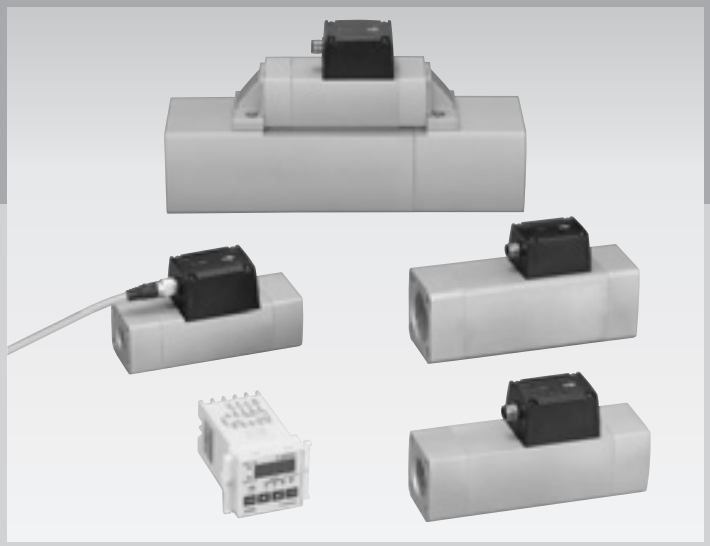

CONTENTS

Product introduction	1530
Applications	1532
● FLUEREX flow sensor (PFD) display separated	1534
● Tester kit (PFK)	1540
Electric wiring	1544
Functions/operations for monitor	1546
⚠Safety precautions	1548

Tester kit PFK Series
Planned for end of production March 2022.

Contributing to the global environment with energy saving control.

Plan
Analyzing the current state

- Measurement of the current flow rate
- Review of actions

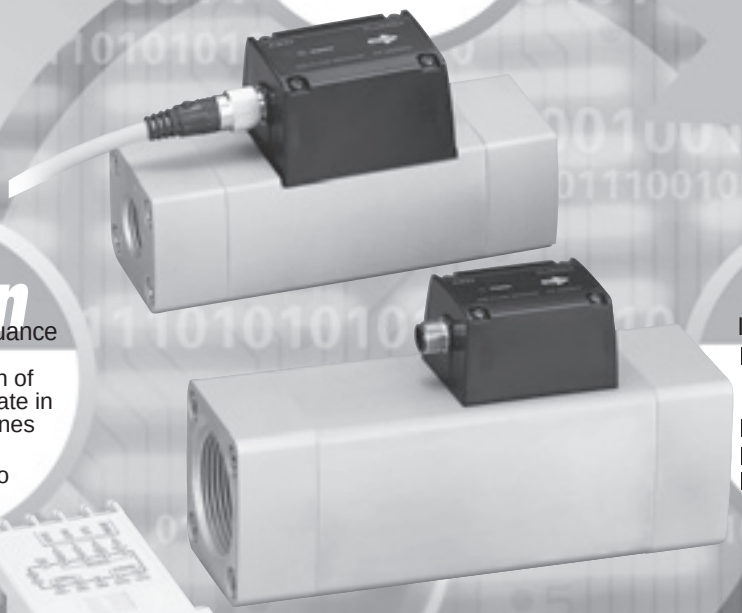

Do
Implementing actions

- Stop air pressure supply when system is not operating
- Shorten blow time
- Use energy-saving nozzle
- Lower pressure

Action
Revision and continuance

- Standardization of consumption rate in systems and lines
- Horizontal development to other lines



Check
Confirmation of effect

- Measure with flow rate sensor
- Calculate costs with integrating function

Flow rate sensor for compressed air

FLUEREX PFD Series

PFD Series FLUEREX flow rate sensor for compressed air assists in analyzing current energy consumption and confirming the effect.

Ample output variations

- Output function
  - Digital display
    - Instantaneous flow *1
    - Integrated flow *1
  - Switch output
    - NPN transistor *2
    - PNP transistor *2
  - Integrated pulse output
    - Transistor output *3
  - Analog output
    - 0 to 5VDC (standard)
    - 4 to 20 mADC (option)
    - 1 to 5VDC (option)
    - 0 to 10VDC (option)

*1. Switch between the instantaneous flow and integrated flow with a single touch.
*2. Select NPN or PNP for the switch output. Two output points are provided. (PFK Series has 1 point)
*3. Change one of the switch outputs to an integrated pulse output with easy operation.

Optimum for ISO 14001 acquisition

The lineup includes a large flow which supports energy saving control in factory units. This device is essential for acquiring ISO14001, the International Standardization Standard for environment management systems.

Directly read digital displays with no need for calibration

Since bothersome pressure correction and temperature compensation are not required, the digital display value can be read and used.

- Pressure correction not required
  Method of detecting weight flow adopted
- Temperature correction not required
  Automatic temperature compensation function built in

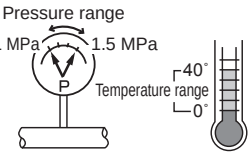

High precision with general precision of ±4%F.S.

General precision of ±4%F.S. is realized in a temperature range of 10 to 30°C and pressure range of 0.2 to 0.7 MPa even without calibration.

$$\text{Total precision} = \pm\sqrt{(\text{linearity})^2 + (\text{temperature characteristics})^2 + (\text{pressure characteristics})^2}$$

(Note) The general precision is the reference value including all errors including the errors from temperature or pressure variation and the linearity, etc.

Convenient portable kit available

Five types of tester kits consisting of a sensor section, monitor section and piping, etc., in a trunk case are available.

- Piping and wiring can be changed with a single touch.

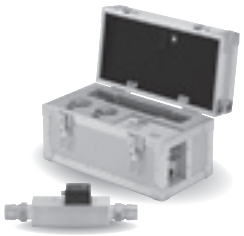

Covering a wide range of flow rates with 11 types

Standard (port size)	Kit (port size)	Flow range [L/min. (normal)]
PFD-501 (Rc3/8)	PFK-501 (Rc1/2)	25 – 500
PFD-102 (Rc1/2)	PFK-102 (Rc1/2)	50 – 1000
PFD-202 (Rc3/4)	PFK-202 (Rc1)	100 – 2000
PFD-402 (Rc1)	PFK-402 (Rc1)	200 – 4000
PFD-802 (Rc1 1/2)	PFK-802 (Rc1 1/2)	400 – 8000
PFD-163 (Rc2)	———	800 – 16000

10 · 100 · 1,000 · 10,000 · 100,000

* Coupler connections are used for the PFK Series.

Applications of flow sensor for compressed air

For flow rate management of production line of an auto plant

■ Auto line control

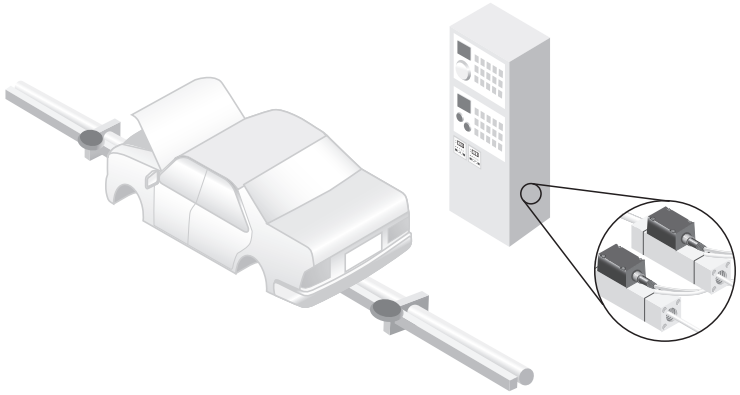

■ Paint line robot

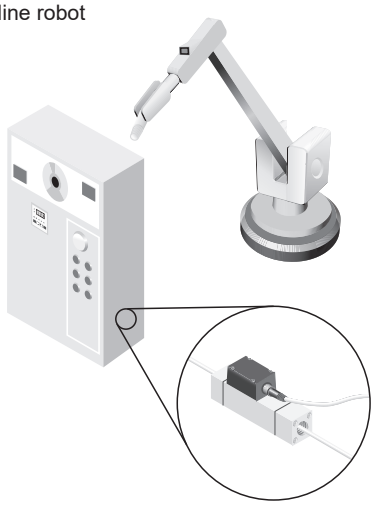

For flow rate management of FPD manufacturing equipment

■ Ionizer

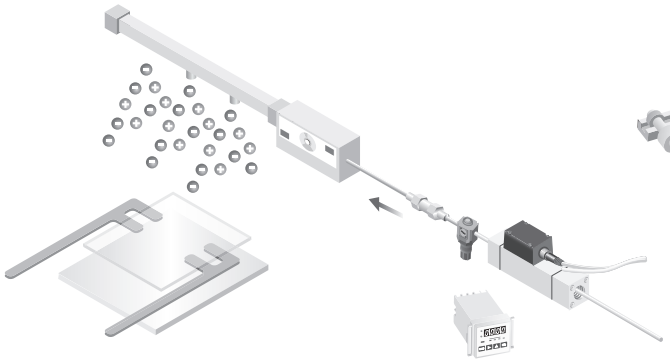

■ Air knife

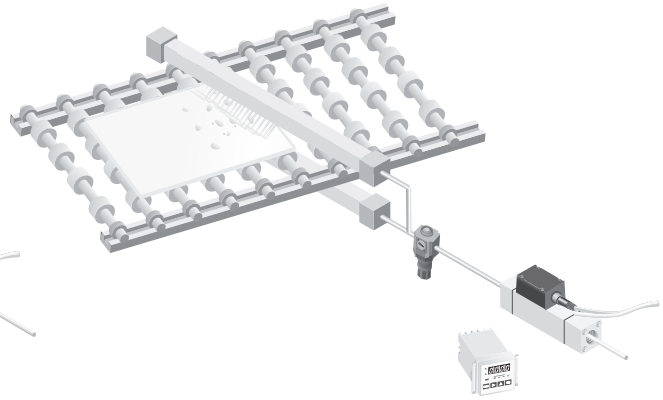

Functions

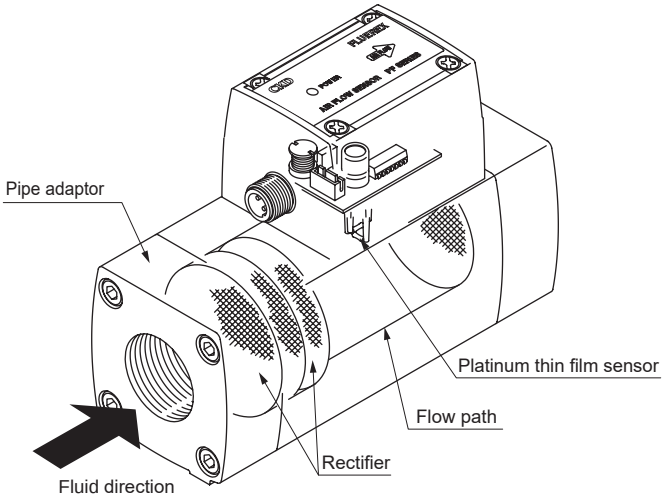

The sensor of FLUEREX consists of a rectifier that converts the compressed air to a uniform flow and a platinum thin film resistor that detects the flow rate. The rectifier works to make the flow uniform when a bent pipe such as an elbow is installed immediately before the sensor. Through the use of multiple rectification plates, the pressure loss is suppressed and an adequate rectification effect is realized. When the compressed air does not flow, the platinum thin film sensor that detects the flow rate is heated from the fluid temperature to a certain constant temperature. When the compressed air flows, the amount of heat proportional to the weight of air is detracted and the current that intends to maintain the constant temperature flows in the circuit inside the platinum thin film sensor that detects the flow rate. By receiving this current as a flow rate signal, the display section displays a practical atmospheric pressure, instantaneous flow rate or integrating flow of the air converted to 0°C. In addition, by the platinum thin film sensor that detects the fluid temperature, the temperature of the compressed air is measured and the temperature correction is performed.

MEMO

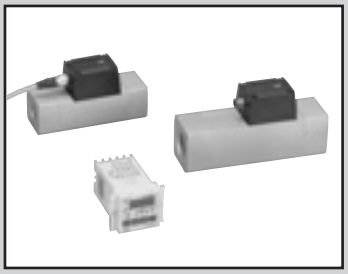

FLUEREX flow sensor

PFD Series

● Flow rate range: 25 to 500, 50 to 1000, 100 to 2000, 200 to 4000
400 to 8000, 800 to 16000 L/min (normal)

Features

● Total accuracy The flow rate is detected with ±4% F.S.
● The correction due to pressure fluctuation or temperature fluctuation is not required.
● The flow rate converted to the reference state (0°C, 101.3 kPa) is displayed.
● The integration display and integrated value pulse output are possible.
● A wide range of functions and variations such as flow rate range and various electric outputs.

Specifications

Item			PFD-501-10	PFD-102-15	PFD-202-20	PFD-402-25	PFD-802-40	PFD-163-50
Specs	Flow rate range	L/min(normal)	25 to 500	50 to 1000	100 to 2000	200 to 4000	400 to 8000	800 to 16000
	Port size		Rc3/8	Rc1/2	Rc3/4	Rc1	Rc1 1/2	Rc2
Working conditions	Applicable fluid		Compressed clean air/nitrogen gas					
	Air quality		JIS B8392-1: 2012 (ISO 8573-1: 2010) [1:1:1 - 1:6:1] (*1)					
	Max. working pressure	MPa	1.0 (≈150 psi, 10 bar)					
	Min. working pressure	MPa	0.1 (≈15 psi, 1 bar)					
	Proof pressure	MPa	1.5 (≈220 psi, 15 bar)					
	Ambient temperature	°C	0 (32°F) to 50 (122°F)					
	Ambient humidity		85% R.H. or less (no condensation)					
	Fluid temperature	°C	0 (32°F) to 40 (104°F)					
Accuracy	Linearity		±3.0% F.S. (0.5 MPa (≈73 psi, 5 bar), at 20°C (68°F))					
	Pressure characteristics		±2.0% F.S. (0.5 MPa (≈73 psi, 5 bar) reference, at 0.2 (≈29 psi, 2 bar) to 0.7 MPa (≈100 psi, 7 bar))					
	Temperature characteristics		±2.0% F.S. (20°C (68°F) reference, at 10 (50°F) to 30°C (86°F))					
Pressure loss		MPa	0.015 (≈2.2 psi, 0.15 bar) or less (max. flow rate, at 0.5 MPa (≈73 psi, 5 bar))					
Response time		sec	2.5 or less					
Output	Display		Instant/integrating flow 4-digit LED display					
	Resolution	L/min(normal)	1	5	5	10	20	50
	Min. displayed flow rate	L/min(normal)	10	20	40	80	160	320
	Integrating flow		Max. 9 digits (switching display using change key) (*4)					
	Analog output		Standard: 0 to 5 VDC/option: 4 to 20 mADC, 1 to 5 V, 0 to 10 V					
	Switch output		2 points (NPN/PNP transistor output: selection)					
	Pulse output (*2)		10 L (normal)/pulse				100 L (normal)/pulse	
Power supply voltage		V	24 VDC (6 W or less/excluding load current of switch output)					
Cable			Accessory (3 m, 4-conductor, finish diameter ø6, cable conductor 0.5 mm^2, insulator O.D. 1.72 mm, with connector)					
Mounting	Mounting orientation		Unrestricted in vertical/horizontal directions					
	Straight piping section		IN side: 10D, OUT side: 5D, these are recommended (*3)					
Degree of protection			IP64 equivalent (only for sensor)					
Weight		kg	1.1	1.1	1.3	1.4	1.7	4.5
Bracket weight		g	61 (including screws)				92 (including screws)	-

*1 : Note that condensation may be formed when used in a state with ambient temperature lower than fluid temperature.
Be careful that detection failure may occur if transmitted oil is accumulated. Because this kit does not have clean specifications for equipment, the generation of particles occurs on the secondary side. When the ultra clean air is required, it is recommended to install a filter for precise filtration on the end side.
*2 : The pulse output is shared with the switch output. Use this output by switching the function.
*3 : Providing straight piping sections is recommended so that the piping conditions do not affect the performance (D is inner diameter of the pipe).
*4 : The data of integrating flow value is backed up regularly. It can also be backed up by operation. Refer to “Functions/operations” on page 1546 for details.

How to order

● Separated display

PFD- 501 - 10 N 0 - B

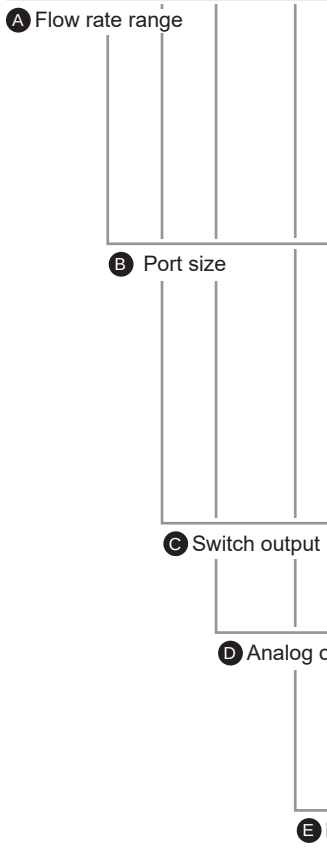

Code	Description
Ⓐ Flow rate range	
501	25 to 500 L/min (normal)
102	50 to 1000L /min (normal)
202	100 to 2000L /min (normal)
402	200 to 4000L /min (normal)
802	400 to 8000L /min (normal)
163	0.80 to 16.00m^3/min (normal)

Ⓑ Port size

Flow rate range		501	102	202	402	802	163
10	Rc3/8	●					
15	Rc1/2		●				
20	Rc3/4			●			
25	Rc1				●		
40	Rc1 1/2					●	
50	Rc2						●

Ⓒ Switch output	
N	NPN transistor output x 2
P	PNP transistor output x 2

Ⓓ Analog output		
0	0 to 5 VDC	Standard
1	4 to 20 mADC	Option
2	1 to 5 VDC	Option
3	0 to 10 VDC	Option

Ⓔ Bracket	
Blank	No Standard
B	Bracket included Option

⚠ Precautions for model No. selection

*1: Bracket option is not available for PFD-163.
*2: The product consists of sensor, monitor and cable.
The description on the plate is as follows.
The model No. is not indicated on the cable.

Product: PFD-(A)-(B)(C)(D)-(E)
Sensor section：PFD-(A)-(B)
Monitor:PFD-(A)-(C)(D)

[Example of model No.]

PFD-501-10N0-B

Model: PFD
Ⓐ Flow rate range : 25 to 500 ℓ/min (normal)
Ⓑ Port size : Rc3/8
Ⓒ Switch output : NPN transistor output
Ⓓ Analog output : 0 to 5 VDC
Ⓔ Bracket : Attached

● Discrete option model No.

PFD-C3

Code	Description
C3	Standard cable
B	Bracket (for 501/102/202/402)
B1	Bracket (for 802)

Internal structure and parts list

● PFD-501 to PFD-802

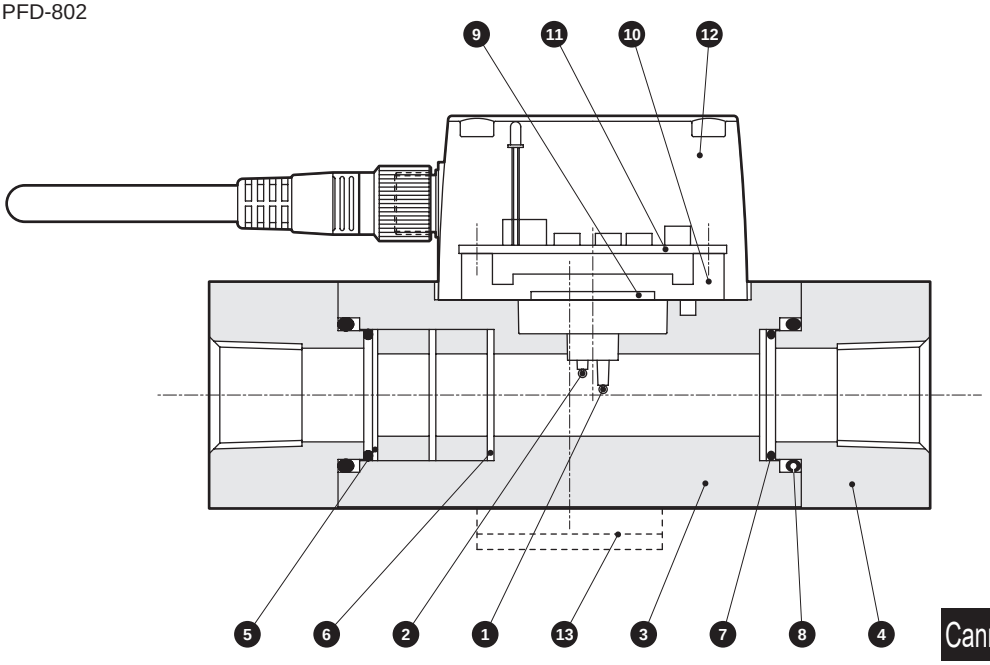

Cannot be disassembled

No.	Part name	Material		No.	Part name	Material	
1	Platinum thin film sensor 1		Alumina/platinum	7	O-ring	NBR	Nitrile rubber
2	Platinum thin film sensor 2		Alumina/platinum	8	O-ring	NBR	Nitrile rubber
3	Body	A6063S	Aluminum alloy	9	Sensor base board		Glass epoxy
4	Adaptor	A6063S	Aluminum alloy	10	Sensor base	PBT	Polybutylene terephthalate
5	Rectification plate	SUS304	Stainless steel	11	Sensor board		Glass epoxy
6	Mesh	SUS304	Stainless steel	12	Cover	ABS	ABS resin
				13	Bracket	SUS304	Stainless steel

● PFD-163

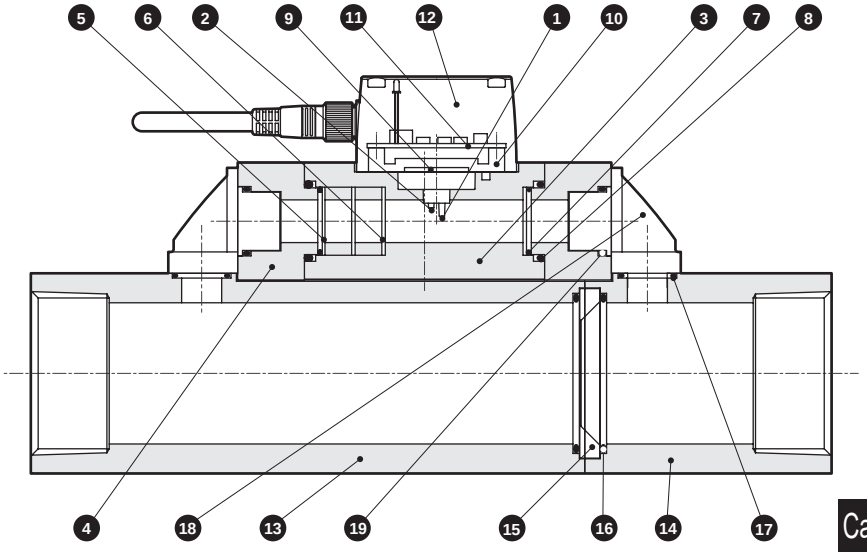

Cannot be disassembled

No.	Part name	Material		No.	Part name	Material	
1	Platinum thin film sensor 1		Alumina/platinum	11	Sensor board		Glass epoxy
2	Platinum thin film sensor 2		Alumina/platinum	12	Cover	ABS	ABS resin
3	Body	A6063S	Aluminum alloy	13	Flow path 1	A6063S	Aluminum alloy
4	Split-flow adaptor	A6063S	Aluminum alloy	14	Flow path 2	A6063S	Aluminum alloy
5	Rectification plate	SUS304	Stainless steel	15	Orifice	C3604BD	Copper alloy
6	Mesh	SUS304	Stainless steel	16	O-ring	NBR	Nitrile rubber
7	O-ring	NBR	Nitrile rubber	17	O-ring	NBR	Nitrile rubber
8	O-ring	NBR	Nitrile rubber	18	Sub-attachment	SCS13	Stainless steel
9	Sensor base board		Glass epoxy	19	O-ring	NBR	Nitrile rubber
10	Sensor base	PBT	Polybutylene terephthalate				

Dimensions

● PFD-501 to 802

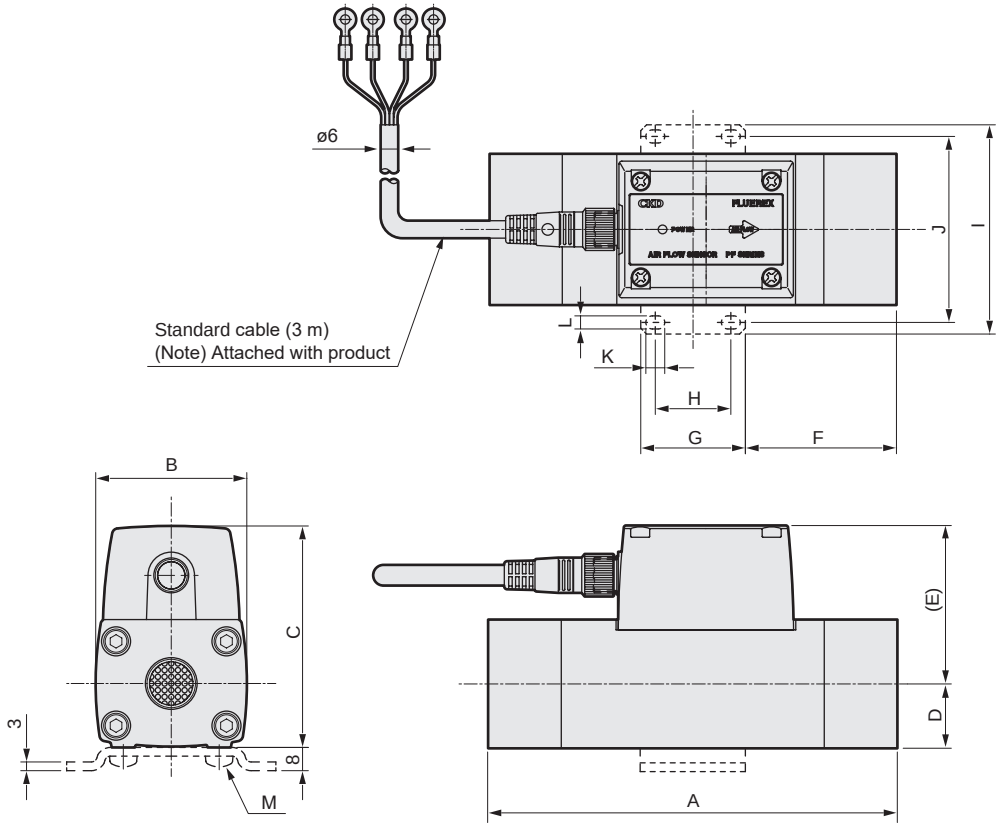

Model No.	Port size
PFD-501-10	Rc3/8
PFD-102-15	Rc1/2
PFD-202-20	Rc3/4
PFD-402-25	Rc1
PFD-802-40	Rc1 1/2

Model No.	A	B	C	D	(E)	F	G	H	I	J	K	L	M
PFD-501/102	140	52	76.2	22	54.2	52	36	26	72	64	6.5	4.5	M4 thread depth 6
PFD-202	150	55	87.2	27.5	59.7	57	36	26	72	64	6.5	4.5	M4 thread depth 6
PFD-402	175	55	90.7	27.5	63.2	69.5	36	26	72	64	6.5	4.5	M4 thread depth 6
PFD-802	190	65	103.7	34	69.7	75	40	26	94	80	8	6	M5 thread depth 8

● Monitor section

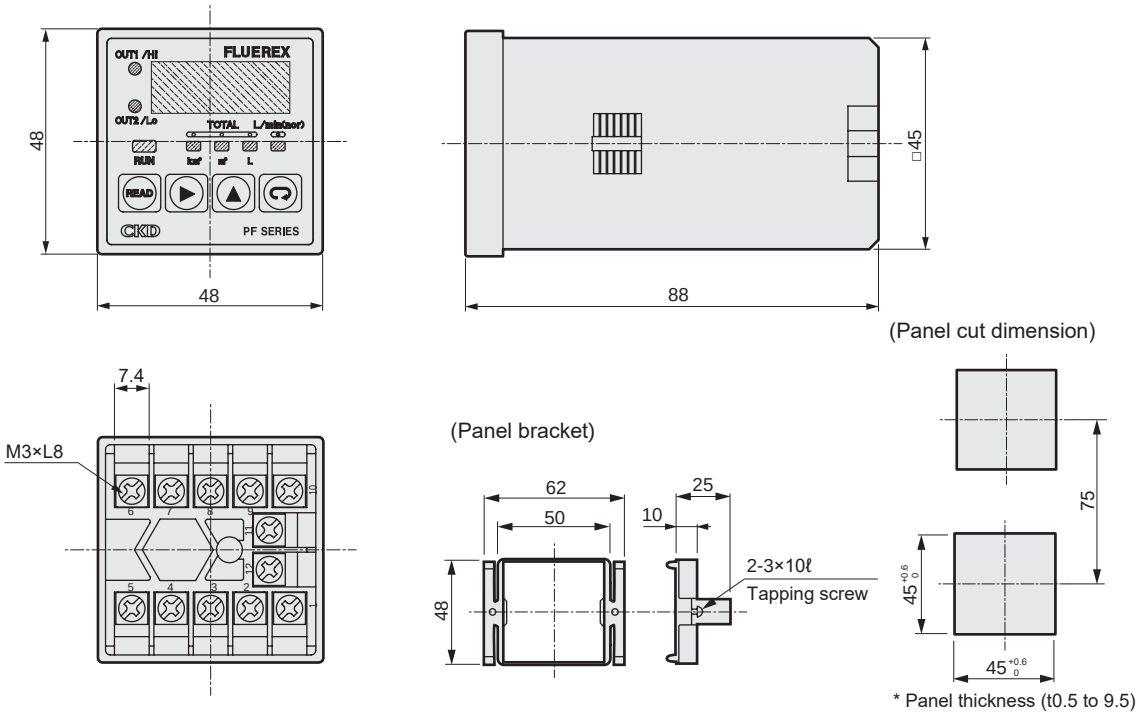

Dimensions CAD

● PFD-163

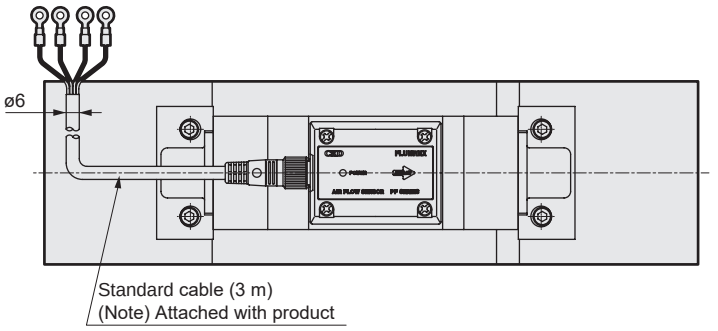

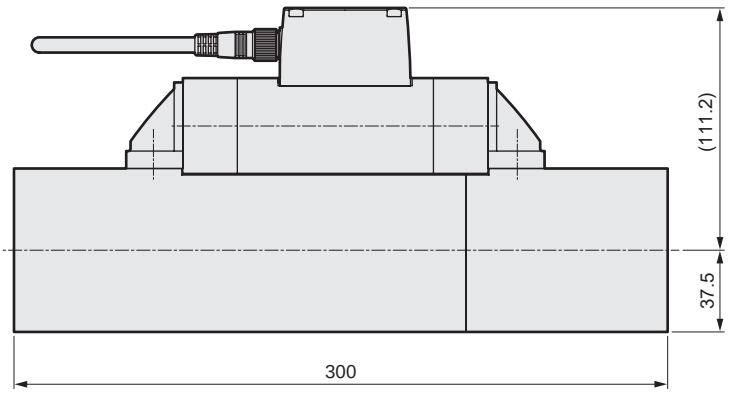

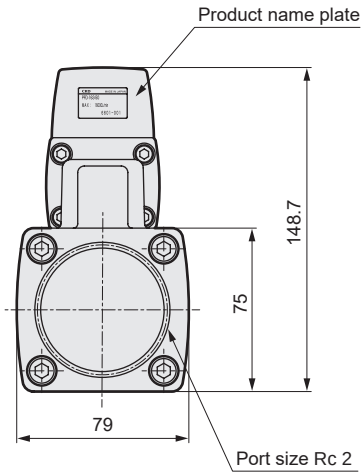

MEMO

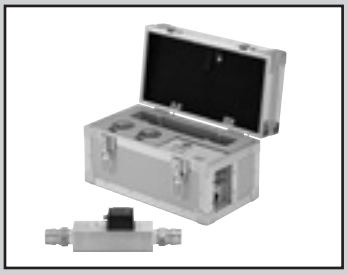

Tester kit

PFK Series

Equipment for measuring the air flow rate is provided in a kit, and this enables immediate measurements on site.

● Flow rate range: 25 to 500, 50 to 1000, 100 to 2000, 200 to 4000, 400 to 8000 L/min (normal)

RoHS

Specifications

Item		PFK-501-15NO	PFK-102-15NO	PFK-202-25NO	PFK-402-25NO	PFK-802-40NO
Specs	Flow rate range L/min(normal)	25 to 500	50 to 1000	100 to 2000	200 to 4000	400 to 8000
	Port size	Rc1/2		Rc1		Rc1 1/2
Working conditions	Applicable fluid	Compressed clean air/nitrogen gas				
	Air quality	JIS B8392-1: 2012 (ISO 8573-1: 2010) [1:1:1 - 1:6:1] (*1)				
	Max. working pressure MPa	1.0 (≈150 psi, 10 bar)				
	Min. working pressure MPa	0.1 (≈15 psi, 1 bar)				
	Proof pressure MPa	1.5 (≈220 psi, 15 bar)				
	Ambient temperature °C	0 (32°F) to 50 (122°F)				
	Ambient humidity	85% R.H. or less (no condensation)				
	Fluid temperature °C	0 (32°F) to 40 (104°F)				
Accuracy	Linearity	±3.0% F.S. (0.5 MPa (≈73 psi, 5 bar), at 20°C (68°F))				
	Pressure characteristics	±2.0% F.S. (0.5 MPa (≈73 psi, 5 bar) reference, at 0.2 (≈29 psi, 2 bar) to 0.7 MPa (≈100 psi, 7 bar))				
	Temperature characteristics	±2.0% F.S. (20°C (68°F) reference, at 10 (50°F) to 30°C (86°F))				
	Pressure loss MPa	0.015 (≈2.2 psi, 0.15 bar) or less (max. flow rate, at 0.5 MPa (≈73 psi, 5 bar))				
	Response time sec	2.5 or less				
Output	Display	Instant/integrating flow 4-digit LED display				
	Resolution L/min(normal)	1	5	5	10	20
	Min. displayed flow rate L/min(normal)	10	20	40	80	160
	Integrating flow	Max. 9 digits (switching display using change key) (*4)				
	Analog output	0 to 5 VDC				
	Switch output	1 point (NPN transistor output) (*5)				
	Pulse output (*2)	10 L (normal)/pulse				100 L (normal)/pulse
	Power supply voltage V	100 VAC (6 W or less/excluding load current of switch output)				
	Cable	Accessory (for between sensor and monitor: 3 m/power supply cable: 2.5 m)				
Mounting	Mounting orientation	Unrestricted in vertical/horizontal directions				
	Straight piping section	IN side: 10D, OUT side: 5D, these are recommended (*3)				
	Degree of protection	IP64 equivalent (only for sensor)				
	Weight kg	6.0		7.5		9.5

*1 : Note that condensation may be formed when used in a state with ambient temperature lower than fluid temperature. Be careful that detection failure may occur if transmitted oil is accumulated. Because this kit does not have clean specifications for equipment, the generation of particles occurs on the secondary side. When the ultra clean air is required, it is recommended to install a filter for precise filtration on the end side.
*2 : The pulse output is shared with the switch output. Use this output by switching the function.
*3 : Providing a straight piping section on the upstream side of the coupler (female) is recommended so that the piping conditions do not affect the performance (D is inner diameter of the pipe).
*4 : The data of integrating flow value is backed up regularly. It can also be backed up by operation. Refer to “Functions/operations” on page 1546 for details.
*5 : Only OUT2 can be used. The setting of OUT1 can be made, but there is no output terminal.

Configuration of product

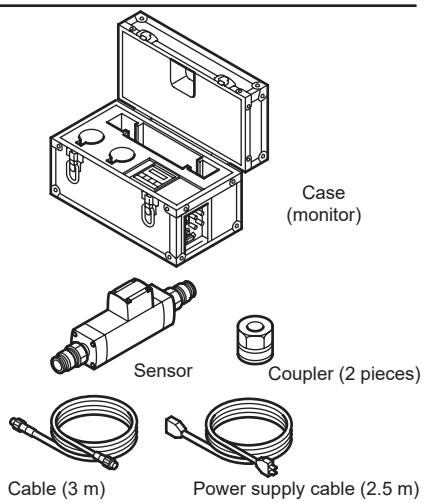

Tester kit PFK Series
Planned for end of production March 2022.

How to order

● Tester kit

PFK- 402 - 25 N 0

Ⓐ Flow rate range
Ⓑ Port size
Ⓒ Switch output
Ⓓ Analog output

Code	Description
Ⓐ Flow rate range	
501	25 to 500 L /min(normal)
102	50 to 1000 L /min(normal)
202	100 to 2000 L /min(normal)
402	200 to 4000 L /min(normal)
802	400 to 8000 L /min(normal)

Ⓑ Port size						
	Flow rate range	501	102	202	402	802
15	Coupler for 15 A	●	●			
25	Coupler for 25A			●	●	
40	Coupler for 40A					●

Ⓒ Switch output	
N	NPN transistor output *1

Ⓓ Analog output	
0	0 to 5 VDC

⚠ Precautions for model No. selection

*1: Only OUT2 can be used. The setting of OUT1 can be made, but there is no output terminal.
*2: For this product, the sensor, monitor, cable and coupler are included in the dedicated trunk case.

Product: PFK-(A)-(B) N0

[Example of model No.]

PFK-402-25N0

Ⓐ Flow rate range: 200 to 4000 L/min (normal)
Ⓑ Port size : Coupler for 25 A
Ⓒ Switch output : NPN transistor output
Ⓓ Analog output : 0 to 5 VDC

Dimensions

● PFK

Sensor section

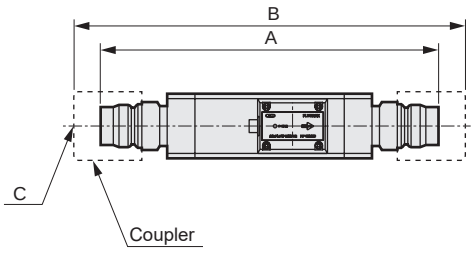

	A	B	C
Sensor for PFK-501 to 102	228	264	Rc1/2
Sensor for PFK-202	285	331	Rc1
Sensor for PFK-402	300	346	Rc1
Sensor for PFK-802	350	402	Rc1 1/2

Case

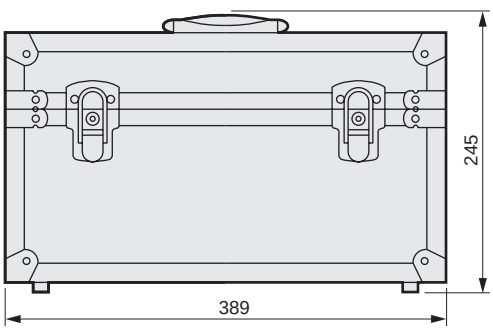

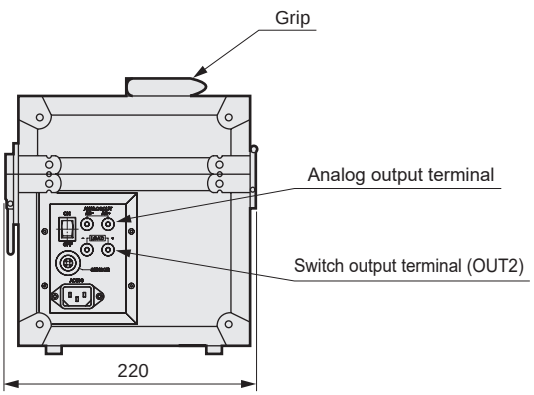

Pressure loss characteristics

● PFD-501-10

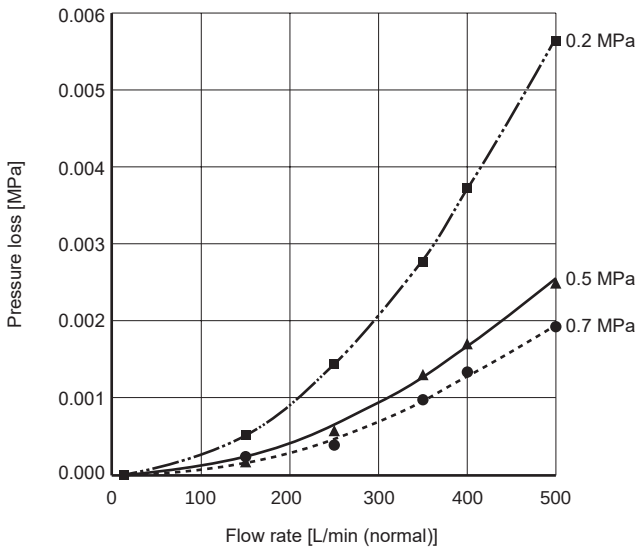

● PFD-102-15

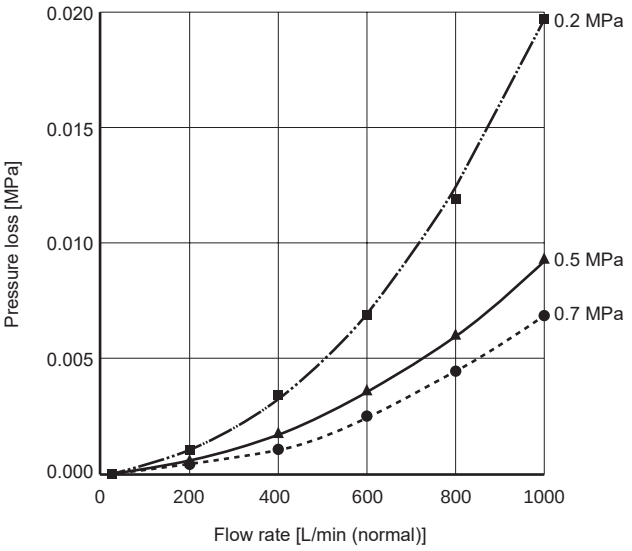

● PFD-202-20

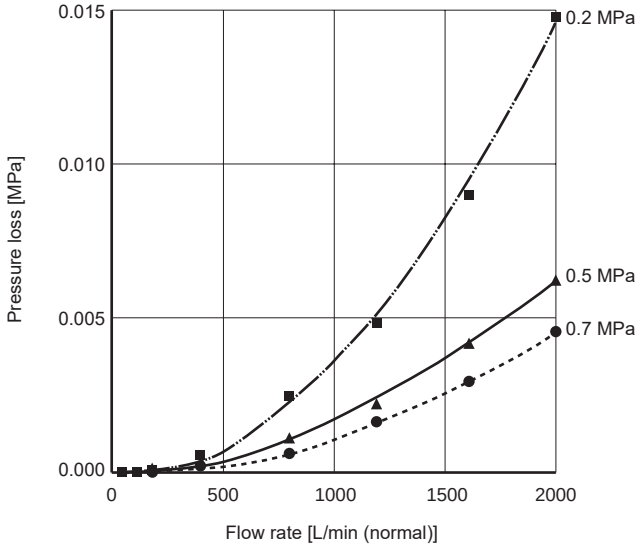

● PFD-402-25

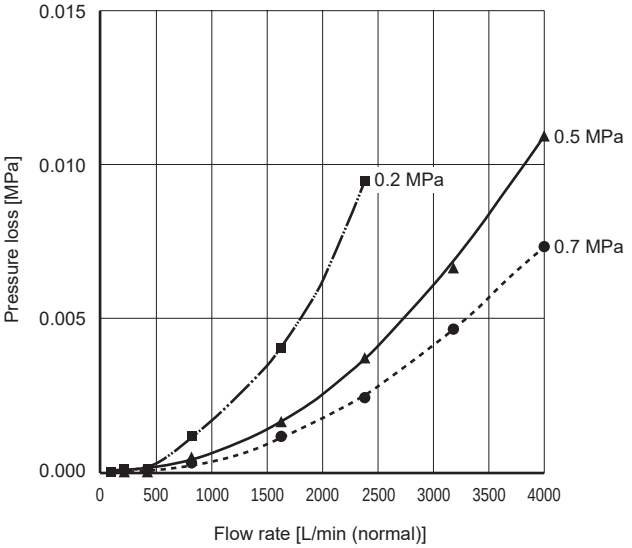

● PFD-802-40

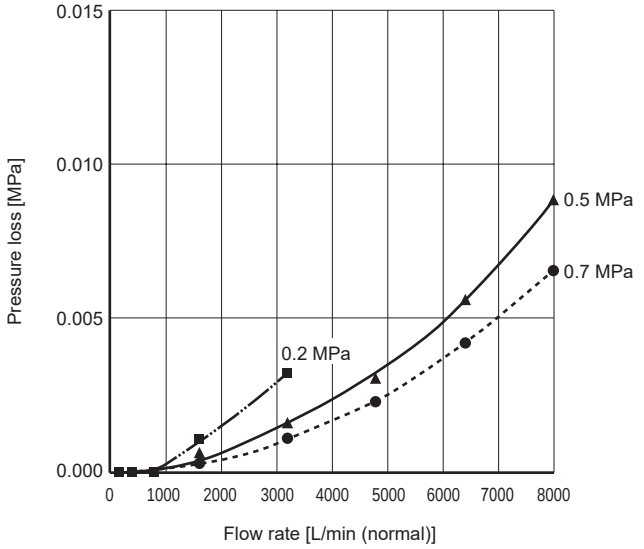

● PFD-163-50

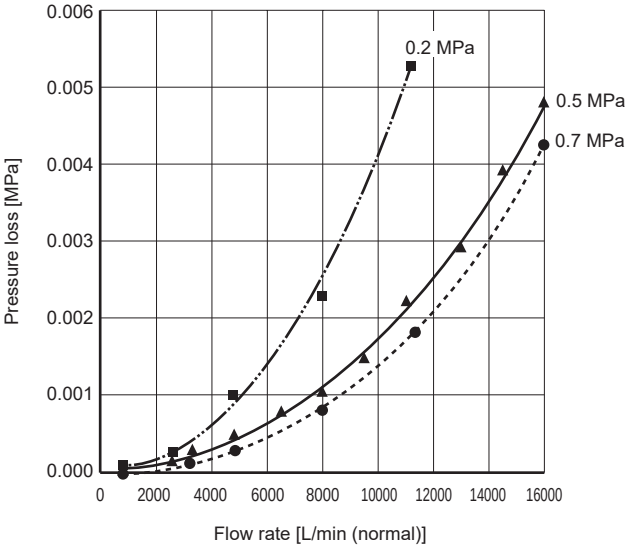

MEMO

PFD series electric wiring

1 Analog output [option code: -0 (standard), -1, -2, -3]

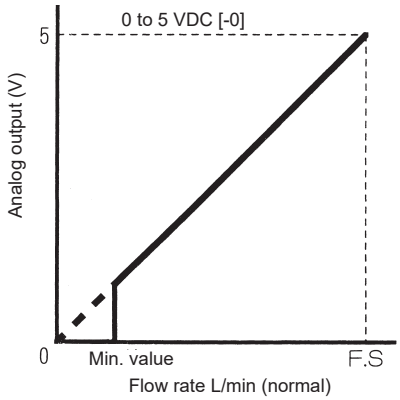

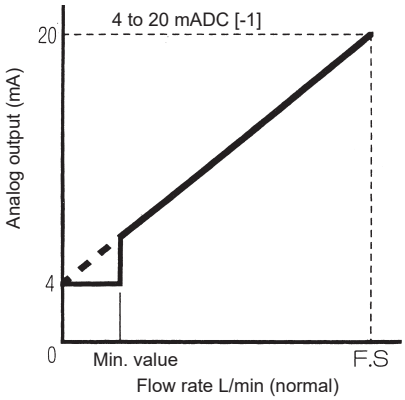

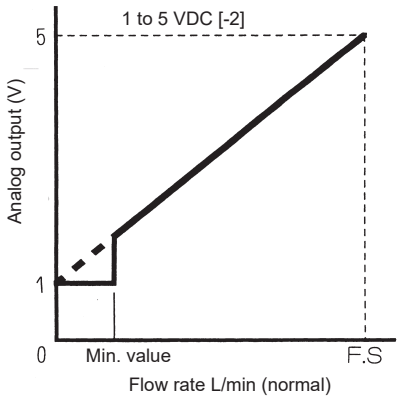

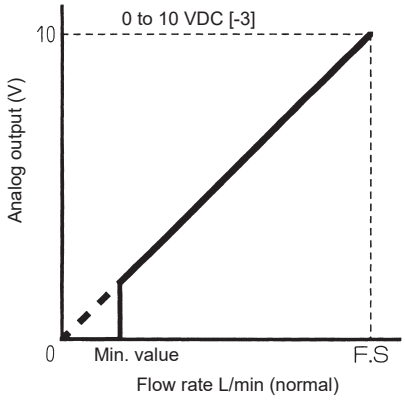

Load resistance of analog output

Analog output \ Description	Load resistance
0 to 5 VDC	50 kΩ or more
4 to 20 mADC	300 Ω or less
1 to 5 VDC	50 kΩ or more
0 to 10 VDC	50 kΩ or more

Model No.	Min. L/min (normal)	FS L/min(normal)
PFD-501-10	25	500
PFD-102-15	50	1000
PFD-202-20	100	2000
PFD-402-25	200	4000
PFD-802-40	400	8000
PFD-163-50	800	16000

- The relation between the flow rate and the analog output is as in the figure on the left. Note that the analog output is not output normally at the min. value or less.
- Never make a short circuit between the analog output terminal and another terminal. This may lead to failure.
- Make the cable short so as not to be affected by noise and keep it away from all noise sources such as power distribution wires.

2 Integrated pulse output (switching to switch output. Only OUT2 can be used)

- For the integrated pulse output, a pulse is output per the integrated value below. L (normal)

Model No.	PFD-501 PFK-501	PFD-102 PFK-102	PFD-202 PFK-202	PFD-402 PFK-402	PFD-802 PFK-802	PFD-163
Integrating flow per pulse	10				100	

[Example] When using PFD-802, the pulse wave shape is as below.

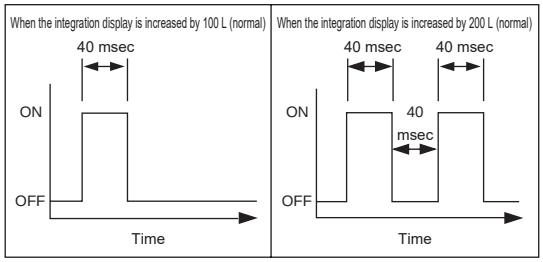

The integration display is updated at intervals of approx. 1 sec.

- Output circuit

◆ In case of NPN output

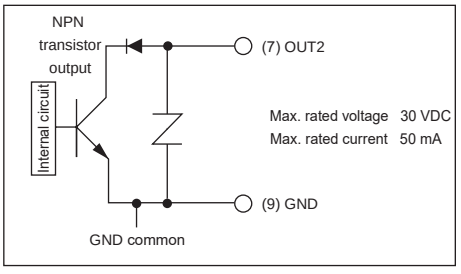

◆ In case of PNP output

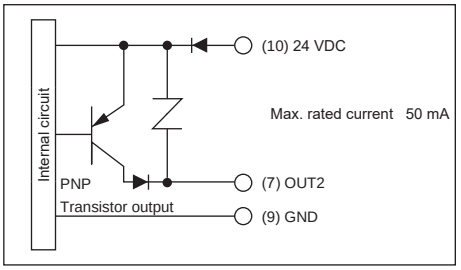

3 Wiring method for sensor and monitor

● Always read the safety precautions before wiring.

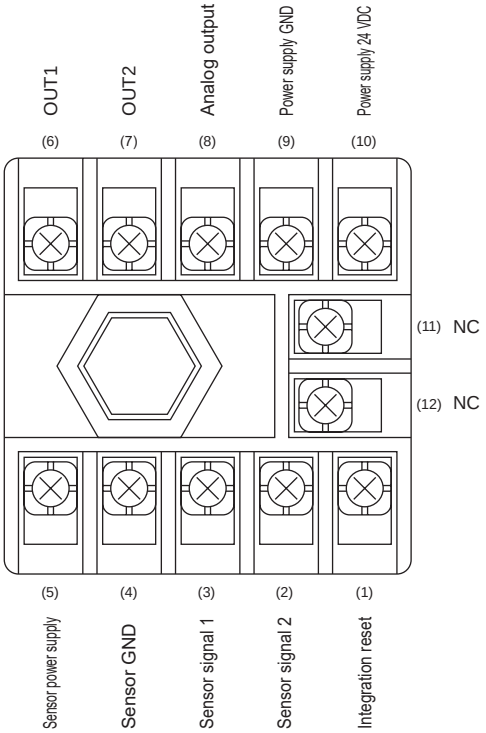

● Use the cables attached to the product.
[Specifications]
With DC 4-conductor connector
Finish diameter: ø6
Conductor wire size: 0.5 mm^2
Insulator outer diameter: ø1.72 mm

● When extending the cable, contact your CKD branch or dealer.

No.	Function	
1	Integration reset	By connecting this terminal to (9) GND terminal, the integrating flow value can be cleared.
2	Sensor signal 2	Connect to accessory cable [BLACK]
3	Sensor signal 1	Connect to accessory cable [WHITE]
4	Sensor GND	Connect to accessory cable [BLUE]
5	Sensor power supply	Connect to accessory cable [BROWN]
6	OUT1	NPN/PNP transistor output
7	OUT2	NPN/PNP transistor output
8	Analog output	Voltage/current output
9	Power supply GND	Connect to power supply 0 VDC
10	Power supply 24 VDC	Connect to power supply 24 VDC
11	NC	Connect nothing.
12	NC	Connect nothing.

● Switch output circuit

◆ In case of NPN output

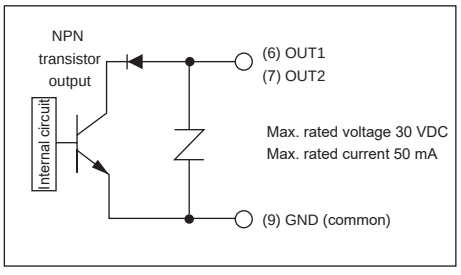

◆ In case of PNP output

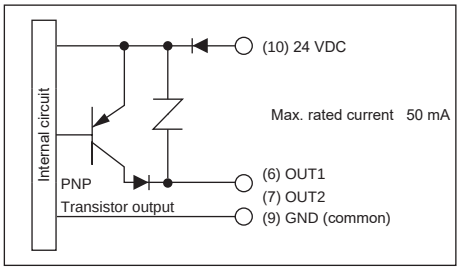

● Analog output circuit

◆ In case of voltage output

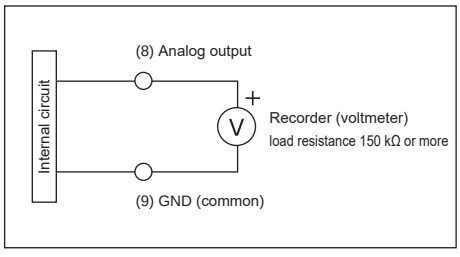

◆ In case of current output

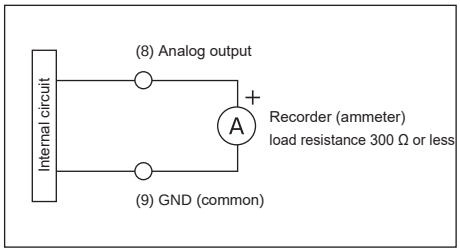

Functions and operations for monitor

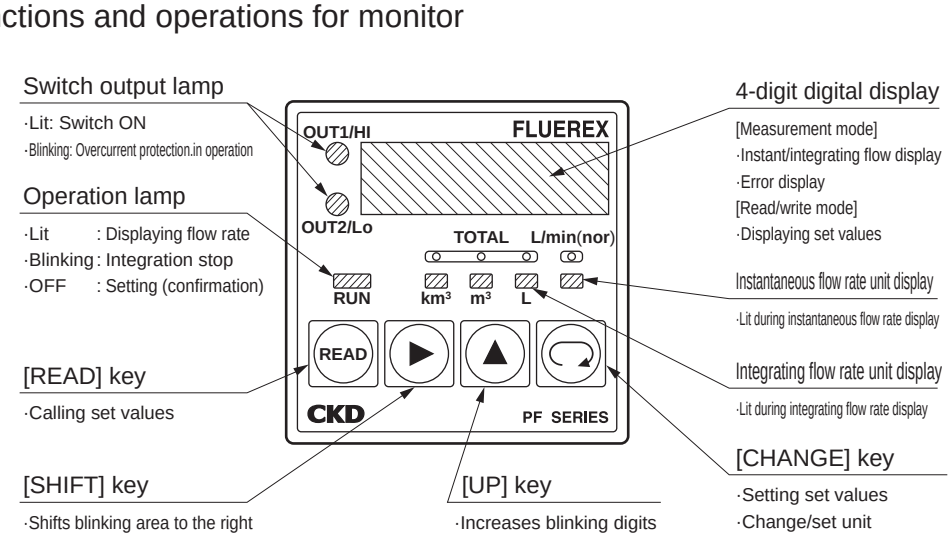

Switch parameter

Four types of setting are available according to the application.

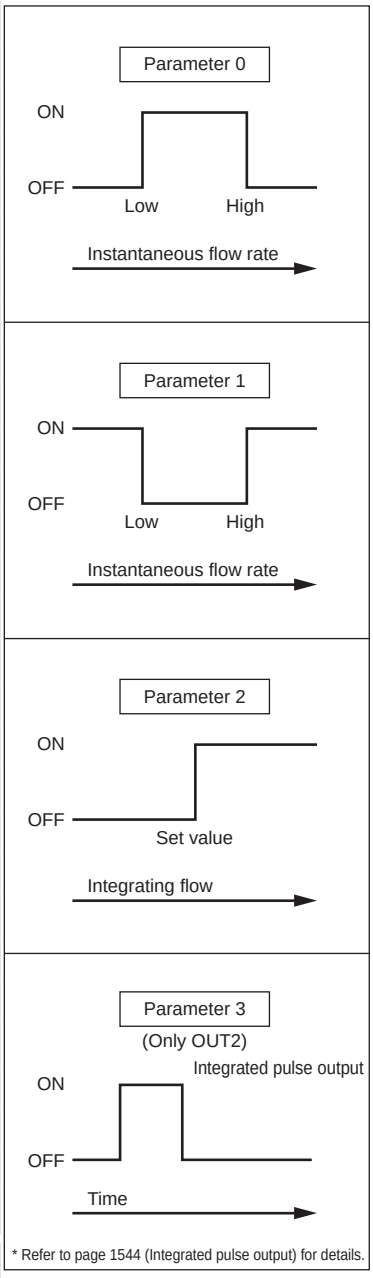

* Refer to page 1544 (Integrated pulse output) for details.

* For parameter 2, it is (integrated switch set values) instead of (L) (H) (h).
* Since there is no setting item for parameter 3, it jumps to (peak value display) in the read mode and (parameter setting) in the write mode.
* Display unit of the integrating flow rate changes by pressing the ▶ (shift key) after setting/confirming the integrating flow rate.

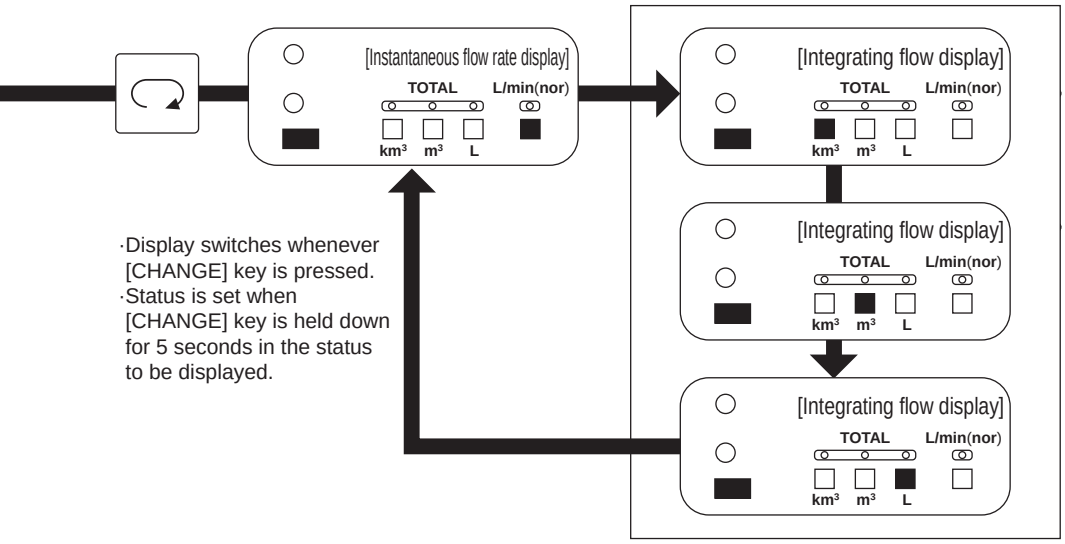

·Display switches whenever [CHANGE] key is pressed.
·Status is set when [CHANGE] key is held down for 5 seconds in the status to be displayed.

·During integrating flow display, {halt/value clear} is possible. To clear, hold down for 10 seconds in the same way as Read mode.
·If integrating flow rate display is paused, integrating flow rate value is backed up in the internal memory.

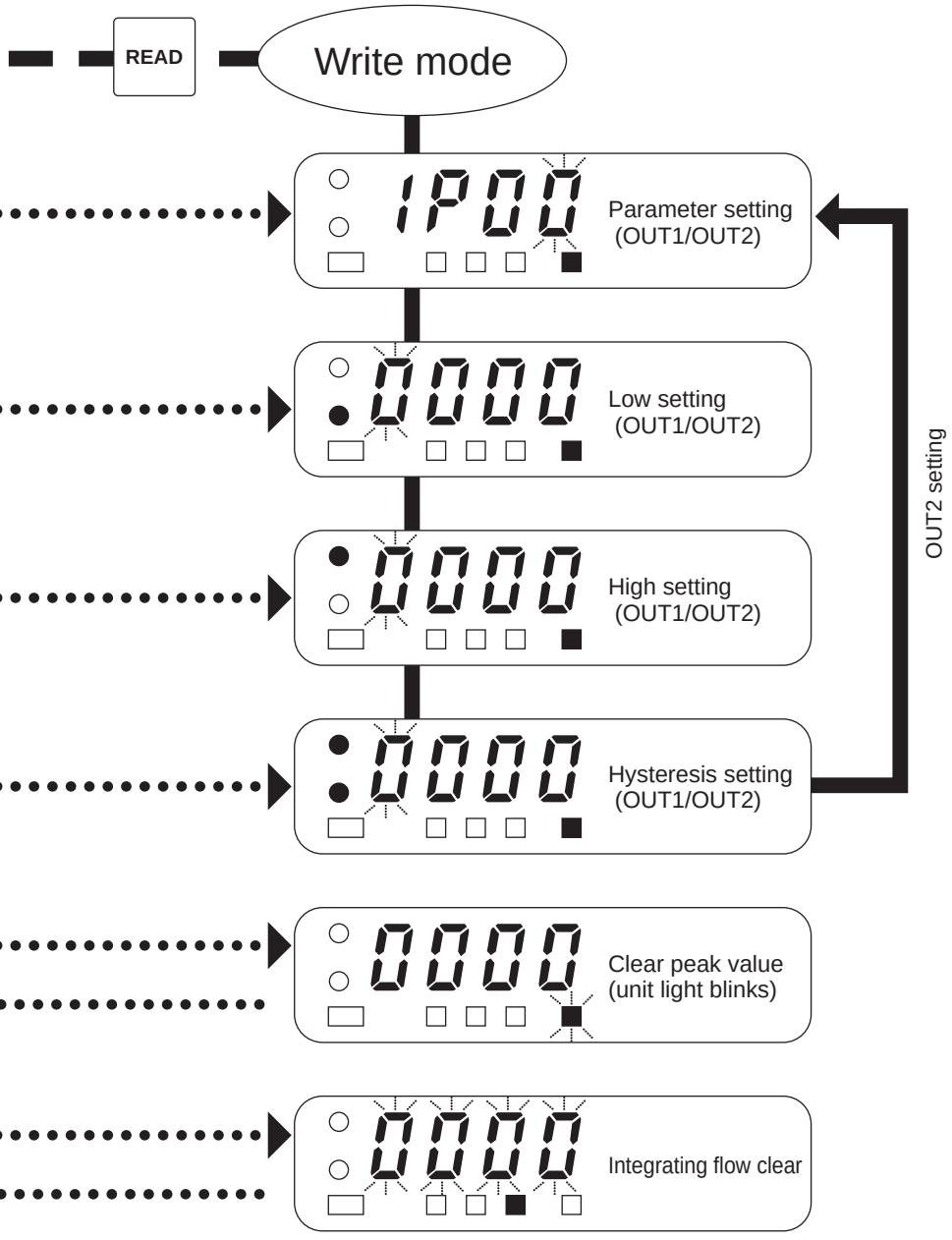

* Peak value/integrating flow rate can be cleared after holding down [SHIFT], [UP] keys together for 10 seconds.

■Hysteresis

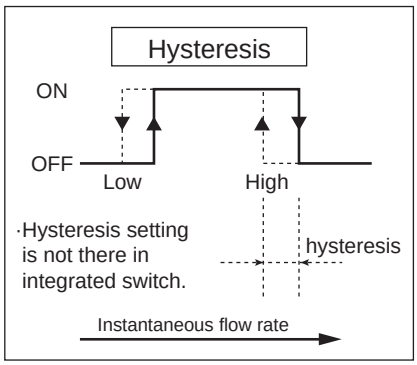

■Integrated pulse output

As for OUT2, if the parameter is set to [3], switch output function is changed to integrated pulse output function.
Moreover, note that there is no integrated pulse output function in OUT1.

■Backup of integrating flow rate value/peak value

·This product automatically backs up the integrating flow rate value/peak value to the internal memory and the backed-up data is retained even when the power is turned off.
·Timing of backup is as follows.
1) If there is a change from the previous integrating flow rate value/peak value after 5 minutes or more from the previous backup.
2) If integrating flow stop is executed.
3) If the integrated value is cleared. (Peak value backs up the value at that time and integrated value backs up the post-clearance value)
4) If the peak value is cleared. (Peak value backs up the post-clearance value and integrated value backs up the value at that time)

·Note that it does not back up in the following cases.
1) If less than 5 minutes since the last backup.
2) If there is no difference in value after 5 minutes from the last backup.

The value shown at the time of turning ON the power is the value of the last backup.

Pneumatic components (sensors)

Safety Precautions

Be sure to read this section before use.
Refer to Intro Page 63 for general precautions regarding pneumatic components and refer to "⚠ Safety precautions" for detailed precautions for individual series.

Product-specific cautions: Flow sensor for compressed air PFD series

Design/selection

1. Checking the specifications

⚠ DANGER

■ Never use with a flammable fluid.

⚠ WARNING

■ Use the product in the range of conditions specified for the product.
The product in this catalog is designed for use only in a compressed air system. Use with pressures or temperatures outside the specifications range may result in damage or operation failure.

■ This product cannot be used as a billing meter.
Do not use this product for commercial transactions as it is not compliant with the Measurement Act. Intended applications include industrial sensors.

■ Because compressed air or nitrogen gas is used as an applicable fluid, do not use fluids other than these, because accuracy cannot be guaranteed.

2. Safety design

⚠ WARNING

■ Take measures to prevent physical harm or property damage in the event of failure of this product.

⚠ CAUTION

■ Understand the characteristics of compressed air before designing a pneumatic circuit.
- Pop-out, air discharge, or leakage due to air compression and expansion may occur.
- Design the circuit so that compressed air in the system is exhausted.

■ Check for leakage current to avoid malfunction caused by the leakage current.
- When using a programmable controller, leakage current may cause malfunction.

■ Because both the sensor and monitor of this product are independent, they can be replaced with a model that has the same flow rate range.
- They cannot be replaced with a model that has a different flow rate range.
- The sensor and monitor must be used in a set. By using only either one of them, this kit does not operate.

■ Although there is no movable section in the flow rate sensor, when repeating ON/OFF of the solenoid valve, the mesh section or fixed section of the rectifier may move slightly and this may result in the generation of particles. When the generation of particles must be eliminated, be sure to install a filter on the secondary side (downstream side) of the flow rate sensor.

3. Design by application

⚠ CAUTION

■ Exerts no influence on performance as it uses compressed air and a small amount of leakage is tolerable. Contact CKD if no leakage is tolerable.

4. Working environment

⚠ DANGER

■ Never use this product in an explosive gas atmosphere. The structure is not explosion-proof, and explosions or fires could occur.

■ When using nitrogen gas as an applicable fluid, oxygen deficiency could be caused. Observe the following instructions.
(1) Use in well ventilated locations.
(2) Ventilate the work area when nitrogen gas is being used.
(3) Inspect nitrogen gas piping regularly to avoid leaks.

⚠ WARNING

■ Install the product where it will not be exposed to rain, water or direct sunlight.

■ Do not use this product in a corrosive environment. Use in such an environment could lead to damage or operation failure.

■ Consult with CKD if ozone is generated in the supplied air.

■ Avoid using this product in environments where ozone is generated.

■ Fluid temperature should be in the range of 0 to 40°C.
Even if the ambient temperature is within the specified range, do not use this product in a location where the temperature could suddenly change and cause dew to condense.

■ Do not use at a pressure exceeding the max. working pressure, as excessive pressure can cause product failure.

■The sensor section employs a dust-proof, drip-proof structure that provides reliability during maintenance and cleaning, during which it may be exposed to water splashing. However, avoid using this product in a location where it may be constantly exposed to water or intense splattering of water and/or oil.

⚠CAUTION

■Confirm before use that the product will withstand the working environment.
- This product cannot be used in environments where functional obstacles could occur. Such environments include high temperatures, chemical atmospheres, or those where chemical liquids, vibration, moisture, dripping water, coolant or gas are present. Environments where ozone is generated.

■Be sure to use within ambient temperature range of 0 to 50°C.

■Do not use this product in an environment exposed to vibration resistance of 49 m/s^2 and over or shock resistance of 294 m/s^2 and over.

■Working conditions for CE compliance
This product is CE-marked, indicating conformity with the EMC Directives. The standard for the immunity for industrial environments applied to this product is EN61000-6-2; the following requirements must be satisfied in order to conform to this standard:
Conditions
- The power cable connected to the terminal block must be less than 3 m long.
- This product is not equipped with surge immunity.
  Implement surge protection measures on the system side.

5 . Securing of space

⚠WARNING

■Secure sufficient space around the pneumatic components for installation, removal, wiring, and piping work.

Mounting, installation and adjustment

1 . Mounting

⚠DANGER

■Use power supply voltage and output within the specified voltage.
If voltage exceeding the specified voltage is applied, the sensor could malfunction or be damaged, or electrical shock or fire could occur. Do not use any load that exceeds the rated output. Otherwise, output damage or fire may result.

⚠WARNING

■Check the line color and terminal number when connecting wires.
Incorrect wiring could result in sensor damage and malfunctions, so check wire color and terminal number against the instruction manual before wiring. Install a noise filter if required.

■Ensure that wires are properly insulated.
Check that wires do not come into contact with other circuits, that no ground faults occur, and that the insulator between terminals is not defective. Otherwise, overcurrent may flow into the sensor, causing damage.

■Keep the product away from high voltage lines, high voltage components and power components such as motors.

■Check that there are no cutting chips and wire dust on the terminal block of the monitor and the connector of the sensor before wiring.

⚠CAUTION

■Do not remove the pneumatic components and packaging and the piping port dust-proof cap until just before starting to pipe.
- If the piping port cap is removed from the piping port before piping work is started, foreign matter could enter the pneumatic component from the piping port and result in faults or faulty operation.

■Do not install the pneumatic components by supporting it with pipes.

2 . Confirmation before operation

⚠CAUTION

■After connecting the pipes, check pipe connections for air leaks before supplying compressed air.
- Apply a leakage detection agent on pipe connections with a brush and check for air leaks. Make sure that the leak detection agent does not adhere to the resin parts. Otherwise resin parts could be damaged, which is dangerous.

■Keep the cable away from all noise sources, including power distribution wires. Noise can cause malfunctions.

■Do not short-circuit the output transistor.
When a load is short-circuited, overcurrent protection circuit is triggered to prevent damage to the output transistor; however, if this state persists, the output transistor could be damaged.

■Do not use a load that can produce surge voltage.
When directly running the load that generates a surge such as relay and solenoid valve, use a surge absorber built-in type. If there is a surge source on the same power supply line, similarly implement surge protection.

■This product has no protection against lightning surge.
This product is CE marking compliant but has no protection against lightning surge. For the protection against lightning surge, take countermeasures on the equipment side.

■Make sure that the lead wire is free of repeated bends and tension. This may lead to disconnection.

■For the wiring to the sensor and monitor, use the accessory cable (3 m).

Mounting, installation and adjustment

3. Piping

⚠CAUTION

■When connecting pipes, wrap sealing tape in the opposite direction from the threading, from the inside position to within 2 mm from the pipe end.

● If sealing tape protrudes from the pipe threads, it could be cut when screwing the bolts in. This could cause the tape to enter the product, causing failures.

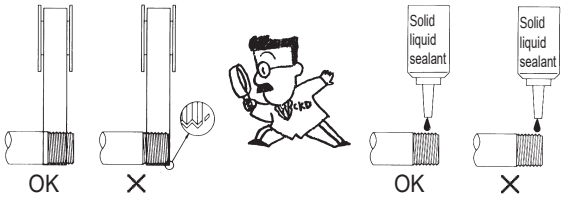

● When using a liquid sealant, make sure it does not adhere to resin parts. Otherwise resin parts could be damaged, which is dangerous.

■Check that the piping connected to the pneumatic components is not dislocated due to vibration, looseness, or tension.

● Piping dislocation is dangerous.

■Observe the following precautions when using nylon tubes or urethane tubes for piping material.

● Use flame-resistant tubes or metal steel pipes in an environment where spattering may occur.

● When using the standard push-in fitting on the spiral tube, fix the base of the tube with a hose clamp. Rotation may occur, causing a reduction in holding force.

■Connect piping so that connections are not dislocated by equipment movement, vibration, or tension.

■Always flush just before piping pneumatic components.

● Any foreign matter that has entered the pipes during piping must not enter the pneumatic components.

■Use appropriate torque to tighten the pipes when connecting them.

● The purpose is to prevent air leakage and damage to bolts.

● First tighten the bolts by hand to ensure that the threads are not damaged, then use a tool.

[Recommended values]

Port thread	Tightening torque N·m
Rc3/8	22 to 24
Rc1/2	28 to 30
Rc3/4	31 to 33
Rc1	36 to 38
Rc1 1/2	48 to 50
Rc2	54 to 56

■When adjusting the flow rate using a metering valve (glove valve, ball valve, etc.), install the metering valve on the secondary side (downstream side) of the sensor. Generated drift (turbulence in the flow) could cause errors.

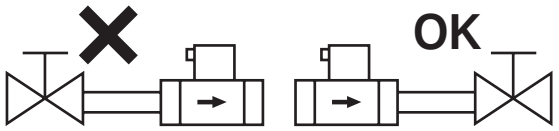

■Do not install the regulator immediately before the sensor. Generated drift may cause errors.

● When installing the regulator on the primary side, provide a straight piping section of 10D and over.
* Where "D" indicates the inner diameter of the piping material.

● Select a regulator that has sufficient margin of flow characteristics for the max. flow rate of the sensor.

■Align the fluid flow direction to the direction indicated on the sensor when connecting the pipes. When connecting it in reverse, the larger value is displayed.

■When using an elbow or bush in the piping, it is recommended to provide straight piping sections of 10D and over on the primary side and 5D and over on the secondary side.

● For PFD-163 Series, be sure to provide straight piping sections.

● Bore size change by bush should be limited to one size.

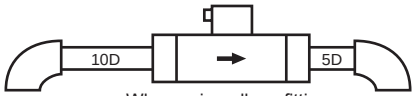

When using elbow fitting

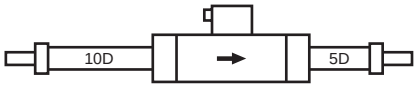

When using bush fitting

■Make sure that no force is applied to the resin parts when piping.

4. Pneumatic source

⚠CAUTION

■Install a pneumatic filter just before the pneumatic component in the circuit.

■When supplying compressed air after connecting pipes, do not suddenly apply high pressure.

● The pipe connection could dislocate, causing the pipe tube to fly out, leading to accidents.

■Air quality
- Use CKD clean air system components appropriate for your application.
- Use compressed air that does not contain oil oxides, tar, carbon, etc., from the air compressor.
- Use compressed air that does not contain solid foreign matter.

- Install a filter, air dryer, and oil mist filter on the primary side (upstream side) of the sensor. The sensor's rectifier (mesh) rectifies the flow in the pipe. It does not filter out foreign matter, so provide a filter.

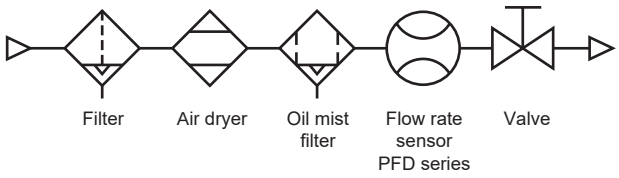

·When the ultra clean air is required

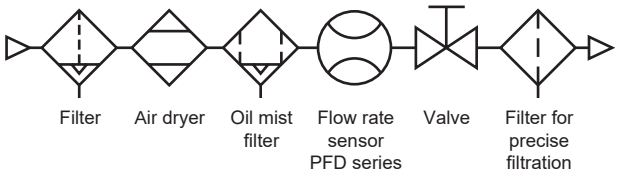

Use/maintenance

1. When using the product

⚠WARNING

■When suddenly opening the valve that connects to the sensor, fluid with a flow rate dozens of times greater than the rated flow rate may flow, and this can cause damage to the platinum thin film sensor or rectifier and flow out to the secondary side. When opening the valve that connects to the sensor, open it slowly so that the value in the monitor display may not exceed the rated flow rate.

⚠CAUTION

■If a problem occurs during operation, immediately turn the power OFF, stop use, and contact your dealer.

■After the power supply is turned ON, internal settings such as hardware check are performed for 10 seconds. During this time, the display/output cannot operate normally. Particularly, if a switch output is used in the control of an interlock circuit, an abnormal stop may occur. Mask the output during this period.

■When changing the output set value, turn OFF the equipment first in order to prevent unexpected operation in the control system equipment.

■If this product is used in an interlock circuit, provide multiple interlock circuits as a precaution against failure, and also perform regular inspections to confirm normal operation.

■Even when the instantaneous flow rate display is 0, if there is a minimal flow rate signal (including error), the integrating flow (integration count) may be displayed. When it becomes a problem in that the integrating flow is measured in a state that the flow rate display is 0, use the start/stop function in the integrating flow measurement if required.

2. Maintenance and inspection

⚠CAUTION

■Before conducting maintenance, turn the power OFF, stop the supply of compressed air and make sure that there is no residual pressure.
- Observe the conditions to ensure safety.

■Regularly inspect the product at least once a year to check that it operates correctly.

■Do not disassemble or modify, as this may cause malfunction.

Karman vortex flow rate sensor for water

WFK2

■ **Sensor/Controller Component/Flow rate sensor**



CONTENTS

Product introduction	1554
● WFK2	1556
Wiring method	1560
Display screen details	1561
⚠Safety precautions	1566

Diversified

Compatible with flow rates of 0.4 to 250 L/min

Compatible with a wide range of flow rates.

Easy flow rate adjustment (option)

Can be adjusted with a manual valve.

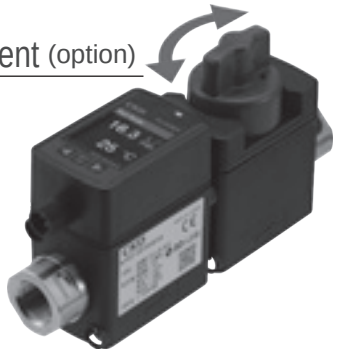

All models equipped as standard with water temperature measuring function

Saves space and wiring time with no need for a separately installed water temperature sensor.

Handles water up to 95°C


Molding machine cooling


Heated water for mold temperature controlling

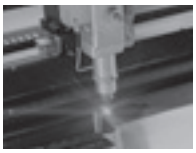
Laser oscillator cooling

Various output functions available

OUT1

Analog output
- Instantaneous flow rate
- Temperature

NPN/PNP switchable output
- Instantaneous flow rate 1/2
- Temperature 1/2
- Integrating flow

Pulse output
- Integrating flow

External input
- Integrating flow reset
- Peak hold reset

OUT2

Analog output
- Instantaneous flow rate
- Temperature

NPN/PNP switchable output
- Instantaneous flow rate 1/2
- Temperature 1/2
- Integrating flow

Pulse output
- Integrating flow

IO-Link

Introducing the IO-Link model

IO-Link

IO-Link is a digital communication standard for sensors/actuators at factory sites. (IEC 61131-9)
Unlike analog communication, it enables the transmission of parameters and event data.

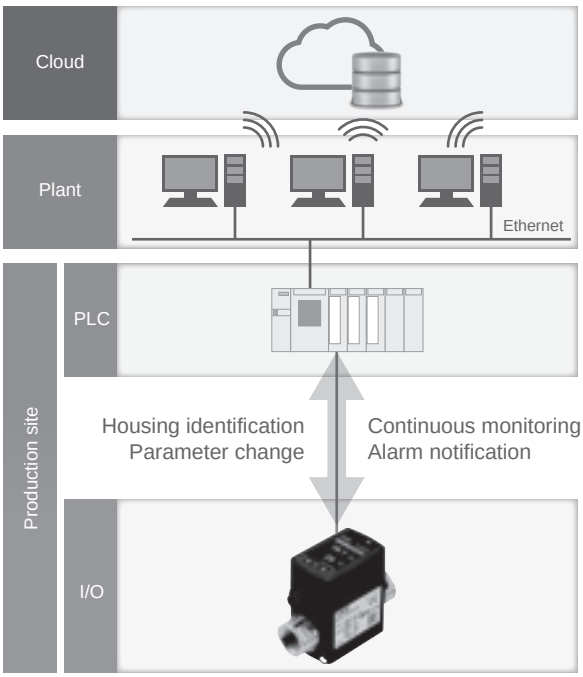

Features of IO-Link



Constant monitoring via digital data is possible.



Parameters can be set and changed via the network, enabling remote operation of the device.



Model Nos. and serial Nos. can be checked via the network.



Settings can be copied from the master (scanner) side, making troublesome parameter resetting during maintenance unnecessary.



Device failure and disconnection can be confirmed.



The network can also be changed to Ethernet connection, making the device a part of IoT.

User-friendly

Display screen rotation

The liquid crystal display can be rotated 90° at a time without moving the body. There is no interference even when installing in parallel.



Easy to read 2-screen color liquid crystal display

Set values, temperature, etc., can be displayed simultaneously.



Examples of applications

Semiconductor Semiconductor manufacturing equipment

Cooling and temperature control of semiconductor manufacturing equipment.
Etching, grinder, dicer, CVD.

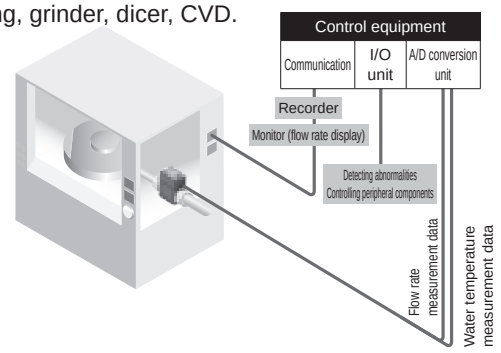

Hardening Induction hardening device

Quantitative management of cooling water.

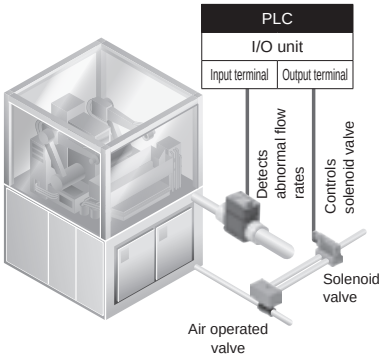

Karman vortex flow rate sensor for water FLUEREX

WFK2 SERIES

(Received the 2018 Good Design Award)

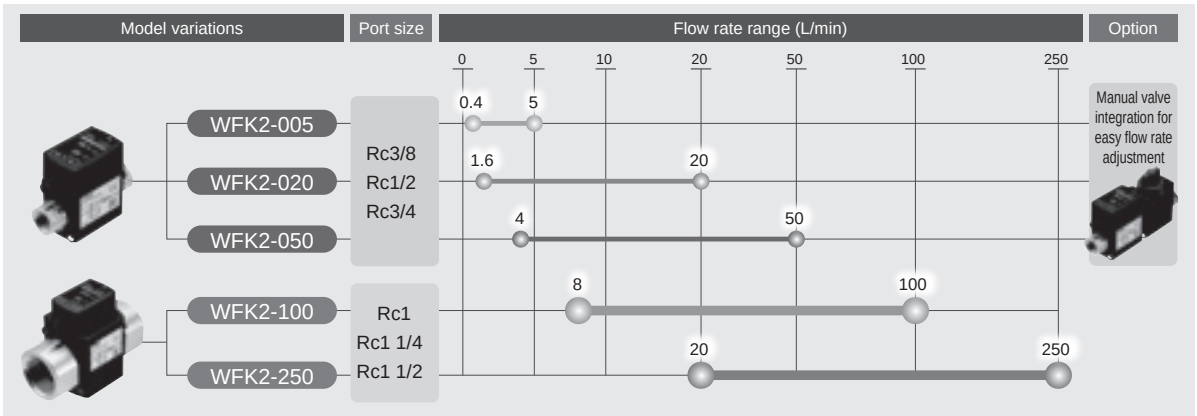

ATEX Directive compliant. Refer to "Options (ATEX compatible)" on page 1570 for specifications.

Contact CKD for support for Food Manufacturing Processes FP Series.

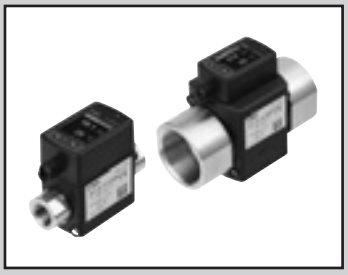

FLUEREX (Karman vortex flow rate sensor for water)

WFK2 Series

● Flow rate range: 0.4 to 5, 1.6 to 20, 4 to 50, 8 to 100, 20 to 250 L/min

CE RoHS

Specifications

Item			WFK2-005	WFK2-020	WFK2-050	WFK2-100	WFK2-250
Connection	Port size	Rc, G, NPT	3/8, 1/2, 3/4			1, 1 1/4, 1 1/2	
	Port material		Stainless steel: SUS304				
Working conditions	Applicable fluid		Pure water, industrial water				
	Max. working pressure	MPa	1.0				
	Proof pressure	MPa	1.5				
	Manual valve internal leakage	mL/min	0			No manual valve settings	
	Manual valve allowable back pressure	MPa	0.3			No manual valve settings	
	Ambient temperature	°C	0 to 50 (85% RH or less, no condensation)				
	Fluid temperature	°C	1 to 95				
Flow rate	Flow rate range	L/min	0.4 to 5	1.6 to 20	4 to 50	8 to 100	20 to 250
	Repeatability (*1)		Analog accuracy: ±2.5%F.S. Display accuracy: ±2.5%F.S. ±1 digit (min. display unit)				
	Temperature characteristics (*1)		±5%F.S. (base temperature 25 °C, 10 to 50 °C)				
	Low flow cut		5% of F.S.				
	Accumulated flow range (*2)		99,999 L or 99999m³ (Unit selectable) Reset when power supply is turned OFF.				
	Integrated pulse rate (*2)	L/pulse	0.1, 0.5, 1	0.1, 0.5, 1, 10	0.5, 1, 10, 50	1, 10, 50, 100	10, 50, 100
	Pressure loss	MPa	0.07 (at F.S.)	0.05 (at F.S.)	0.05 (at F.S.)	0.05 (at F.S.)	0.03 (at F.S.)
	Response time (*3)	sec	0.25, 0.5, 1, 5, 10 (default 1)				
Temperature	Measurement temperature	°C	0 to 100				
	Accuracy	°C	Less than 50: analog accuracy ±2, display accuracy ±2 ±1 digit (min. display unit 1)				
			50 to 100: analog accuracy ±3, display accuracy ±3 ±1 digit (min. display unit 1)				
Output	Display		Two-screen LCD display, instantaneous flow rate: 3 digits, water temperature: 2 digits, integrating flow: 5 digits, with screen rotation				
	Analog output (*4)		Standard: 0 to 5 VDC/1 to 5 VDC, option: 4 to 20 mA DC, 0 to 10 VDC/1 to 10 VDC				
	Switch output		NPN or PNP transistor open collector output (can be switched from settings)				
	Max. load current		50mA				
	Max. applied voltage		30 VDC				
	Internal voltage drop		2.0 V or less				
Power supply voltage			Analog output standard: 12 to 24 VDC ±10%, analog output option: 24 VDC ±10%				
Current consumption (*5)			50 mA or less				
Mounting	Mounting orientation		Unrestricted in vertical/horizontal direction				
	Straight piping section		No			IN side: 10 D, OUT side: 5 D	
	Degree of protection		IP 65 or equiv.				
	Weight	g	3/8 (Rc, G, NPT): approx. 320 1/2 (Rc, G, NPT): approx. 320 3/4 (Rc, G, NPT): approx. 400			1 (Rc, G, NPT): approx. 870 1 1/4 (Rc, G, NPT): approx. 1,010 1 1/2 (Rc, G, NPT): approx. 1,100	

*1: Accuracy is the average value over 10 sec (for conditions not containing air bubbles). F.S. stands for full scale flow rate.
*2: The integrating flow is a calculated (reference) value. It is reset when the power is turned OFF. Errors may occur between the integrating flow display and integrated pulse output.
*3: The time to attain 70% of the original output after the normal flow rate (used) drops instantly to 0.
*4: Check the allowable load on the wiring method page.
*5: Current for when 24 VDC is connected, and no load is applied. Please note that the current consumption changes depending on the load connection status.

Switch/analog output Switch/analog output	0 to 5 VDC 0 to 10 VDC	Switch/analog output Switch/analog output Switch/analog output	1 to 5 VDC 1 to 10 VDC 4 to 20 mADC

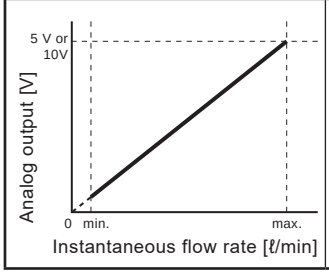

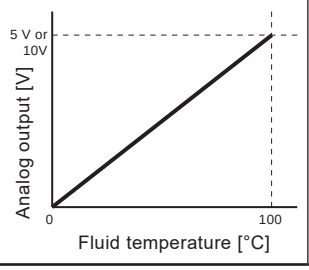

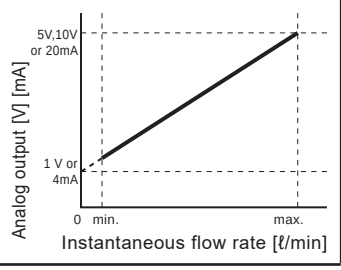

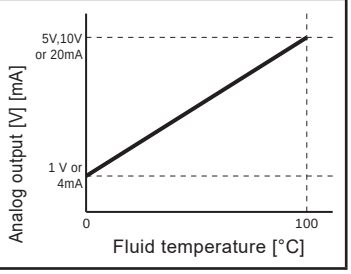

Note: Output value without adjustment of original range analog output or span.

How to order

WFK2 - 005 AA A A N - A C -

- Ⓐ Flow rate range
- Ⓑ Port size
- Ⓒ IO-Link analog output
- Ⓓ Unit indicated
- Ⓔ Manual valve
- Ⓕ Option (attached cable)
- Ⓖ Bracket (Bracket included)
- Ⓗ Option (ATEX Compliant)

Code	Description
Ⓐ Flow rate range	
005	0.4 to 5 ℓ/min
020	1.6 to 20 ℓ/min
050	4.0 to 50 ℓ/min
100	8.0 to 100 ℓ/min
250	20 to 250 ℓ/min

Ⓑ Port size

Ⓐ Flow rate range: 005, 020, 050

AA	Rc 3/8	**AB**	G 3/8	**AC**	NPT 3/8
BA	Rc 1/2	**BB**	G 1/2	**BC**	NPT 1/2
CA	Rc 3/4	**CB**	G 3/4	**CC**	NPT 3/4

Ⓐ Flow rate range: 100, 250

DA	Rc 1	**DB**	G 1	**DC**	NPT 1
EA	Rc 1 1/4	**EB**	G 1 1/4	**EC**	NPT 1 1/4
FA	Rc 1 1/2	**FB**	G 1 1/2	**FC**	NPT 1 1/2

Ⓒ IO-Link analog output
"D," "E" and "F" have analog output specifications as with IO-Link not in use.

A	Switch/analog output 0 to 5 VDC/1 to 5 VDC
B	Switch/analog output 4 to 20 mA DC
C	Switch/analog output 0 to 10 VDC/1 to 10 VDC
D	IO-Link compatible 0 to 5 VDC/1 to 5 VDC
E	IO-Link compatible 4 to 20 mA DC
F	IO-Link compatible 0 to 10 VDC/1 to 10 VDC

Ⓓ Unit indicated

A	L/min, L, m3, °C
B	L/min, US gal/min, L, m3, US gal, °C, °F *1

Ⓔ Manual valve

N	Sensor only
A	With manual valve (cock type) *2, *3

Ⓕ Option (attached cable)

Blank	No
A	Standard cable (M12/4-conductor/ 3 m) attached *4
B	Double ended connector cable (M12/4-conductor/ 3 m) attached *4

Ⓖ Option (attached bracket)

Blank	No
C	Bracket included *3

Ⓗ Option (ATEX Compliant)

Blank	No
EX	ATEX Compliant *5

Precautions for model No. selection

*1: The unit display "B" is for overseas use and cannot be used in Japan.
*2: Option A (with manual valve) has a flow rate range of 005, 020, or 050 only.
*3: When selecting Option A (with manual valve) and included bracket (C), two sets of brackets are attached.
*4: Cable attachment cannot be selected for the option (ATEX compatible).
*5: Refer to "Options (ATEX compatible)" on page 1570 for specifications.

[Example of model No.]

WFK2-005AAAAN-AC

- Ⓐ Flow rate range : 0.4 to 5 L/min
- Ⓑ Port size : Rc3/8
- Ⓒ IO-Link/analog output: Switch/analog output 0 to 5 VDC/1 to 5 VDC
- Ⓓ Display unit : L/min, L, m3, °C
- Ⓔ Manual valve : Sensor only
- Ⓕ Option included : Standard cable
- Ⓖ Option : Bracket included

Pressure loss

● WFK2-005

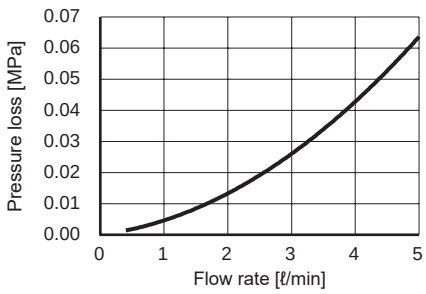

● WFK2-020

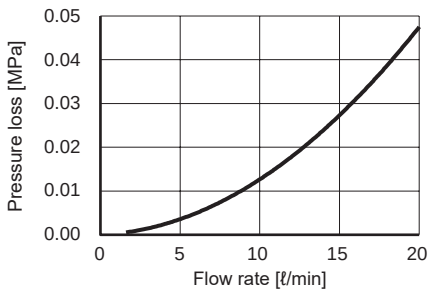

● WFK2-050

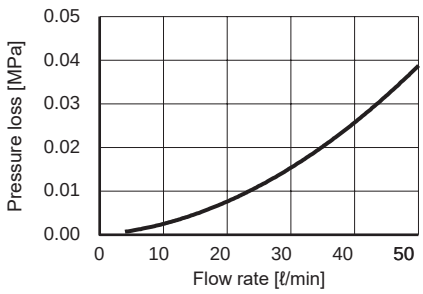

● WFK2-100

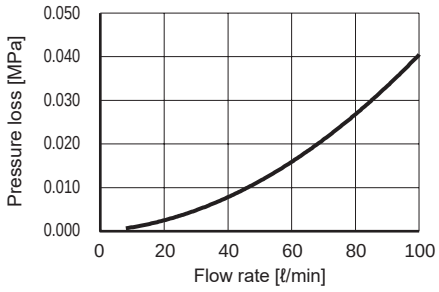

● WFK2-250

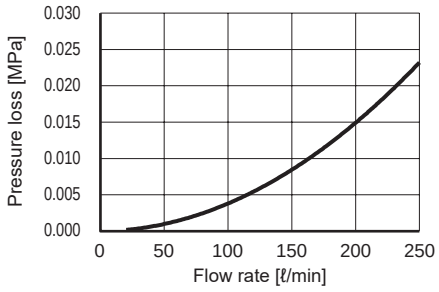

Internal structure and list

● WFK2-005, 020, 050

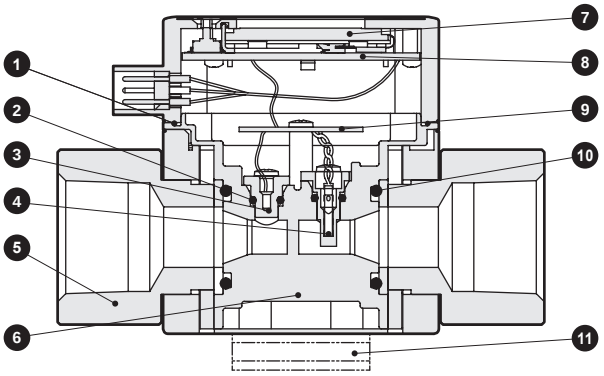

● WFK2-100, 250

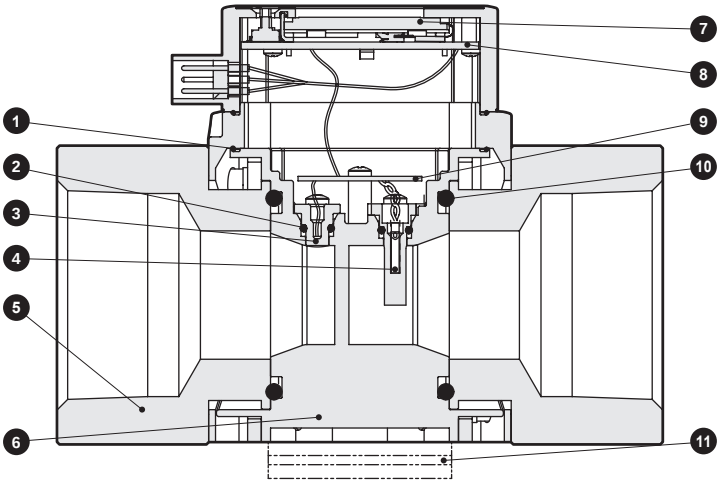

Cannot be disassembled

No.	Part name	Material		Quantity
1	Packing	FKM	Fluoro rubber	1 or 2
2	O-ring	FKM	Fluoro rubber	2
3	Temperature sensor	SUS316L	Thermistor	1
4	Karman vortex detection sensor	PPS resin	Piezoelectric element	1
5	Attachment	SUS304 or SCS13		2
6	Sensor body	PPS resin		1

No.	Part name	Material		Quantity
7	Liquid crystal			1
8	CPU board			1
9	Sensor board			1
10	O-ring	FKM	Fluoro rubber	2
11	Bracket (option)	SUS304 or SPCC		(1)

* Wetted parts are ②, ③, ④, ⑤, ⑥ and ⑩.

● WFK2-005, 020, 050****A

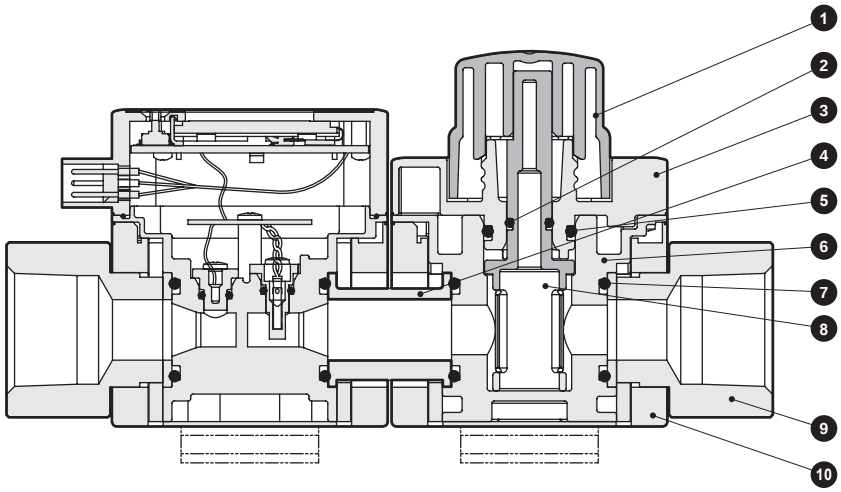

Cannot be disassembled

No.	Part name	Material		Quantity
1	Handle	POM resin		1
2	O-ring	FKM	Fluoro rubber	1
3	Stuffing	PPS resin		1
4	Spacer	SUS304 or SCS13		1
5	O-ring	FKM	Fluoro rubber	1
6	Cock body	PPS resin		1

No.	Part name	Material		Quantity
7	O-ring	FKM	Fluoro rubber	2
8	Cock	PPS resin		1
		FKM	Fluoro rubber	
9	Attachment	SUS304 or SCS13		2
10	External case	PBT resin		1

* Wetted parts are ②, ③, ④, ⑤, ⑥, ⑦, ⑧ and ⑨.

dimensions

● WFK2-005,020,050

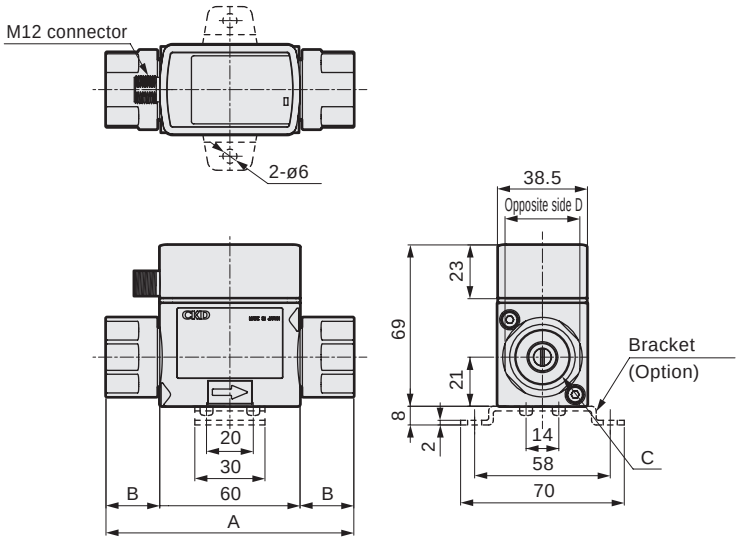

・ With manual valve (cock type)

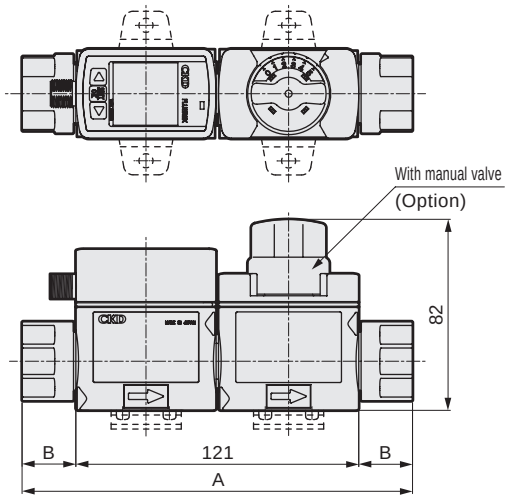

● WFK2-100,250

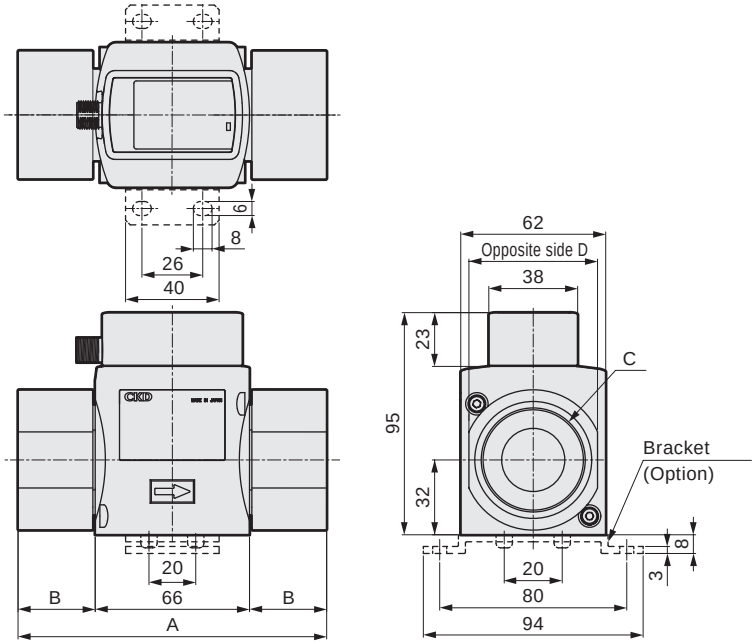

Model No.	A	B	C	Opposite side D
WFK2-[*1]A[*3]**N	90	15	Rc3/8	24
WFK2-[*1]B[*3]**N	90	15	Rc1/2	27
WFK2-[*1]C[*3]**N	106	23	Rc3/4	32
WFK2-[*2]D[*3]**N	106	20	Rc1	46
WFK2-[*2]E[*3]**N	125	29.5	Rc1 1/4	50
WFK2-[*2]F[*3]**N	132	33	Rc1 1/2	55
WFK2-[*1]A[*3]**A	151	15	Rc3/8	24
WFK2-[*1]B[*3]**A	151	15	Rc1/2	27
WFK2-[*1]C[*3]**A	167	23	Rc3/4	32

[*1]: Select from 005, 020, and 050
[*2]: Select from 100 and 250
[*3]: Select from A, G, and N (G thread and NPT thread also have the same Dimensions)

Optional dimensions

●Cable option
Common for WFK2
・Standard cable
Discrete option model No.:**WF-FL-280741**

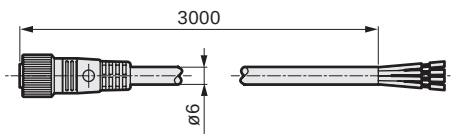

Finished outer diameter 6 mm, core wire 0.5mm², insulator O.D. 1.9mm

・ Double ended connector cable
Discrete option model No.:**WF-FL-662453**

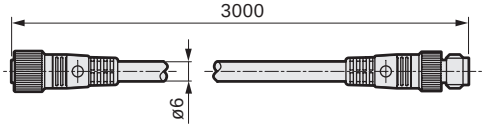

●Bracket option
WFK2-005,020,050
Discrete option model No.:**WF-FL-315544**

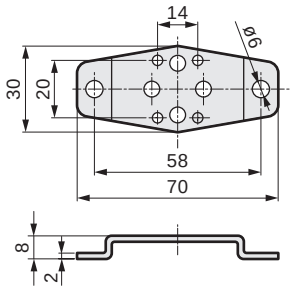

WFK2-100,250
Discrete option model No.:**WF-FL-636342**

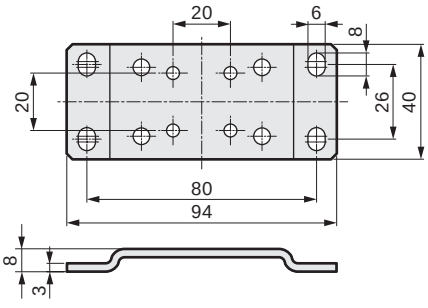

Wiring method

· Always read the safety precautions before wiring.

· The cable used is a 4-conductor cabtyre cable with a core wire of 0.5 mm^2.

***Keep the cable far away from power cords or other things that may cause noise. Noise can cause malfunctions.**

[Connector (male)]

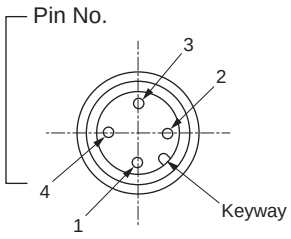

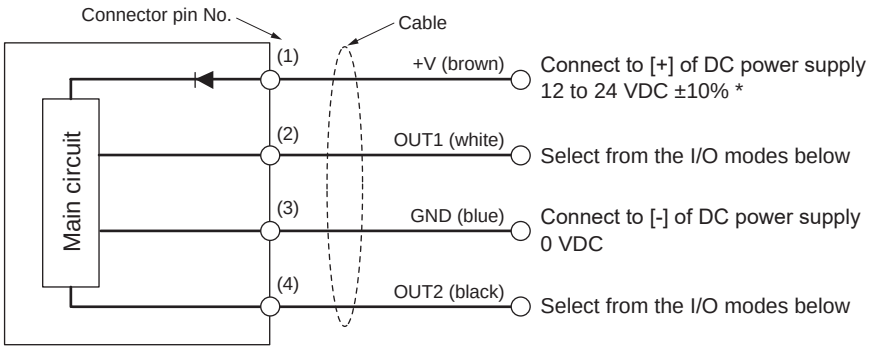

*With standard analog output (0 to 5 V/1 to 5 V). With option (4 to 20 mA/0 to 10 V/1 to 10 V), it is 24 VDC ±10%.

I/O mode

OUT 1: Analog flow output, analog temperature output, flow switch 1 output, flow switch 2 output, temperature switch 1 output, temperature switch 2 output, integrated pulse output, integrated switch output, external input, Off

OUT 2: Analog flow output, analog temperature output, flow switch 1 output, flow switch 2 output, temperature switch 1 output, temperature switch 2 output, integrated pulse output, integrated switch output, external input, IO-Link, Off

Item	[A, D] 0 to 5 V/ 1 to 5 V	[B, E] 4 to 20 mA	[C, F] 0 to 10 V/ 1 to 10 V
Allowable load weight	50 kΩ or more	500 Ω or less	50 kΩ or more

IO-Link parameter specifications

1. General

Item	Details
Communication protocol	IO-Link
Communication protocol version	V1.1
Transmission bit rate	COM2 (38.4 kbps)
Port	M12 Class A
Process data (input)	4-byte
Process data (output)	0-byte
Min. cycle time	5 ms
Data storage	1 kbyte
SIO mode support	None

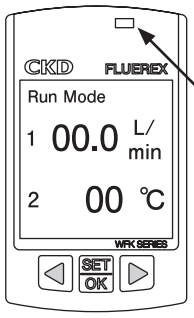

Power lamp (green)

· Lights when power supply is ON.
· Blinks during IO-Link communication.

2. Process data

Bit	31	30	29	28	27	26	25	24	23	22	21	20	19	18	17	16
Data name	MSB															LSB
	Flow rate															
Data range	Refer to Table 1															
Format	UInteger16															

Bit	15	14	13	12	11	10	9	8	7	6	5	4	3	2	1	0
Data name	Error	WARNING	–	–	Switch output				MSB							LSB
					4	3	2	1	Fluid temperature							
Data range	True/False								-10 to 110°C							
Format	Boolean								Integer8							

Data range (Table 1)

Flow rate range	005	020	050	100	250
Data range	0.00 to 5.50 L/min	0.0 to 22.0 L/min	0.0 to 55.0 L/min	0 to 110 L/min	0 to 275 L/min

* IODD file can be downloaded from the CKD website. (https://www.ckd.co.jp/en/)

Names and functions of display/operation section

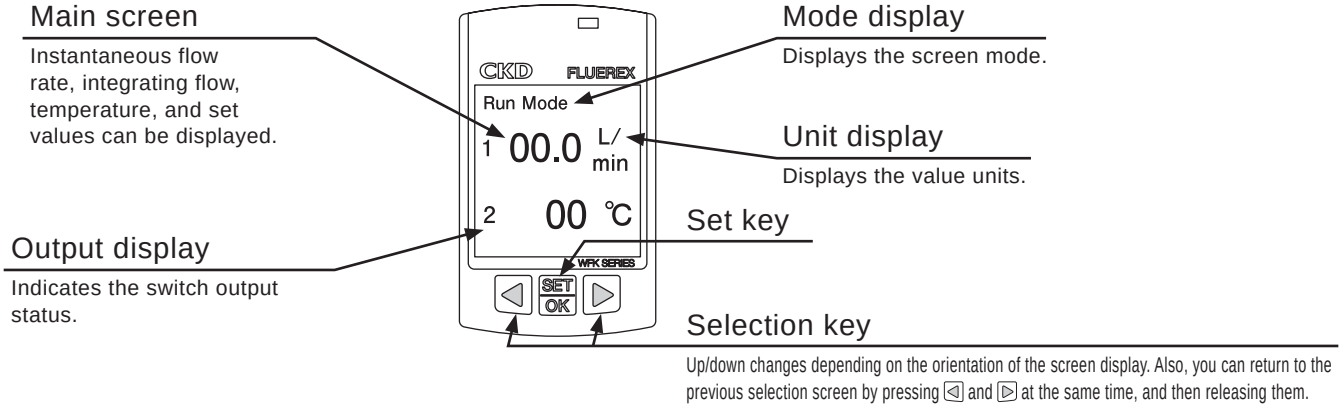

Output mode and output operation

1. Switch output

(1) Hysteresis mode
OUT 1 and 2 can both be set.
Can be set with instantaneous flow rate and temperature.
Can memorize 2 types each of instantaneous flow rate and temperature.

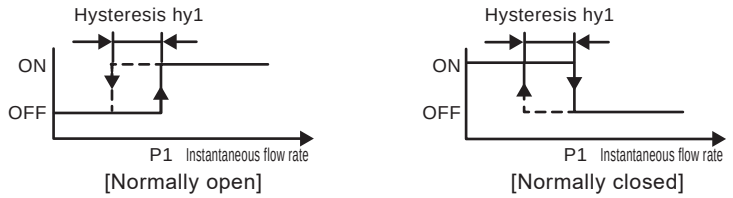

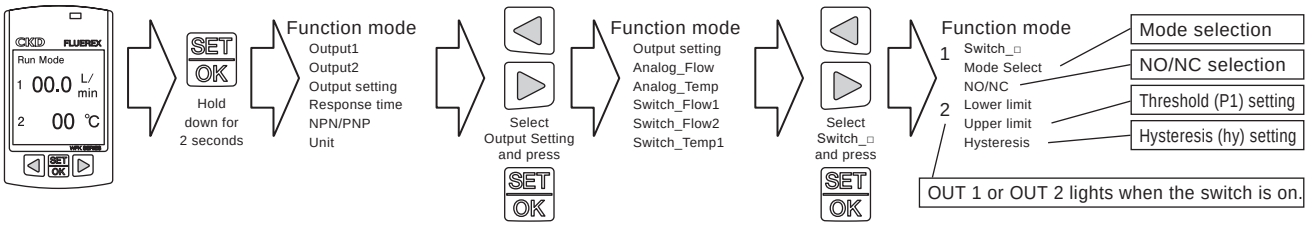

(2) Window mode
OUT 1 and 2 can both be set.
Can be set with instantaneous flow rate and temperature.
Can memorize 2 types each of instantaneous flow rate and temperature.

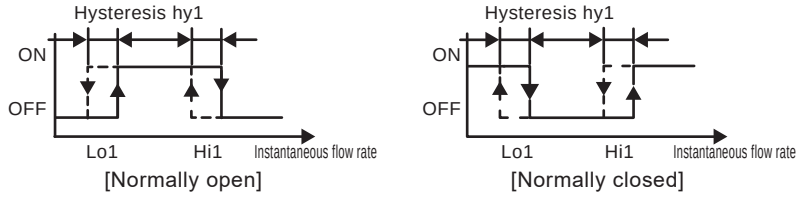

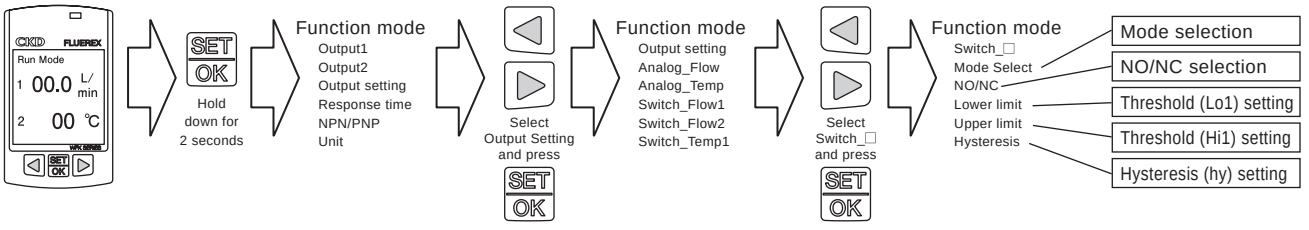

(3) Integrated output mode
OUT 1 and 2 can both be set.
Integrating flow can be reset through turning the power OFF, button operation, or external input.

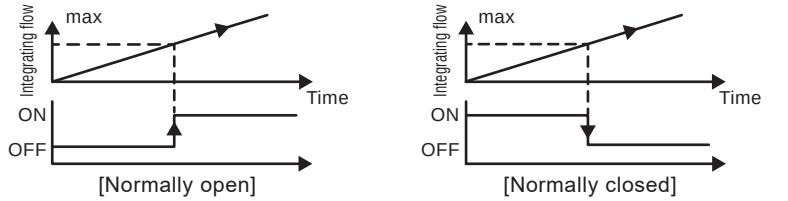

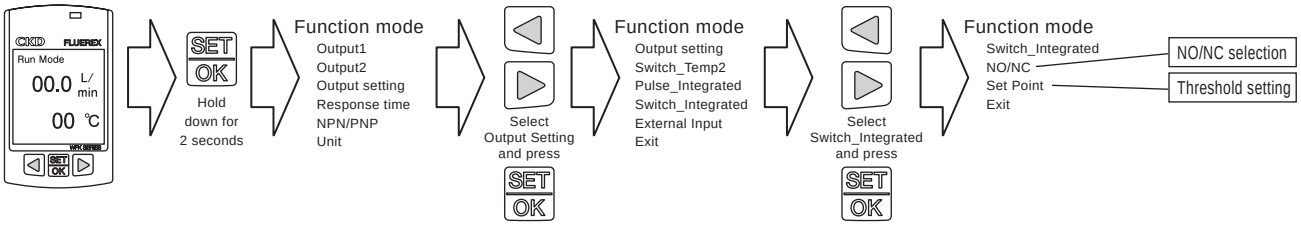

(4) NPN/PNP conversion

NPN and PNP can be converted.

*Switch between NPN and PNP with switch output OFF. Conversion settings are applied when the power is turned back ON.

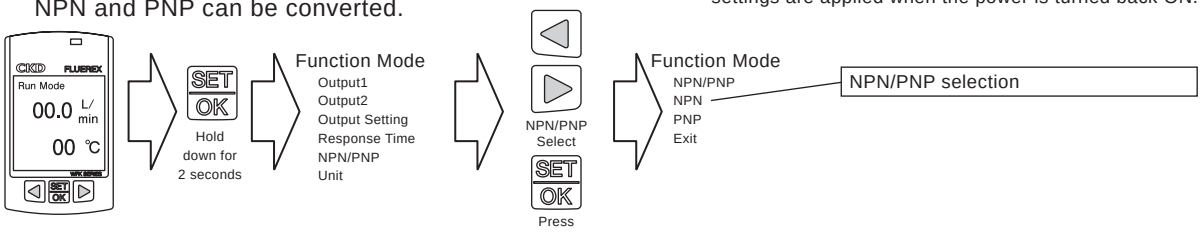

2. Integrated pulse output

Pulse output matches the integrating flow count.

Selectable pulse rates

Model	5L	20L	50L	100L	250L
0.1L	○	○			
0.5L	○	○	○		
1L	○	○	○	○	
10L		○	○	○	○
50L			○	○	○
100L				○	○

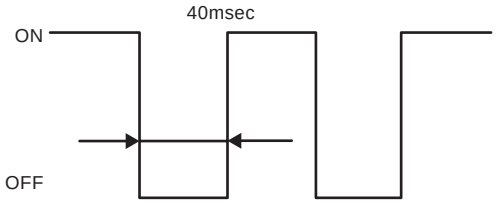

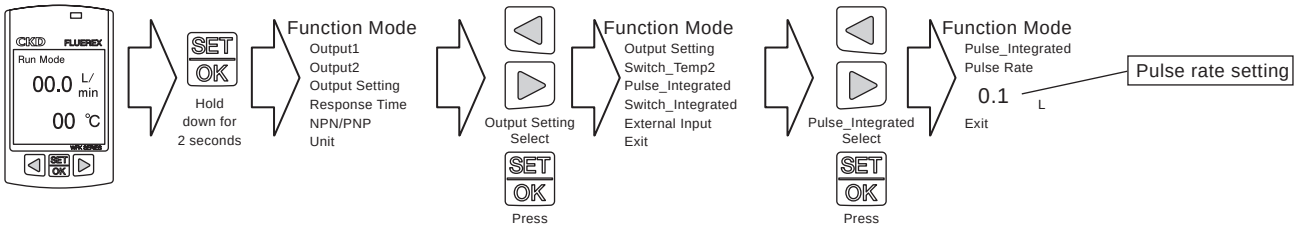

3. Analog output

(1) Output conversion

0 to 5V/1 to 5V Type: Select between 0 to 5V output and 1 to 5V output

4 to 20mA Type: No output switching

0 to 10V/1 to 10V Type: Select between 0 to 10V output and 1 to 10V output

Applied to instantaneous flow rate, temperature output

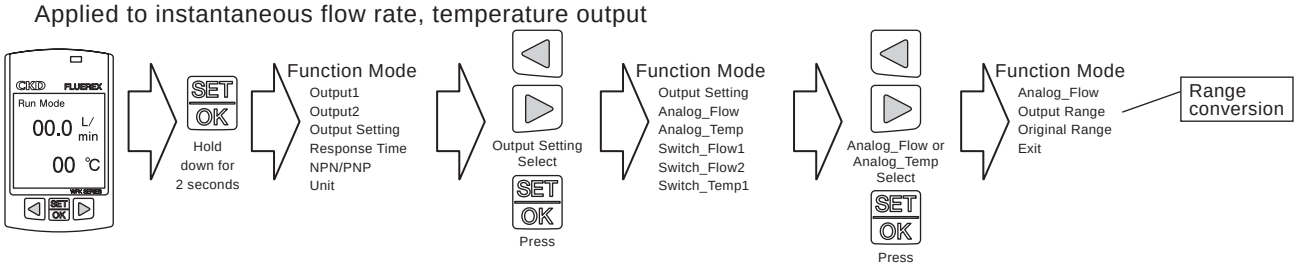

(2) Original analog output

An analog output function that freely sets the upper and lower limits of normal analog output.

*The set range cannot be greater than the max. flow rate of each flow rate range

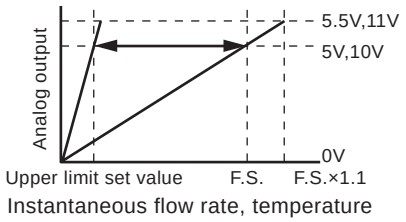

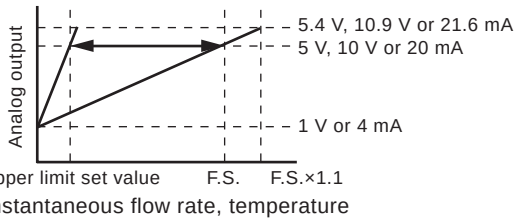

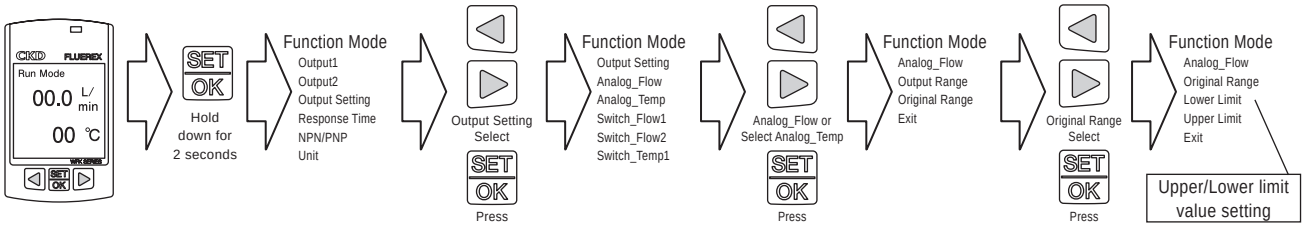

4. Span adjustment

Span adjustment can be set from 0.1 to 2.5 times with the initial flow rate value.
[Ex.] When set to 2.0 times

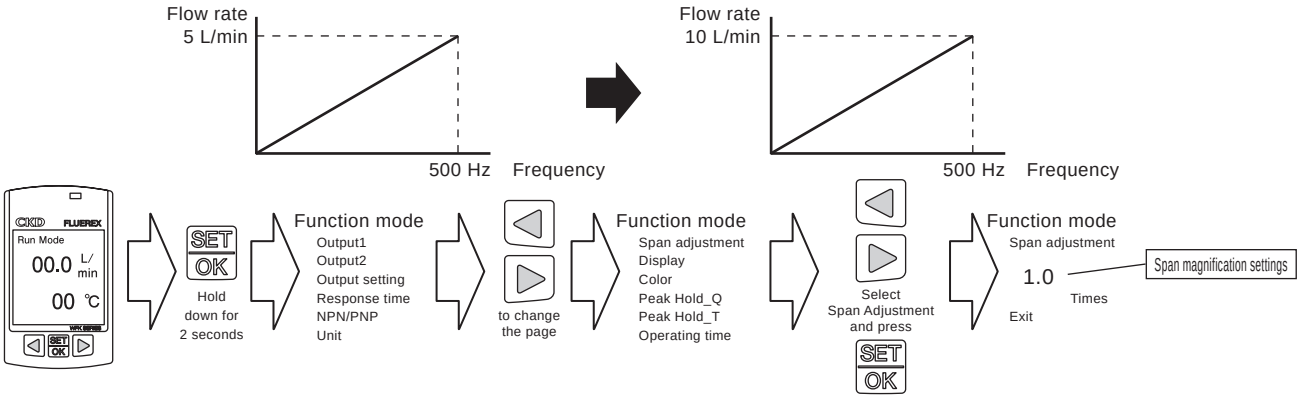

5. Setting response time

(1) Timer selection
Instantaneous flow rate response time (average movement time) can be changed.
Select from 0.25 sec, 0.5 sec, 1 sec, 5 sec, and 10 sec (1 sec at factory settings)

(2) Duration can be set from 0 to 9 sec
During switch output, the time it takes for the output to occur after exceeding the threshold can be set.

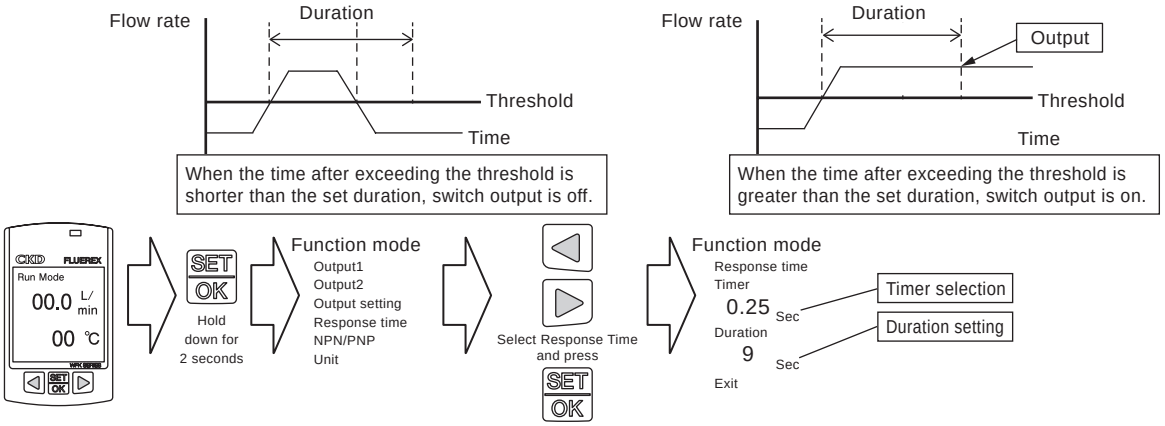

6. Peak hold function

The max. and min. flow rates of instantaneous flow rate and temperature can be confirmed.
The max. and min. flow rates can be reset through turning the power OFF, button operation, or external input.

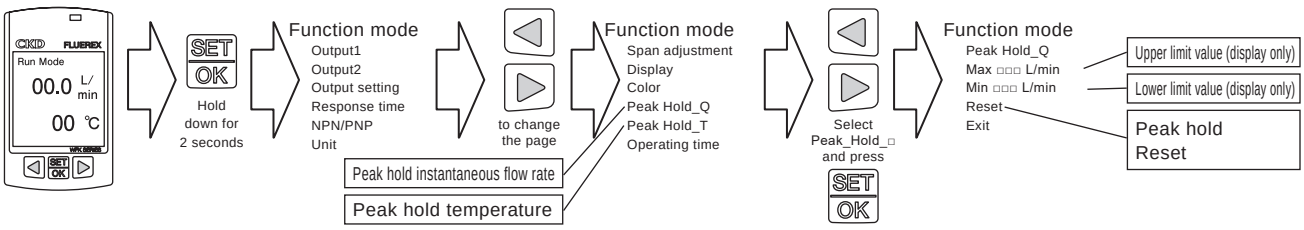

7. Energy Saving setting

Energy saving can be set to "ON" or "OFF".
When set to ON, the liquid crystal backlight turns OFF after 1 minute of inactivity.

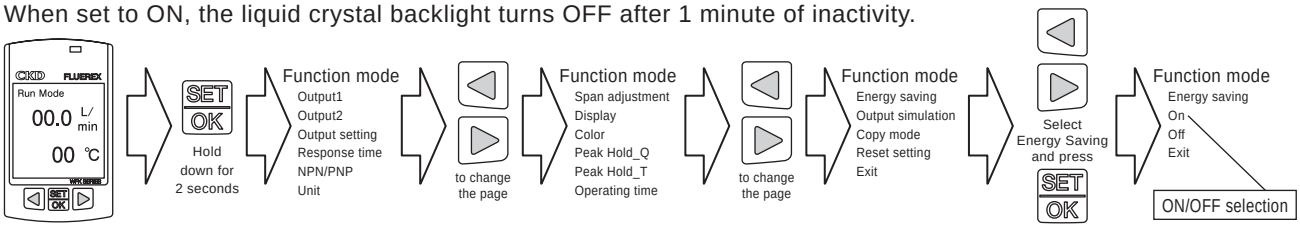

8. IO-Link

Acquiring measurement data, changing the threshold, and other bi-direction communication are possible with an IO-Link connection (OUT2 only).
* Only with IO-Link option

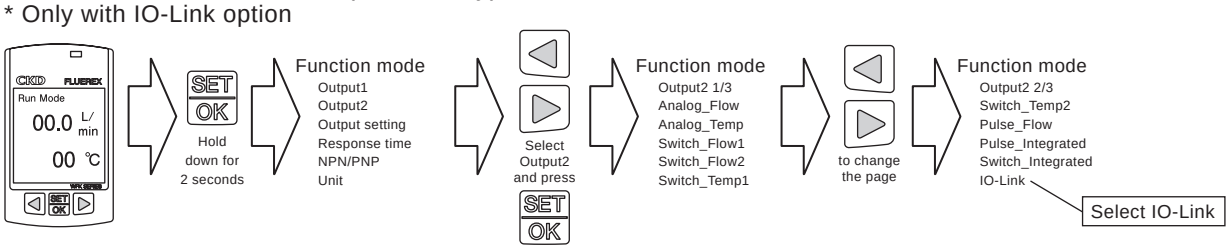

9. Screen display

(1) Display

Brightness: Select from 25%, 50%, 75%, and 100%.

Rotation: Select from 0°, 90°, 180°, and 270°.

Update time: Select from 0.25 sec, 0.5 sec, 1 sec, 5 sec, and 10 sec.

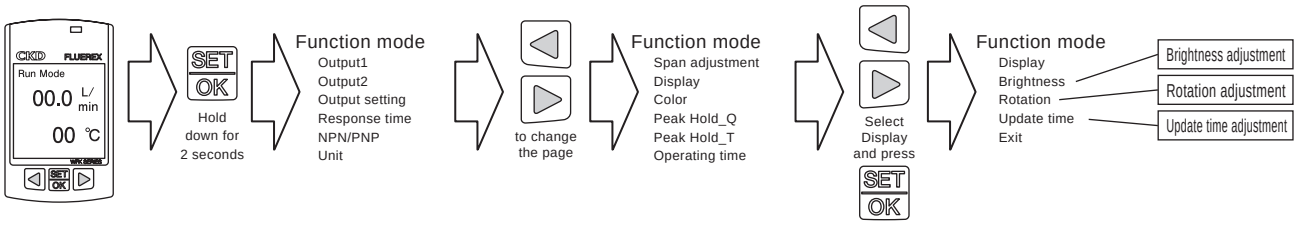

(2) Color

Main color: Changes the color of characters on the main display. (Select from white, green, and red)

Changed color: Changes the color when the instantaneous flow rate, integrating flow rate, and temperature go above or below their set upper and lower limits.

Change character color: Select from white, green, and red

· Upper limit setting: Upper limits of instantaneous flow rate, integrating flow rate, and temperature at which character color changes.

· Lower limit setting: Lower limits of instantaneous flow rate, integrating flow rate, and temperature at which character color changes.

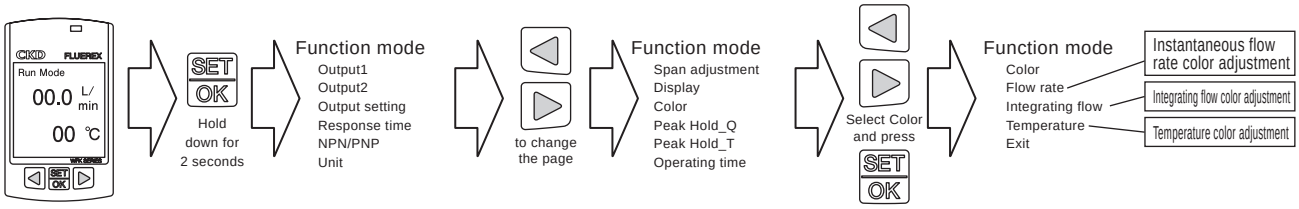

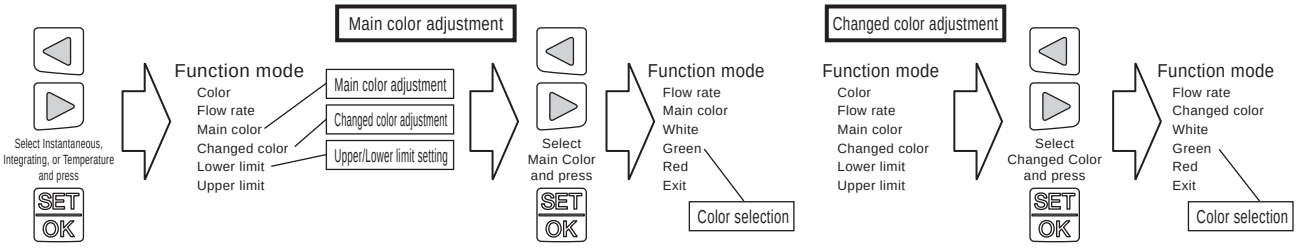

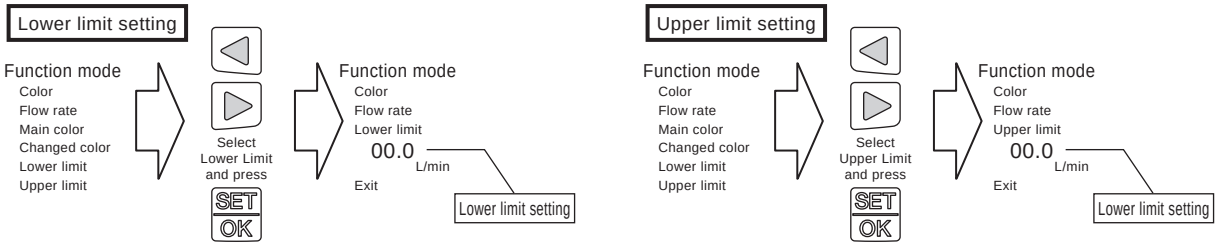

Refer to the instruction manual regarding operation of other functions (setting copy, external input, unit change, simulation output, power ON time display, all reset, etc.).

Easy setting function

Frequently used settings can be set from the normal screen using shortcut operations.

Changing main screen display

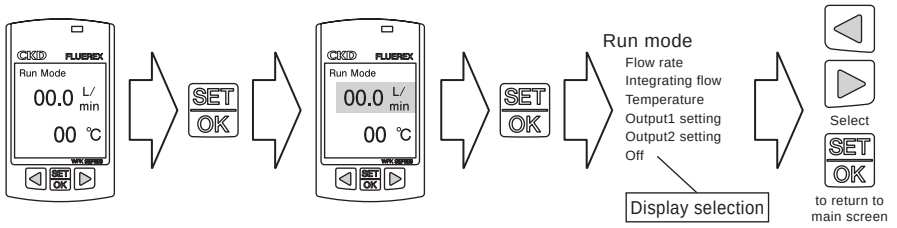

Switch setting

Hysteresis mode

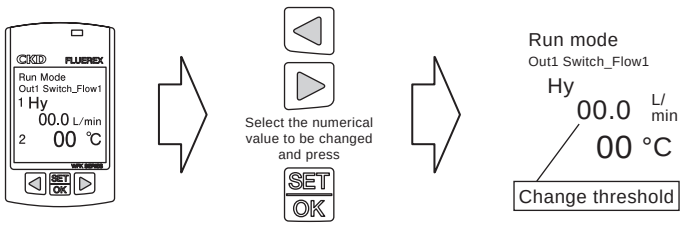

Window mode

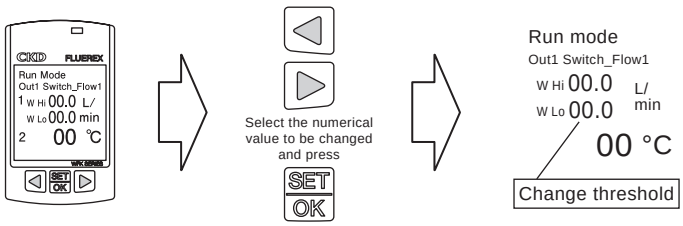

Integrated Switch setting

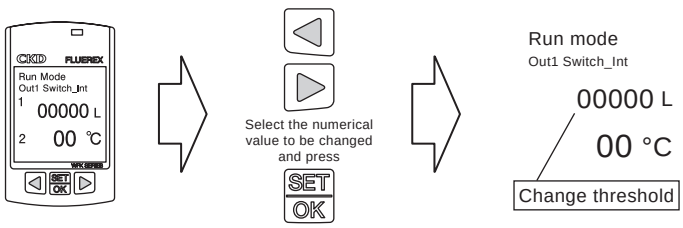

Integrated Pulse setting

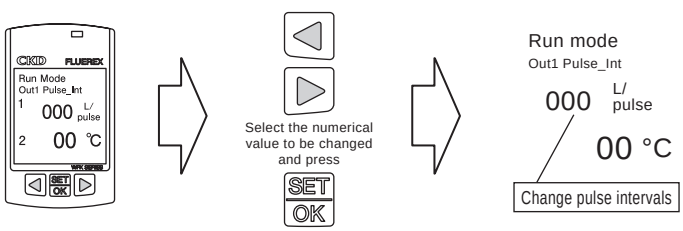

Integration reset

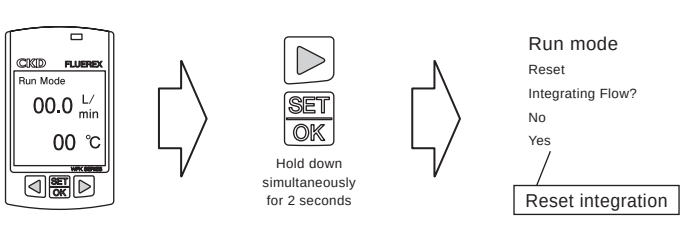

Key lock

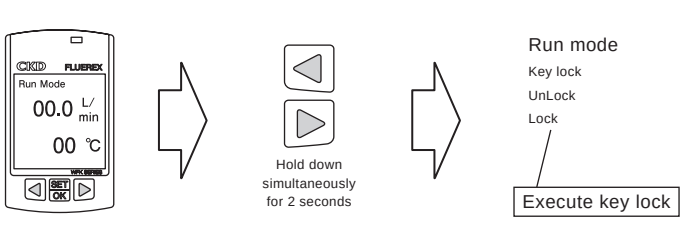

Safety Precautions

Be sure to read this section before use.
Refer to Intro Page 63 for general precautions.

Design/selection

1. Working fluids

⚠ DANGER

■ Do not use in drinking water.
As it does not conform to the requirements of the Food Sanitation Act, do not use this product for applications that measure water entering the human body. Intended applications include industrial sensors.

■ Never use this product with flammable fluids.

⚠ WARNING

■ This product cannot be used as a billing meter.
Do not use this product for commercial transactions as it is not compliant with the Measurement Act. It cannot be calibrated, so use it as an industrial sensor.

■ Applicable fluid is water (industrial water, pure water); do not use with any other fluid.

2. Working environment

⚠ DANGER

■ Flammable environment
Never use this product in an explosive gas atmosphere. The structure is not explosion-proof, and explosions or fires could occur. However, if the option (ATEX compatible) is selected, it can be used in the II3 G Ex ec II C T4 Gc X 0°C≤Ta≤50°C environment. Refer to "Options (ATEX compatible)" on page 1570 for working conditions.

⚠ WARNING

■ Corrosive environment
Do not use this product in an atmosphere containing corrosive gases such as sulfur dioxide.

■ Fluid temperature (and ambient temperature)
Use in a fluid temperature range of 1 to 95 °C, and an ambient temperature range of 0 to 50 °C. If the fluid temperature rises to 95 °C or higher, cool it down using a cooling system such as a chiller. As well, if there is a risk of freezing, drain the product or keep it warm to prevent freezing. When the fluid and ambient temperatures are high, the product may also get hot. There is a risk of burns if it is touched directly. Even if the ambient temperature is within the specified range, do not use this product in a location where rapid changes in temperature can occur.

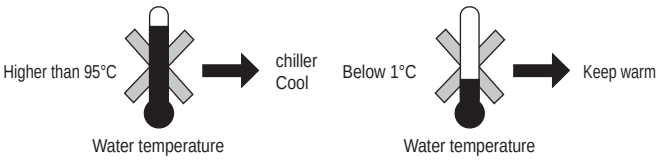

■ Max. working pressure
Do not use at a pressure exceeding the max. working pressure, as excessive pressure can cause product failure. To prevent the pressure from reaching the max. working pressure, particularly due to water hammer, take the following measures:
(1)To reduce a valve closing speed by using a water hammer reduction valve or the like.
(2)Using elastic piping material, e.g. rubber hose, and an accumulator, absorb the impact pressure.
(3) Make the pipe length as short as possible.

■ Drip-proof environment
This product employs a dust-proof, drip-proof structure that provides reliability during maintenance and cleaning, during which it may be exposed to water splashing. However, avoid using this product in a location where it may be constantly exposed to water or intense splattering of water and/or oil.

■ CE-compliance working conditions
This product is CE-marked, indicating conformity with the EMC Directives. EN61000-6-2; regulation matched to immunity applies to this product. Conditions below are necessary to comply with these standards.
Conditions
- The evaluation of this product is performed by using a cable that has a power supply line and a signal line paired to assess the product's performance.
- This product is not equipped with surge protection. Implement surge protection measures on the system side.

⚠ CAUTION

■ If there is a risk of foreign matter entering the fluid, use a filter (Strainer) on the primary side. If foreign matter adheres to the vortex generator or vortex detector, measurement accuracy can be compromised.

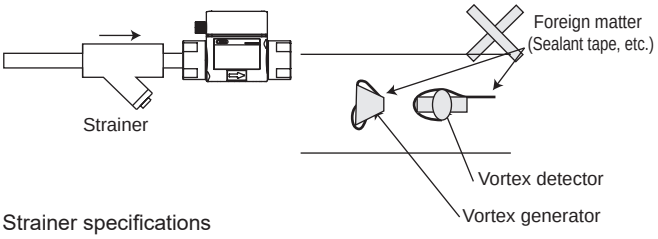

Strainer specifications

Descriptions	Usage
Specification fluid	Water
Pressure resistance MPa	2
Working pressure range MPa	0 to 1
Working ambient temperature °C	1 to 90
Main material	**Usage**
Body	Bronze casting
Strainer	Stainless steel

When using after adjusting to a small flow rate with the manual valve, open the manual valve°If the clearance is very small and foreign matter larger than this clearance is contained in the fluid, it may clog the clearance and reduce the flow rate.

External view of strainer

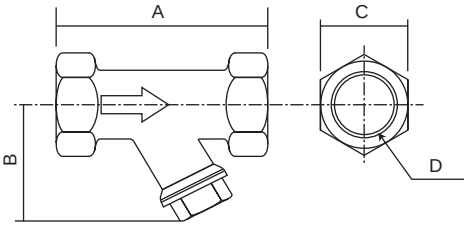

Model No.	A	B	C	D
WF-FL-280730	70	44	23	Rc 3/8
WF-FL-280731	80	49	28	Rc 1/2
WF-FL-280732	100	57	35	Rc 3/4
WF-FL-280733	115	72	43	Rc 1
WF-FL-280734	135	82	52	Rc1 1/4
WF-FL-280735	160	98	59	Rc1 1/2

Design/selection

■ Vibration/impact

Do not use this product in an environment exposed to vibrations of 20 m/s^2 and over and shocks of 98 m/s^2 and over. This may cause malfunction and/or damage, as this product uses the Karman's vortex type detection principle.

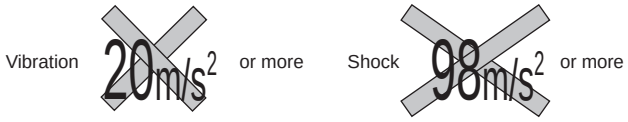

Mounting, installation and adjustment

1. Wiring

⚠ DANGER

■ Use with power supply voltage and output in the specified range.

Applying a voltage that is outside of the specified range causes error. Operatingdamage to the sensor, electric shock, or fire. Do not use any load that exceeds the rated output. Using such a load may result in damage to the output part or fire.

⚠ WARNING

■ Check the line color and terminal number when connecting wires.

An overcurrent protection circuit for the output transistor and a protection circuit for erroneous wiring, which uses diodes to prevent reverse connection, are implemented, but these do not protect against all incorrect wiring. Incorrect wiring can result in malfunction, failure, or damage to the sensor. Check the instruction manual for wiring colors and terminal numbers in order to ensure correct wiring.

■ Ensure that wires are properly insulated.

Check that wires do not come into contact with other circuits, that no ground faults occur, and that the insulator between terminals is not defective. Otherwise, overcurrent may flow into the sensor, causing damage.

⚠ CAUTION

■ Keep the cable far away from power cords or other things that may cause noise. Noise can cause malfunctions.

■ Keep unused wires from coming into contact with other wires.

■ Do not short-circuit the output transistor.

When a load is short-circuited, overcurrent protection circuit is triggered to prevent damage to the output transistor; however, if this state persists, the output transistor could be damaged.

Overcurrent Protection: Approx. 50 mA

■ Do not use a load that can produce surge voltage.

While an element that protects against surge is inserted, repeated exposure to surges can lead to damage. Use relays and solenoid valves that are equipped with surge absorbers. If there is a surge source on the same power supply line, similarly implement surge protection.

■ Make sure that the lead wire is free of repeated bends and tension. This may lead to disconnection.

■ Screw the M12 connector on the back.

If not screwed in to the back, the connector's waterproof performance may not be exhibited, and water may enter wiring parts and cause malfunction or display deterioration.

2. Piping

⚠ CAUTION

■ Pipes can be installed in any orientation, vertical, horizontal, etc. Note that pipes should be installed so that the fluid constantly fills the piping while it flows through the pipes. When installing a pipe vertically, making the fluid flow upward can reduce the influence of air bubbles inside.

■ If a pipe is narrowed just before the flow rate sensor, or if there is a valve or other restricting component on the primary side, cavitation occurs inside the pipe, preventing accurate measurement. For this reason, such piping should be installed on the secondary side of the sensor.When inevitably disposing valves on the primary side, be sure to provide a straight pipe with a diameter of 10 times or more bore size between the valve and the flow rate sensor.

(Cavitation: Vapor cavities that form due to the static pressure at end points, such as a ship propeller, dropping below the vapor pressure of the water. Reduced efficiency or screw damage may result.)

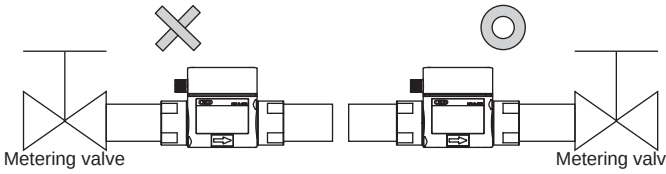

■ Operating the pump with the secondary side valve closed may cause the flow rate sensor to detect pressure waves from the pump, resulting in incorrect indication. If this occurs, install the valve on the primary side. When doing so, ensure that a straight pipe with a diameter of 10 times or more bore size is installed between the valve and the flow rate sensor.

■ Using an elbow or bush in the piping

When using an elbow or bush in the piping, provide straight piping sections of at least 10 D on the IN side and 5 D on the OUT side when using a WFK2-100 or WFK2-250 Series model. Note that bore size change by bush should be limited to one size. Without a straight pipe, measurement accuracy can be compromised due to disturbances in the flow rate and/or pressure distribution. (Straight pipes are not necessary for the WFK2-005, WFK2-020, and WFK2-050 Series. However, it is recommended that a straight pipe is installed to ensure stable measurements.)

*where "D" indicates the inner diameter of the piping material. Refer to the table below for specific values.

Bore size	Rc3/8 (10 A)	Rc1/2 (15 A)	Rc3/4 (20 A)	Rc1 (25 A)	Rc1 1/4 (32 A)	Rc1 1/2 (40 A)
5D	50 mm	75 mm	100 mm	125 mm	160 mm	200 mm
10D	100 mm	150 mm	200 mm	250 mm	320 mm	400 mm

■ Tighten pipes with the appropriate torque.

- The purpose is to prevent water leakage and screw damage.
- First tighten the bolts by hand to ensure that the threads are not damaged, then use a tool.

[Recommended values]

Port thread	Tightening torque N·m
Rc3/8	31 to 33
Rc1/2	41 to 43
Rc3/4	62 to 65
Rc1	83 to 86
Rc1 1/4	94 to 100
Rc1 1/2	104 to 108



- When mounting piping or fittings to this product, always hold the attachment on the mounting side with a tool. Remove the body of the product or the attachment Otherwise, it may be damaged.

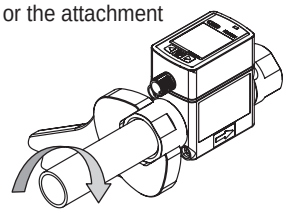

■ When installing piping, align the fluid flow direction to the direction marked on the body. Connecting the pipe in the wrong direction prevents correct measurement of the flow rate.

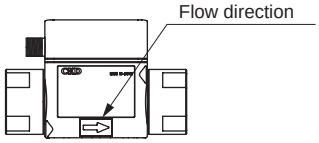

■ Before installing piping, clean the pipes to remove foreign matter, cutting chips, residual testing water, etc.

■ Make sure that no force is applied to the resin parts when piping.

■ Make sure that the self-weight of the piping is not applied to flow rate sensor. It may lead to damage or external leakage. We recommend that piping be fixed during operation. ■ Make sure that no sealing tape or adhesive enters the pipes when connecting the piping.

■ When freezing may occur, take antifreezing measures with the working Component, such as draining the pipes of water.

■ If there is significant difference between the ambient temperature and the fluid temperature, condensation occurs, which can enter wiring parts and cause operation failure. If condensation should occur, ensure that the mounting orientation of the flow rate sensor is horizontal and the display is facing upward.

■ When connecting pipes, wrap sealant tape in the opposite direction from the threading, from the inside position to within 2 mm from the pipe end.

- If sealing tape protrudes from the pipe threads, it could be cut when screwing the bolts in. This could cause the tape to enter the components, causing failures.
- When using a liquid sealant, make sure to keep it away from resin parts. Otherwise resin parts could be damaged, which is dangerous.

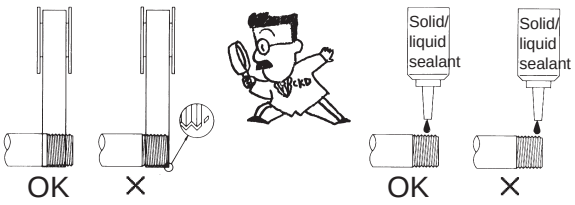

Use/maintenance

1. Common

⚠CAUTION

- If a problem occurs during operation, immediately turn the power OFF, stop use, and contact your dealer. The display may become warm (approximately 40°C), but this is not an abnormality.
- Hardware check and other internal settings are performed during the first two seconds or so after turning ON the power. Display and output do not function normally during this period. Particularly, if a transistor output is used in the control of an interlock circuit, an abnormal stop may occur. Mask the output during this period.
- If the output setting value is changed, control system devices could operate unintentionally. Stop devices before changing settings.
- Ensure proper operation through periodic inspections.
- When removing the component, shut OFF power, make sure that no water pressure is applied, and take other safety precautions beforehand.
- Do not disassemble or modify this product. Doing so could result in faults.
- When cleaning the product, use a low-polluting cleaning agent such as a neutral detergent.
- Be sure to perform air blow from the downstream direction. Set pressure to 0.3 MPa or less.
- After adjusting the flow rate, be sure to fix the manual valve with the push lock.
- Avoid forcefully over-rotating the flow rate adjustment manual valve.
- As liquid crystal is used, do not press down on the display section. This may lead to failure.

2. Applicable fluid

⚠CAUTION

- Follow the precautions below for the applicable fluids to be measured. If the following water quality standards are not met, performance may be compromised.
- The water quality of the applicable fluid should be according to the “Guideline of Water Quality for Refrigeration and Air Conditioning Equipment” (Water quality standard: Cooling system - Circulating type - Circulating water) provided by the Japan Refrigeration and Air Conditioning Industry Association.

Item	Chemical formula	Unit	Water quality standard
pH	–	pH(25°C)	6.5 to 8.2
Electrical conductivity	–	mS/m(25°C)	0.2 to 80 *1
Chloride ion	Cl^-	mg/L(ppm)	200 or less
Sulfate ion	SO_4^{2-}	mg/L(ppm)	200 or less
acid consumption(pH4.8)	$CaCO_3$	mg/L(ppm)	100 or less
Total hardness	$CaCO_3$	mg/L(ppm)	200 or less
Calcium hardness	$CaCO_3$	mg/L(ppm)	150 or less
Ionized silica	SiO_2	mg/L(ppm)	50 or less
Iron	Fe	mg/L(ppm)	1.0 or less
Copper	Cu	mg/L(ppm)	0.3 or less
Sulfide ion	S^{2-}	mg/L(ppm)	Not detected
Ammonium ion	NH_4^+	mg/L(ppm)	1.0 or less
Residue chlorine	Cl	mg/L(ppm)	0.3 or less
Free carbonic acid	CO_2	mg/L(ppm)	4.0 or less
Stability index	–	–	6.0 to 7.0

*1 Electrical conductivity should be 0.2 mS/m and over. For use in the range of 0.05 to 0.2 mS/m, consult with CKD. Do not use for ultrapure water, i.e. water with electrical conductivity below 0.05 mS/m.

Option (ATEX compatible)

■ The following are supported.
II3 G Ex ec II C T4 Gc X 0°C≤Ta≤50°C

■ Working conditions (X notation)
1)When using, store this in a protection box and protect the flow rate sensor from all directions.
Protection box strength: Higher strength than DC01, DC03, DC04, DC05, DC06, DC07
Plate thickness: 1 mm or more
Clearance between flow rate sensor and plate: 70mm or more
2) There is a risk of static discharge. Attach to grounded metal and wipe with a wet cloth.
3) Use in a clean environment with a contamination level of 2 or more.

■ Fluid temperature rating
The temperature of the fluid measured for explosion-proof specifications is 95°C.

■ ATEX Directive
EN standards for explosive atomosheres
EN 60079-0:2012/A11:2013
EN 60079-7:2015

⚠ WARNING

■ Do not remove or insert cables while energized in an explosive atmosphere.

⚠ CAUTION

■ Use an M12 cable compatible with the ATEX directive.

Capacitance flow sensor

WFC

■ **Sensors/controller/flow rate sensor**



CONTENTS

Product introduction	1572
● WFC Type with IO-Link and fluid temperature measurement function	1574
● WFC Standard	1576
Wiring method	1580
Functions	1583
⚠ Safety precautions	1586

Flow rate sensor with Flo-Thru structure

No clogging of foreign matter

The Flo-Thru structure allows even water of poor quality to be used.

No detection failure

The capacitance structure reduces the likelihood of detection failures caused by foreign matter deposited onto the electrode.

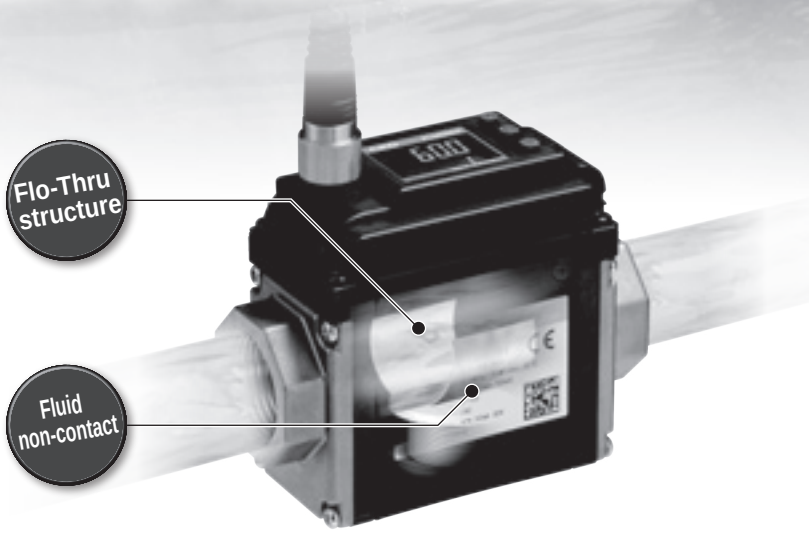

Improved installation

Ensures elbow piping repeatability.

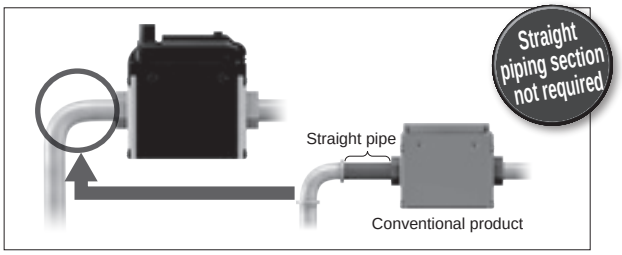

Noise resistance

Stabilized power supply and anti-noise ferrite core are not required.

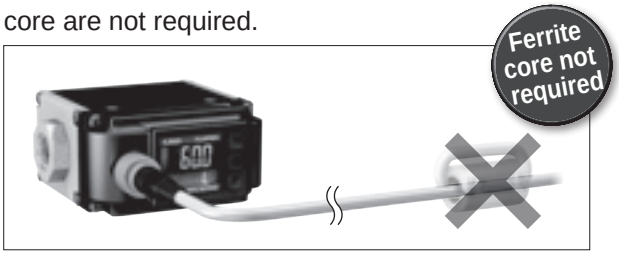

Introducing the IO-Link model

IO-Link

IO-Link is a digital communication standard for sensors/actuators at factory sites. (IEC 61131-9)
Unlike analog communication, it enables the transmission of parameters and event data.

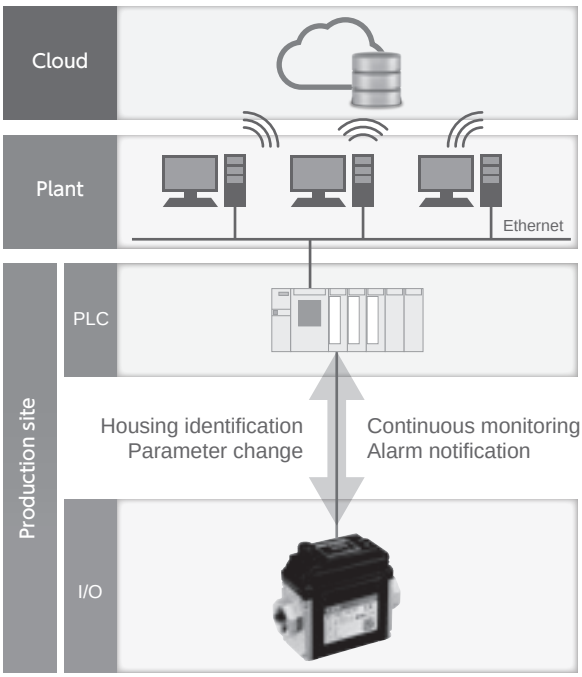

Features of IO-Link



Constant monitoring via digital data is possible.



Parameters can be set and changed via the network, enabling remote operation of the device.



Model Nos. and serial Nos. can be checked via the network.



Settings can be copied from the master (scanner) side, making troublesome parameter resetting during maintenance unnecessary.



Device failure and disconnection can be confirmed.



The network can also be changed to Ethernet connection, making the device a part of IoT.

Fluid temperature measuring function (option)

Saves space and wiring time with no need for a separately installed fluid temperature sensor.



Remote zero adjustment

Allows zero point adjustment by external input.

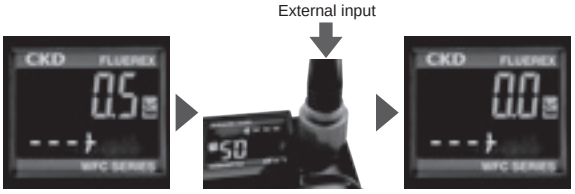

Allows parallel installation

Changing the mode allows parallel installation.

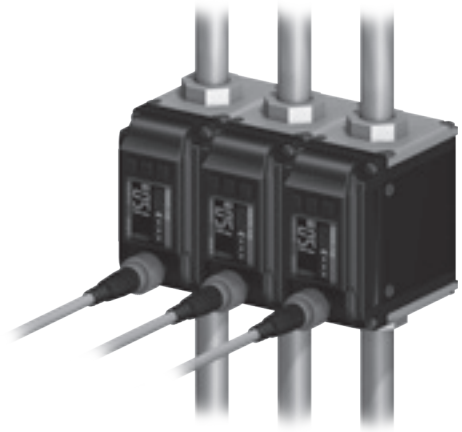

Max. working pressure 2.0 MPa

Usable even with medium pressure coolants.

With 180° invertible display

It can be displayed flexibly to suit the device.

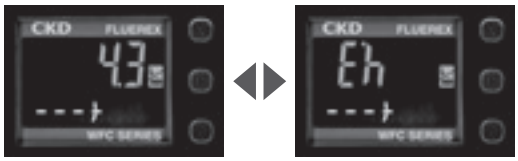

Improvement of visibility

The 2-color display and flow direction arrow allow easy recognition.

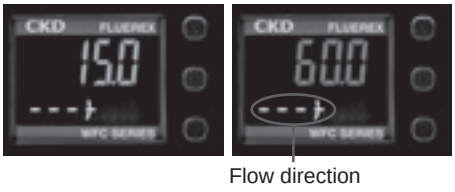

Easy setting

Settings can be easily changed using shortcut operation. *For details, refer to page 1585.

Capacitance flow sensor

WFC Series

Examples of applications

Welding Spot welding machine

Spot welding machine coolant control and flow rate abnormality detection for chip fallout

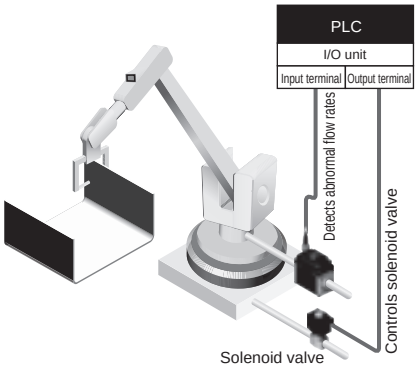

Machining Machine tools

Flow rate management of water-soluble coolant

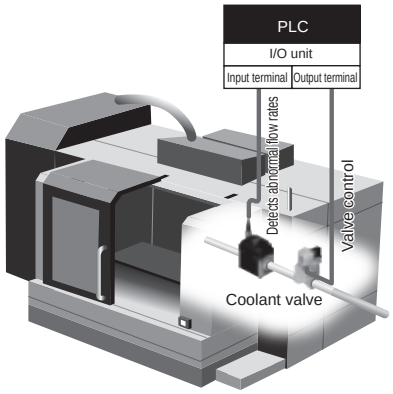

Hardening Induction hardening device

Quantitative management of cooling water

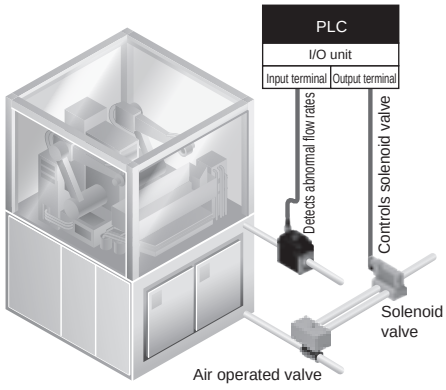



Capacitance electromagnetic flow sensor

WFC Series

Type with IO-Link and fluid temperature measurement function

● Flow rate range: 0.5 to 15/2.0 to 60 L/min

Specifications

Port size			Rc3/8, G3/8, 3/8NPT	Rc1/2, G1/2, 1/2NPT	Rc3/4, G3/4, 3/4NPT
Applicable fluid			Fluids (conductive fluids) that do not corrode water/wetted part materials		
Available fluid conductivity			5 μS/cm or more		
Detection			Capacitance		
Rated flow range			0.5 to 15 ℓ/min	2.0 to 60 ℓ/min	
Low flow cut flow rate *1			Measured range max. flow rate of 3%		
Working fluid temperature *8			0 to 85°C (no freezing)		
Unit indicated			Instantaneous flow rate L/min Accumulated flow L, kL, ML Fluid temperature °C		
Flow rate	Repeatability *2		±2.0% F.S.		
	Ambient temperature characteristics *2		±5.0% F.S (base temperature 25 °C)		
	Fluid temperature characteristics *2		±5.0% F.S (base temperature 25 °C)		
Fluid temperature	Measurement range		0 to 85 °C (operational range is -10 to 110 °C)		
	Measurement accuracy		±2 °C (less than 50 °C) *The difference between the fluid temperature and the ambient temperature is within ±5 °C ±5 °C (50 °C and over) *The difference between the fluid temperature and the ambient temperature is within -35 °C		
Working pressure (according to the fluid temperature conditions) *8			0 to 1.0MPa (0 to 85°C), 0 to 2.0MPa (0 to 50°C)		
Proof pressure			3.0 MPa		
Response time *3			0.1 s/0.25 s/0.5 s/1 s/2 s/5 s (default 1 s)		
Accumulated flow range			0.0 to 99999999.9L		
			0.1 L increments		
Pressure loss *9			0.02 MPa or less (at max. rated flow)		
Switch output			NPN or PNP MOS-FET output (switchable with settings)		
	Max. load current		50mA		
	Max. applied voltage		30 VDC		
	Internal voltage drop		NPN: 2.0 V or less PNP: 2.4V or less		
	Output protection		Overcurrent abnormal alarm, overcurrent protection		
	Output mode		Select from hysteresis mode, window comparator mode, integrated output mode, integrated pulse output mode, and Select from alarm output mode and frequency pulse output mode		
Analog output		Voltage output	Voltage output: 1 to 5 V load impedance: 50 kΩ or more		
		Current output	Current output: 4 to 20 mA Load impedance: 500 Ω or less		
Switch input		Input time	20 ms or more		
		Short-circuit current	Approx. 2 mA		
Display			2-screen display (main screen: green/red 2-color display, sub-screen: white) Screen flip possible Instantaneous flow rate: 3 digits Liquid temperature: 2 digits Integrating flow: 4 digits Screen refresh cycle 5 times/sec		
Power supply voltage			When setting switch output: 24 VDC ±10% (ripple P-P ±10% or less)		
			When setting IO-Link: 20 to 30 VDC (ripple P-P ±10% or less)		
Current consumption			65 mA or less (with 24 VDC, 25 °C)		
Environmental resistance	Degree of protection		IP65 equiv. *5		
	Operating ambient temperature range		0 to 50°C (no condensation)		
	Ambient humidity range		35 to 85% RH (no condensation)		
Mounting orientation			Unrestricted in vertical/horizontal direction		
Compliant standards			EC Directives (EMC Directive, RoHS Directive)		
Material of wetted parts			PPS, FKM, CAC804, C6931		
Weight	Body *4		Approx. 460 g	Approx. 490 g	Approx. 520 g
	Cable	Cable	Approx. 170 g		
		L type cable			
		Two-sided connector cable	Approx. 180 g		
		L type two-sided connector cable	Approx. 100 g		
	Bracket		Approx. 30 g		

*1: Flow rate less than the low flow cut flow rate displays 0 ℓ/min.
*2: Characteristics when the response time is 1 s.
*3: The response time to reach 63% of the value in relation to the step input.
*4:When using options, add the weight of optional parts.
*5: Degree of protection is when the cable option is mounted.
*6: Contact CKD when installing in parallel at intervals of less than 50 mm.
*7: Piping port and body metal part are grounded to DC (-)/blue wire. This product cannot be used in (+) ground power supply. Contact CKD if using in (+) ground power supply.
*8: Fluid temperature for 0 to 1.0MPa working pressure. When working pressure is 0 to 2.0 MPa, use with a fluid temperature of 0 to 50 °C. (Refer to the graph on the following page for the usable range.)
*9: JIS B 8570 -1.
*10: Refer to the instruction manual for IO-Link Parameter specifications. IODD files can be downloaded from the CKD website. (https://www.ckd.co.jp/en/)

How to order

WFC - 150 - 10A - CT - C3

- Ⓐ Flow rate range
- Ⓑ Port size
- Ⓒ IO-Link/fluid temperature measurement
- Ⓓ Option (attachment)

Code	Description
Ⓐ Flow rate range	
150	0.5 to 15 L/min
600	2.0 to 60 L/min

Ⓑ Port size

	Flow rate range	150	600
10*	3/8	●	
15*	1/2		●
20*	3/4		●

*** Thread**	
A	Rc thread
G	G thread
N	NPT thread

Ⓒ IO-Link/fluid temperature measurement *1	
C	IO-Link compatible
CT	With IO-Link compatible, fluid temperature measurement function
T	With fluid temperature measuring function

Ⓓ Option (attachment) *2	
Blank	None
C3	Cable (M12/4-conductor/3 m) included
L3	L type cable (M12/4-conductor/3 m) included
B3	Two-sided connector cable (M12/4-conductor/3 m) included
G3	L type two-sided connector cable (M12/4-conductor/3 m) included
B	Bracket included

*1: Configuration to analog output/switch output is also possible. For details, refer to page 1580.

*2: Codes of attachments are not indicated in the product body model No. display section. For example, in the case of WFC-150-10A-CT-C3B
Product body (display): "WFC-150-10A-CT"
Cable (packaging display): "WFC-C3"
Bracket (packaging display): "WFC-B"
Of these three sets, "WFC-150-10A-CT-C3B" is displayed on the bag or box containing the entire package.

[Example of model No.]

WFC-150-10A-CT-C3B

- Ⓐ Flow rate range : 0.5 to 15 L/min
- Ⓑ Port size : Rc3/8
- Ⓒ IO-Link/fluid temperature measurement : With IO-Link compatible, fluid temperature measurement function
- Ⓓ Option : Cable, bracket included

● Discrete option (cable, bracket) model No.

WFC - C3

Ⓓ Option

Operating ambient temperature range

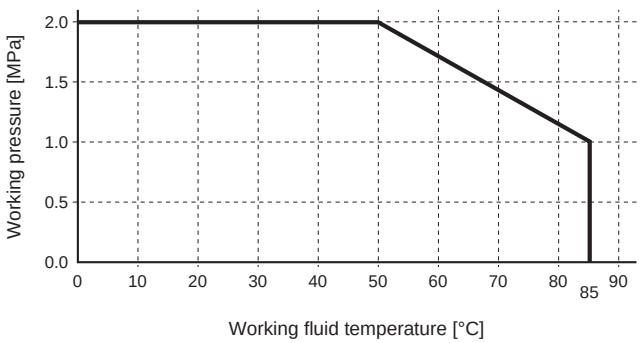

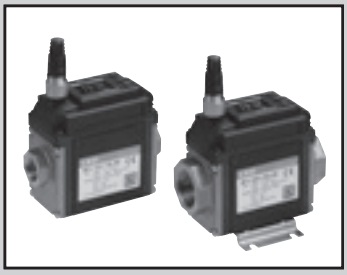

Capacitance electromagnetic flow sensor

WFC Series

Standard

● Flow rate range: 0.5 to 15/2.0 to 60 L/min

Specifications

Port size			Rc3/8, G3/8, 3/8NPT	Rc1/2, G1/2, 1/2NPT	Rc3/4, G3/4, 3/4NPT
Applicable fluid			Fluids (conductive fluids) that do not corrode water/wetted part materials		
Available fluid conductivity			5 μS/cm or more		
Detection			Capacitance		
Rated flow range			0.5 to 15 ℓ/min	2.0 to 60 ℓ/min	
Low flow cut flow rate		*1	Measured range max. flow rate of 3%		
Working fluid temperature		*8	0 to 85°C (no freezing)		
Unit indicated			Instantaneous flow rate ℓ/min Accumulated flow L, kL, ML		
Repeatability		*2	±2.0% F.S.		
Temperature characteristics	Ambient temperature characteristics *2		±5.0%F.S (base temperature 25°C)		
	Liquid temperature characteristics *2		±5.0%F.S (base temperature 25°C)		
Working pressure (according to the fluid temperature conditions)		*8	0 to 1.0MPa (0 to 85°C), 0 to 2.0MPa (0 to 50°C)		
Proof pressure			3.0 MPa		
Response time		*3	0.25 s/0.5 s/1 s/2 s/5 s (default 1 s)		
Accumulated flow range			0.0 to 99999999.9L		
			0.1 L increments		
Pressure loss		*9	0.02 MPa or less (at max. rated flow)		
Switch output			NPN or PNP transistor output		
	Max. load current		50mA		
	Max. applied voltage		30 VDC		
	Internal voltage drop		NPN: 2.0 V or less PNP: 2.4V or less		
	Output protection		Overcurrent abnormal alarm, overcurrent protection		
	Output mode		Select from hysteresis mode, window comparator mode, integrated output mode, integrated pulse output mode, and alarm output mode.		
Analog output	Voltage output		Voltage output: 1 to 5 V load impedance: 50 kΩ or more		
	Current output		Current output: 4 to 20 mA Load impedance: 500 Ω or less		
Switch input	Input time		20 ms or more		
	Short-circuit current		Approx. 2 mA		
Display			2-screen display (main screen: green/red 2-color display, sub-screen: white) Screen flip possible Instantaneous flow rate: 3 digits Integrating flow: 4 digits Screen refresh cycle 5 times/sec		
Power supply voltage			24 VDC ±10% (ripple P-P ±10% or less)		
Current consumption			65 mA or less		
Environmental resistance	Degree of protection		IP65 equiv. *5		
	Operating ambient temperature range		0 to 50°C (no condensation)		
	Ambient humidity range		35 to 85% RH (no condensation)		
Mounting orientation			Unrestricted in vertical/horizontal direction		
Compliant standards			EC Directives (EMC Directive, RoHS Directive)		
Material of wetted parts			PPS, FKM, CAC804, C6931		
Weight	Body	*4	Approx. 460 g	Approx. 490 g	Approx. 520 g
	Cable	Cable	Approx. 170 g		
		L type cable			
	Bracket		Approx. 30 g		

*1: Flow rate less than the low flow cut flow rate displays 0 ℓ/min.
*2: Characteristics when the response time is 1 s.
*3: The response time to reach 63% of the value in relation to the step input.
*4: When using options, add the weight of optional parts.
*5: Degree of protection is when the cable option is mounted.
*6: Contact CKD when installing in parallel at intervals of less than 50 mm.
*7: Piping port and body metal part are grounded to DC (-)/blue wire. This product cannot be used in (+) ground power supply. Contact CKD if using in (+) ground power supply.
*8: Fluid temperature for 0 to 1.0MPa working pressure. When working pressure is 0 to 2.0 MPa, use with a fluid temperature of 0 to 50 °C. (Refer to the graph on the following page for the usable range.)
*9: JIS B 8570 -1.

How to order

WFC - 150 - 10A - N V - C3

- Ⓐ Flow rate range
- Ⓑ Port size
- Ⓒ Switch output
- Ⓓ Analog output
- Ⓔ Option (attachment)

Code	Description
Ⓐ Flow rate range	
150	0.5 to 15 L/min
600	2.0 to 60 L/min

Ⓑ Port size			
	Flow rate range	150	600
10*	3/8	●	
15*	1/2		●
20*	3/4		●

*** Thread**	
A	Rc thread
G	G thread
N	NPT thread

Ⓒ Switch output	
N	NPN transistor output
P	PNP transistor output

Ⓓ Analog output	
V	Voltage output (1 to 5 V)
A	Current output (4 to 20 mA)

Ⓔ Option (attachment)	
Blank	None
C3	Cable (M12/4-conductor/3 m) included
L3	L type cable (M12/4-conductor/3 m) included
B	Bracket included

(Note) Codes of attachments are not indicated in the product body model No. display section. For example, in the case of WFC-150-10A-NV-C3B
Product body (display): "WFC-150-10A-NV"
Cable (packaging display): "WFC-C3"
Bracket (packaging display): "WFC-B"
Of these three sets, "WFC-150-10A-NV-C3B" is displayed on the bag or box containing the entire package.

[Example of model No.]
WFC-150-10A-NV-C3B
- Ⓐ Flow rate range : 0.5 to 15 L/min
- Ⓑ Port size : Rc3/8
- Ⓒ Switch output : NPN transistor output
- Ⓓ Analog output : Voltage output (1 to 5 V)
- Ⓔ Option : Cable, bracket included

● Discrete option (cable, bracket) model No.

WFC - C3

Ⓔ Option

Operating ambient temperature range

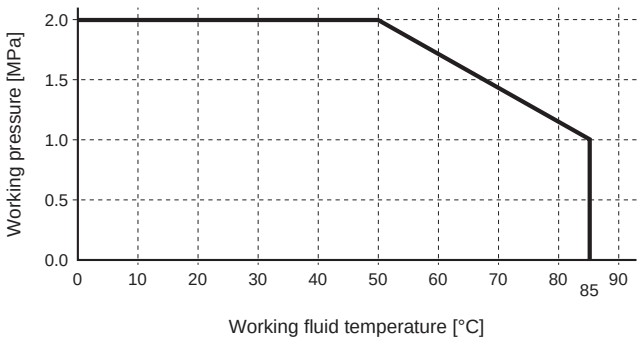

Internal structure diagram and parts list

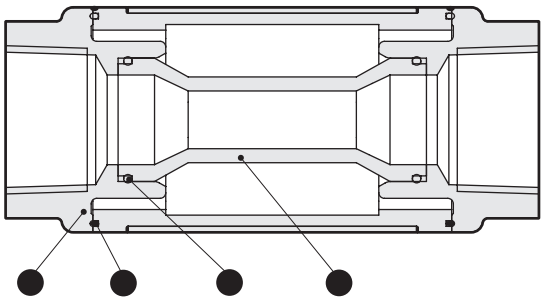

* Shows the internal structure when the display screen is in front.

No.	Part name	Material		Quantity
1	Socket	CAC804 or C6931	Brass	2
2	Packing	FKM	Fluoro rubber	2
3	O-ring	FKM	Fluoro rubber	2
4	Measuring tube	PPS resin		1

Dimensions

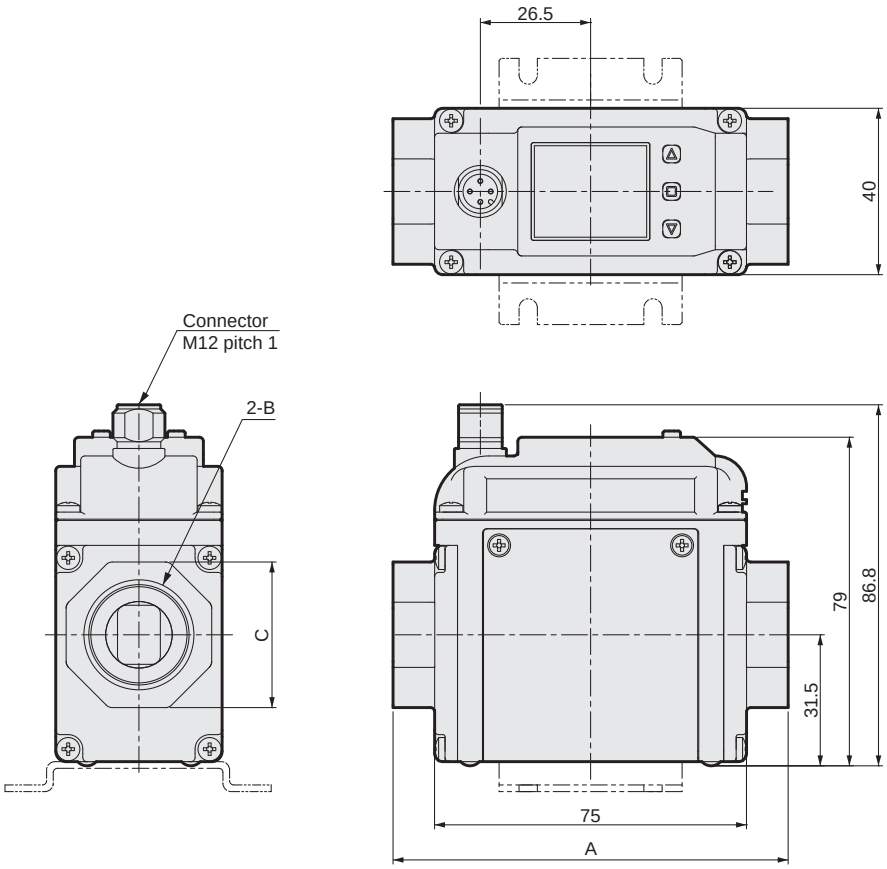

WFC-150-10A	90	Rc3/8	24
WFC-150-10G		G3/8	
WFC-150-10N		3/8NPT	
WFC-600-15A	95	Rc1/2	28
WFC-600-15G		G1/2	
WFC-600-15N		1/2NPT	
WFC-600-20A		Rc3/4	35
WFC-600-20G		G3/4	
WFC-600-20N		3/4NPT	

Optional dimensions

● Cable option

Discrete option model No: **WFC-C3**

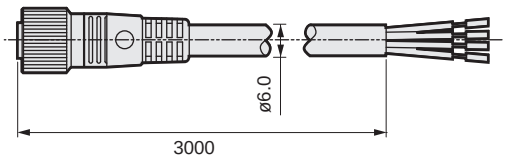

Discrete option model No: **WFC-B3**

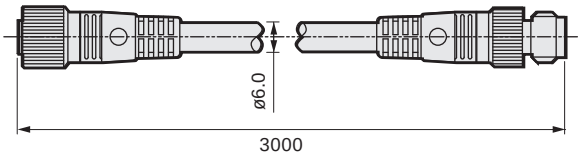

Discrete option model No: **WFC-L3**

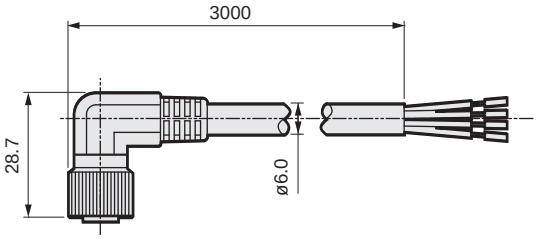

Discrete option model No: **WFC-G3**

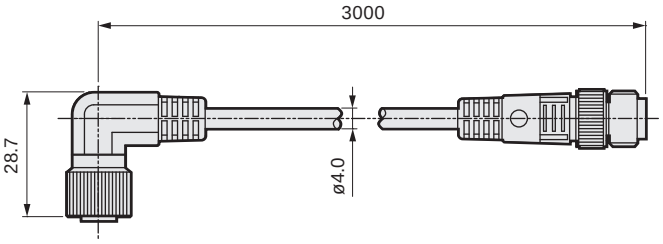

● Bracket option

Discrete option model No: **WFC-B**

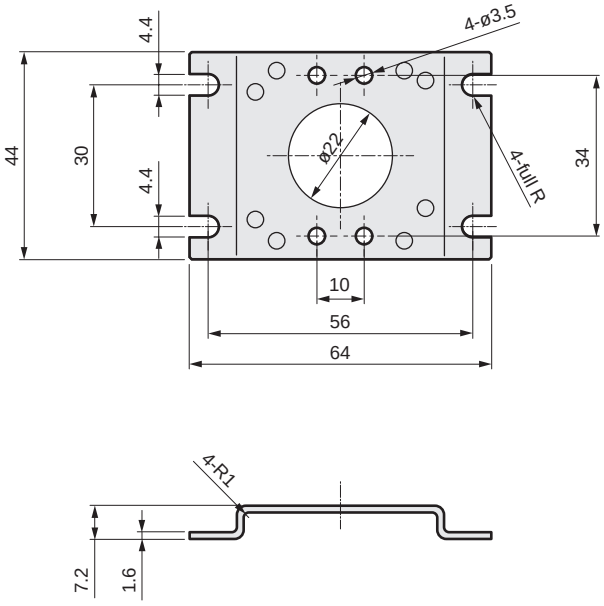

Wiring method

· Always read the safety precautions before wiring.

*Keep the cable far away from power cords or other things that may cause noise. Noise can cause malfunctions.

1) and 2) are used with the "Type with IO-Link and fluid temperature measurement function" wiring diagram, and 3) and 4) are used with the "Standard" wiring diagram.

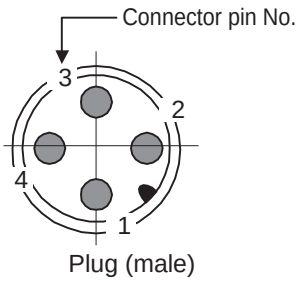

1) -C,-CT

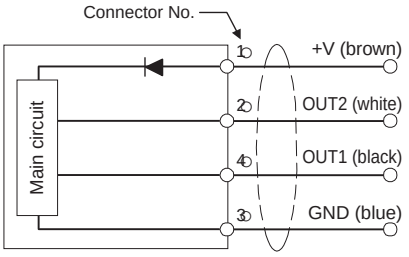

+V (brown)	: Connect to DC power supply plus [+]	: 20 to 30 VDC (when setting IO-Link) 24 VDC ±10% (when setting switch output)
OUT2 (white)	: Off. (When OUT1 is IO-Link) Analog output/switch input (When OUT1 is switch output)	: Voltage or current in proportion to flow rate or temperature (for -CT) is output/Remote zero adjustment or integration reset
OUT1 (black)	: IO-Link/switch output	: IO-Link communication/ MAX. 30 VDC 50 mA
GND (blue)	: Connect to [-] of DC power supply	: 0 VDC

2) -T

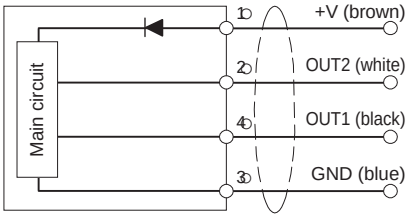

+V (brown)	: Connect to [+] of DC power supply	: 24 VDC ±10%
OUT2 (white)	: Analog output/switch input	: Voltage or current proportional to flow rate or temperature is output Remote zero adjustment or integration reset
OUT1 (black)	: Switch output	: Max. 30 VDC 50 mA
GND (blue)	: Connect to [-] of DC power supply	: 0 VDC

*With -C, -CT, and -T, the NPN/PNP of switch output can be switched from settings. The voltage/current of analog output can also be switched from settings.

3) -NV,-NA

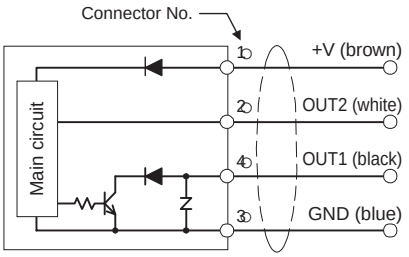

+V (brown)	: Connect to [+] of DC power supply	: 24 VDC ±10%
OUT2 (white)	: Analog output/switch input	: Voltage or current proportional to flow rate is output/ Remote zero adjustment or integration reset
OUT1 (black)	: Switch output (NPN)	: Max. 30 VDC 50 mA
GND (blue)	: Connect to [-] of DC power supply	: 0 VDC

4) -PV, -PA

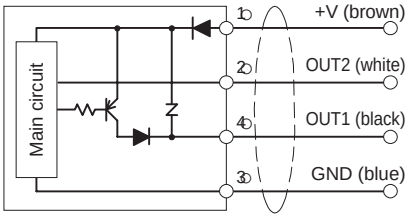

+V (brown)	: Connect to [+] of DC power supply	: 24 VDC ±10%
OUT2 (white)	: Analog output/switch input	: Voltage or current proportional to flow rate is output/ Remote zero adjustment or integration reset
OUT1 (black)	: Switch output (PNP)	: Max. 50 mA
GND (blue)	: Connect to [-] of DC power supply	: 0 VDC

*Wiring when cable option is mounted.

	Switch output	Analog output
-NV	NPN Transistor output	1 to 5 [V]
-NA		4 to 20 [mA]
-PV	PNP Transistor output	1 to 5 [V]
-PA		4 to 20 [mA]

Piping method

[Piping]

- Perform piping so that the flow path of the product is always full of water. If it is not full of water, a flow rate may be displayed even if the flow is halted.
- Perform zero adjustment operation after confirming that the flow path of the product is full of water and the flow is stationary.
- Do not allow gas to enter the piping.
- Though mounting orientation is unrestricted, display surface horizontal to the ground is recommended in lateral pull piping so as to be less susceptible to the influence of air bubbles.
- Set the flow direction for piping and flow rate sensor correctly.
- Provide flow rate adjusting valve, etc. on the downstream side of the sensor.

[Piping method]

Install with the flow direction from bottom to top

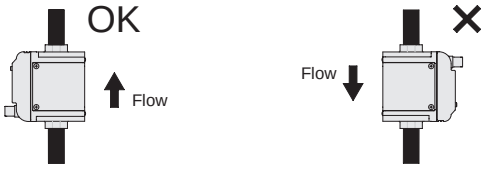

When the flow is from top to bottom
Route the downstream piping higher than the sensor position

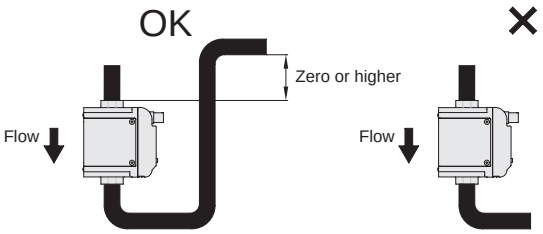

When the sensor downstream side is open to the atmosphere
Install the sensor below the discharge port

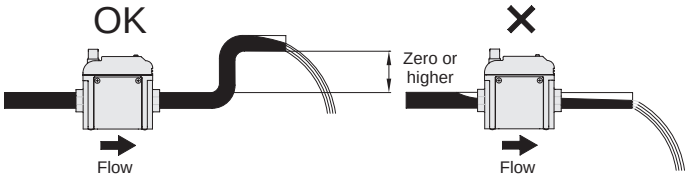

Mount the sensor in a position where air bubbles will not accumulate

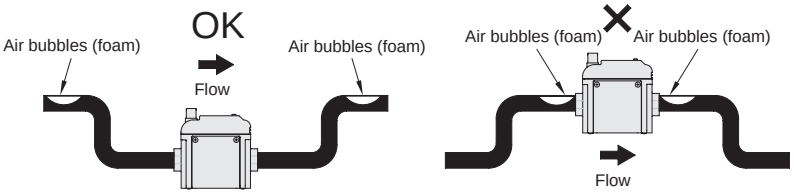

Install a flow control valve, etc., downstream of the sensor

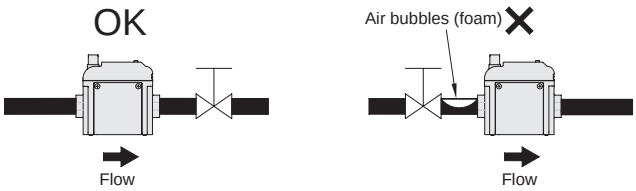

If the flow path may become empty due to reverse flow caused by water head pressure when water is stopped, installation of the check valve is recommended.

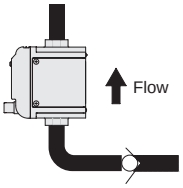

Use CKD's CCH Series check valve.

IO-Link parameter specifications

1. General

Item	Details
Communication protocol	IO-Link
Communication protocol version	V1.1
Transmission bit rate	COM2 (38.4 kbps)
Port	M12 Class A
Process data (input)	4-byte
Process data (output)	0-byte
Min. cycle time	5 ms
Data storage	1 kbyte
SIO mode support	None

2. Process data

Bit	31	30	29	28	27	26	25	24	23	22	21	20	19	18	17	16
Data name	MSB															LSB
	Instantaneous flow rate															
Data range	Refer to Table 1															
Format	UInteger16															

Bit	15	14	13	12	11	10	9	8	7	6	5	4	3	2	1	0
Data name	Error	WARNING	-	-	-	-	Switch output		MSB							LSB
							2	1	Fluid temperature							
Data range	True/False								-10 to 110°C							
Format	Boolean								Integer8							

Data range (Table 1)

Flow rate range	150	600
Data range	0.0 to 18.0 L/min	0.0 to 72.0 L/min

* IODD file can be downloaded from the CKD website. (https://www.ckd.co.jp/en/)

● Explanation of functions

Item	Explanation
Instantaneous flow rate	Instantaneous flow rate is sent to the master as cycle data.
Fluid temperature	Fluid temperature is sent to the master as cycle data.
Switch output function	The switch output operation function can be set. (Instantaneous flow rate, integrating flow, temperature)
Error notification	Errors and error details can be confirmed.
Peak hold function	The peak values of instantaneous flow rate and fluid temperature can be confirmed and reset.
Integrating flow	Integrating flow can be confirmed and reset.
Power ON time	Total power ON time can be confirmed. (Power ON time cannot be reset.)
Display setting	The display contents, colors, and vertical inversion of the main screen and sub screen can be changed.
Key lock	Button operations can be locked and unlocked.
Flow direction	Flow direction can be changed.
Integrating flow unit	Integrating flow unit can be changed.
Eco mode	ECO mode can be set to ON and OFF.
Parallel mode	Parallel mode can be set to ON and OFF.
Response time	Response time can be changed.
Optional characters	The optional characters to be displayed on the sub screen can be changed.
Low flow cut	The threshold at which the flow rate value becomes 0 can be set.
Zero adjustment	The zero point of flow rate can be set.
Reset function	The product can be returned to factory settings.
Data storage function	Set values can be uploaded to and downloaded from the master.
Unit identification function	Manufacturer, model No., serial No., and other information can be confirmed.

*Refer to the instruction manual for details on IO-Link parameter specifications.

Functions

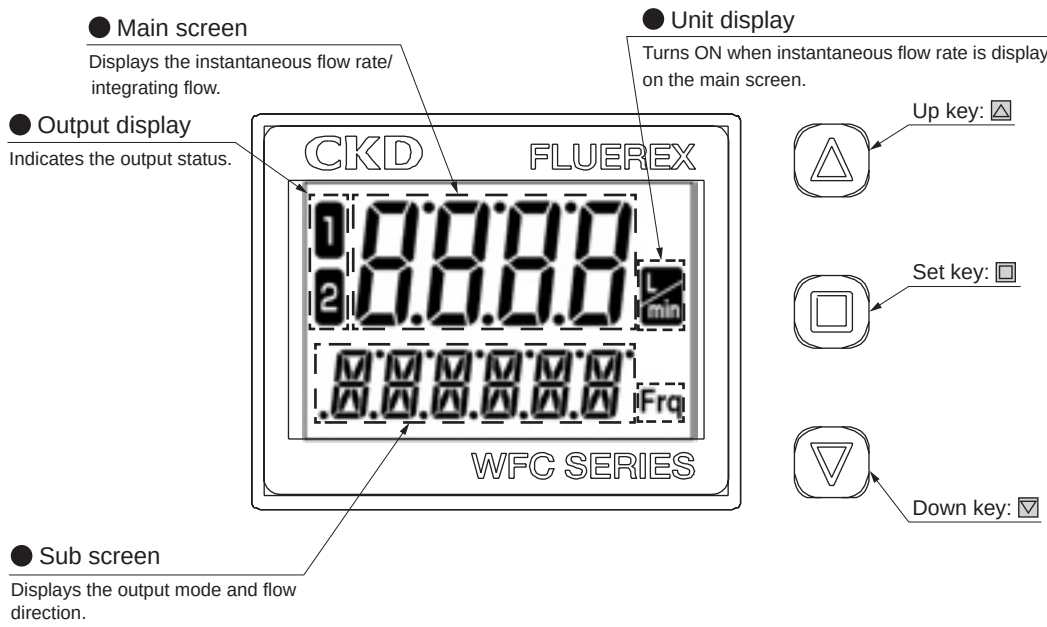

Measurement mode

[Normal screen]

Instantaneous flow rate display	Hysteresis mode 0.0 P1 5.0	Window comparator mode 0.0 WindoW	Integrated output mode 0.0 1234L	Integrated pulse output mode 0.0 0.0 IL/P
	Analog output (flow rate) 0.0 FS 10.0	Analog output (fluid temperature) 0.0 FS 10	Switch input: remote zero adjustment 0.0 ZERo	Digital input: Integration reset 0.0 RESEt
	Alarm output mode 0.0 ALARM	Fluid temperature 0.0 c 100	Frequency pulse output mode 0.0 FREQ-P	IO-Link communication mode 0.0 ioL iNK
	Flow direction 0.0 ---→	0.0 ←---	Select any character 0.0 ******	No sub-screen display 0.0
Total integrating flow display	8888 L	Integrated unit can be switched to "L", "kL", "ML" with up key: ▲ and down key: ▼.		

Output mode and output operation

(1) Hysteresis mode

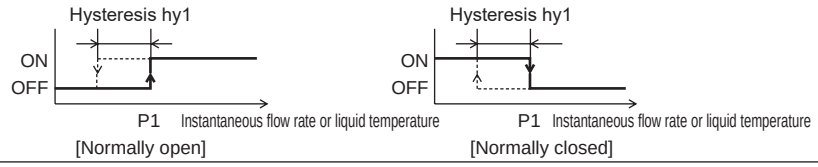

(2) Window comparator mode

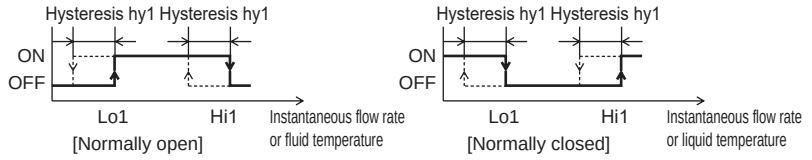

(3) Integrated output mode

● Increment mode

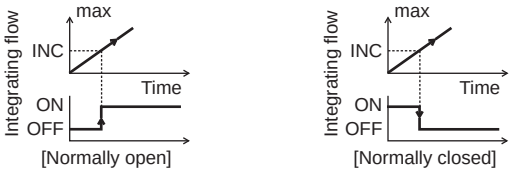

● Decrement mode

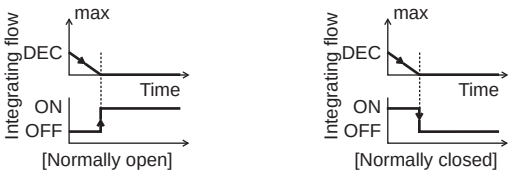

(4) Integrated pulse output



(5) Alarm output mode

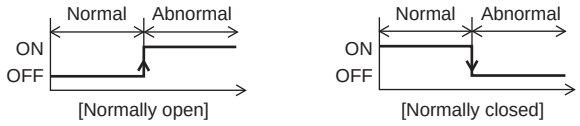

(6) Analog output mode

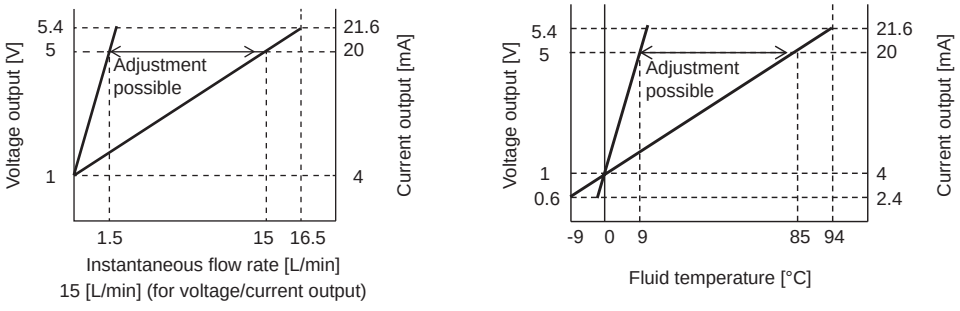

(7) Frequency pulse output mode

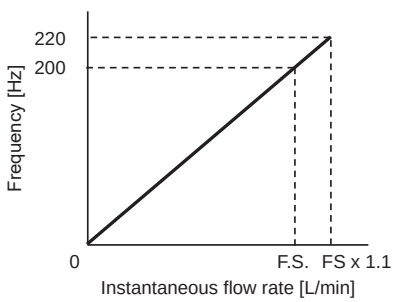

Easy setting (shortcut mode)

By shortcut operation, settings with high frequency of use can be moved from the normal screen to the settable state.

Main screen	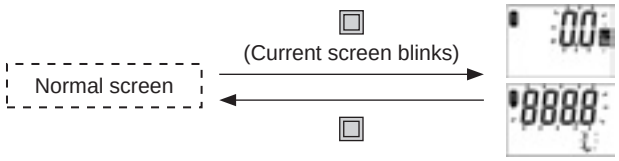 With △ or ▽, select “instantaneous value display” and "total integrated value display," and confirm with □.
Hysteresis mode	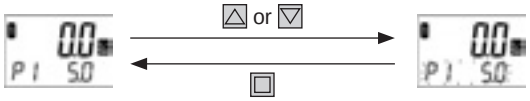 Set judgment value with △ or ▽, and confirm with □.
Integrated output mode	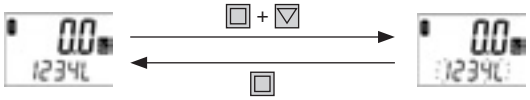 Integrated value is reset with □.
Analog output mode	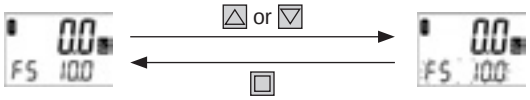 Change F.S. with △ or ▽, and confirm with □.
Flow direction	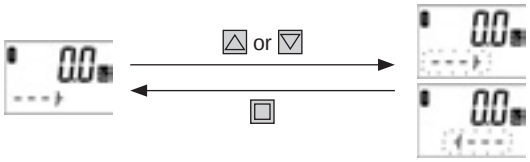 Change flow direction with △ or ▽, and confirm with □.
Total integrated value reset	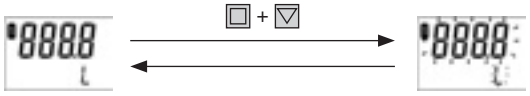 Reset with □. Cancel with △ or ▽ .
Setting key lock	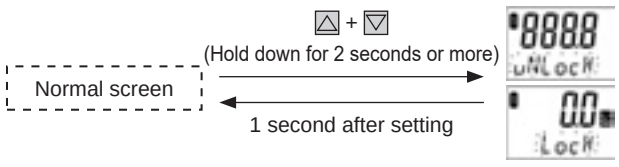 Change with △ or ▽, and confirm with □.

Water-use equipment

Safety Precautions

Be sure to read this section before use.
Refer to Intro Page 63 for general precautions.

Design/selection

⚠ CAUTION

- Do not exceed the product's specified range.
- This product is for fluids that do not corrode water/ wetted part materials with conductivity 5 µS/cm or more. Fluids with low conductivity cannot be detected normally.
- Do not use with a positive ground.
- Do not use for applications in direct contact with beverages/foodstuffs/chemical liquids, etc.
- Do not use in flammable gas atmospheres.
- Observe the working fluid temperature and if using at low temperatures, take freeze prevention measures such as adding antifreeze.
- Observe the working pressure range for use.
- Observe the rated flow range for use.
- This product cannot be used as a billing meter. Do not use this product for commercial transactions as it is not compliant with the Measurement Act. It cannot be calibrated, so use it as an industrial sensor.

Mounting, installation and adjustment

⚠ WARNING

- Perform piping so that the flow path of the product is always full of water. If it is not full of water, a flow rate may be displayed even if the flow is halted.
- Perform zero adjustment operation after confirming that the flow path of the product is full of water and the flow is stationary.

⚠ CAUTION

- There is a risk of electric shock on touching the electrical wiring connections.
- Always turn the power OFF before carrying out wiring. Never touch the live parts with wet hands.
- Do not allow gas to enter the piping.
- Change the settings after stopping the equipment.
- After the power supply is turned ON, there is a 10-second warm-up period. Do not use display/ output during this time.
- Do not press the setting switch with sharp objects.
- Do not install the product in locations where it is exposed to strong light such as direct sunlight or to radiant heat.
- Though mounting orientation is unrestricted, display surface horizontal to the ground is recommended in lateral pull piping so as to be less susceptible to the influence of air bubbles.
- Set the flow direction for piping and flow rate sensor correctly.
- Do not drop, bump or apply excessive impact. In addition, when handling, hold the body of the product. (Do not hold by the cables.)
- Do not install this product in places where it is exposed to strong compression/tensile strength/ load/vibration after installation.
- Do not use the product as footing or place any heavy objects on top of the product.
- The product may be damaged if excessive load is applied. Also, make sure that load from piping is not applied.
- Make sure that sealing tape or adhesive does not protrude from the port threads.
- Keep the piping just before the sensor as straight as possible and ensure that there are no parts that disturb the flow such as protrusion of packing.
- Provide flow rate adjusting valve, etc., on the downstream side of the sensor.
- If there is foreign matter/oil in the piping, clean before mounting the sensor.
- Incorrect wiring could cause failure.
- Confirm the color of the wire when wiring.
- It is recommended to electrically isolate the power supply and receiver from other points.
- Do not apply excessive tensile strength to the cable.
- Do not turn the L type cable. There is a risk of damage.
- Do not wire together with the power wire/power cables.
- This product should not be used in the vicinity of high voltage equipment or motors.
- Do not place strong magnets or magnetic fields close to this product.

Use/maintenance

⚠ CAUTION

- When a liquid ring circuit is formed, the pressure could rise due to changes in the temperature and the product may be damaged. Prevent a liquid ring circuit by providing a relief valve in the system.
- When fluid is not flowing, be sure to turn OFF the power of the product. If it remains energized in a state where fluid is not flowing, there is a risk of malfunction.
- Do not disassemble this product. Products reassembled after disassembly cannot meet the specifications.

Karman vortex flow rate sensor for water

WFK (FLUEREX flow sensor)

■ **Sensor/Controller Component/Flow rate sensor for water**

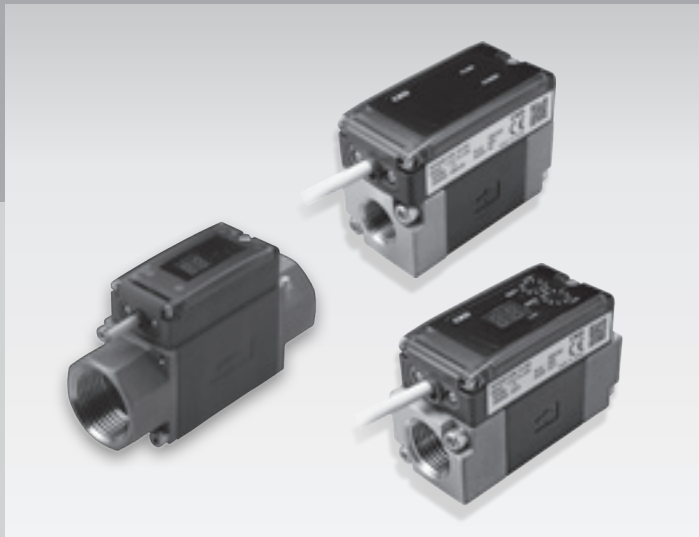

CONTENTS

Product introduction	1588
Wiring method	1590
● Compact/Component integrated (WFK3000)	1592
⚠Precautions for use	1600

Size and range for easy design

New large flow rate type compact flow rate sensor for water!

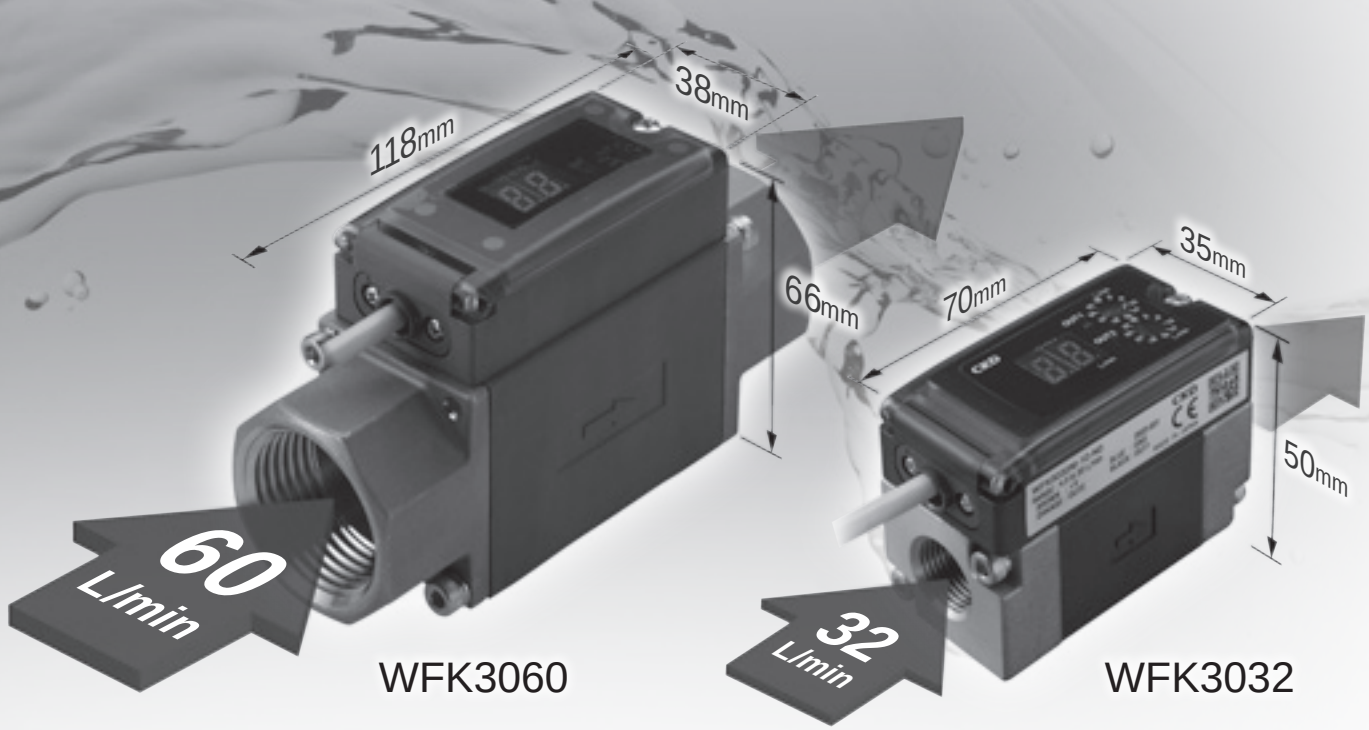

Karman vortex flow rate sensor for water FLUEREX

WFK3000 SERIES

Wide model variation

C type variations added

Model variations		Port size	Flow rate range (L/min)
WFK3000 S Series 1-point analog output	WFK3004S	Rc3/8 Rc1/2	0.5 – 4.0
	WFK3012S		1.5 – 12
	WFK3032S		4.0 – 32
	WFK3060S	Rc3/4 Rc1	8.0 – 60
WFK3000 M Series Switch 2-point output	WFK3004M	Rc3/8 Rc1/2	0.5 – 4.0
	WFK3012M		1.5 – 12
	WFK3032M		4.0 – 32
	WFK3060M	Rc3/4 Rc1	8.0 – 60
WFK3000 C Series 1-point analog output Switch 1-point output	WFK3004C	Rc3/8 Rc1/2	0.5 – 4.0
	WFK3012C		1.5 – 12
	WFK3032C		4.0 – 32
	WFK3060C	Rc3/4 Rc1	8.0 – 60

User's Manual-free easy operation

Sensor is ready for use as soon as wiring is completed.
Setting of switch is completed by simply turning the rotary switch.
Cumbersome switch setting not required.

Analog/ Switch dual output supported

WFK3000S
Sensor type: analog 1-point output



Power supply lamp
Water conduction lamp

WFK3000M
Switch type: Switch 2-point output



Output lamp
Rotary switch
(set output in 10 steps.)
Instantaneous flow rate display
(integer part will be displayed for 10 L/ min and over.)

WFK3000C
Sensor/switch type:
Analog 1-point, switch 1-point output



Rotary switch
Output lamp
Instantaneous flow rate display
(integer part will be displayed for 10 L/min and over.)

Measuring method with high reliability

Highly reliable Karman's vortex used. As it has no moving parts, unlike an impeller, problems such as foreign materials and rust in piping are eliminated.

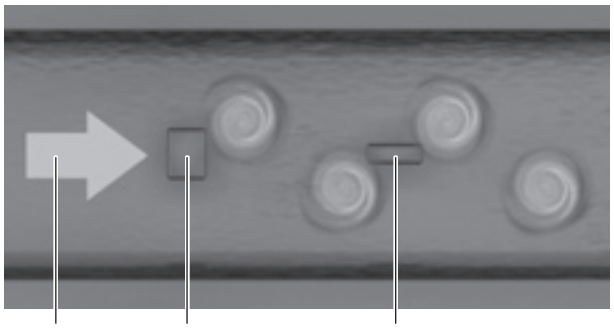

Flow
Vortex generator
Detector

Degree of protection IP65 or equivalent

Safe to use in food equipment or similar equipment that requires drip-proofing.

Examples of applications

Semiconductor Semiconductor manufacturing equipment

Cooling and temperature control of semiconductor manufacturing equipment. Etching, grinder, dicer, CVD.

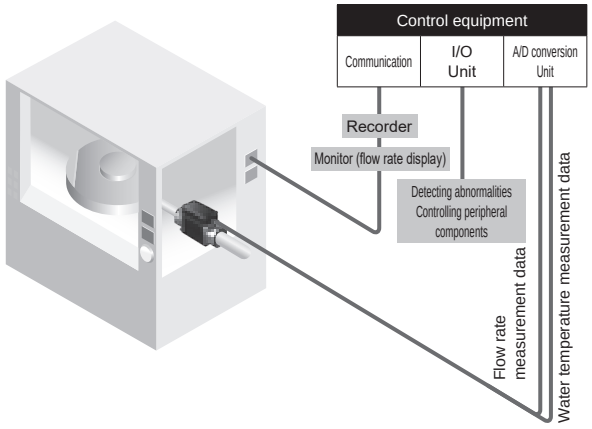

Hardening Induction hardening device

Quantitative management of cooling water.

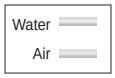

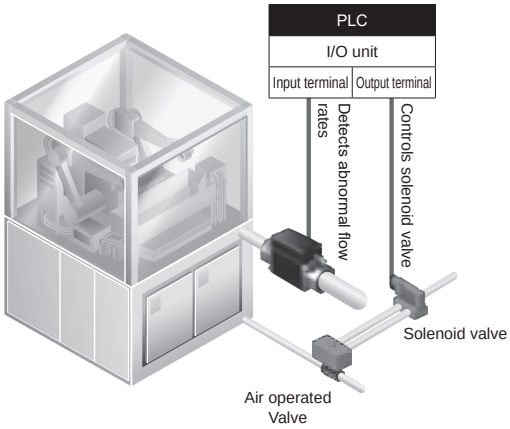

Wiring method

- Always read the safety precautions before wiring.
- 4-conductor cabtyre cable 0.2 mm² is used.
- Option

Sensor (analog output) Switch (switch output)

-A0; (0-5[V]) -N0; (NPN a-contact, 2 points)
-A1; (4-20[mA]) -N1; (NPN b-contact, 2 points)
-A2; (1-5[V]) -P0; (PNP a-contact, 2 points)
-A3; (0-10[V]) -P1; (PNP b-contact, 2 points)
* There is one point for sensor/switch alarm output.

● WFK3***S (sensor voltage output: -A0/-A2/-A3)

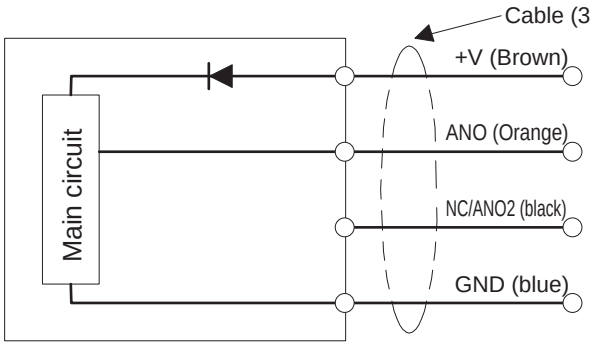

: DC power supply plus [+]: 12 to 24 VDC±10%
(Option A3 is 15 to 24 VDC±10%)

: Analog output: Voltage in proportion to flow rate is output

: Standard: NC/

: Connect to [-] of DC power supply: 0 VDC

● WFK3***S (sensor current output: -A1)

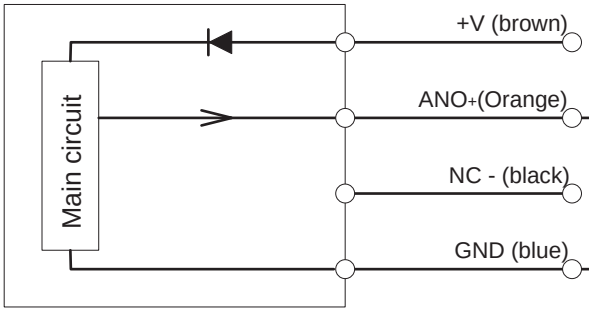

: DC power supply plus [+]: 12 to 24 VDC±10%

: Connect to 4 to 20 mA input unitunit

: Connect to [-] of DC power supply: 0 VDC

* For products purchased before February 2020 of WFK3004, 3012, 3032, the wiring method is as follows.

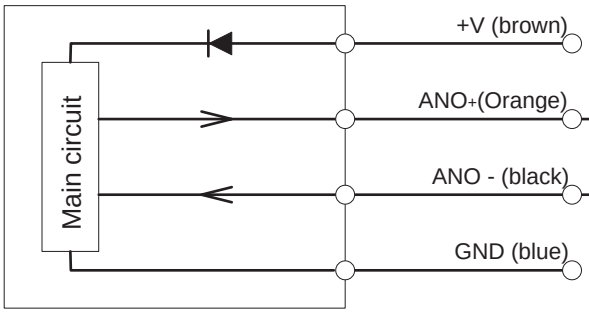

: DC power supply plus [+]: 12 to 24 VDC±10%

: Connect to 4 to 20 mA input unitunit

: Connect to [-] of DC power supply: 0 VDC

* Note
When connecting two or more flow rate sensors to the upper-level input circuit (receiver), carefully prevent signal interference.

● WFK3***M (Switch NPN output: -N0/-N1)

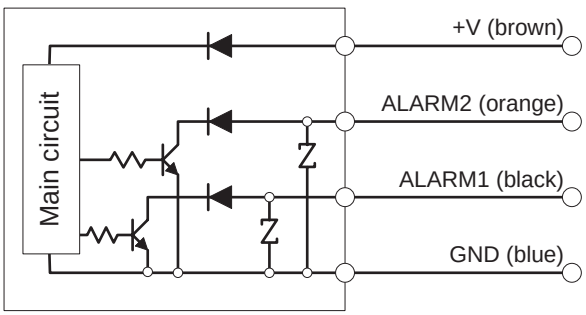

: Connect to [+] of DC power supply : 12 to 24 VDC ± 10%

: Switch 2 (OUT2) output : MAX 30 VDC/50 mA

: Switch 1 (OUT1) output : MAX 30 VDC/50 mA

: Connect to [-] of DC power supply : 0 VDC

● WFK3***M (Switch PNP output: -P0, -P1)

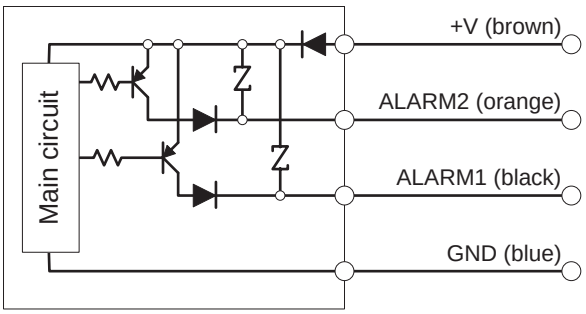

: Connect to [+] of DC power supply : 12 to 24 VDC ± 10%
: Switch 2 (OUT2) output : MAX 50 mA
: Switch 1 (OUT1) output : MAX 50 mA
: Connect to [-] of DC power supply : 0 VDC

● WFK3***C (sensor voltage output: -A0, -A2, -A3, switch type NPN output specifications: N0/N1)

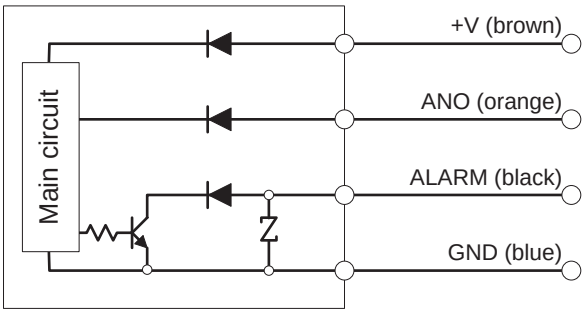

: Connect to [+] of DC power supply: 12 to 24 VDC ± 10%
(Option A3: 15 to 24 VDC ±10%)
: Analog output : Voltage in proportion to flow rate is output
: Switch (OUT) output : MAX 30 VDC/50 mA
: Connect to [-] of DC power supply : 0 VDC

● WFK3***C (sensor current output specifications: -A1, switch type NPN output specifications (N0, N1)

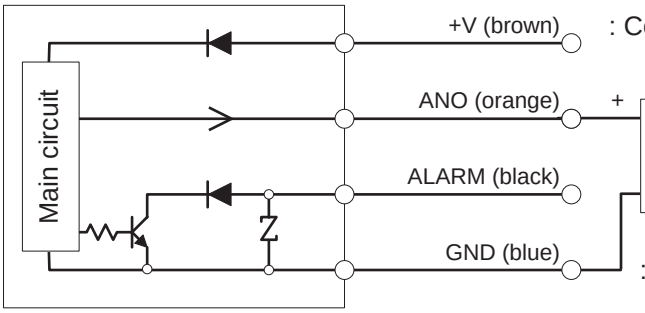

: Connect to [+] of DC power supply : 12 to 24 VDC ± 10%
: Connect to 4 to 20 mA input unit
: Switch (OUT) output
: MAX 30 VDC/50 mA
: Connect to [-] of DC power supply : 0 VDC

● WFK3***C (sensor type voltage output specifications: -A0/-A2/-A3, switch type PNP output specifications: P0,P1)

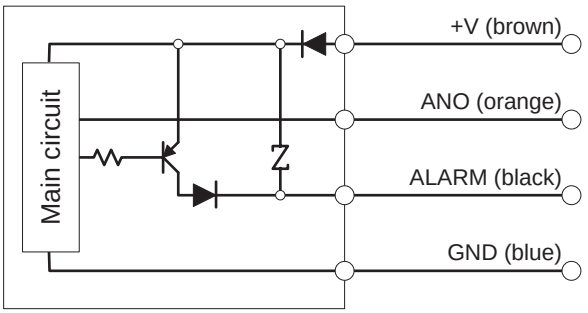

: Connect to [+] of DC power supply : 12 to 24 VDC ± 10%
(Option A3: 15 to 24 VDC ±10%)
: Analog output : Voltage in proportion to flow rate is output
: Switch (OUT) output : MAX 30 VDC/50 mA
: Connect to [-] of DC power supply : 0 VDC

● WFK3***C (sensor voltage output: -A1, switch type PNP output specifications: P0/P1)

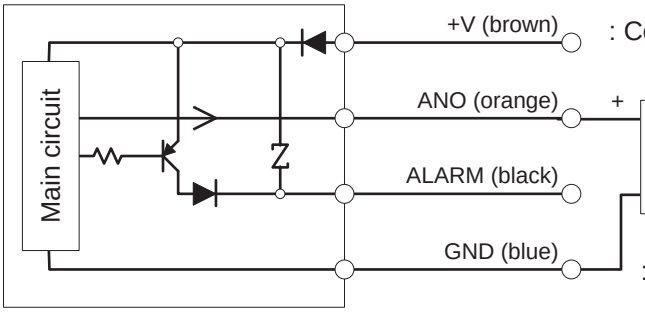

: Connect to [+] of DC power supply : 12 to 24 VDC ± 10%
: Connect to 4 to 20 mA input unit
: Switch (OUT) output
: MAX 30 VDC/50 mA
: Connect to [-] of DC power supply : 0 VDC



FLUEREX flow sensor

WFK3000S Series

(Compact/equipment integrated sensor)

Specifications

Model No. / Item		WFK3004S-10	WFK3004S-15	WFK3012S-10	WFK3012S-15	WFK3032S-10	WFK3032S-15	WFK3060S-20	WFK3060S-25
Flow rate range L/min		0.5 to 4.0		1.5 to 12		4.0 to 32		8.0 to 60	
Port size Rc		3/8	1/2	3/8	1/2	3/8	1/2	3/4	1
Port material		Stainless steel: SCS13							
Working conditions	Applicable fluid	Pure water, industrial water							
	Max. working pressure MPa	1.0							
	Proof pressure MPa	1.5							
	Ambient temperature °C	0 to 50 (85%RH or less)							
	Fluid temperature °C	1 to 70							
Accuracy		±2.5% F.S.							
Temperature characteristics		±5% F.S.(10 to 50°C, base temperature 20°C)							
Pressure loss MPa		0.06 or less (at 4.0 L/min)		0.05 or less (at 12 L/min)		0.06 or less (at 32 L/min)		0.05 or less (at 60 L/min)	
Response time		1 sec (*1)							
Output	Display	No							
	Analog output	Standard: 0 to 5 VDC/option: 4 to 20 mADC, 1 to 5 V, 0 to 10 V							
Power supply voltage		12 to 24 VDC ±10% (MAX 80 mA) Option A3 is 15 to 24 VDC							
Cable		3 m, 4-conductor, finished O.D. 4.8mm, core wire 0.2mm^2, insulator O.D. 1.3mm							
Mounting	Mounting orientation	Vertical/Unrestricted lateral							
	Straight piping section	Without (*2)						IN side: 10 D, OUT side 5 D	
	Degree of protection	IP 65 or equiv.							
Weight g		380	410	380	410	380	410	470	510
Bracket weight g		28 (including screws)							

*1: The time to attain 70% of the original output after the normal flow rate (used) drops instantly to 0.

*2: Installing straight pipes (10D on the IN side and 5D on the OUT side) is recommended so that the piping conditions do not affect the performance.

Analog output

-A0 (load 50 kΩ or more)	-A1 (load 500 Ω or less)	-A2 (load 50 kΩ or more)	-A3 (load 50 kΩ or more)
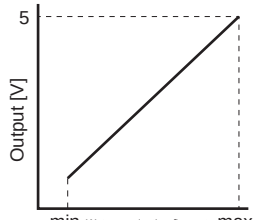	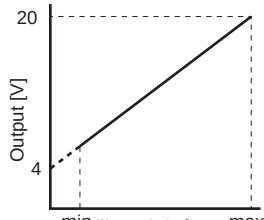	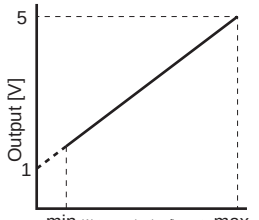	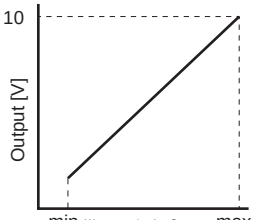

* min. is the minimum value and max. is the maximum value in the flow rate range.

Functions

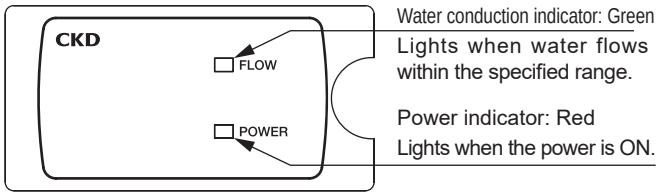

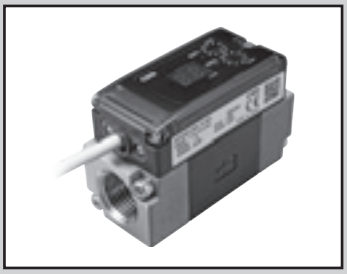

FLUEREX flow sensor

WFK3000M Series

(Compact/equipment integrated switch)

Specifications

Model No. / Item			WFK3004M-10	WFK3004M-15	WFK3012M-10	WFK3012M-15	WFK3032M-10	WFK3032M-15	WFK3060M-20	WFK3060M-25
Flow rate range L/min			0.5 to 4.0		1.5 to 12		4.0 to 32		8.0 to 60	
Port size Rc			3/8	1/2	3/8	1/2	3/8	1/2	3/4	1
Port material			Stainless steel: SCS13							
Working conditions	Applicable fluid		Pure water, industrial water							
	Max. working pressure MPa		1.0							
	Proof pressure MPa		1.5							
	Ambient temperature °C		0 to 50 (85%RH or less)							
	Fluid temperature °C		1 to 70							
Accuracy			±2.5% F.S. ±1 digit (1 digit = 0.1 L/min (less than 10 L/min), 1 L/min (10 L/min and over))							
Temperature characteristics			± 5% F.S. (10 to 50°C, base temperature 20°C)							
Pressure loss MPa			0.06 or less (at 4.0 L/min)		0.05 or less (at 12 L/min)		0.06 or less (at 32 L/min)		0.05 or less (at 60 L/min)	
Response time			1 sec (*1)							
Output	Display		Instantaneous flow rate 2-digit LED display							
	Switch output	Number of points	2PointTransistor output (NPN/PNP Selection)							
		Rating	MAX.DC50mA							
		Internal voltage drop	(NPN) 2.0 V or less (PNP) 2.5 V or less							
Power supply voltage			12 to 24 VDC ±10% (MAX 80 mA)							
Cable			3 m, 4-conductor, finished O.D. 4.8mm, core wire 0.2mm², insulator O.D. 1.3mm							
Mounting	Mounting orientation		Unrestricted in vertical/horizontal direction							
	Straight piping section		Without (*2)						IN side: 10D, OUT side: 5D	
	Degree of protection		IP 65 or equiv.							
Weight g			380	410	380	410	380	410	470	510
Bracket weight g			28 (including screws)							

*1: When the switch output is set to 70% of the normal flow rate (used), the time until the switch output occurs after the flow rate drops instantly to 0.
*2: Installing straight pipes (10D on the IN side and 5D on the OUT side) is recommended so that the piping conditions do not affect the performance.

Functions

· 2-digit digital display
Displays the instantaneous flow rate.
* Less than 10 L/min: Decimal fraction displayed
10 L/min and over: Integer displayed

• Rotary switch for output setting

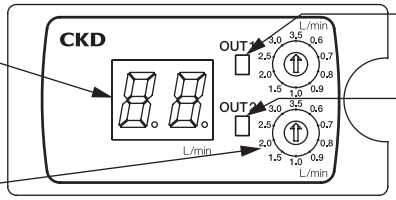

· Output lamp: Green (OUT1)
Lights when switch output is ON.

· Output lamp: Red (OUT2)
Lights when switch output is ON.

* OUT1: Lead wire (black)
OUT2: Lead wire (orange) supported

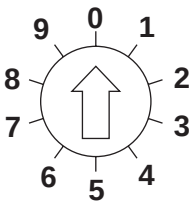

Allows you to set the switch output setting in 10 steps.
* Set the rotary switch with a precision screwdriver, etc. Be extremely careful, since applying excessive force to the rotating part may result in contact failure.
* Be sure to align the arrow with the scale mark. If it is forcibly set at an intermediate point, the output may become unstable.
* Turn power OFF before setting switch output.
* Close the cover after setting switch output to display the set flow rate.

Switch output set value [L/min]

Rotary switch contact number	Model			
	WFK3004M	WFK3012M	WFK3032M	WFK3060M
1	0.6	2.0	5.0	10
2	0.7	3.0	9.0	15
3	0.8	4.0	12	20
4	0.9	5.0	14	25
5	1.0	6.0	16	30
6	1.5	7.0	18	35
7	2.0	8.0	21	40
8	2.5	9.0	24	45
9	3.0	10	27	50
0	3.5	11	30	55
Hysteresis	0.1	0.5	1.0	3.0

Switch output operation

[Output option: NO/PO]

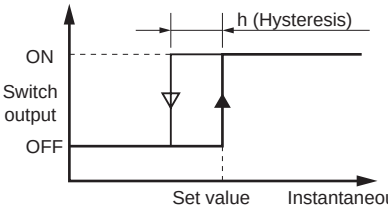

[Output option: N1/P1]

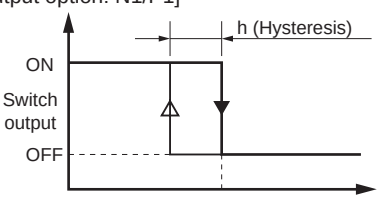



FLUEREX flow sensor

WFK3000C Series

(Compact/equipment integrated sensor/switch)

Specifications

Model No. / Item			WFK3004C-10	WFK3004C-15	WFK3012C-10	WFK3012C-15	WFK3032C-10	WFK3032C-15	WFK3060C-20	WFK3060C-25
Flow rate range L/min			0.5 to 4.0		1.5 to 12		4.0 to 32		8.0 to 60	
Port size Rc			3/8	1/2	3/8	1/2	3/8	1/2	3/4	1
Port material			Stainless steel: SCS13							
Working conditions	Applicable fluid		Pure water, industrial water							
	Max. working pressure MPa		1.0							
	Proof pressure MPa		1.5							
	Ambient temperature °C		0 to 50 (85% RH or less)							
	Fluid temperature °C		1 to 70							
Accuracy			±2.5% F.S. ±1 digit (1digit = 0.1 L/min (less than 10 L/min), 1 L/min (10 L/min and over))							
Temperature characteristics			± 5% F.S. (10 to 50°C, base temperature 20°C)							
Pressure loss MPa			0.06 or less (at 4.0L/min)		0.05 or less (at 12L/min)		0.06 or less (at 32L/min)		0.05 or less (at 60L/min)	
Response time			1 sec (*1)							
Output	Display		Instantaneous flow rate 2-digit LED display							
	Analog output		Standard: 0 to 5 VDC/Option: 4 to 20mA, 1 to 5VDC, 0 to 10VDC							
	Switch output	Number of points	1-point transistor output (select NPN/PNP)							
		Rating	MAX.DC50mA							
		Internal voltage drop	(NPN) 2.0 V or less (PNP) 2.5 V or less							
Power supply voltage			12 to 24 VDC ±10% (MAX 80 mA) Option A3 is 15 to 24 VDC							
Cable			3 m, 4-conductor, finished O.D. 4.8mm, core wire 0.2mm^2, insulator O.D. 1.3mm							
Mounting	Mounting orientation		Unrestricted in vertical/horizontal direction							
	Straight piping section		Without (*2)						IN side: 10D, OUT side: 5D	
	Degree of protection		IP 65 or equiv.							
Weight g			380	410	380	410	380	410	470	510
Bracket weight g			28 (including screws)							

*1: When the switch output is set to 70% of the normal flow rate (used), the time until the switch output occurs after the flow rate drops instantly to 0.
*2: Installing straight pipes (10D on the IN side and 5D on the OUT side) is recommended so that the piping conditions do not affect the performance.

Functions

· 2-digit digital displaydisplay
Displays the instantaneous flow rate.
*Less than 10 L/min: Decimal displayed, 10 L/min and over: Integer displayed

• Rotary switch for output setting

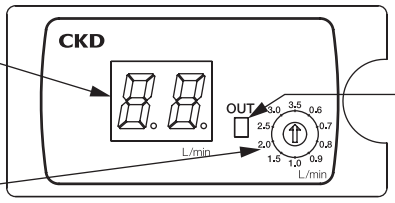

• Output lamp: Orange (OUT)
Lights when switch output is ON.

*OUT: Lead wire(Black)is supported by T6C0/1.

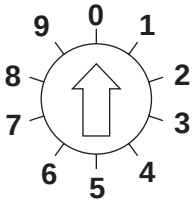

Allows you to set the switch output setting in 10 steps.
* Use a precision screwdriver or similar tool to set the rotary switch. Be extremely careful, since applying excessive force to the rotating part may result in contact failure.
* Be sure to align the arrow with the scale mark. If it is forcibly set at an intermediate point, the output may become unstable.
* Turn OFF the power before setting the switch output.
* After switch output setting, close the cover to display the set flow rate it will be .

Switch output setting value [L/min]

Rotary switch contact number	Model			
	WFK3004C	WFK3012C	WFK3032C	WFK3060C
1	0.6	2.0	5.0	10
2	0.7	3.0	9.0	15
3	0.8	4.0	12	20
4	0.9	5.0	14	25
5	1.0	6.0	16	30
6	1.5	7.0	18	35
7	2.0	8.0	21	40
8	2.5	9.0	24	45
9	3.0	10	27	50
0	3.5	11	30	55
Hysteresis	0.1	0.5	1.0	3.0

Switch output operation

[Output option: NO/PO]

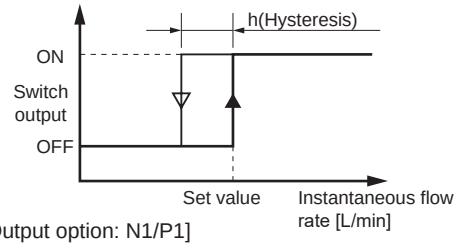

[Output option: N1/P1]

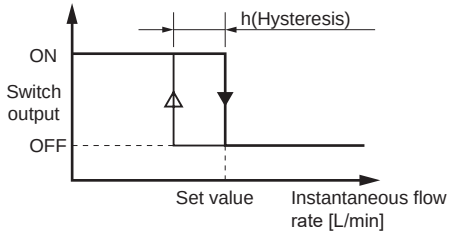

Pressure loss

● WFK3004

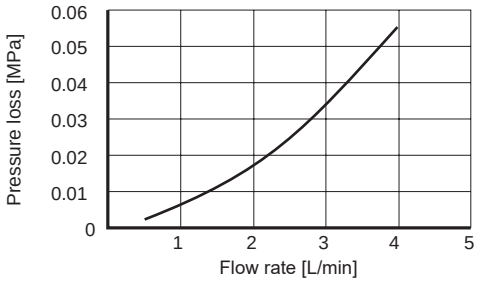

● WFK3012

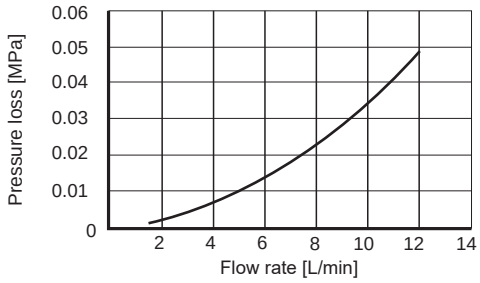

● WFK3032

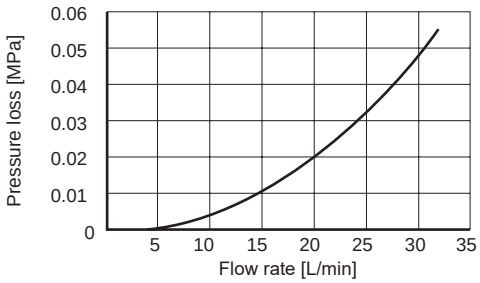

● WFK3060

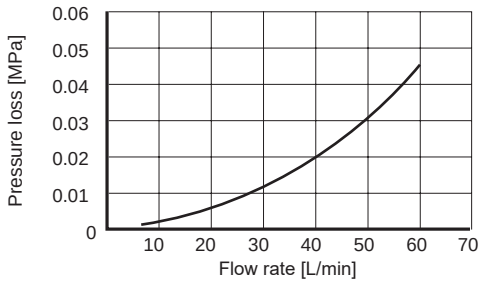

How to order (Set model No.)

● Sensor

WFK 3 012 S- 10 - A0 B

- A Shape
- B Flow rate range
- C Port size
- D Analog output
- E Bracket

Code	Description
A Shape	
3	Compact for equipment integration

B Flow rate range	
004	0.5 to 4.0 L/min
012	1.5 to 12 L/min
032	4.0 to 32 L/min
060	8.0 to 60 L/min

C Port size					
	Flow rate range	004	012	032	060
10	Rc3/8	●	●	●	-
15	Rc1/2	●	●	●	-
20	Rc3/4	-	-	-	●
25	Rc1	-	-	-	●

D Analog output	
A0	0 to 5 VDC
A1	4 to 20 mADC
A2	1 to 5 VDC
A3	0 to 10 VDC

E Bracket	
Blank	None
B	Bracket included (including mounting screws)

*1: Contact CKD for G thread and NPT thread support.

[Example of model No.]
WFK3004S-10-A0

- A Shape : Compact for equipment integration
- B Flow rate range : 0.5 to 4 L/min
- C Port size : Rc3/8
- D Analog output : 0 to 5 VDC
- E Bracket : None

● Switch type

WFK 3 012 M- 10 - N0 B

- A Shape
- B Flow rate range
- C Port size
- D Alarm output model
- E Bracket

Code	Description
A Shape	
3	Compact for equipment integration

B Flow rate range	
004	0.5 to 4.0 L/min
012	1.5 to 12 L/min
032	4.0 to 32 L/min
060	8.0 to 60 L/min

C Port size					
	Flow rate range	004	012	032	060
10	Rc3/8	●	●	●	-
15	Rc1/2	●	●	●	-
20	Rc3/4	-	-	-	●
25	Rc1	-	-	-	●

D Alarm output model	
N0	NPN transistor output, 2 points (a contact)
N1	NPN transistor output, 2 points (b contact)
P0	PNP transistor output, 2 points (a contact)
P1	PNP transistor output, 2 points (b contact)

E Bracket	
Blank	None
B	Bracket included (including mounting screws)

*1: Contact CKD for G thread and NPT thread support.

[Example of model No.]
WFK3012M-15-N1B

- A Shape : Compact for equipment integration
- B Flow rate range : 1.5 to 12 L/min
- C Port size : Rc1/2
- D Alarm output : NPN 2 output points (b contact)
- E Bracket : Included

How to order

● Sensor/switch

WFK 3 004 C- 10 - A0 N0 B

Ⓐ Shape
Ⓑ Flow rate range
Ⓒ Port size
Ⓓ Analog output
Ⓔ Alarm output
Ⓕ Bracket

Code	Description
Ⓐ Shape	
3	Compact for equipment integration
Ⓑ Flow rate range	
004	0.5 to 4.0 L/min
012	1.5 to 12 L/min
032	4.0 to 32 L/min
060	8.0 to 60 L/min

Ⓒ Port size

	Flow rate range	004	012	032	060
10	Rc3/8	●	●	●	—
15	Rc1/2	●	●	●	—
20	Rc3/4	—	—	—	●
25	Rc1	—	—	—	●

Ⓓ Analog output	
A0	0 to 5 VDC
A1	4 to 20 mADC
A2	1 to 5 VDC
A3	0 to 10 VDC

Ⓔ Alarm output	
N0	NPN transistor output, 1 points (a contact)
N1	NPN transistor output, 1 points (b contact)
P0	PNP transistor output, 1 points (a contact)
P1	PNP transistor output, 1 points (b contact)

Ⓕ Bracket	
Blank	None
B	Bracket attached (including mounting screws)

*1: Contact CKD for G thread and NPT thread information.

[Example of model No.]
WFK3004C-10-A0N0B

Ⓐ Shape: Compact for equipment integration
Ⓑ Flow rate range: 0.5 to 4L/min
Ⓒ Port size: Rc3/8
Ⓓ Analog output: DC0 to 5V
Ⓔ Alarm output: NPN1 points (a contact)
Ⓕ Bracket: included

Internal structure and parts list

● WFK3004□, WFK3012□, WFK3032□

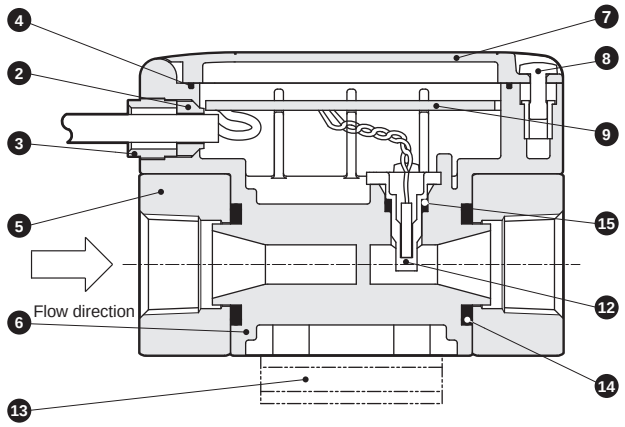

● WFK3060□

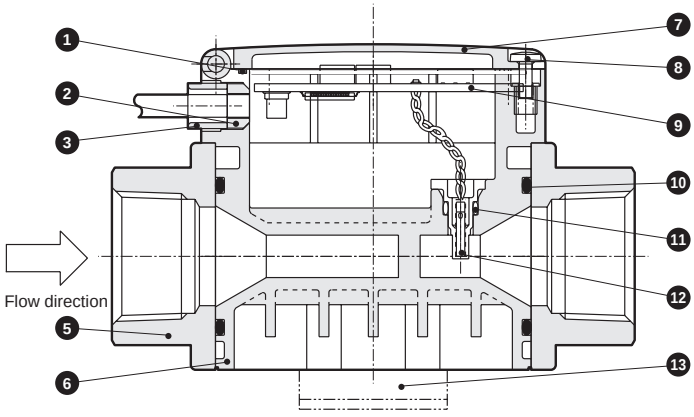

Cannot be disassembled

No.	Part name	Material		Quantity	No.	Part name	Material		Quantity
1	Cover packing	NBR	Nitrile rubber	1	9	Wiring section			1
2	Cable packing	NBR	Nitrile rubber	1	10	O-ring	NBR	Nitrile rubber	2
3	Cable gland	PPS resin		1	11	O-ring	NBR	Nitrile rubber	1
4	Cover packing	FKM	Fluoro rubber	1	12	Karman's vortex street detection sensor	PPS resin (interior: piezo ceramic)		1
5	Attachment	SCS13	Stainless steel casting	2	13	Bracket (option)	SPC	Steel	(1)
6	Body	PPS resin		1				Zinc plated	
7	Cover	PC resin		1	14	O-ring	FKM	Fluoro rubber	2
8	Screw for cover			1	15	O-ring	FKM	Fluoro rubber	1

* Wetted parts are ⑤, ⑥, ⑩, ⑪, ⑫ , ⑭ and ⑮.

Dimensions

● WFK3004□, WFK3012□, WFK3032□

• Port size: 10 (Rc 3/8)

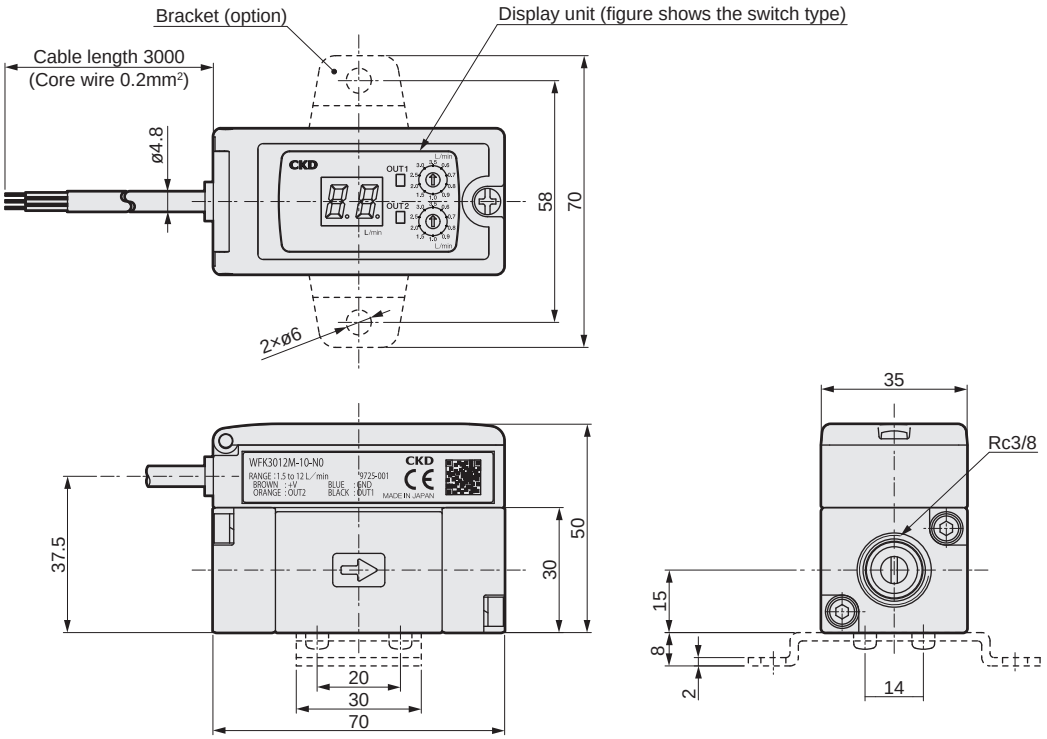

• Port size: 15 (Rc 1/2)

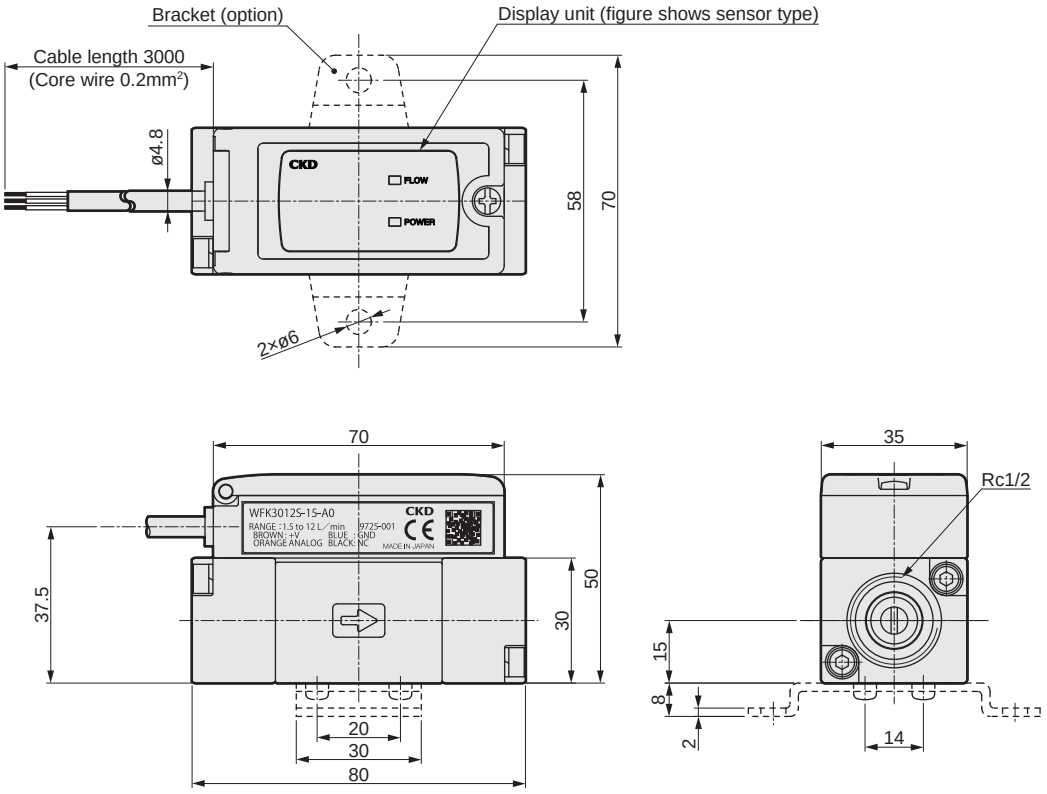

Dimensions

● WFK3060□

· Port size: 20 (Rc3/4)

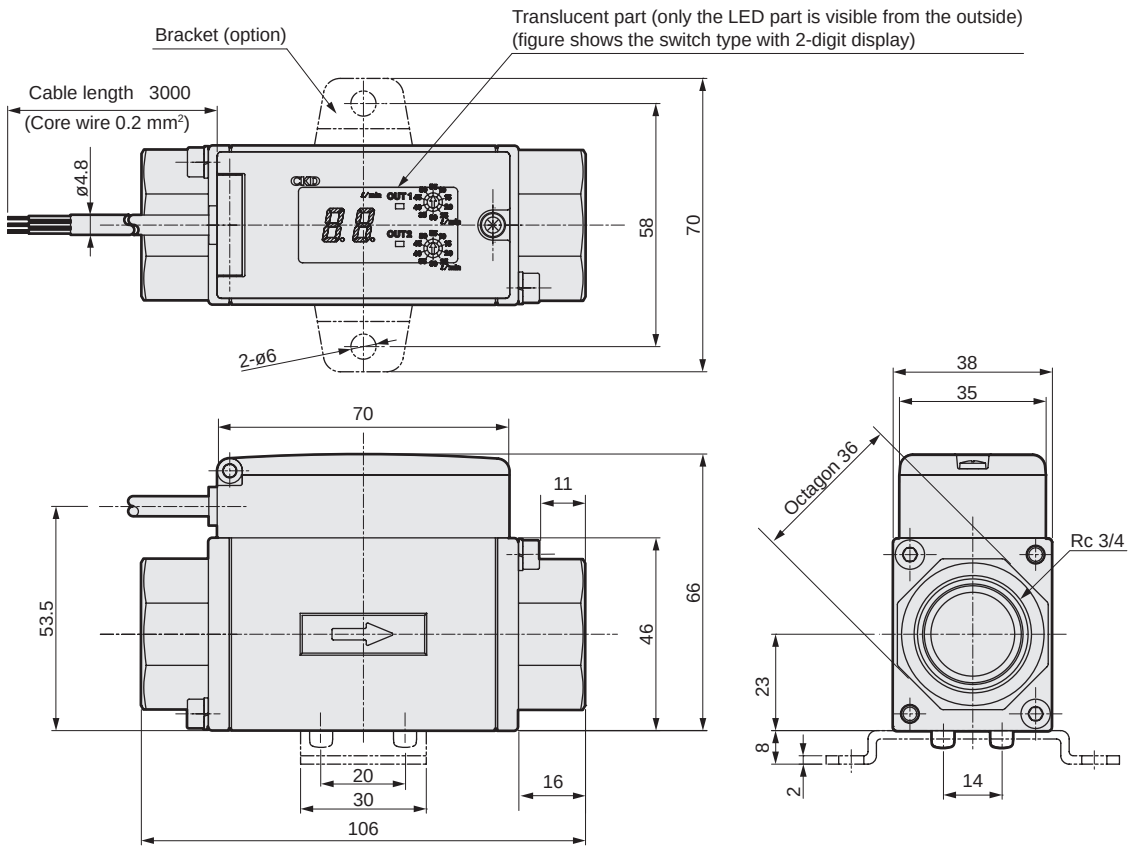

· Port size: 25 (Rc¹)

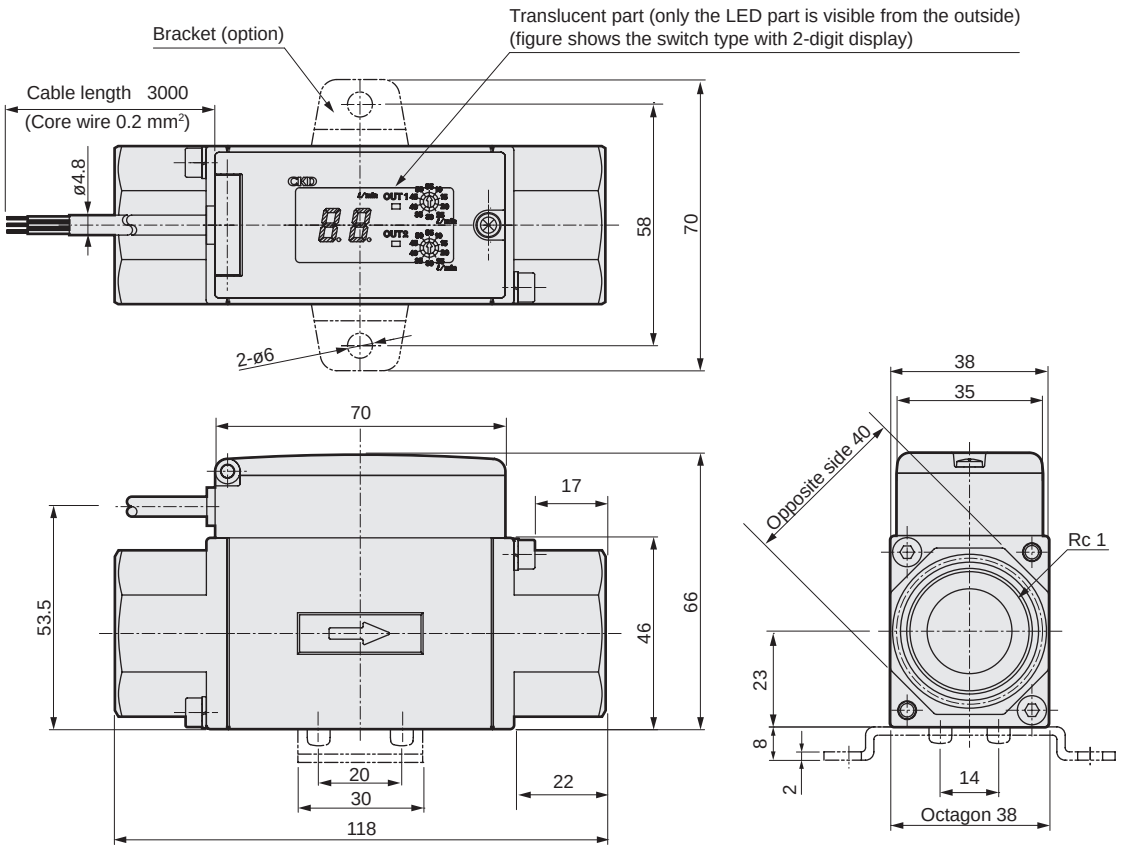

Water-use equipment

Safety Precautions

Be sure to read this section before use.
Refer to Intro Page 63 for general precautions.

Design/selection

1. Working fluids

⚠ DANGER

■ Do not use in drinking water.
As it does not conform to the requirements of the Food Sanitation Act, do not use this product for applications that measure water entering the human body. Intended applications include industrial sensors.

■ Never use with a flammable fluid.

⚠ WARNING

■ This product cannot be used as a billing meter.
Do not use this product for commercial transactions as it is not compliant with the Measurement Act. It cannot be calibrated, so use it as an industrial sensor.

■ Applicable fluid is water (industrial water, pure water); do not use with any other fluid.

2. Working environment

⚠ DANGER

■ Explosion-proof environments
Never use this product in an explosive gas atmosphere. The structure is not explosion-proof, and explosions or fires could occur.

⚠ WARNING

■ Corrosive environments
Do not use this product in an atmosphere containing corrosive gases such as sulfur dioxide.

■ Fluid temperature and ambient temperature
Use with fluid temperature within the range of 1 to 70°C. If the fluid temperature rises to 70°C and over, cool it down using a cooling system such as a chiller. As well, if there is a risk of freezing, drain the product or keep it warm to prevent freezing. Even if the ambient temperature is within the specified range, do not use this product in a location where rapid changes in temperature can occur.

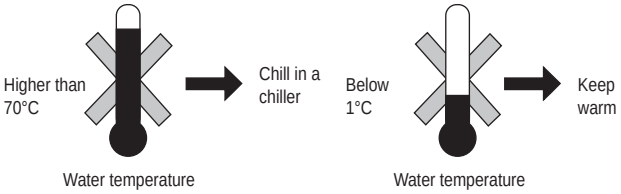

Ambient temperature should be in the 0 to 50°C range.

However, the WFK3060 series supports the following range.

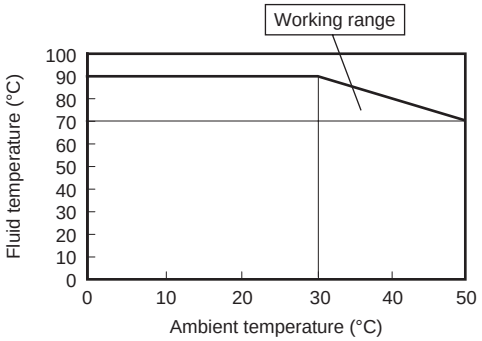

■ Max. working pressure
Do not use at a pressure exceeding the max. working pressure, as excessive pressure can cause product failure. To prevent the pressure from reaching the max. working pressure, particularly due to water hammer, take the following measures:
(1) Using a water hammer reduction valve or other similar mechanism, regulate the valve closing speed.
(2) Using elastic piping material, e.g. rubber hose, and an accumulator, absorb the impact pressure.
(3) Make the pipe length as short as possible.

■ Drip-proof environments
This product employs a dust-proof, drip-proof structure that provides reliability during maintenance and cleaning, during which it may be exposed to water splashing. However, avoid using this product in a location where it may be constantly exposed to water or intense splattering of water and/or oil.

■ Working conditions for CE compliance
This product is CE-marked, indicating conformity with the EMC Directives. The standard for the immunity for industrial environments applied to this product is EN61000-6-2; the following requirements must be satisfied in order to conform to this standard. Conditions

- The evaluation of this product is performed by using a cable that has a power supply line and a signal line paired to assess the product's performance.
- This product is not equipped with surge protection. Implement surge protection measures on the system side.

⚠CAUTION

■ If there is a risk of foreign matter entering the fluid, install a filter (strainer) on the primary side. If foreign matter adheres to the vortex generator or vortex detector, measurement accuracy can be compromised.

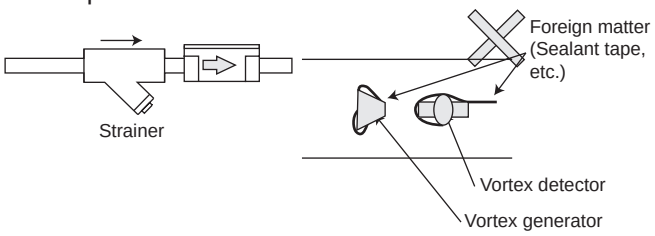

Strainer specifications

Item		Usage
Specification fluid		Water
Pressure resistance	MPa	2
Working pressure range	MPa	0 to 1
Operating ambient temperature range	°C	1 to 90
Main material		**Usage**
Body		Copper alloy casting
Strainer		Stainless steel

External view of strainer

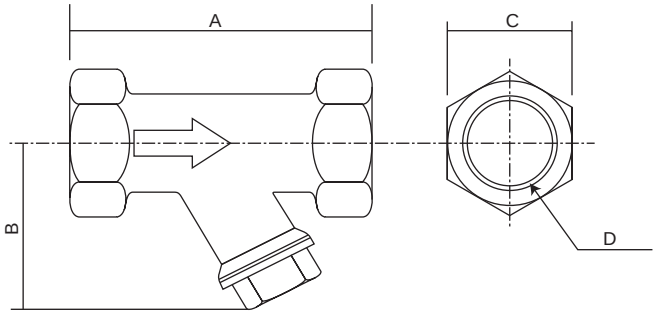

Model No.	A	B	C	D
WF-FL-280730	70	44	23	Rc 3/8
WF-FL-280731	80	49	28	Rc 1/2
WF-FL-280732	100	57	35	Rc 3/4
WF-FL-280733	115	72	43	Rc 1
WF-FL-280734	135	82	52	Rc1 1/4
WF-FL-280735	160	98	59	Rc1 1/2

■ Vibration/impact

Avoid vibrations of 20 m/s^2 or more and shocks of 98 m/s^2 or more. This may cause malfunction and/or damage, as this product uses the Karman's vortex type detection principle.

Vibration 20 m/s^2 or more Shock 98 m/s^2 or more

3. Analog output A1 (4-20 mA) connection

The following wiring diagram is for analog output A1 (4-20 mA) only

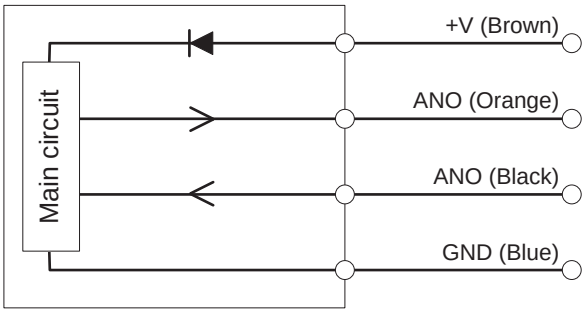

⚠CAUTION

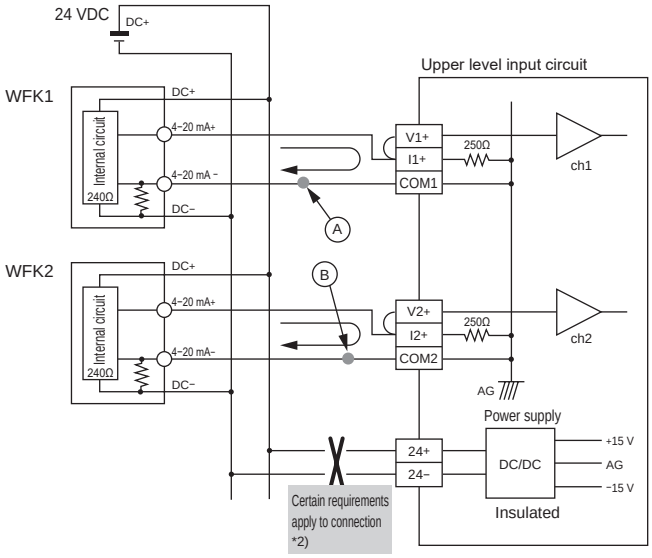

*1) Connecting multiple analog output 4 to 20 mA sensors to the same common input circuit (host computer, PLC, etc.) as shown above causes interference between the signals, preventing correct operation. In this case, use the voltage output (standard, A2, A3).

* The voltage at point A and that at point B are connected inside the input circuit, which gives them the same electrical potential, creating an error in the respective analog outputs.

*2) If the power supply (24 VDC) of the upper level input circuit is not isolated, install separate power supplies for the input circuit and the sensor.

Mounting, installation and adjustment

1. Wiring

⚠DANGER

■ Use with power supply voltage and output in the specified range.
Applying a voltage that is outside of the specified range may cause malfunction, damage to the sensor, electrical shock, and/or fire.
Do not use any load that exceeds the rated output. Using such a load may result in damage to the output part or fire.

⚠WARNING

■ Check the line color and terminal number when connecting wires.
While an overcurrent protection circuit for the output transistor and a protection circuit for erroneous wiring, using diodes for preventing reverse connection, are implemented, these do not protect against all incorrect wiring. Incorrect wiring can result in malfunction, failure, or damage to the sensor. Check the instruction manual for wiring colors and terminal numbers in order to ensure correct wiring.

■ Ensure that wires are properly insulated.
Check that wires do not come into contact with other circuits, that no ground faults occur, and that the insulator between terminals is not defective. Otherwise, overcurrent may flow into the sensor, causing damage.

⚠CAUTION

■ Keep the cable away from all noise sources, including power distribution wires. Noise can cause malfunctions.

■ Keep unused wires from coming into contact with other wires.

■ Do not short-circuit the output transistor.
When a load is short-circuited, overcurrent protection circuit is triggered to prevent damage to the output transistor; however, if this state persists, the output transistor could be damaged.
Overcurrent protection: Approx. 50 mA

■ Do not use a load that can produce surge voltage.
While an element that protects against surge is inserted, repeated exposure to surges can lead to damage. Use relays and solenoid valves that are equipped with surge absorption elements. If there is a surge source on the same power supply line, similarly implement surge protection.

■ Make sure that the lead wire is free of repeated bends and tension. This may lead to disconnection.

2. Piping

⚠CAUTION

■ Pipes can be installed vertically, horizontally, or in any other orientation. Note that pipes should be installed so that the fluid constantly fills the piping while it flows through the pipes. When installing a pipe vertically, making the fluid flow upward can reduce the influence of air bubbles inside.

■ If a pipe is narrowed just before the flow rate sensor, or if there is a valve or other restricting component on the primary side, cavitation occurs inside the pipe, preventing accurate measurement. For this reason, such piping should be installed on the secondary side of the sensor. (Cavitation: Vapor cavities that form due to the static pressure at end points, such as a ship propeller, dropping below the vapor pressure of the water. Reduced efficiency or screw damage may result.)

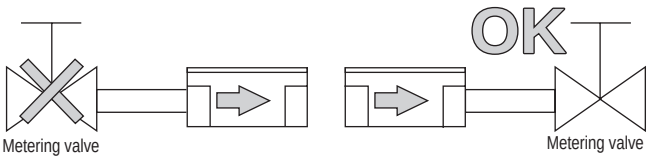

However, operating the pump with the secondary side valve closed may cause the flow rate sensor to detect pressure waves from the pump, resulting in incorrect indication. If this occurs, install the valve on the primary side. When doing so, ensure that a straight pipe with a diameter of 10 times or more bore size is installed between the valve and the flow rate sensor.

■ Using an elbow or bushing in the piping

When using an elbow or bushing in the piping, provide straight piping sections of at least 10 D on the IN side and 5 D on the OUT side when using a WFK3060 Series model. Note that bore size change by bushing should be within one size. Without a straight pipe, measurement accuracy can be compromised due to disturbances in the flow rate and/or pressure distribution. (Straight pipes are not necessary for the WFK3004, 3012, and 3032 Series. However, it is recommended that a straight pipe is installed to ensure stable measurements.)
* "D" here indicates the inner diameter of the piping material. Refer to the table below for specific values.

Bore size	Rc3/8 (10 A)	Rc1/2 (15 A)	Rc3/4 (20 A)	Rc1 (25 A)
5D	50 mm	75 mm	100 mm	125 mm
10D	100 mm	150 mm	200 mm	250 mm

■ Use appropriate torque to tighten the pipes when connecting them.
- The purpose is to prevent water leakage and thread damage.
- First tighten the bolts by hand to ensure that the threads are not damaged, and then use a tool.

[Recommended values]

Port thread	Tightening torque N·m
Rc3/8	31 to 33
Rc1/2	41 to 43
Rc3/4	62 to 65
Rc1	83 to 86



■ When installing piping, align the fluid flow direction to the direction marked on the body. Connecting the pipe in the wrong direction causes the flow rate to be indicated as less than the actual flow rate or zero.

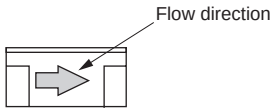

■ Before piping, clean out the interior of the pipes to get rid of any foreign matter, cutting chips and residual water.

■ Make sure that no force is applied to the resin parts when piping. Also, make sure that no sealant tape or adhesive enters the pipes when connecting the piping.

■ If there is significant difference between the ambient temperature and the fluid temperature, condensation will occur, which can enter wiring parts and cause operation failure. If condensation should occur, ensure that the mounting orientation of the flow rate sensor is horizontal and the display is facing upward.

■ When connecting pipes, wrap sealant tape in the opposite direction from the threading, from the inside position to within 2 mm from the pipe end.

- If sealant tape protrudes from the pipe threads, it could be cut when screwing the bolts in. This could cause the tape to enter the solenoid valve, causing failures.
- When using a liquid sealant, make sure it does not adhere to resin parts.Otherwise resin parts could be damaged, which is dangerous.

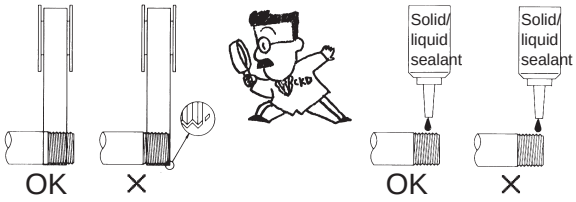

Use/maintenance

1. Common

⚠CAUTION

■ If a problem occurs during operation, immediately turn the power OFF, stop use, and contact your dealer. The display may become warm (approximately 40°C), but this is not an abnormality.

■ Hardware check and other internal settings are performed during approximately the first two seconds after turning the power on. Display and output do not function normally during this period. Particularly, if a transistor output is used in the control of an interlock circuit, an abnormal stop may occur. Mask the output during this period.

■ When changing the output set value, turn OFF the equipment first in order to prevent unexpected operation in the control system equipment.

■ Ensure proper operation through periodic inspections.

■ When removing the equipment, shut off the power, make sure that no water pressure is applied, and take other safety precautions beforehand.

■ Do not disassemble or modify, as this may cause malfunction.

■ When cleaning the product, use a low-polluting cleaning agent such as a neutral detergent.

2. Applicable fluid

⚠CAUTION

■ Follow the precautions below for the applicable fluids to be measured. If the following water quality standards are not met, performance may be compromised.

■ The water quality of the applicable fluid should be according to the "Guideline of Water Quality for Refrigeration and Air Conditioning Equipment" (Water quality standard: Cooling system - Circulating type - Circulating water) provided by the Japan Refrigeration and Air Conditioning Industry Association.

Item	Chemical formula	Unit	Water quality standard
pH	–	pH (25°C)	6.5 to 8.2
Electrical conductivity	–	mS/m (25°C)	0.2 to 80 *1
Chloride ion	Cl^-	mg/L(ppm)	200 or less
Sulfate ion	SO_4^{2-}	mg/L(ppm)	200 or less
Acid consumption (pH4.8)	$CaCO_3$	mg/L(ppm)	100 or less
Total hardness	$CaCO_3$	mg/L(ppm)	200 or less
Calcium hardness	$CaCO_3$	mg/L(ppm)	150 or less
Ionized silica	SiO_2	mg/L(ppm)	50 or less
Iron	Fe	mg/L(ppm)	1.0 or less
Copper	Cu	mg/L(ppm)	0.3 or less
Sulfide ion	S^{2-}	mg/L(ppm)	Not detected
Ammonium ion	NH_4^+	mg/L(ppm)	1.0 or less
Residue chlorine	Cl	mg/L(ppm)	0.3 or less
Free carbonic acid	CO_2	mg/L(ppm)	4.0 or less
Stability index	–	–	6.0 to 7.0

*1 Electrical conductivity should be 0.2 [mS/m] and over. For use in the range of 0.05 to 0.2 [mS/m], consult with CKD. Do not use for ultrapure water, i.e. water with electrical conductivity below 0.05 [mS/m].

MEMO

Total air systems

Overview

Total air systems are pneumatic control systems enabling configuration of cylinder control circuits, etc., using compressed air alone without electricity.

Features

(1) Circuit configuration enabled by compressed air only

(2) Superior safety
Since electricity is not used, safe in flammable atmosphere. Concerns about fire/electricity leakage, etc., are also eliminated.

(3) Highly economical
Power supply and safety devices are not required. Furthermore, since the same energy is used for power and control sections, all costs are reduced in design, manufacturing and maintenance, etc.

Page

Total air system (detector/circuit device) 1607

Gamma system (PLC/signal control components) 1649

Total air control systems

Total air systems

■ **Total air systems**



CONTENTS

Series variation	1608
Detector	1610
● Compact mechanical valve (MS)	1612
● Medium mechanical valve (MM)	1626
● Large mechanical valve (MAVL)	1638
Circuit device	1643
● Air timer (RTD-3A)	1644
● Pressure switch (PE-1)	1645
● Air lamp (AL-*)	1645
● Compact air lamp (SAL-*)	1646
⚠ Safety precautions	1648

Detector

Model	Product appearance	Valve	Connection	Operation															Effective cross-sectional area (mm^2)	Page
				Pin plunger	Roller lever	One way roller lever	Roller plunger	Straight plunger	Toggle switch	Pushbutton valve	Mushroom valve	Select valve	Select valve (2 stations)	Roller arm	Adjusting roller lever	Rod lever	Wire lever	Spring lever		
Compact mechanical valve (MS)		Normally closed	Rc1/8	●	●	●	●	●	●	●	●	●	●						2.5	1612
			ø4 push-in fitting	●	●	●	●	●	●	●	●	●	●						1.6	
		Normally open	Rc1/8	●	-	-	-	-	-	-	-	-	-						2.5	
			ø4 push-in fitting	●	-	-	-	-	-	-	-	-	-						1.6	
Medium mechanical valve (MM)		Normally closed	Rc1/8	●	●									●	●	●	●	●	2.5	1626
			ø4 push-in fitting	●	●									●	●	●	●	●	1.6	
		Normally open	Rc1/8	●	-									-	-	-	-	-	2.5	
			ø4 push-in fitting	●	-									-	-	-	-	-	1.6	
Large mechanical valve (MAVL)		Both normally closed and normally open are available by piping method.	Rc1/4	●	●									●	●	●	●	●	31	1638

indicates not available.
- indicates available, but not specified in the catalog.

Circuit device

Model	Product appearance	Port size	Applications	Page
● Air timer RTD-3A		ø4 push-in fitting	Delaying pneumatic signals for max. 30 seconds.	1644
● Pressure switch PE-1		ø4 push-in fitting	Switching electric contact by 0.2 to 0.7 MPa of air signals.	1645
● Air lamp AL-R -B -Y		ø4 push-in fitting	Confirming residual pressure and displaying operational status. (3 display colors are available; red, blue, and yellow)	1645
● Compact air lamp SAL-R -B		ø4	Confirming residual pressure and displaying operational status. (Two display colors are available: red and blue) Just insert a ø4 push-in fitting.	1646

Detector

A detector is used to confirm the cylinder position and the presence of material during control. A variety of TAS detectors are available to detect objects of different shapes and states. Optimum detection is ensured by selecting these devices.

Detector types



- Mechanical detection
  - Mechanical valve
    - MS Series mechanical valve (compact)
    - MM Series mechanical valve (medium)
    - MAVL Series mechanical valve (large)
  - Non-contact detection by air flow
    - Interface valve (output: air signal)

Series	Features	Applications	Page
MS Series mechanical valve	Equivalent to electrical micro switch Compact and most commonly used.	Confirmation of cylinder, machine position and manual operation	1612
MM Series mechanical valve	Equivalent to compact/vertical electrical limit switch, great mechanical actuator strength. Actuators, such as rod lever and spring rod lever, etc., not available in the MS Series are now available. (Flow rate is the same as MS)	Confirmation of cylinder, machine, and material position	1626
MAVL Series mechanical valve	Equivalent to vertical electrical limit switch. The flow rate is large, so an ø80 cylinder can be moved directly.	Confirmation of cylinder, machine, and material position	1638

MEMO

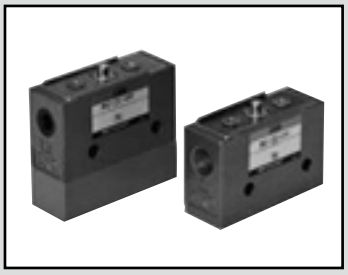

Compact mechanical valve

MS Series

This compact 3-way valve for pneumatic control is equivalent to a micro switch for electric devices and operates with mechanical detection or manual operation.

● Port size: Rc1/8, ø4

RoHS CAD

Common specifications

Item	MS-00 Normally closed	MS-01 Normally closed	MS-10 Normally open	MS-11 Normally open
Working fluid	Compressed air			
Valve structure	Poppet valve			
Min. working pressure MPa	0 (≈0 psi, 0 bar)			
Max. working pressure MPa	0.8 (≈120 psi, 8 bar)			
Proof pressure MPa	1.2 (≈170 psi, 12 bar)			
Port size	Rc1/8	ø4	Rc1/8	ø4
Effective cross-sectional area mm^2	2.5	1.6	2.5	1.6
Ambient temperature °C	5 (41°F) to 60 (140°F)			
Fluid temperature °C	5 (41°F) to 60 (140°F)			

Note: A normally open valve is a made-to-order product.

How to order

MS – 0 0 – PP

- Ⓐ Pressurization
- Ⓑ Connection port
- Ⓒ Type of operation actuator

Code	Description
Ⓐ Pressurization	
0	Normally closed valve
1	Normally open valve (made-to-order product)
4	4-way valve
Ⓑ Connection port	
0	Rc1/8 thread
1	Push-in fitting ø4
Ⓒ Type of operation actuator	
PP	Pin plunger
RL	Roller lever
RLOW	One way roller lever
RP	Roller plunger
SP	Straight plunger
TG	Toggle switch
PB1-*1	Pushbutton valve
ESP-*2	Mushroom valve
SE1	Select valve
SE2	Select valve (2-station type)
***1 For push button type color code (PB1)**	
Blank	Black, green, and red are contained. Make a selection depending on the color to be used.
Y	Yellow
***2 For mushroom color code (ESP)**	
B	Black
G	Green
R	Red
Y	Yellow

Piping connection method

For piping connection, either taper female thread Rc1/8 connection for a pipe or quick connection for an O.D. ø4 tube is selected based on the application.

● MS-00-□ taper female thread Rc1/8 for pipe

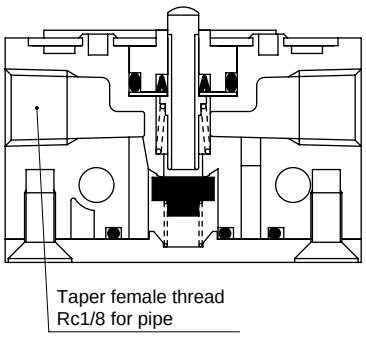

● MS-01-□ push-in fitting for O.D. ø4 soft nylon

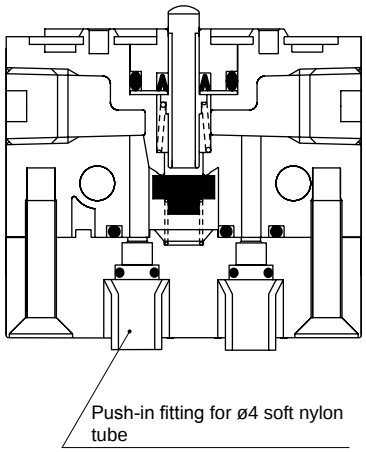

MS-00 is a taper female pipe thread Rc1/8 connection.
· General purpose connection is possible.
· Larger flow rate than MS-01.

MS-01 is a push-in fitting for O.D. ø4 soft nylon.
· Connection is made by simply inserting a soft nylon tube, so plumbing time is reduced significantly.
· Connecting bracket is not required. Therefore, there is no need to consider the extra space for a bracket.

Operational explanation drawing

Not operating

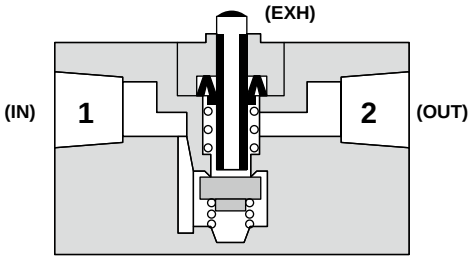

Operating

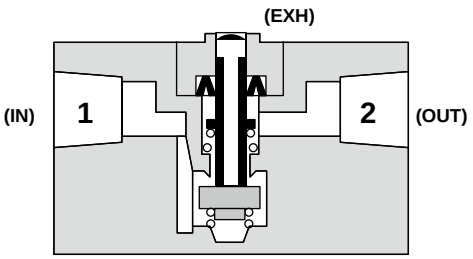

Note) Pressurization in the reverse direction (pressurized from Port 2) is not possible.

Internal structure and parts list

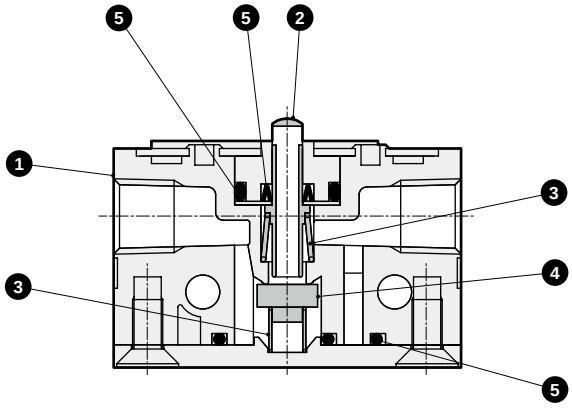

No.	Part	Material
1	Body	Zinc alloy
2	Spool	Stainless steel
3	Spring	Stainless steel
4	Valve	Nitrile rubber
5	Gasket	Nitrile rubber

Dimensions: Pin plunger (normally closed valve)



JIS symbol

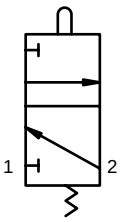

Specifications

Operation code	MS-00-PP,MS-01-PP
O.F	10.8 N (when pressurized at 0.49 MPa)
P.T	1.2 mm
O.T	1.8 mm
T.T	3 mm

Note: Use within 3 mm operation.
(If operated 3 mm and over repeatedly, the product may be damaged.)

Refer to page 1648 for the actuator operation code.

● MS-00-PP Rc1/8 connection (Weight: 110 g)

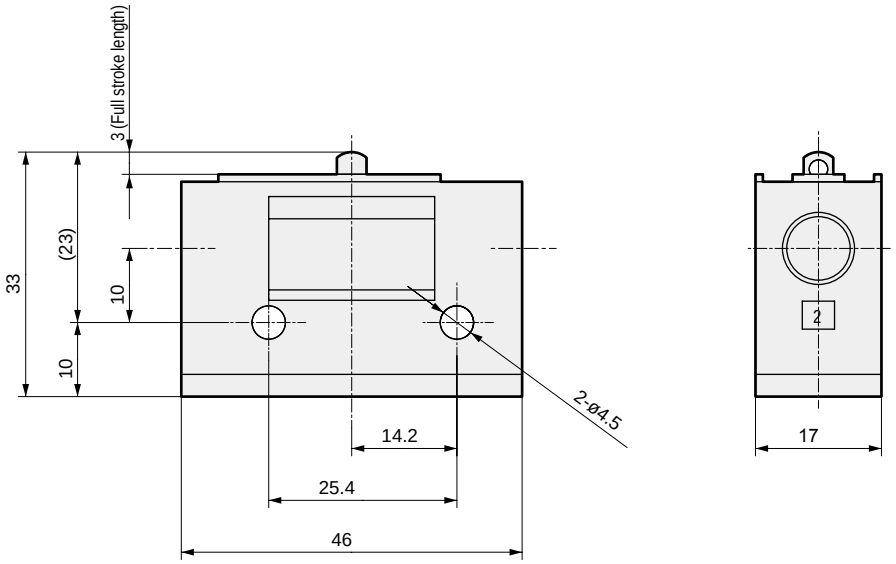

● MS-01-PP Push-in connection (Weight: 160 g)

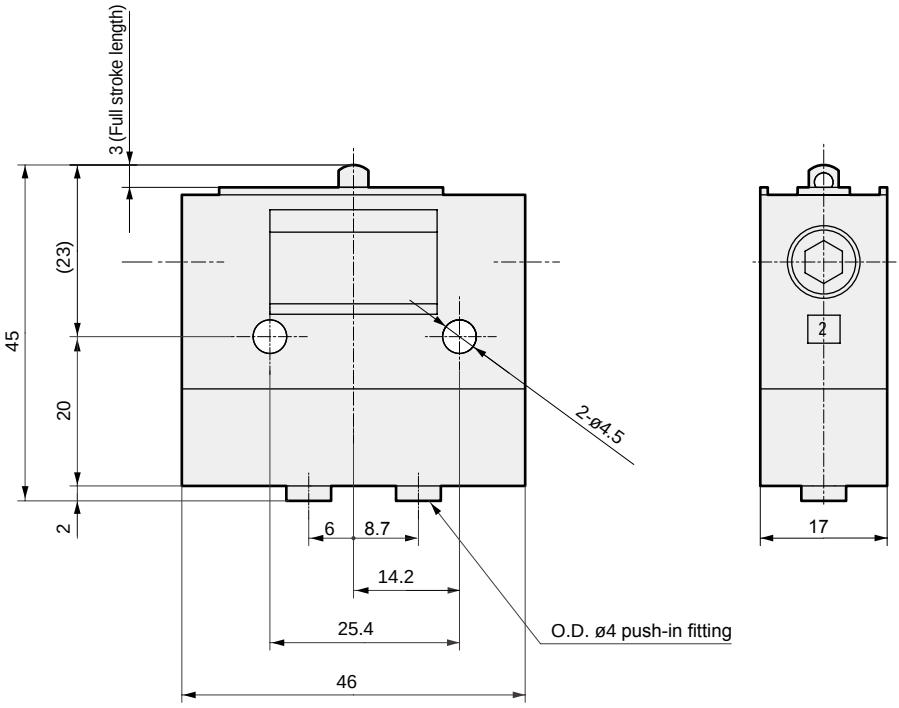

Dimensions: Roller lever (normally closed valve)

CAD



JIS symbol

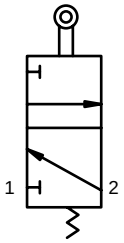

Specifications

Operation code	MS-00-RL,MS-01-RL
O.F	3.5 N (when pressurized at 0.49 MPa)
P.T	4.1 mm
O.T	2.9 mm
T.T	7 mm

Refer to page 1648 for the actuator operation code.

● MS-00-RL Rc1/8 connection (Weight: 120 g)

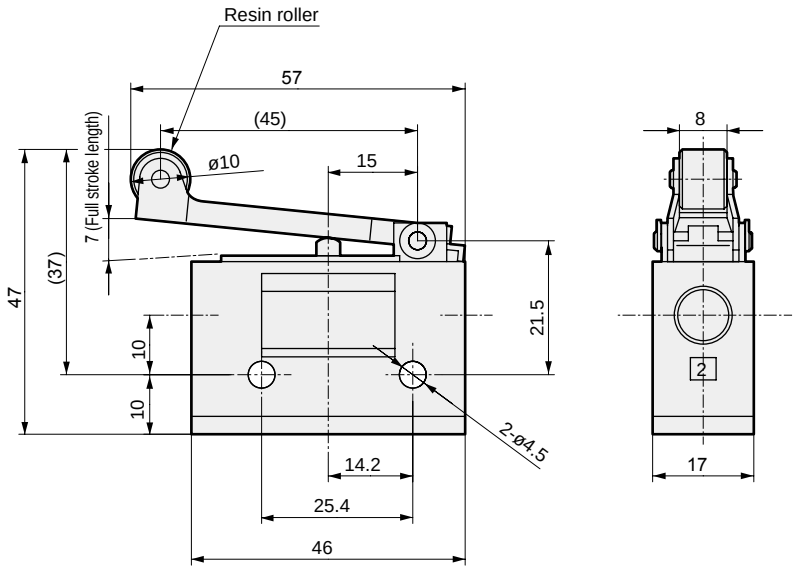

● MS-01-RL Push-in connection (Weight: 170 g)

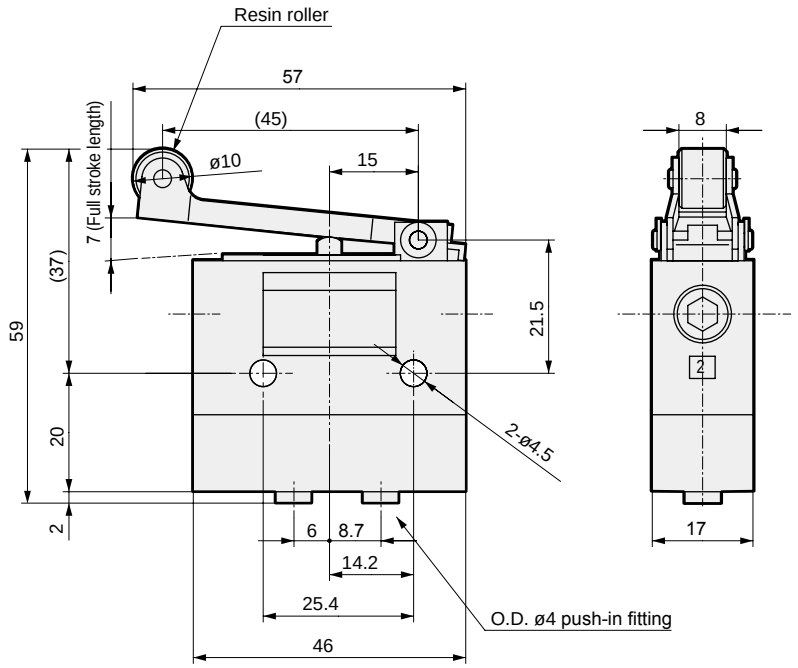

Dimensions: One way roller lever (normally closed valve)

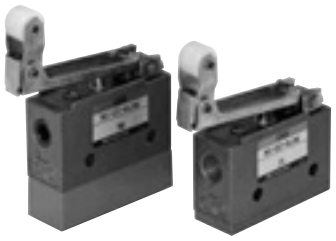

JIS symbol

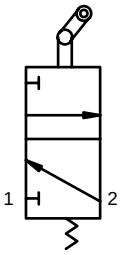

Specifications

Operation code	MS-00-RLOW,MS-01-RLOW
O.F	3.5 N (when pressurized at 0.49 MPa)
P.T	4.1 mm
O.T	2.9 mm
T.T	7 mm

Refer to page 1648 for the actuator operation code.

● MS-00-RLOW Rc1/8 connection (Weight: 130 g)

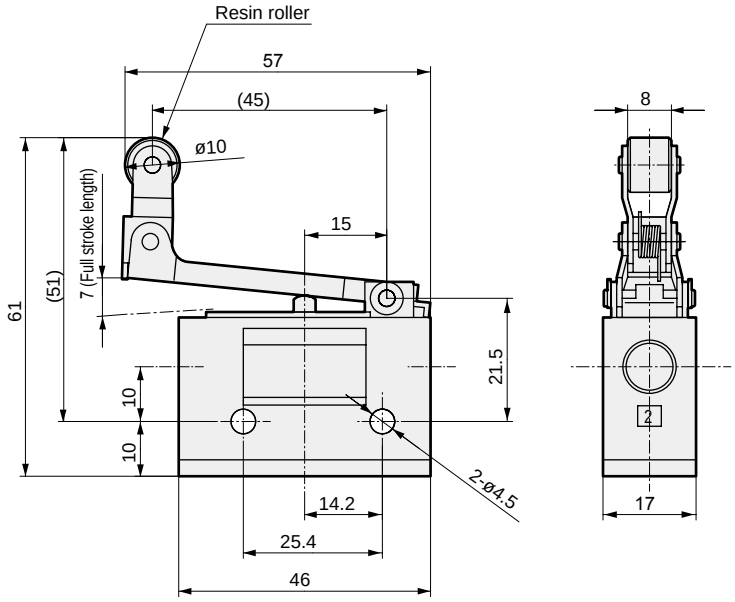

● MS-01-RLOW Push-in connection (Weight: 180 g)

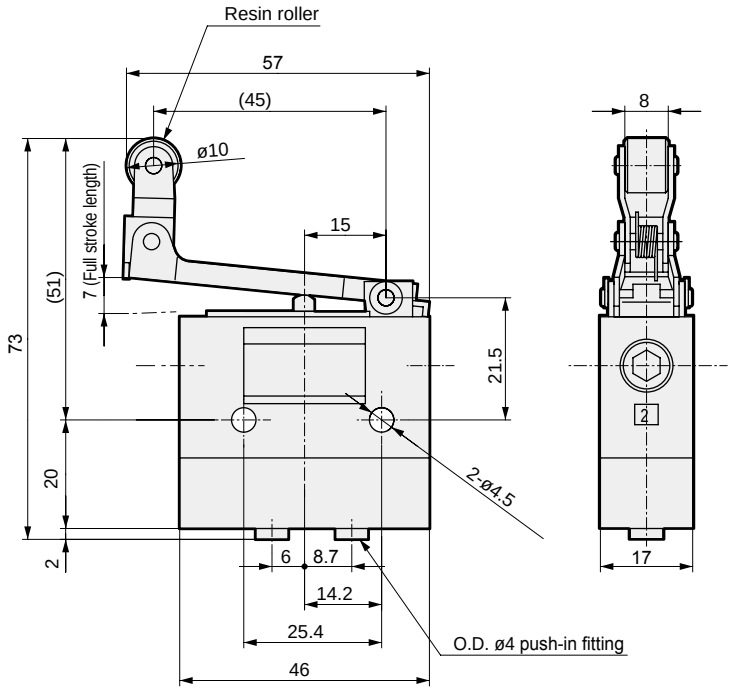

Dimensions: Roller plunger (normally closed valve)

CAD



JIS symbol

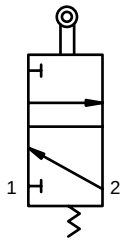

Specifications

Operation code	MS-00-RP,MS-01-RP
O.F	10.8 N (when pressurized at 0.49 MPa)
P.T	1.3 mm
O.T	3.7 mm
T.T	5 mm

Refer to page 1648 for the actuator operation code.

* If a roller is used while pushed and rotated, the roller section is worn away quickly, and the product may malfunction.

● MS-00-RP Rc1/8 connection (Weight: 140 g)

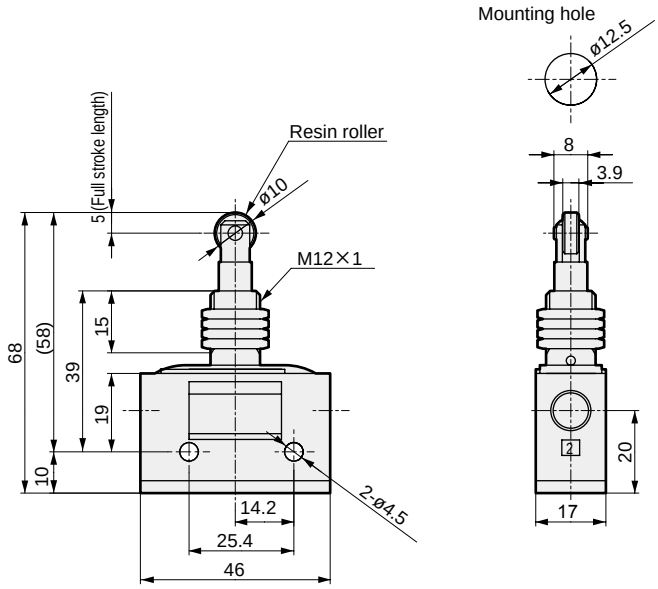

● MS-01-RP Push-in connection (Weight: 190 g)

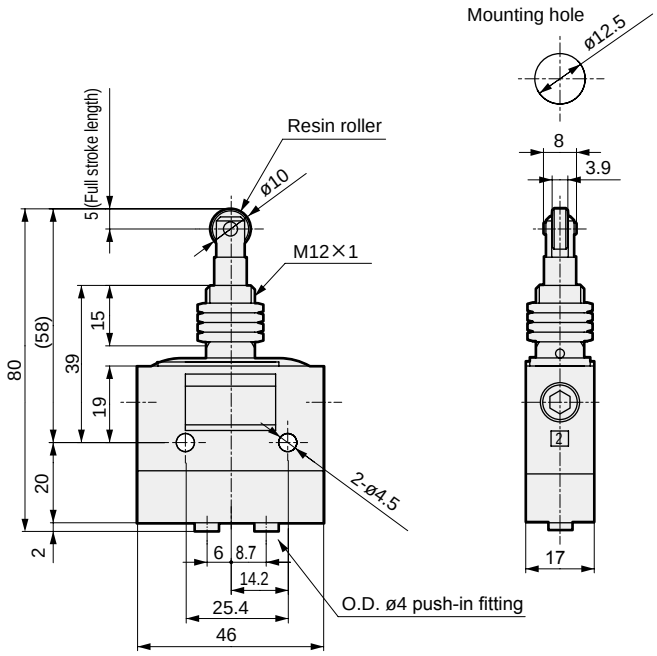

Dimensions: Straight plunger (normally closed valve)

CAD



JIS symbol

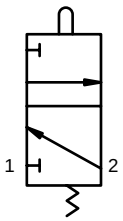

Specifications

Operation code	MS-00-SP,MS-01-SP
O.F	10.8 N (when pressurized at 0.49 MPa)
P.T	1.3 mm
O.T	3.7 mm
T.T	5 mm

Refer to page 1648 for the actuator operation code.

● MS-00-SP Rc1/8 connection (Weight: 140 g)

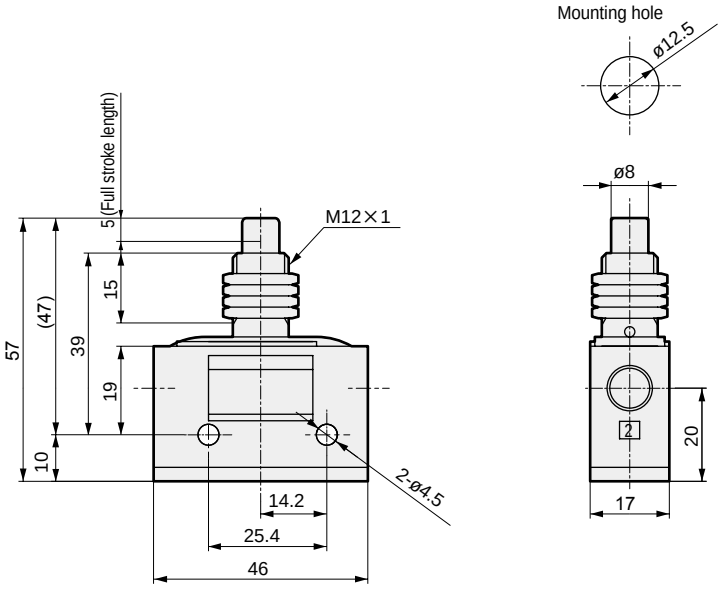

● MS-01-SP Push-in connection (Weight: 190 g)

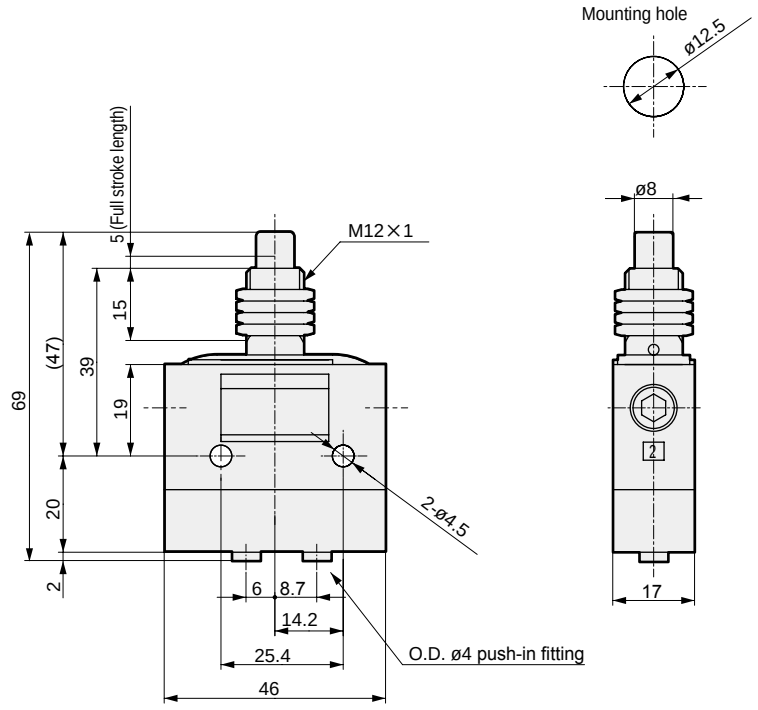

Dimensions: Toggle switch (normally closed valve)



JIS symbol

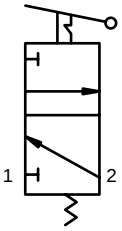

Specifications

Item	MS-00-TG,MS-01-TG
Operating angle	60°

● MS-00-TG Rc1/8 connection (Weight: 140 g)

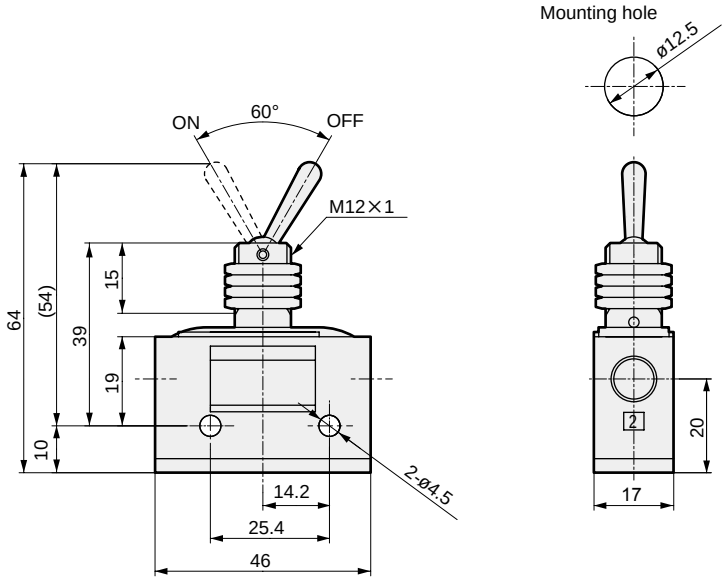

● MS-01-TG Push-in connection (Weight: 190 g)

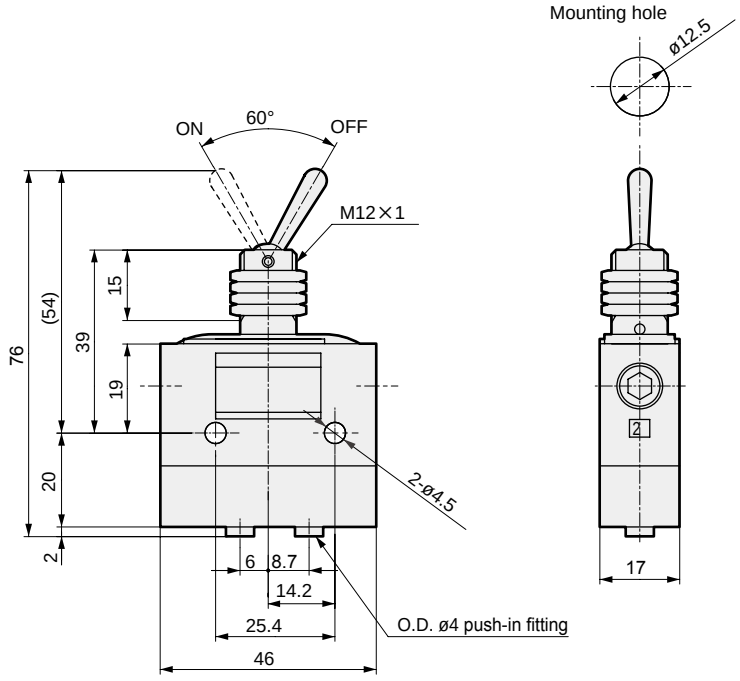

Dimensions: Pushbutton valve (normally closed valve)



JIS symbol

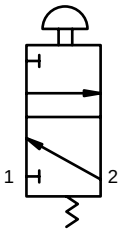

Pushbutton color

Code	Color
Blank	Red
	Green
	Black
Y	Yellow

(Note) 3 types of color chips (R: red, G: green, B: black) are contained. Make a selection depending on the color to be used.

● MS-00-PB1-* Rc1/8 connection (Weight: 180 g)

(* mark indicates pushbutton color.)

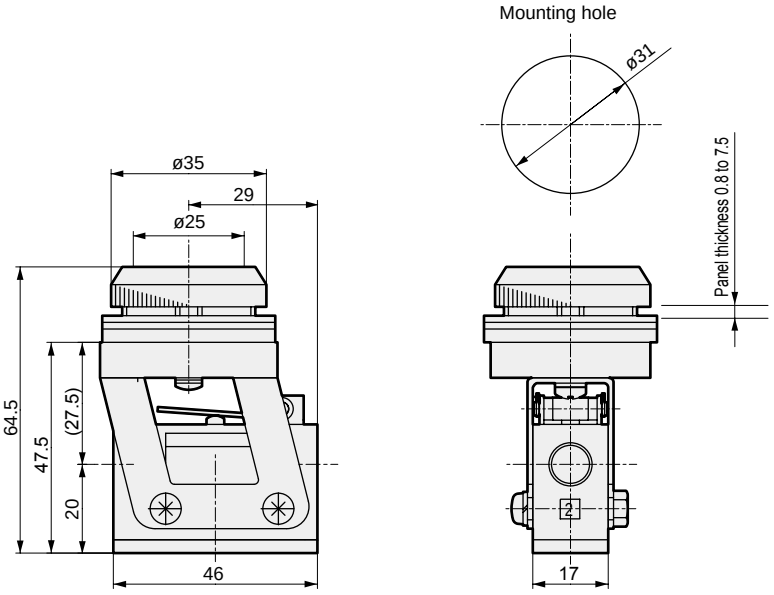

● MS-01-PB1-* Push-in connection (Weight: 230 g)

(* mark indicates pushbutton color.)

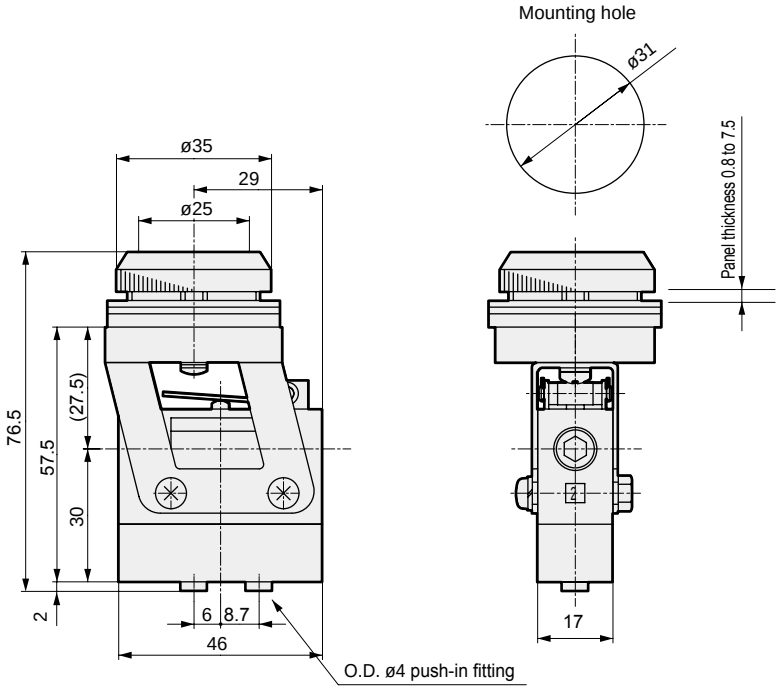

Dimensions: Mushroom valve (normally closed valve)



JIS symbol

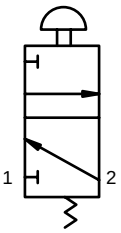

Pushbutton color

Code	Color
R	Red
G	Green
B	Black
Y	Yellow

● MS-00-ESP-* Rc1/8 connection (Weight: 180 g)

(* mark indicates pushbutton color.)

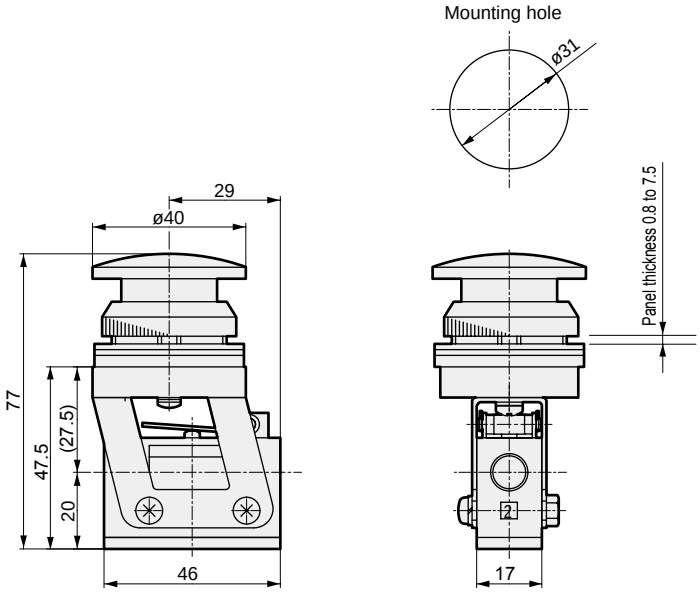

● MS-01-ESP-* Push-in connection (Weight: 230 g)

(* mark indicates pushbutton color.)

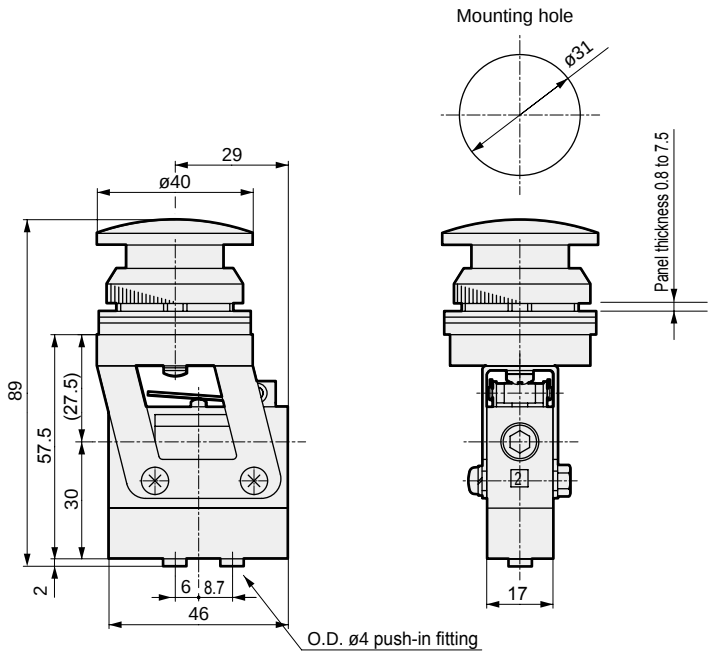

Dimensions: Select valve (normally closed valve)



JIS symbol

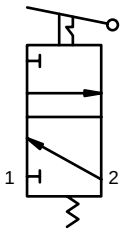

Specifications

Item	MS-00-SE1,MS-01-SE1
Operating angle	90°
Knob color	Black

● MS-00-SE1 Rc1/8 connection (Weight: 190 g)

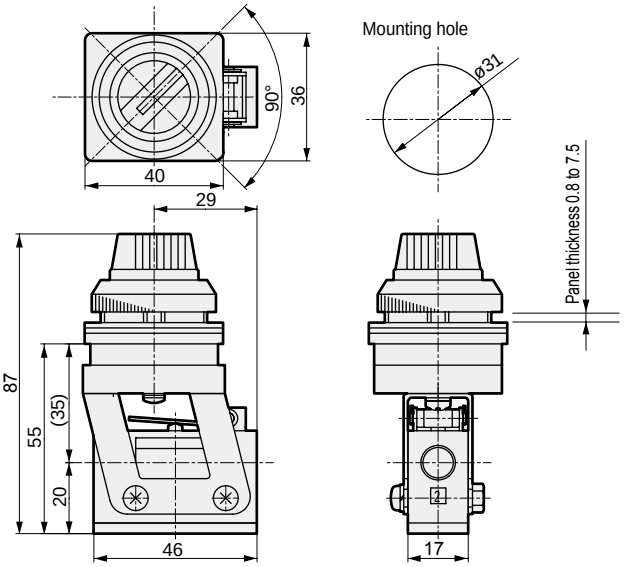

● MS-01-SE1 Push-in connection (Weight: 240 g)

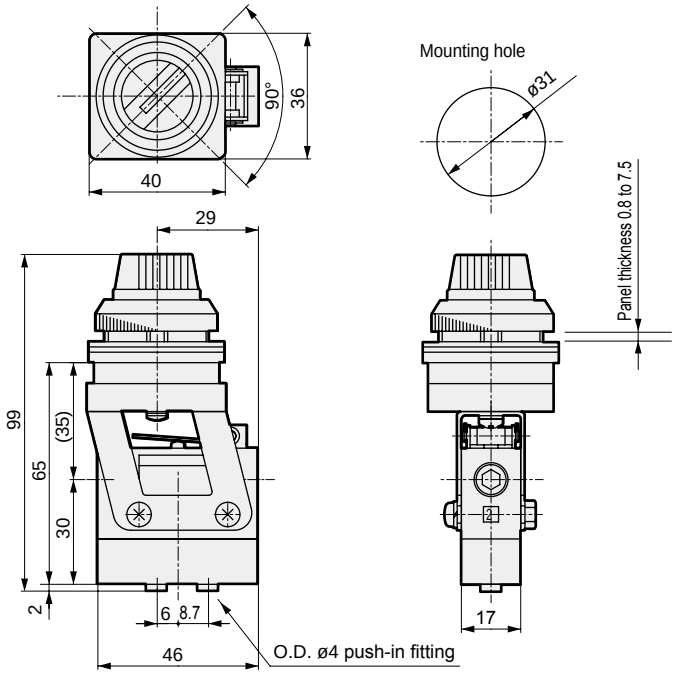

Dimensions: Select valve (2 stations) 4-way valve



JIS symbol

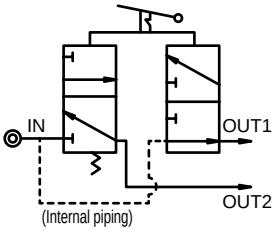

Specifications

Item	MS-40-SE2,MS-41-SE2
Operating angle	90°
Knob color	Black

● MS-40-SE2 Rc1/8 connection (Weight: 350 g)

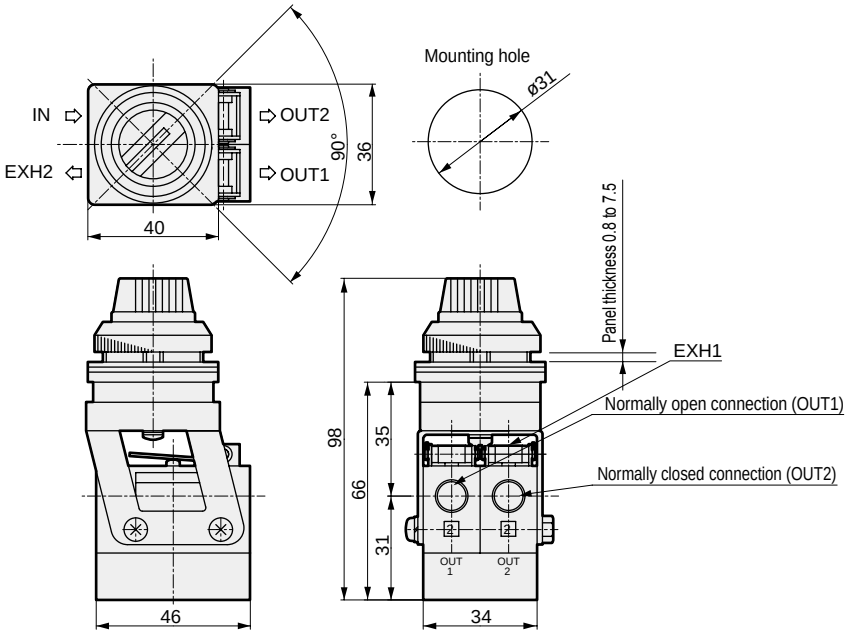

● MS-41-SE2 Push-in connection (Weight: 430 g)

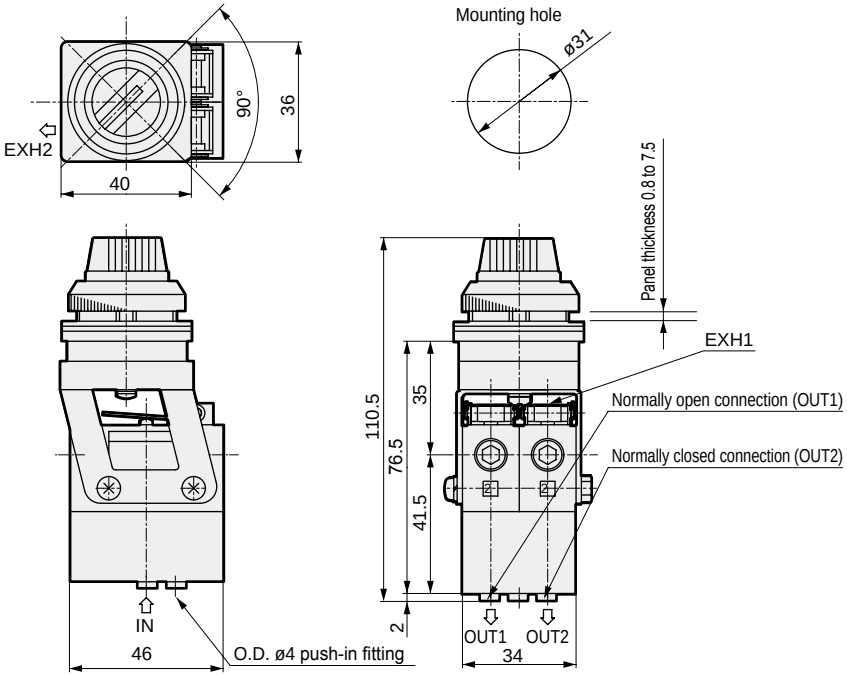

Dimensions: Normally open valve

JIS symbol



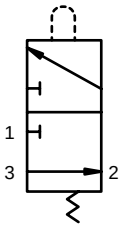

● MS-10- □ Rc1/8 connection
This drawing shows the MS-10-PP.

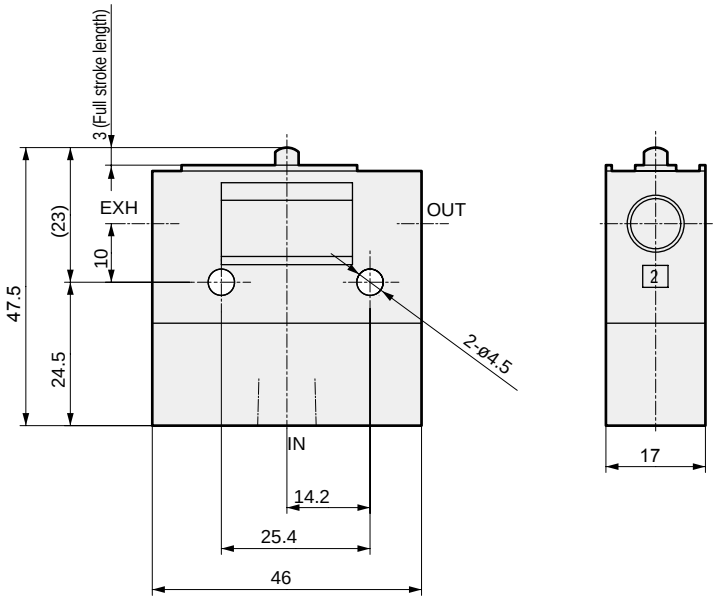

Weight

Model No.	Weight g
MS-10-PP	140
MS-10-RL	150
MS-10-RLOW	160
MS-10-RP	170
MS-10-SP	170
MS-10-TG	170
MS-10-PB1	210
MS-10-ESP	210
MS-10-SE1	220

Dimensions: Normally open valve CAD

JIS symbol



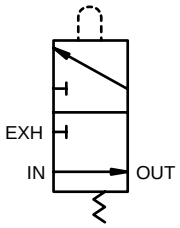

● MS-11- □ Quick connection
This drawing shows the MS-11-PP.

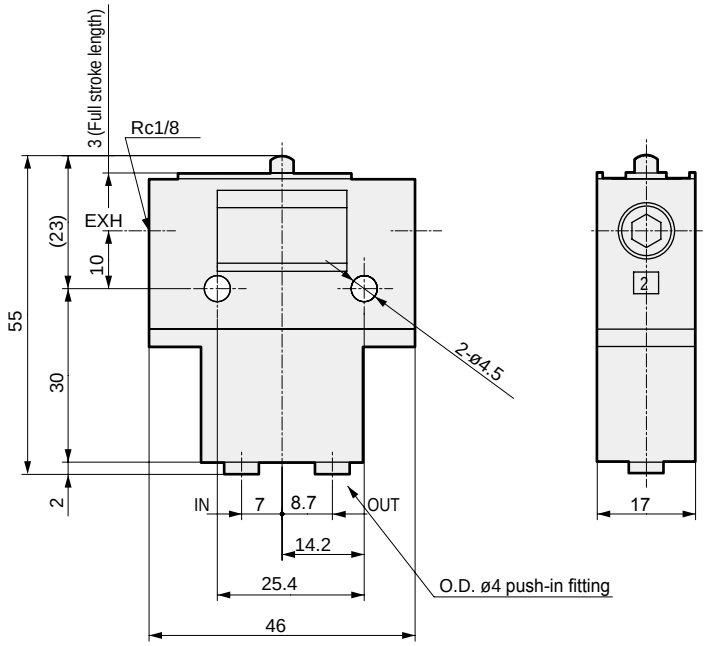

Weight

Model No.	Weight g
MS-11-PP	140
MS-11-RL	150
MS-11-RLOW	160
MS-11-RP	170
MS-11-SP	170
MS-11-TG	170
MS-11-PB1	210
MS-11-ESP	210
MS-11-SE1	220

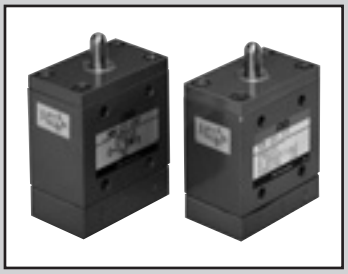

Medium mechanical valve

MM Series

This medium size 3-way valve for pneumatic control is equivalent to a compact limit switch for electric devices and operates with mechanical detection.

● Port size: Rc1/8, ø4

RoHS CAD

Specifications

Item	MM-00 Normally closed	MM-01 Normally closed	MM-10 Normally open	MM-11 Normally open
Working fluid	Compressed air			
Valve structure	Poppet valve			
Min. working pressure MPa	0 (≈0 psi, 0 bar)			
Max. working pressure MPa	0.8 (≈120 psi, 8 bar)			
Proof pressure MPa	1.2 (≈170 psi, 12 bar)			
Port size	Rc1/8	ø4	Rc1/8	ø4
Effective cross-sectional area mm^2	2.5	1.6	2.5	1.6
Ambient temperature °C	5 (41°F) to 60 (140°F)			
Fluid temperature °C	5 (41°F) to 60 (140°F)			

Note: A normally open valve is a made-to-order product.

How to order

MM - 0 0 - PP

- Ⓐ Pressurization
- Ⓑ Connection port
- Ⓒ Operation actuator

Code	Description
Ⓐ Pressurization	
0	Normally closed valve
1	Normally open valve (made-to-order product)
Ⓑ Connection port	
0	Rc1/8 thread
1	Push-in fitting ø4
Ⓒ Operation actuator	
PP	Pin plunger
RA	Roller arm
RAA	Adjusting roller lever
RAB	Roller lever
RAC	Roller lever
RAD	Rod lever
RAE	Wire lever
RAF	Spring rod

Piping connection method

For piping connection, either taper female thread Rc1/8 for a pipe or quick connection for an O.D. ø4 tube is selected based on the application.

● MM-00

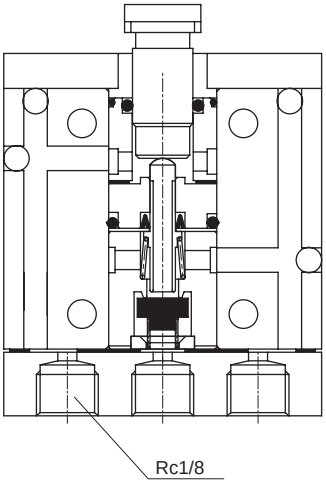

● MM-01

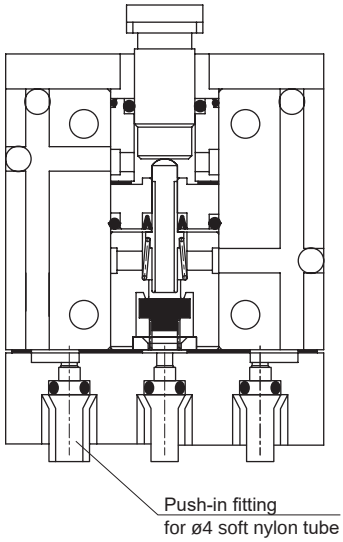

MM-00 is a taper female pipe thread Rc1/8 connection.
· General purpose connection is possible. · Larger flow rate than MM-01.

MM-01 is a push-in fitting for O.D. ø4 soft nylon.
· Connection is made by simply inserting a soft nylon tube, so plumbing time is reduced significantly.
· Connecting bracket is not required. Therefore, there is no need to consider the extra space for a bracket.

Operational explanation drawing

Not operating

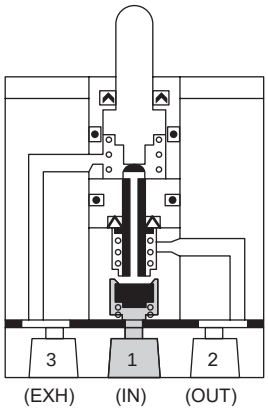

Operating

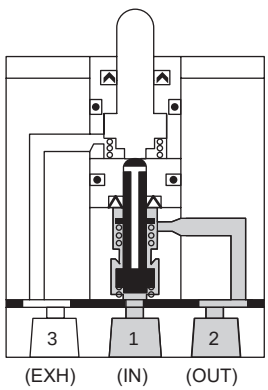

Note) Pressurization from ports other than the IN (1) port is not possible.

Internal structure and parts list

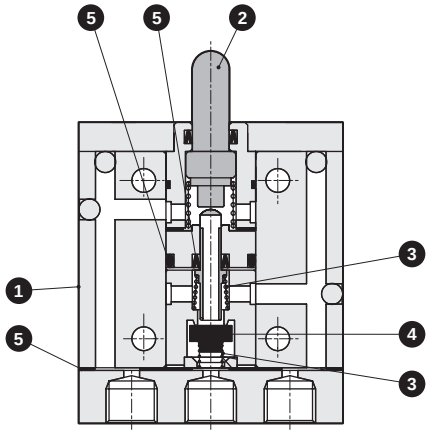

No.	Part	Material
1	Body	Aluminum alloy
2	Spool	Stainless steel
3	Spring	Stainless steel
4	Valve	Nitrile rubber
5	Gasket	Nitrile rubber

Dimensions: Pin plunger (normally closed valve)



JIS symbol

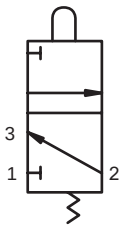

Specifications

Operation code	MM-00-PP,MM-01-PP
O.F	25.5 N (when pressurized at 0.49 MPa)
P.T	1.2 mm
O.T	1.8 mm
T.T	3 mm

Refer to page 1648 for the actuator operation code.

● MM-00-PP Rc1/8 connection (Weight: 230 g)

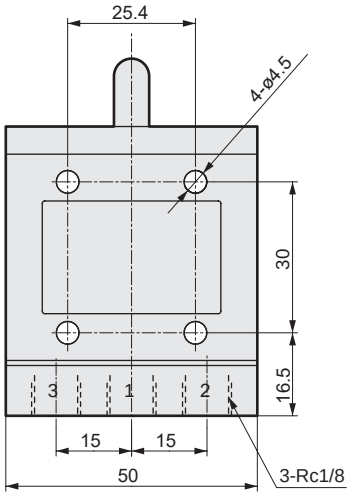

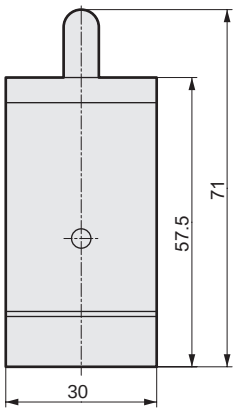

● MM-01-PP Push-in connection (Weight: 260 g)

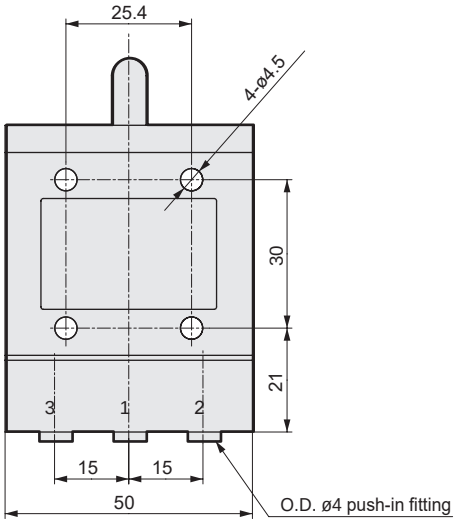

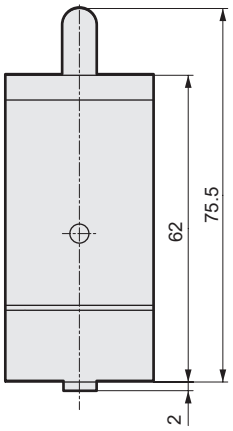

Dimensions: Roller arm (normally closed valve)



JIS symbol

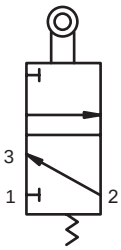

Specifications

Operation code	MM-00-RA,MM-01-RA
O.F	39.2 N·cm (when pressurized at 0.49 MPa)
P.T	20°
O.T	30°
T.T	50°

Refer to page 1648 for the actuator operation code.

● MM-00-RA Rc1/8 connection (Weight: 290 g)

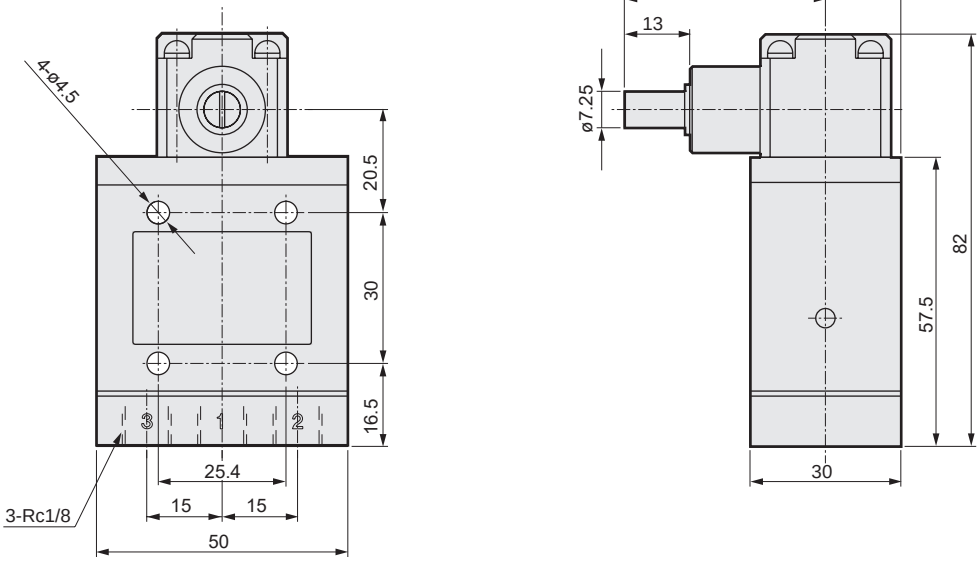

● MM-01-RA Push-in connection (Weight: 330 g)

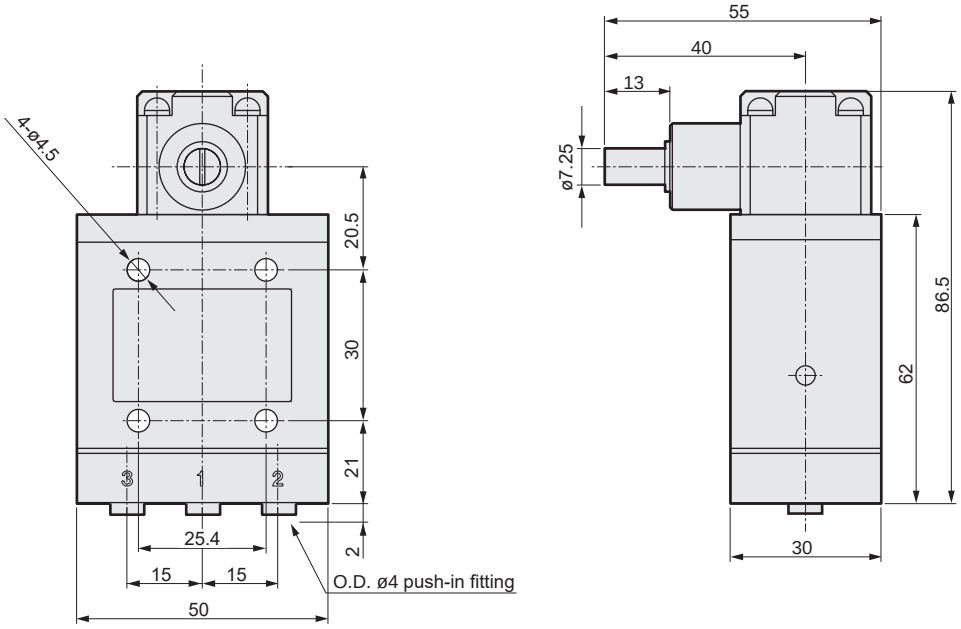

Dimensions: Adjusting roller lever (normally closed valve)



JIS symbol

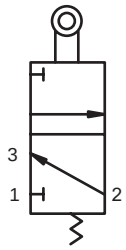

Specifications

Operation code	MM-00-RAA,MM-01-RAA
O.F	4.5 N (when pressurized at 0.49 MPa)
P.T	20°
O.T	30°
T.T	50°

Refer to page 1648 for the actuator operation code.

● MM-00-RAA Rc1/8 connection (Weight: 350 g)

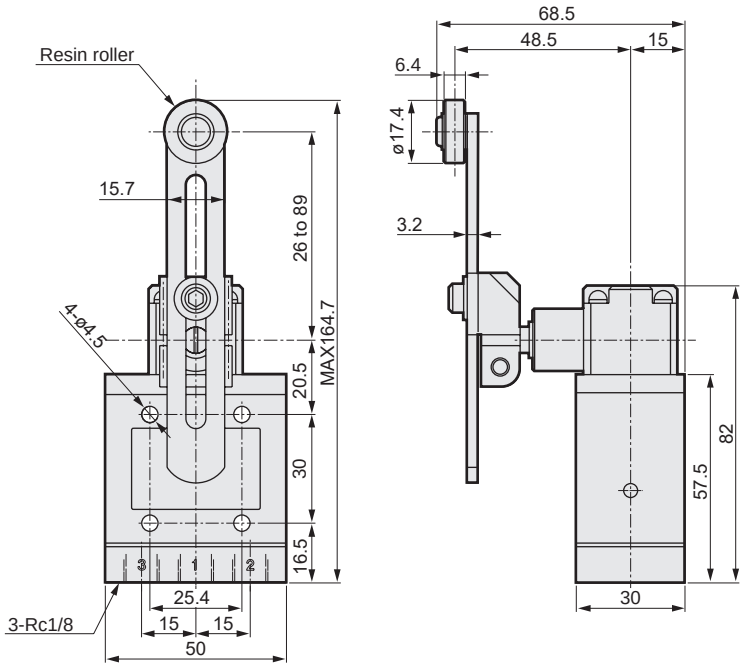

● MM-01-RAA Push-in connection (Weight: 380 g)

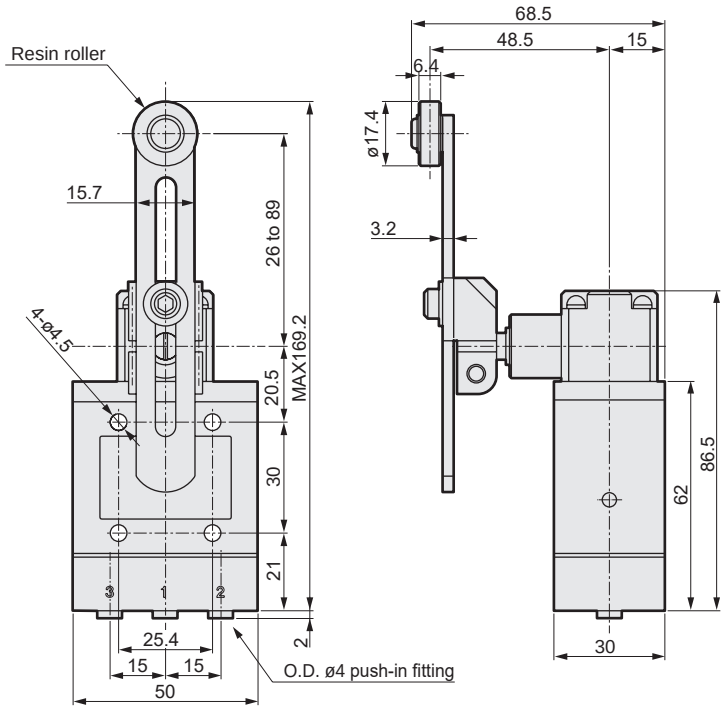

Dimensions: Roller lever (normally closed valve)



JIS symbol

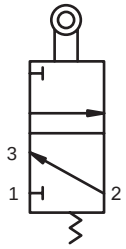

Specifications

Operation code	MM-00-RAB,MM-01-RAB
O.F	9.8 N (when pressurized at 0.49 MPa)
P.T	20°
O.T	30°
T.T	50°

Refer to page 1648 for the actuator operation code.
* The arm fixing method differs from the RAC.

● MM-00-RAB Rc1/8 connection (Weight: 320 g)

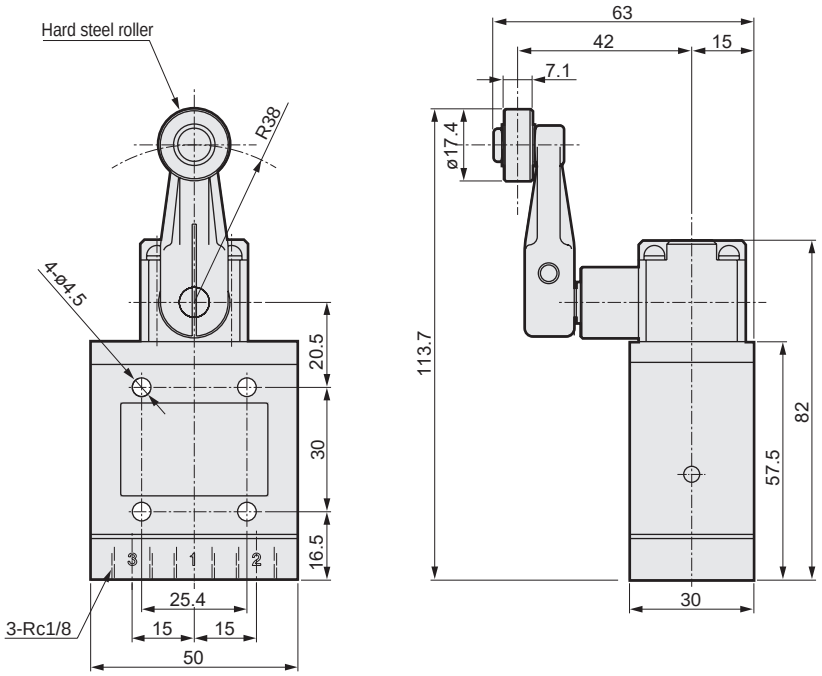

● MM-01-RAB Push-in connection (Weight: 350 g)

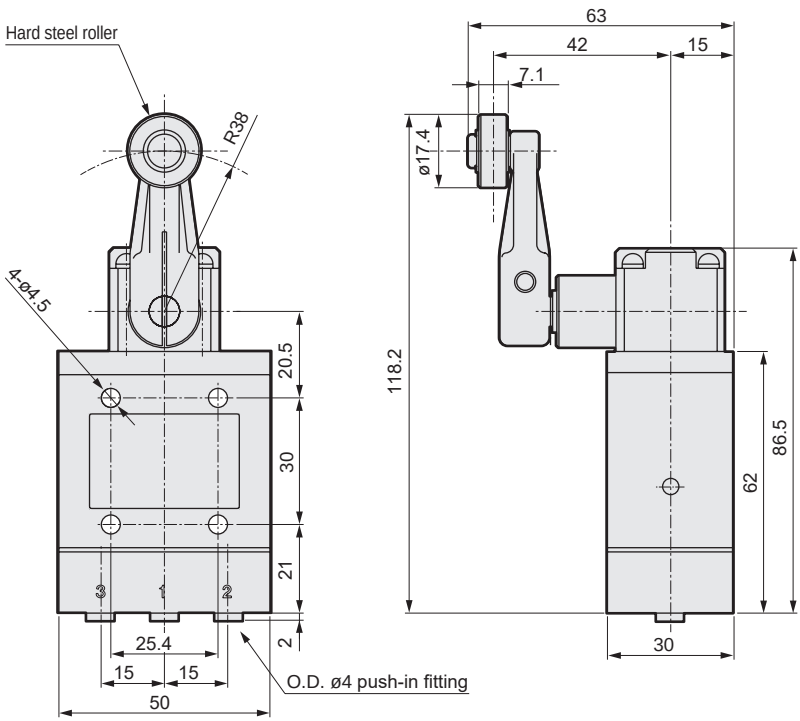

Dimensions: Roller lever (normally closed valve)



JIS symbol

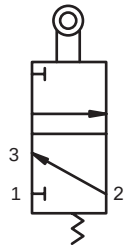

Specifications

Operation code	MM-00-RAC,MM-01-RAC
O.F	9.8 N (when pressurized at 0.49 MPa)
P.T	20°
O.T	30°
T.T	50°

Refer to page 1648 for the actuator operation code.

* The arm fixing method differs from the RAB.

● MM-00-RAC Rc1/8 connection (Weight: 320 g)

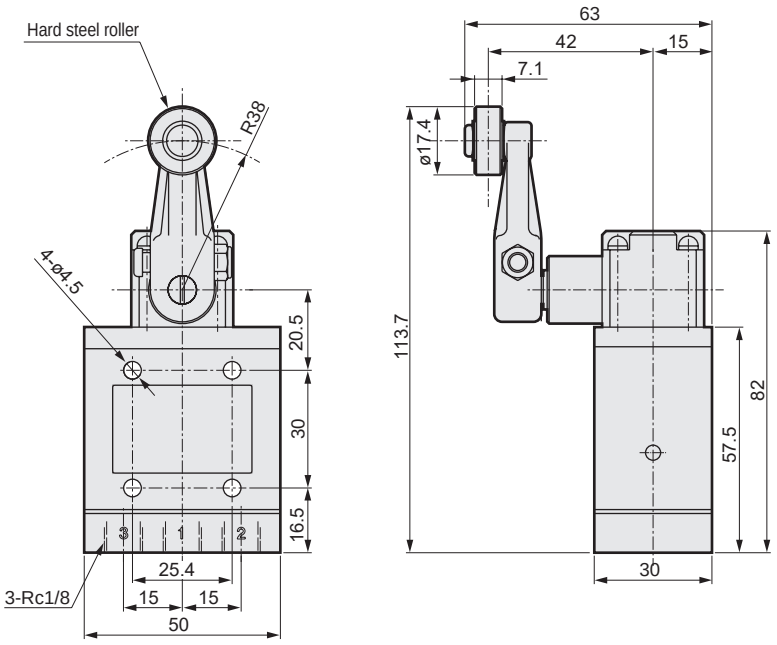

● MM-01-RAC Push-in connection (Weight: 350 g)

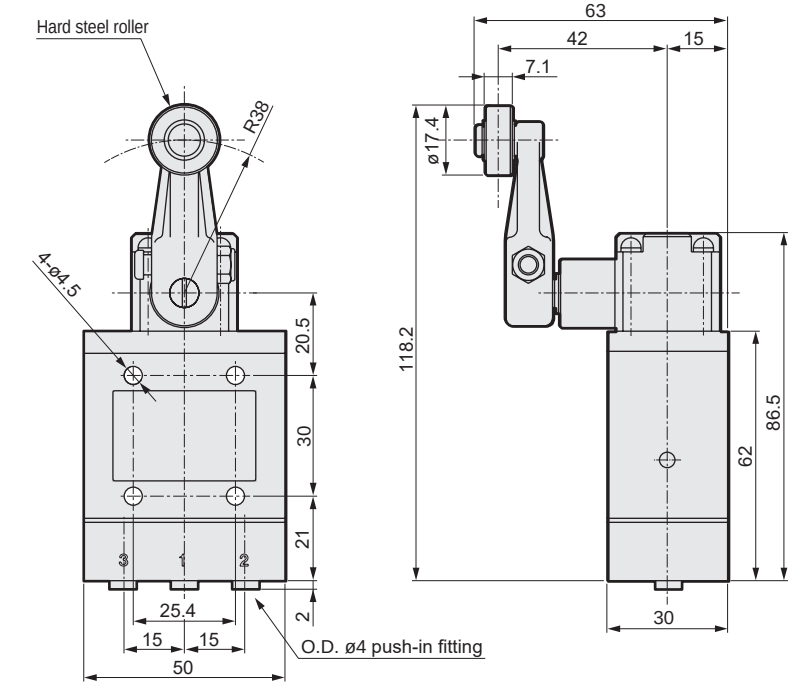

Dimensions: Rod lever (normally closed valve)



JIS symbol

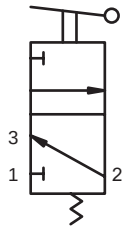

Specifications

Operation code	MM-00-RAD,MM-01-RAD
O.F	2.8 N (when pressurized at 0.49 MPa)
P.T	20°
O.T	30°
T.T	50°

Refer to page 1648 for the actuator operation code.

● MM-00-RAD Rc1/8 connection (Weight: 320 g)

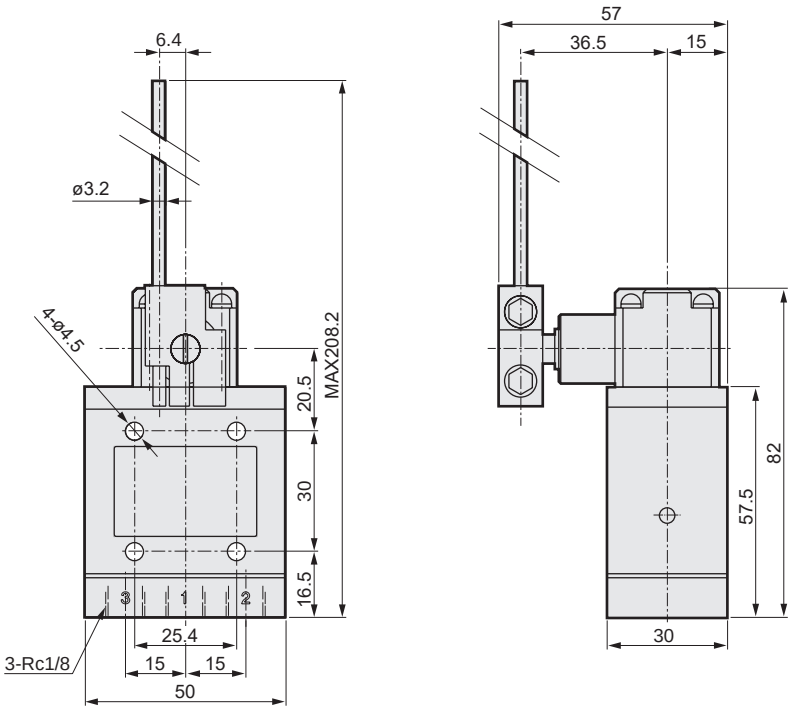

● MM-01-RAD Push-in connection (Weight: 350 g)

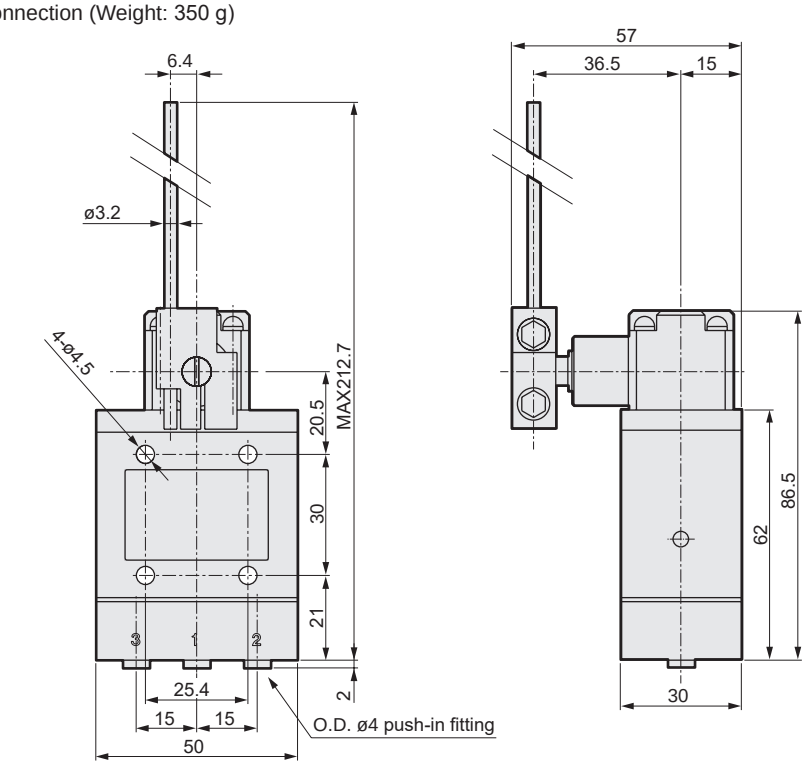

Dimensions: Wire lever (normally closed valve)

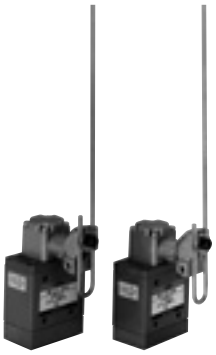

JIS symbol

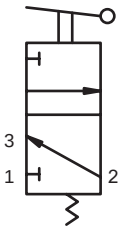

Specifications

Operation code	MM-00-RAE,MM-01-RAE
O.F	1.3 N (when pressurized at 0.49 MPa)
P.T	20°
O.T	30°
T.T	50°

Refer to page 1648 for the actuator operation code.

● MM-00-RAE Rc1/8 connection (Weight: 340 g)

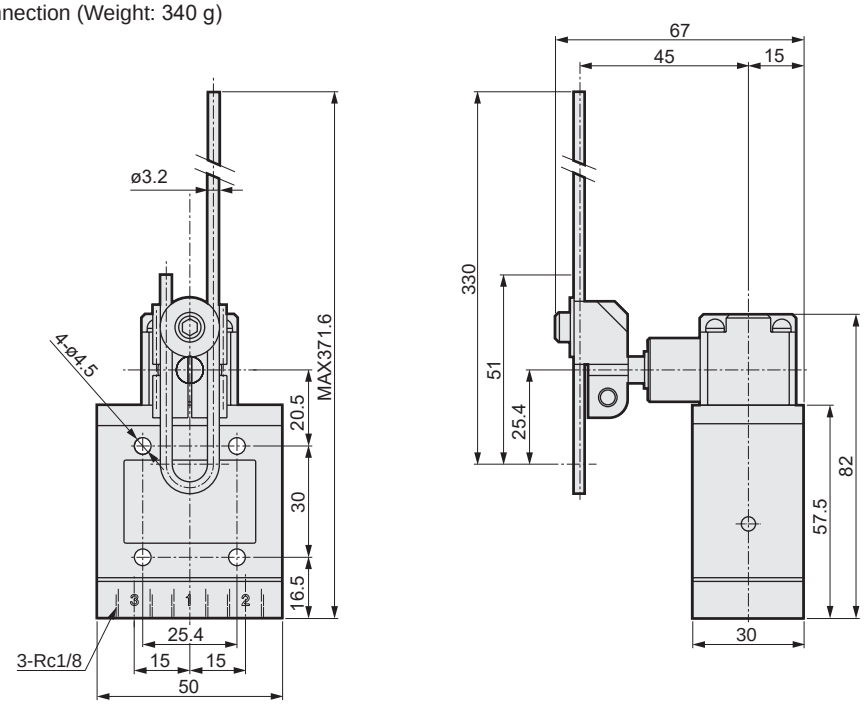

● MM-01-RAE Push-in connection (Weight: 370 g)

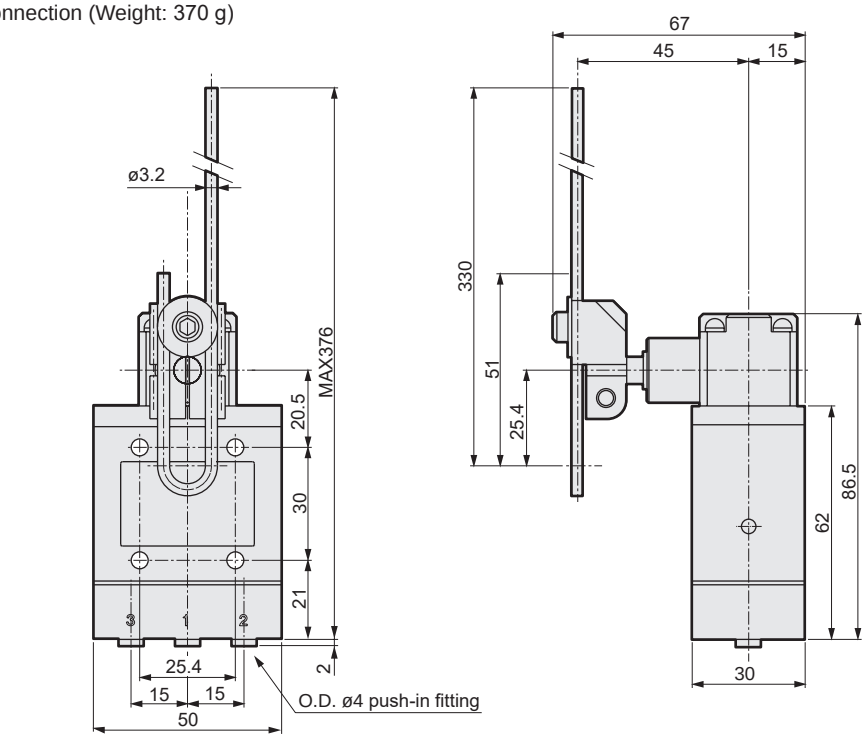

Dimensions: Spring rod (normally closed valve)



JIS symbol

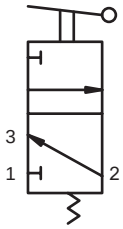

Specifications

Operation code	MM-00-RAF,MM-01-RAF
O.F	1.5 N (when pressurized at 0.49 MPa)
P.T	30°
O.T	20°
T.T	50°

Refer to page 1648 for the actuator operation code.

● MM-00-RAF Rc1/8 connection (Weight: 330 g)

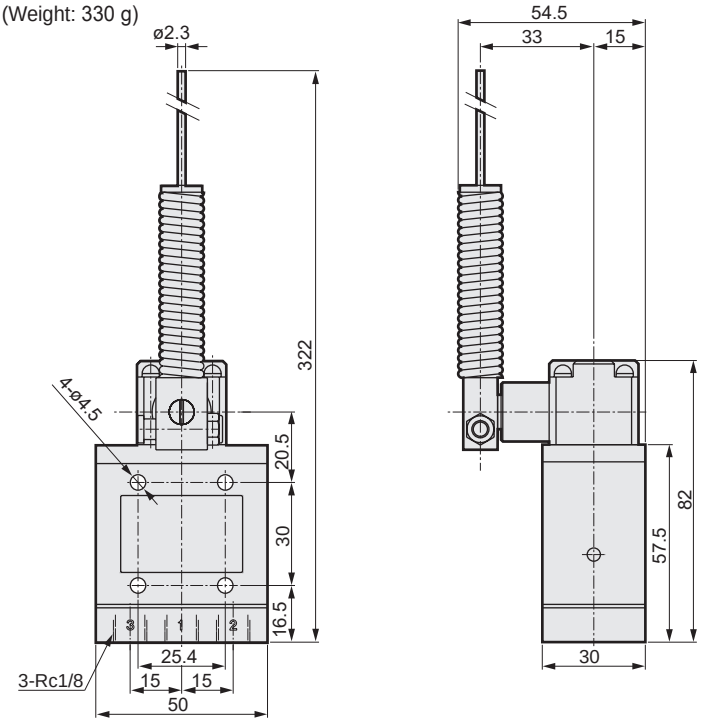

● MM-01-RAF Push-in connection (Weight: 360 g)

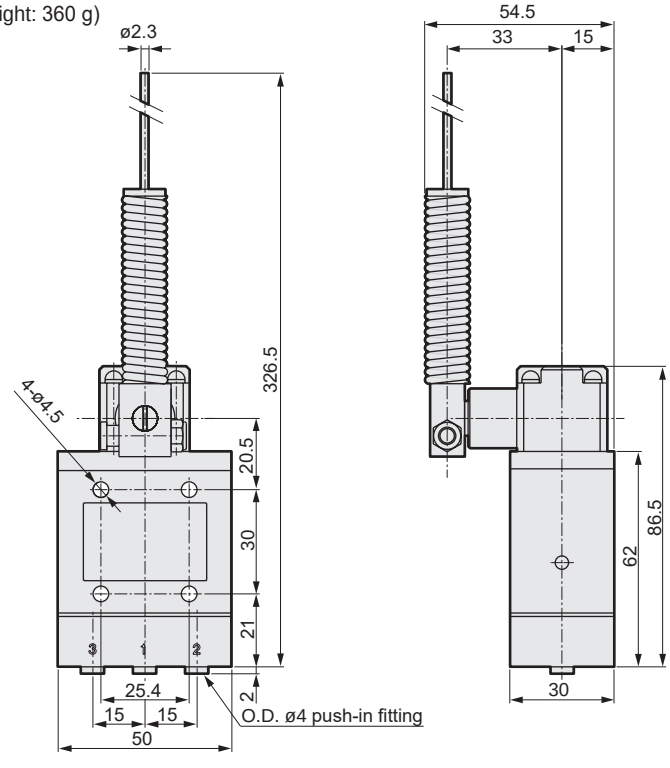

Dimensions: Normally open valve

CAD

JIS symbol



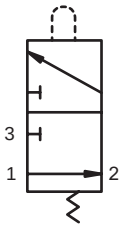

● MM-10-□ Rc1/8 connection
This drawing shows the MM-10-PP

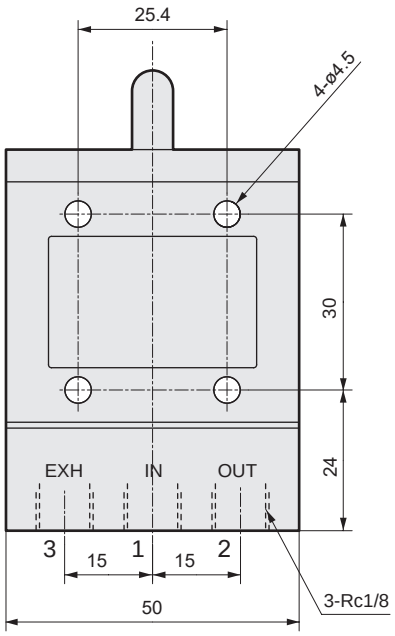

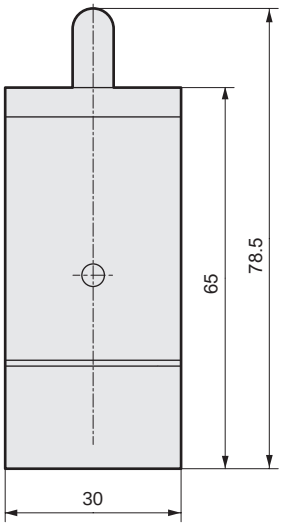

Weight

Model No.	Weight g
MM-10-PP	270
MM-10-RA	330
MM-10-RAA	390
MM-10-RAB	360
MM-10-RAC	360
MM-10-RAD	360
MM-10-RAE	380
MM-10-RAF	370

Dimensions: Normally open valve



JIS symbol

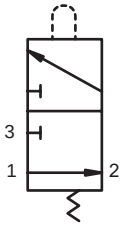

● MM-11-□ Push-in connection
This figure shows the MM-11-PP.

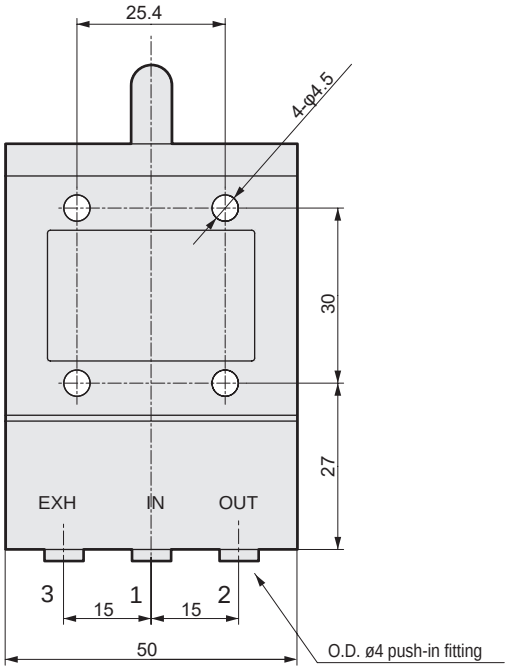

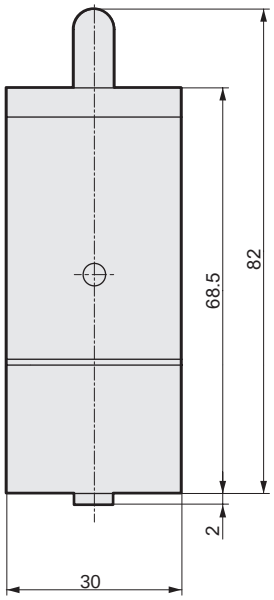

Weight

Model No.	Weight g
MM-11-PP	300
MM-11-RA	360
MM-11-RAA	420
MM-11-RAB	390
MM-11-RAC	390
MM-11-RAD	390
MM-11-RAE	410
MM-11-RAF	400



Large mechanical valve

MAVL Series

This medium size 3-way valve for pneumatic control is equivalent to a vertical limit switch for electric devices and operates with mechanical detection.

● Port size: Rc1/4

Specifications

Item	MAVL Universal
Working fluid	Compressed air
Valve structure	Poppet valve
Min. working pressure MPa	0 (≈0 psi, 0 bar)
Max. working pressure MPa	1.0 (≈150 psi, 10 bar)
Proof pressure MPa	1.5 (≈220 psi, 15 bar)
Port size	Rc1/4
Effective cross-sectional area mm^2	31
Ambient temperature °C	5 (41°F) to 60 (140°F)
Fluid temperature °C	5 (41°F) to 60 (140°F)

Operational explanation drawing

Not operating

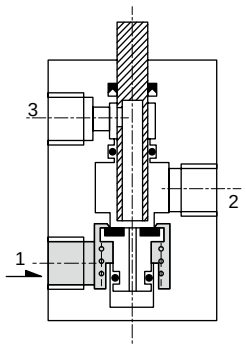

Operating

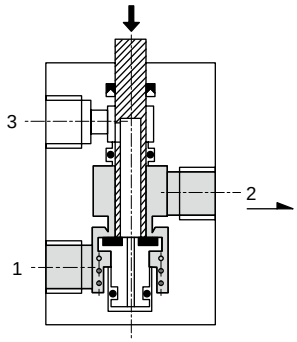

(Content of 3 directions pressurization)
(Applications)
1. Normally closed valve
   Port 1 IN Port 2 OUT Port 3 EXH
2. Normally open valve
   Port 1 EXH Port 2 OUT Port 3 IN
3. Distribution valve
   Port 1 OUT Port 2 IN Port 3 OUT

Internal structure and parts list

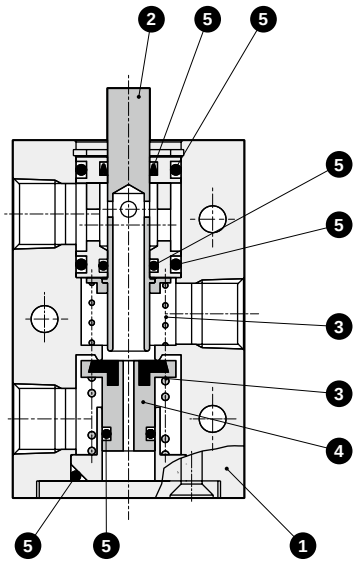

No.	Part	Material
1	Body	Aluminum alloy
2	Spool	Stainless steel
3	Spring	Stainless steel
4	Valve	Nitrile rubber + copper alloy
5	Gasket	Nitrile rubber

Dimensions: Pin plunger (normally closed/normally open)



JIS symbol

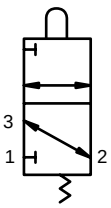

Specifications

Operation code	MAVL-PP
O.F	51.0 N (when NC is pressurized at 0.49 MPa)
	37.3 N (when NO is pressurized at 0.49 MPa)
P.T	3 mm
O.T	2 mm
T.T	5 mm

Refer to page 1648 for the actuator operation code.

● MAVL-PP (weight: 390 g)

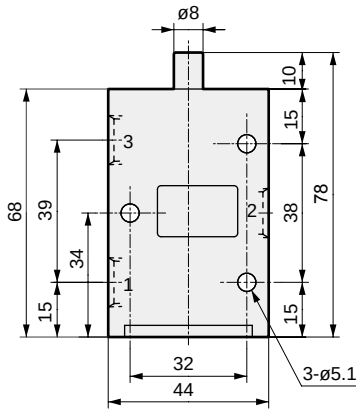

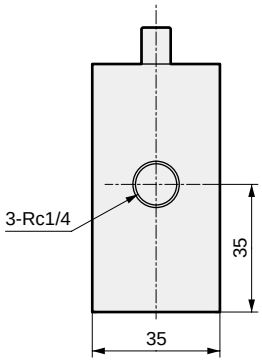

Dimensions: Roller arm (normally closed/normally open)



JIS symbol

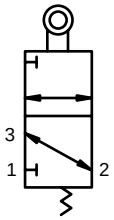

Specifications

Operation code	MAVL-RA
O.F	82.4 N·cm (when NC is pressurized at 0.49 MPa)
	66.7 N·cm (when NO is pressurized at 0.49 MPa)
P.T	25°
O.T	30°
T.T	55°

Refer to page 1648 for the actuator operation code.

● MAVL-RA (weight: 450 g)

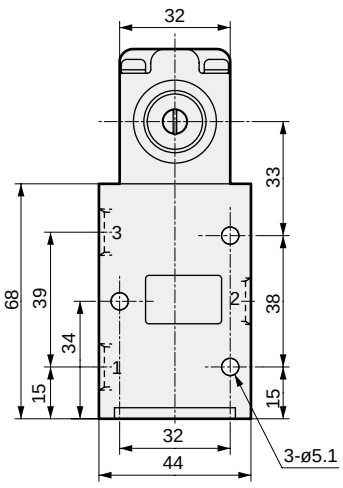

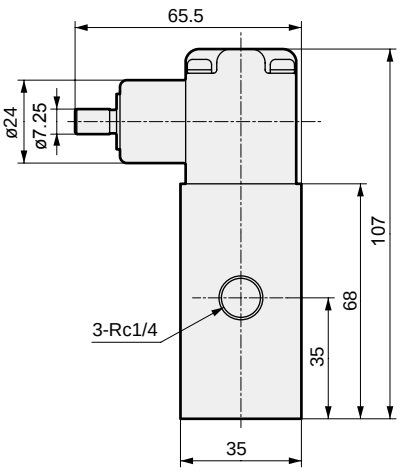

Dimensions: Adjusting roller arm (normally closed/normally open)



JIS symbol

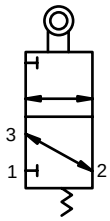

Specifications

Operation code	MAVL-RAA
O.F	9.8 N (when NC is pressurized at 0.49 MPa, arm is at MAX)
	7.9 N (when NO is pressurized at 0.49 MPa, arm is at MAX)
P.T	25°
O.T	30°
T.T	55°
Operation body	Straight cam, low speed cam
	Rotors

Refer to page 1648 for the actuator operation code.

● MAVL-RAA (weight: 510 g)

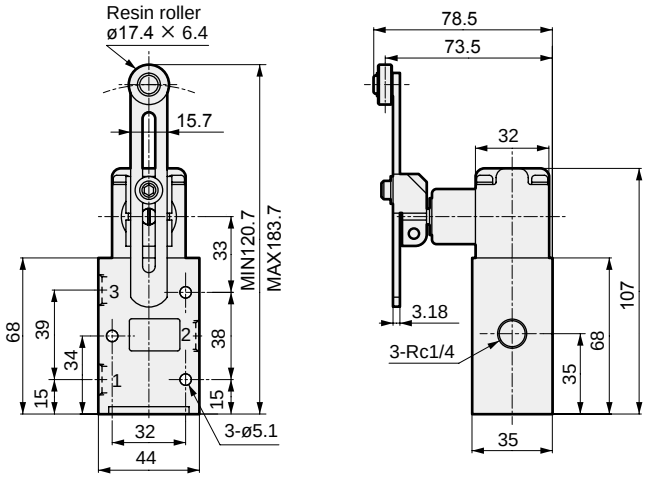

Dimensions: Roller lever (normally closed/normally open)



JIS symbol

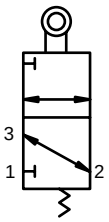

Specifications

Operation code	MAVL-RAB
O.F	21.6 N (when NC is pressurized at 0.49 MPa)
	20.0 N (when NO is pressurized at 0.49 MPa)
P.T	25°
O.T	30°
T.T	55°

* The arm fixing method differs from the RAC.

Refer to page 1648 for the actuator operation code.

● MAVL-RAB (weight: 480 g)

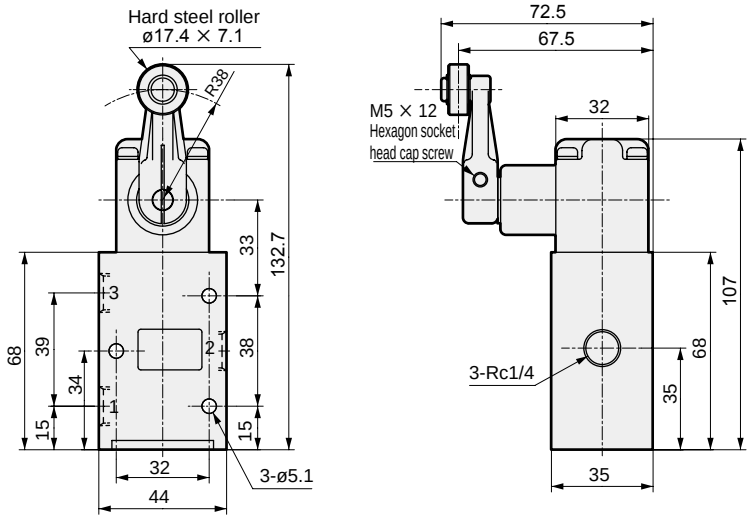

Dimensions: Roller lever (normally closed/normally open)



● MAVL-RAC (weight: 480 g)

JIS symbol

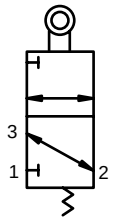

Specifications

Operation code	MAVL-RAC
O.F	21.6 N (when NC is pressurized at 0.49 MPa)
	20.0 N (when NO is pressurized at 0.49 MPa)
P.T	25°
O.T	30°
T.T	55°

* The arm fixing method differs from RAB.

Refer to page 1648 for the actuator operation code.

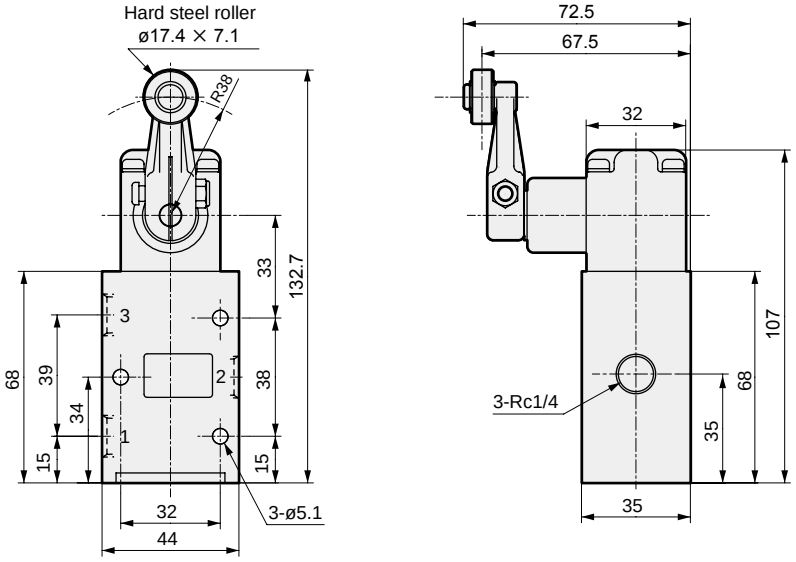

Dimensions: Rod lever (normally closed/normally open)



● MAVL-RAD (weight: 480 g)

JIS symbol

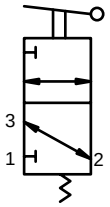

Specifications

Operation code	MAVL-RAD
O.F	4.9 N (when NC is pressurized at 0.49 MPa, arm is at MAX)
	4.0 N (when NO is pressurized at 0.49 MPa, arm is at MAX)
P.T	25°
O.T	30°
T.T	55°

The hard aluminum rod lever can be cut or formed as needed.

Refer to page 1648 for the actuator operation code.

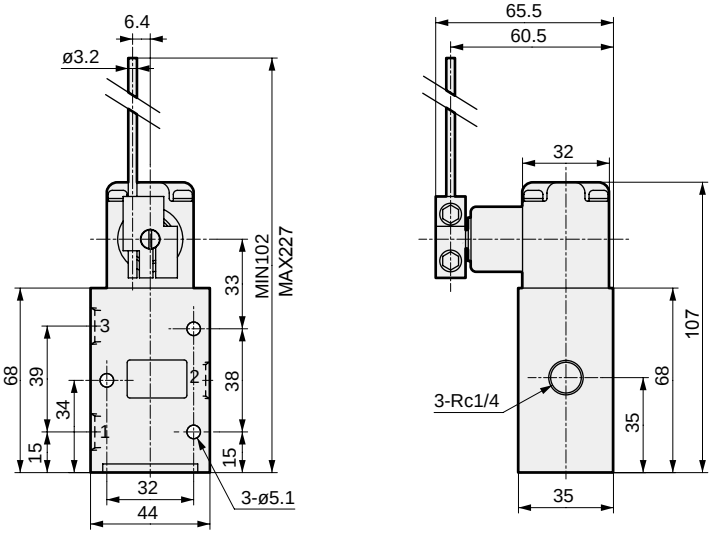

Dimensions: Wire lever (normally closed/normally open)



JIS symbol

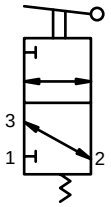

Specifications

Operation code	MAVL-RAE
O.F	1.8 N (when NC is pressurized at 0.49 MPa, arm is at MAX)
	1.2 N (when NO is pressurized at 0.49 MPa, arm is at MAX)
P.T	25°
O.T	30°
T.T	55°

Refer to page 1648 for the actuator operation code.

● MAVL-RAE (weight: 500 g)

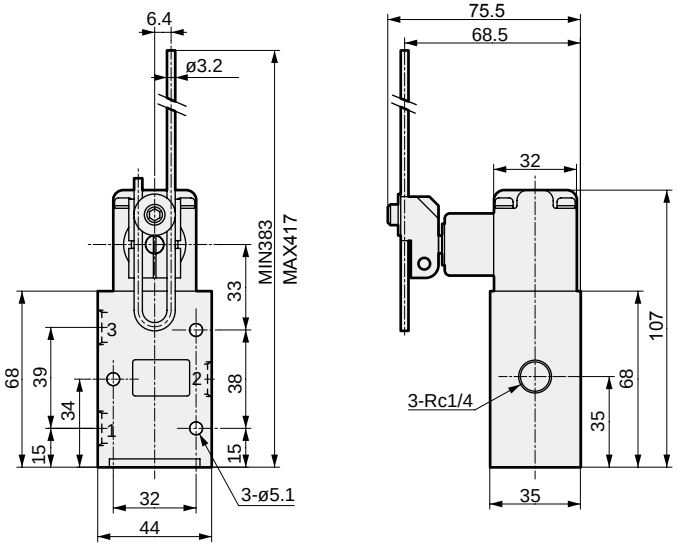

Dimensions: Spring rod (normally closed/normally open)



JIS symbol

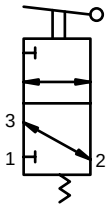

Specifications

Operation code	MAVL-RAF
O.F	3.0 N (when NC is pressurized at 0.49 MPa)
	1.6 N (when NO is pressurized at 0.49 MPa)
P.T	45°
O.T	10°
T.T	55°

Refer to page 1648 for the actuator operation code.

● MAVL-RAF (weight: 490 g)

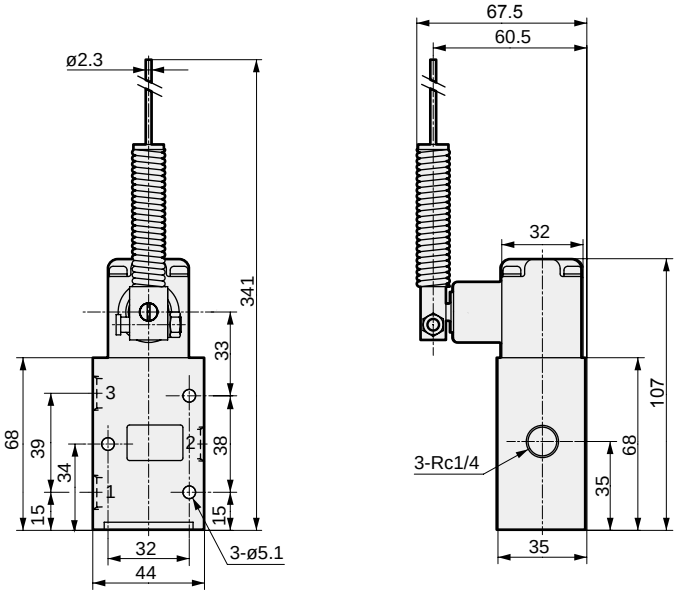

Circuit device (logic valve)

When conducting sequential control by associating several air cylinders, the circuit is assembled with logic valves.
The logic valve is the generic term for small movable fluid control components configuring a circuit.

Logic valve



■ Logic valve

Part name	Model No.	JIS symbol	Page
Air timer	RTD-3A		1644
Pressure switch	PE-1	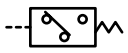	1645
Air lamp	R (red) AL-B (blue) Y (yellow)		1645
Compact air lamp	SAL-R (red) B (blue)		1646

Air timer

RoHS



Specifications

1 MPa = 10 bar

Item	RTD-3A
Working fluid	Compressed air
Working pressure MPa	0.25 (≈36 psi) to 0.8 (≈120 psi)
Pilot pressure MPa	0.25 (≈36 psi) to 0.8 (≈120 psi)
Ambient temperature °C	5 (41°F) to 60 (140°F)
Delay time sec	MAX30
Port	IN port.....No.1 OUT port.....No.3 Pilot port.....No.2
Connection	Push-in
Connection tube	O.D. ø4 nylon tube
Weight g	379

JIS symbol

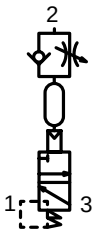

Model No. RTD – 3A

Operational explanation

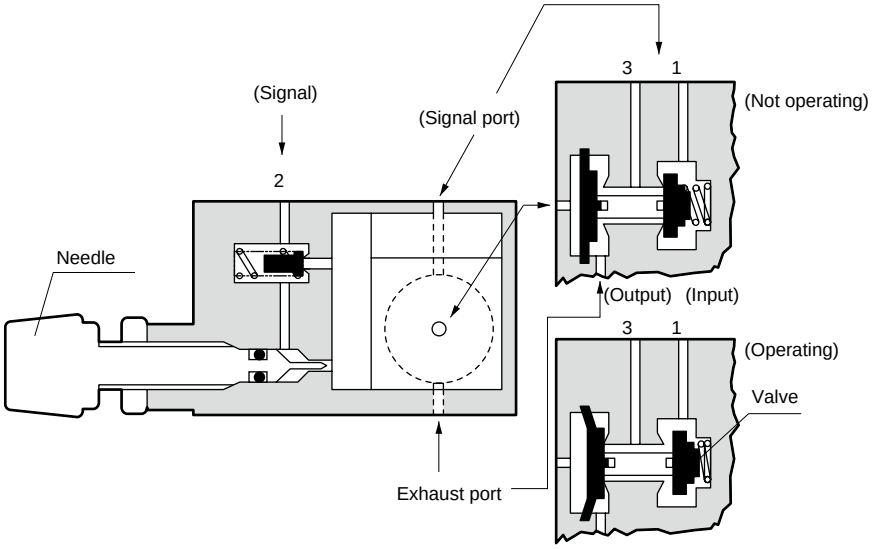

Dimensions

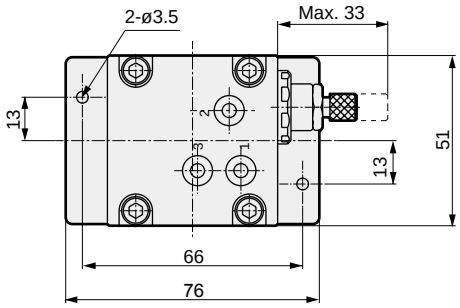

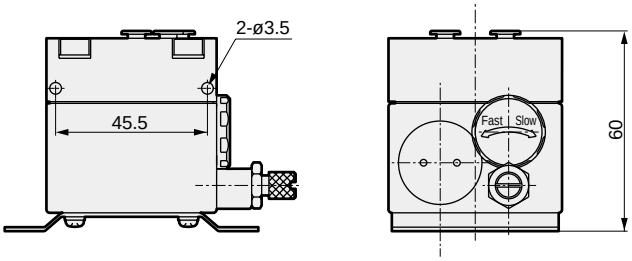

Pressure switch



Specifications

1 MPa = 10 bar

Item	PE-1
Working pressure MPa	0.2 (≈29 psi) to 0.7 (≈100 psi)
Electric capacity	15 A or less...125, 250, 480 VAC 0.5 A or less...125 VDC 0.25 A or less...250 VDC
Connection	O.D. ø4 nylon tube Push-in connection
Weight g	102

JIS symbol

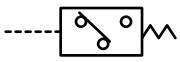

Model No. PE – 1

Dimensions

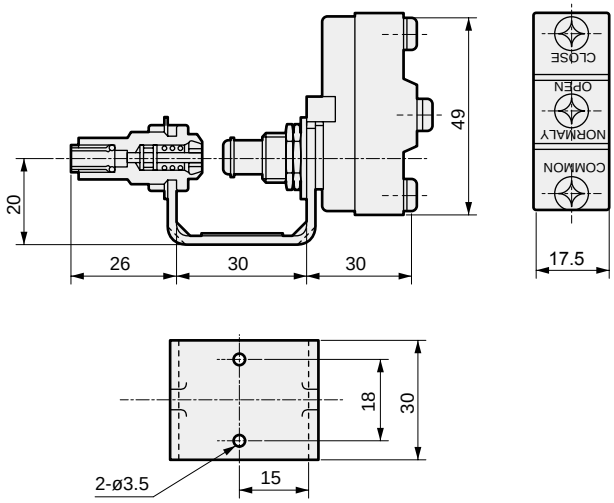

Air lamp



Specifications

1 MPa = 10 bar

Item	AL-R,AL-B,AL-Y
Working pressure MPa	0.05 (≈7.3 psi) to 0.8 (≈120 psi)
Panel	Surface display
Connection	O.D. ø4 nylon tube Push-in connection
Weight g	51

Model No.

AL – R

Display color	
R	Red
B	Blue
Y	Yellow

JIS symbol



Dimensions

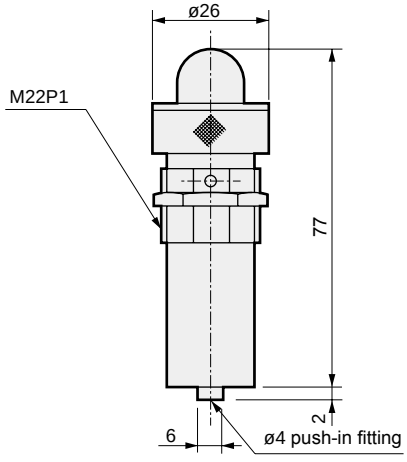

⚠WARNING
Do not attach a pipe wrench, etc., onto the main body (knurled section) and apply excessive force. It could damage the product body.

⚠CAUTION
Do not modify this product. There is a risk of injury and damage.

Compact air lamp

RoHS



Specifications

1 MPa = 10 bar

Item	SAL-R,SAL-B
Working pressure MPa	0.25 (≈36 psi) to 0.8 (≈120 psi)
Connection	Insert into ø4 push-in fitting
Weight g	3.8

Model No.

SAL – R

Display color	
R	Red
B	Blue

JIS symbol



Dimensions

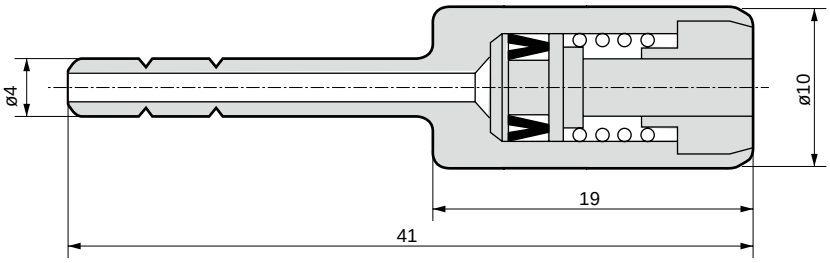

MEMO

Safety Precautions

Be sure to read this section before use.
Refer to Intro Page 63 for precautions for general pneumatic components.

Mounting, installation and adjustment

⚠CAUTION

■ Do not move the component more than the total movement (T.T.).

· Actuator operation codes used in the catalog are shown below.

Code	Explanation
O.F.	Necessary force for operation
P.T.	Action before valve open
O.T.	Action after valve open
T.T.	Total movement

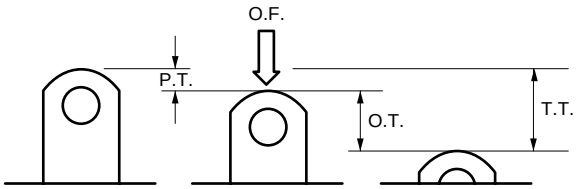

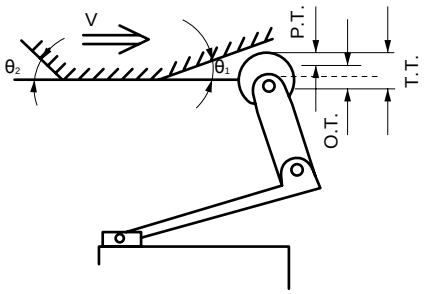

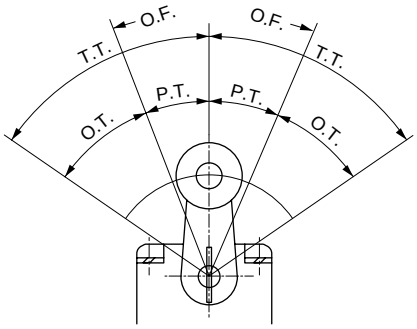

■ Dog

· Set the dog angle θ to 45 degree or less.
· If the dog speed is high, set θ to a small value.
· The dog operation position and depth should be designed to “P.T. + O.T./2”.
· Design the cam and dog so that the lever returns gradually.

(1) V ≤ 0.2 m/s

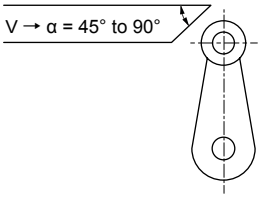

α	Vmax(m/s)
90°	0.05°
75°	0.07°
60°	0.1°
45°	0.2°

(2) V ≤ 0.1 m/s

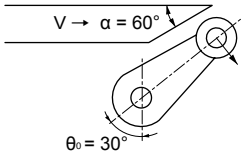

Set the arm parallel to the dog’s cut face so that the force is applied at a right angle to the arm. Generally, α = 60° and θ = 30° are desirable for dog design and arm design.

(3) V ≤ 2 m/s

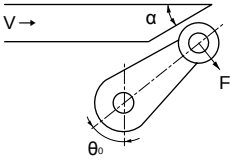

Vmax (max. speed) increases when the angle is reduced. The arm always should be set parallel to the dog’s cut face.

α = 90-θ	Vmax(m/s)
40°	0.7°
35°	0.9°
30°	1.3°
25°	2.0°

(4) When the dog is exceeded (V≤0.2 m/s)

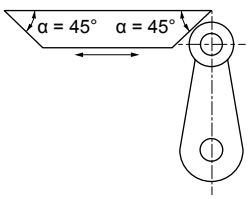

Set the arm perpendicularly so that α = 45°.
V ≤ 0.2 m/s is preferred.

■ Do not use the mechanical valve body as a mechanical stopper.

■ Do not apply excessive force when operating the toggle switch (MS-*-TG).

Manufacturer

Telepneumatic

Total air control systems

Gamma system

■ **Total air systems**



CONTENTS

Series variation	1650
Common specifications	1651
● PLC (PS*)	1652
● Relay (PR*/PL*)	1653
● Relay sub-base (PZU)	1654
● Integrated (logic element) (PL*)	1656
● Line type (logic element) (PL*/PZM)	1657
● Air lamp (PXV)	1658
● Element and sensor (PR*/PX*)	1659
● Pushbutton switch/switch body (separated) (PXB-B3)	1660
● Switch head (ZB4-B)	1661
● Miniature limit switch (PXC-M)	1662
● Compact limit switch (PXC-M)	1663
● Limit switch (PXC-K)	1666
● Rotary head lever actuator (ZCK)	1667
● Limit switch	1668
● Accessory (Silencer/chip)	1670

Series variation

Total air control systems (Gamma system)

The gamma system is a total air system ideal for automating devices that use many pneumatic cylinders. Conditions such as manual override, emergency stop and interlock are easily added using the step-by-step method modular PLC for designing circuits.
(Refer to Gamma System Technical Manual 1/2 (CT-N-35) for details.)

Product group	Features	Page
● PLC elements 	The modular PLC elements are the core of the gamma system. This module element is easily incorporated into a pneumatic sequence circuit and has a memory element in the body and AND and OR elements in the sub-base. ● Main features Cycle display indicator Built-in interlock Manual operation button	Specifications: 1651 1652
● Relay elements 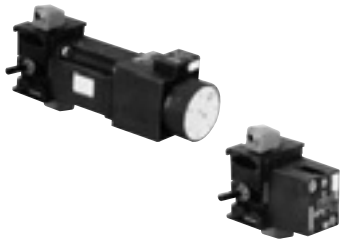	These control elements enable multifunction circuits. ● Diverse product lineup Timer, YES/NOT/AND/OR elements, threshold element, pressure switch, solenoid valve, memory element, booster, amplifier, etc. ● Mount either on a manifold or individually The sub-base can be mounted either individually or on a manifold without changing shape.	Specifications: 1651 1652
● Logic elements 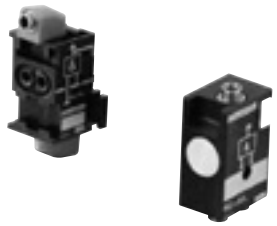	These elements are mainly used when providing several interlocks for operation signals, and are used as a PLC auxiliary circuit arranged on the PLC input or output side. ● Integrated and run types available AND/OR/NOT elements (integrated), AND/OR elements (line type) ● Simple circuit changes possible (integrated) Both cascade and common connections are available by switching selector parts.	Specifications: 1651 1656
● Operation switch and air lamp 	The operation switch elements send signals such as start and stop. The air lamp elements indicate the presence of pneumatic signals. ● Diverse product lineup Select the type ideal for your application. ● Main features Stable snap action with small operating force Push-in fitting for ø4 tube built-in Air counter for pneumatic pulses provided	Specifications: 1651 1658
● Sensing element 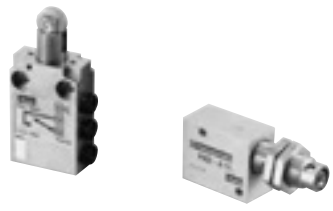	These elements send actuator operation confirmation and object detection signals, etc. ● Diverse product lineup A variety of limit switches and sensors are available to handle a wide range of applications ● Main features Stable snap action with small operating force Push-in fitting for ø4 tube built-in	Specifications: 1651 1662

Common specifications

Item	Specifications
Working fluid	Compressed air (no lubrication)
Max. working pressure MPa *1	0.8 (≈120 psi, 8 bar)
Min. working pressure MPa	0.3 (≈44 psi, 3 bar)
Fluid temperature °C	5 (41°F) to 60 (140°F)
Ambient temperature °C *2	0 (32°F) to 60 (140°F) (no freezing)
Effective cross-sectional area mm² *3	2
Port size	ø4
Compatible tube	O.D. ø4.0, I.D. ø2.5, hard nylon tube, soft nylon tube F-1504

*1: The max. working pressure of the air counter (PCT, PCP) is 0.6 MPa.
*2: The ambient temperature range for the solenoid valve PRS is 0 to +40°C.
*3: The effective cross-sectional area of the limit switch (miniature) is 0.7 mm².

PLC

Appearance	Symbol	Part name	Model No.	Weight (kg)
		PLC element		
		● With manual button	PSM-A12	0.175
		With push-in swivel fitting		
		With indicator		
		Body only	PSM-A10	0.135
		Sub-base only	PSB-A12	0.040
		PLC sub-base V type		
		● With push-in swivel fitting	PSV-A12	0.045
		PLC AND element		
		● With push-in swivel fitting	PSL-A12	0.035
		With indicator		
		PLC I/O block		
		● With push-in swivel fitting	PSE-A12	0.080
		With port P indicator		
		PLC branch block		
		● With push-in swivel fitting	PSD-A12	0.050
		● R type	PSD-B12	0.050
		(Port R signal braking)		



● PSM-A12



● PSV-A12



● PSL-A12



● PSE-A12



● PSE-A12



● PSD-A12



● PSD-B12



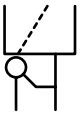

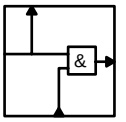

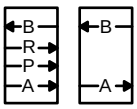

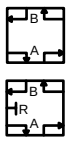

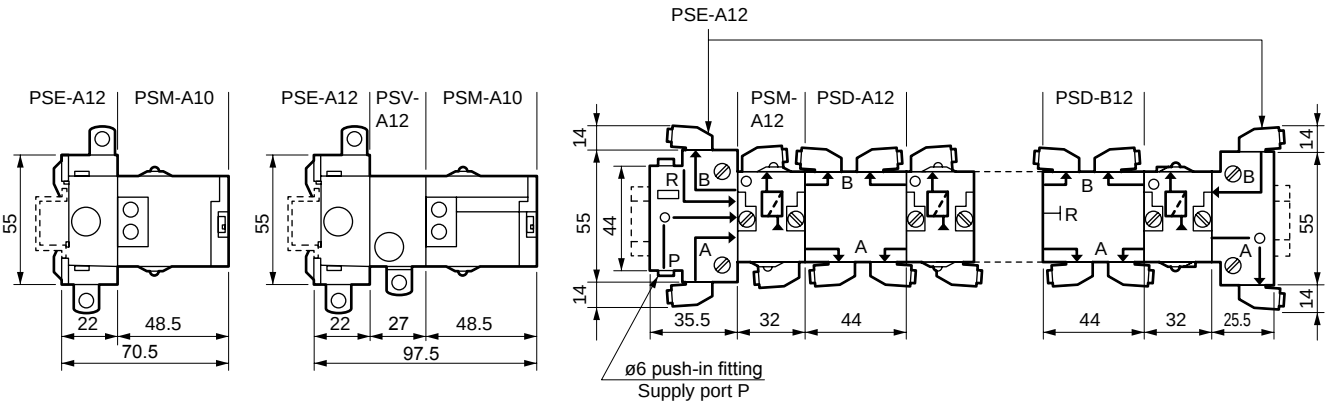

● Note: Use a ø6 tube for the supply port P and ø4 tubes for all other ports.

Relay

Appearance	Symbol	Part name	Model No.	Weight (kg)
 ● PRT-A12	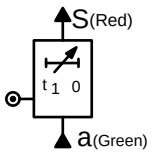	Timer (on-delay) ● With sub-base push-in swivel fitting		
		● 0.1 to 3 sec	PRT-E12	0.165
		● 0.1 to 30 sec	PRT-A12	0.165
		● 10 to 180 sec	PRT-B12	0.165
	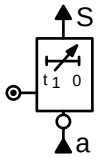	Timer (off-delay)		
		● 0.1 to 3 sec	PRT-F12	0.165
		● 0.1 to 30 sec	PRT-C12	0.165
		● 10 to 180 sec	PRT-D12	0.165
 ● PLJ-C12	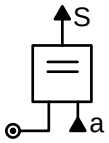	YES element		
		● With sub-base push-in swivel fitting With push-in swivel fitting (Operation) Output S is issued when there is signal a.	PLJ-C12	0.065
 ● PLL-C12	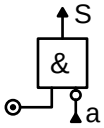	NOT element		
		● With sub-base push-in swivel fitting (Operation) Output S is issued when there is no signal a.	PLN-C12	0.065
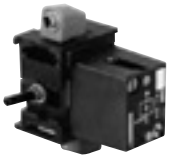 ● PLN-C12	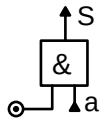	AND element		
		● Sub-base push-in swivel fitting	PLL-C12	0.065
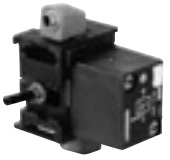 ● PLK-C12	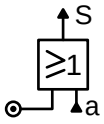	OR element		
		● Sub-base push-in swivel fitting	PLK-C12	0.065
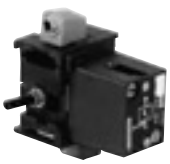 ● PLN-D12	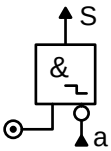	Threshold element		
		● With sub-base push-in fitting Output S is issued when there is no signal a. Note that signal a does not function until pressure is extremely low.	PLN-D12	0.065

⚠ Cautions for relay

All relay sub-bases are based on PZU-A12. If the sub-base PZU-C12 is required, order the body and sub-base separately.
When ordering only the relay body, change the suffix of the model No. from 12 to 10.
For the sub-base relay P□-□12 other than on-delay timer PRT-A12 and threshold element PLN-D12, the body P□-□10 and sub-base PZU-A12 are shipped in separate containers.

On-delay timer: Output S is issued after signal a is input and the set time has elapsed.
Off-delay timer: Output S is constantly issued. Output S stops when signal a is input and the set time has elapsed.

Relay

Appearance	Symbol	Part name	Model No.	Weight (kg)
 ● PRE-A12	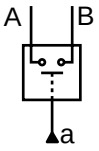	Pressure switch		
		● With sub-base push-in swivel fitting With manual button Contact capacity (resistance load) 600 V/10 A	PRE-A12	0.130
 ● PRS-A121$^{F}_{M}$	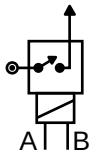	Solenoid valve		
		● With sub-base push-in swivel fitting With manual button	PRS-A121F(110 VAC) PRS-A121M(220 VAC)	0.165 0.165
 ● PLM-A12  ● PLM-A10	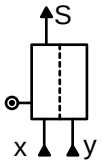	Memory element		
		● With sub-base push-in swivel fitting ● No sub-base	PLM-A12	0.185
		Output S is issued at signal X (setting) Reset at signal y (resetting).	PLM-A10	0.135

Relay sub-base

Appearance	Symbol	Part name	Model No.	Weight (kg)
 ● PZU-A12	A type 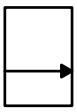	3 port sub-base		
		● A type	PZU-A12	0.040
		● C type	PZU-C12	0.045
 ● PZU-E12  ● PZU-C12	C type 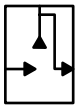	4 port sub-base		
		● With push-in swivel fitting	PZU-B12	0.050
 ● PZU-B12	With push-in swivel fitting 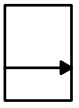	Input block		
● Applicable to 3 port sub-base YES element NOT element AND element OR element Pressure switch Solenoid valve Timer Threshold element Booster ● Applicable to 4 port sub-base Memory element Amplifier	Input block 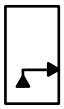	● Input block	PZU-E12	0.045

⚠ Cautions for relay

For the sub-base relay P□-□12 other than on-delay timer PRT-A12 and threshold element PLN-D12, the body P□-□10 and sub-base PZU-A12 are shipped in separate containers.

Manifold installation dimensions

Mounting dimensions

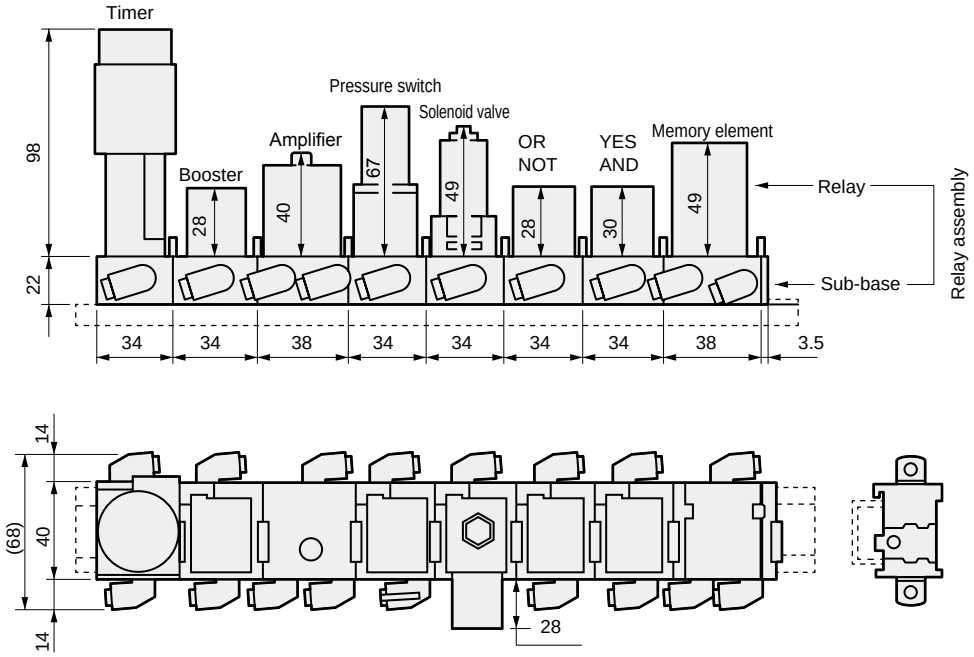

● The above drawing is an example of relay elements installed on the sub-base with a push-in swivel fitting.

Sub-base installation dimensions

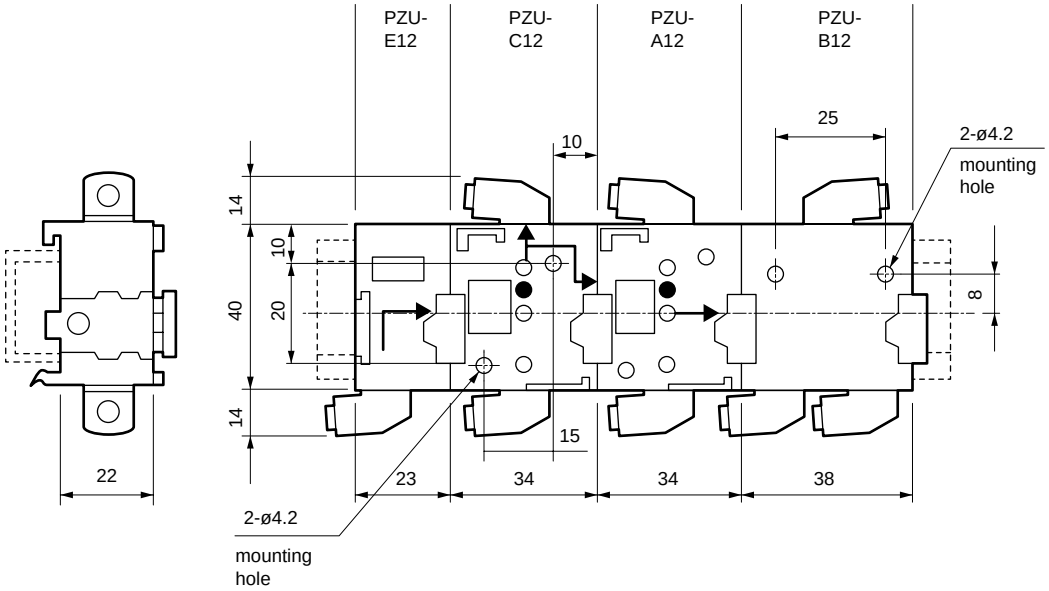

● Use ø4 tubes for all connection ports.
● Can be attached to the rail in a single touch.
● For mounting rails, use those (35 mm width) that conform to the DIN standard.
(DIN rail for pneumatic valves MN4GA and 4GB Series can be purchased.)

Integrated (logic element)

Appearance	Symbol	Part name	Model No.	Weight (kg)
● PLE-B12		Side block		
		● With push-in swivel fitting	PLE-B12	0.075
● PLL-B12	S, &, a, b	AND element		
		● With push-in swivel fitting (Operation) Output S is issued when both signals a and b are input.	PLL-B12	0.080
● PLK-B12	S, ≥1, a, b	OR element		
		● With push-in swivel fitting (Operation) Output S is issued when signal a or b, or both are input.	PLK-B12	0.080
● PLN-B12	S, &, a, b	NOT element		
		● With push-in swivel fitting (Operation) Output S is issued when signal b is input and signal a is not.	PLN-B12	0.080

Mounting dimensions

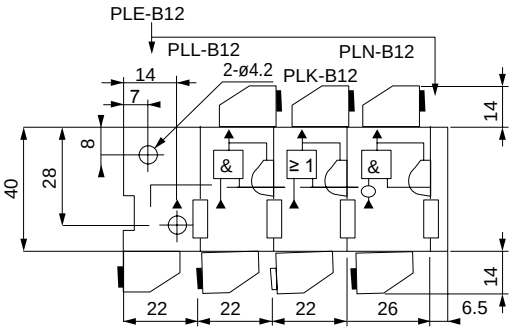

● Use ø4 tubes for all connection ports.

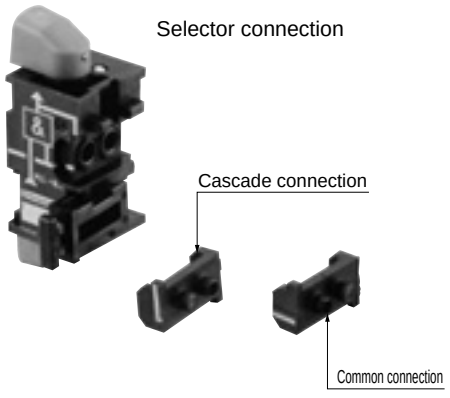

The integrated element is connected through a selector.
The following two methods are used.
1) Cascade line connection
2) COM line connection

Using the selector
The integrated element is connected through a selector.
The following two methods are used.
1. Cascade connection
When the element selector is set in a cascade state, it is internally connected to inside board b. The circuit is called a cascade circuit when all elements are set in a cascade state.
2. Common connection
When the element selector is set in a common connection state, each element's inside board b is connected straight. The circuit is called a common input circuit when all elements are connected in a common state.

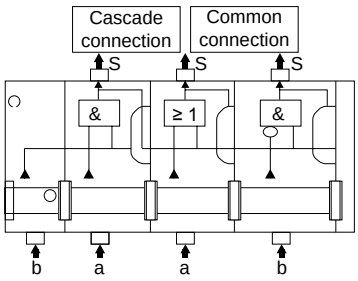

Line type (logic element)

Appearance	Symbol	Part name	Model No.	Weight (kg)
		AND element		
 ● PLL-A11	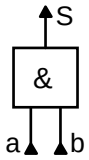	● With push-in fitting	PLL-A11	0.065
		OR element		
 ● PLK-A11	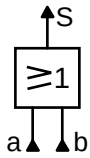	● With push-in fitting	PLK-A11	0.065
		Mounting bracket (including mounting screws)		
 ● PZM-L199		● Used for rail installation.	PZM-L199	0.015

Mounting dimensions

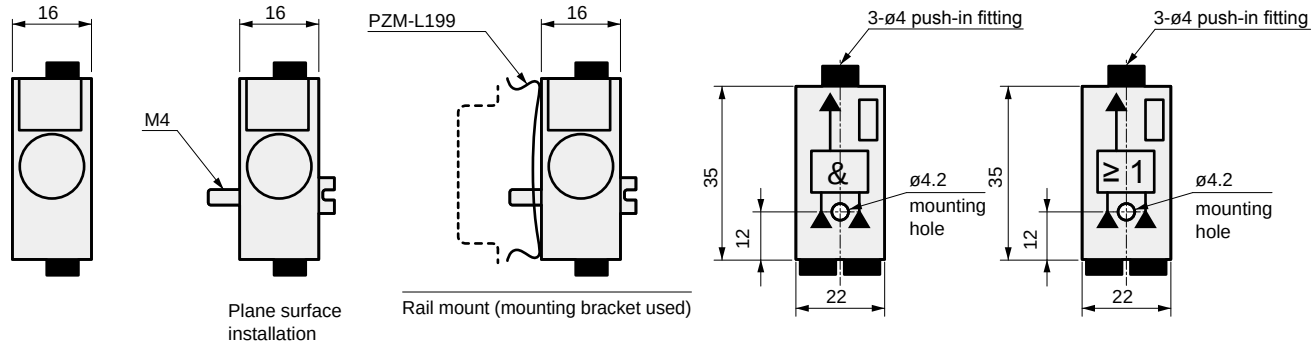

Air lamp

Appearance	Type of color		Model No.	Weight (kg)
 ● PXV-M1 ☐	Air lamp			
	● Green	with push-in fitting	PXV-M131	0.085
	● Orange	with push-in fitting	PXV-M141	0.085
	● Yellow	with push-in fitting	PXV-M151	0.085

Installation explanation

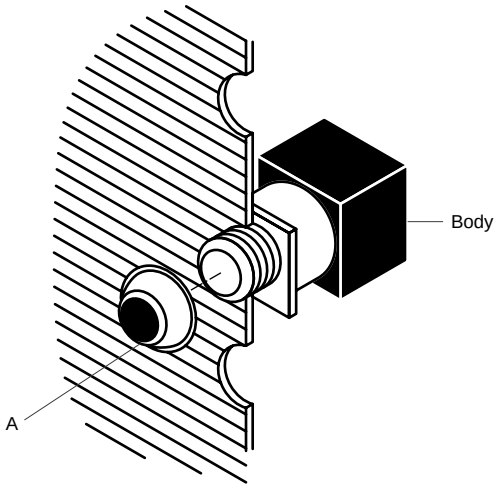

When installing on a panel, turn lens (A) to the left to remove it. Insert the body from the back of the panel, then turn lens (A) to the right to fix it in place.

* Colors shown above are used when supplying air.

Mounting dimensions

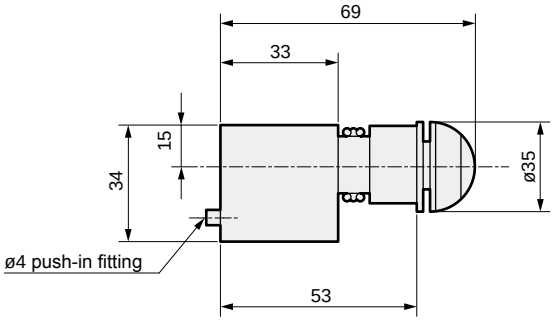

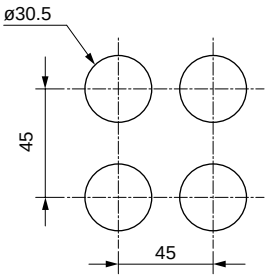

(Mounting hole plate thickness: t1.5 to 6)

Element and sensor

Appearance	Symbol	Part name	Model No.	Weight (kg)
● PRF-A12 	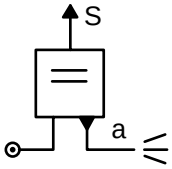	**Booster**		
		● With sub-base push-in swivel fitting Booster signal a is connected to the limit sensor on the machine. Booster output S is issued by closing the bleed hole on the end of the limit sensor.	PRF-A12	0.070
● PXF-A111  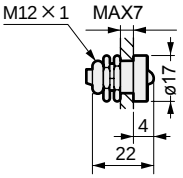		**Limit sensor touch type**		
		● Push-in fitting	PXF-A111	0.030
● PXF-A121  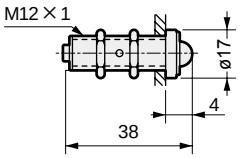		**Limit sensor ball roller**		
		● Push-in fitting	PXF-A121	0.035
● PXF-A131  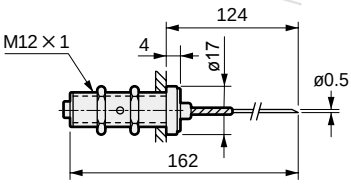		**Limit sensor wire**		
		● Push-in fitting	PXF-A131	0.035
● PRD-A12 	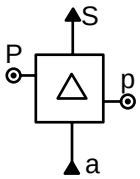	**Amplifier**		
		● With sub-base push-in swivel fitting With manual button Fine pressure signal a from the proximity sensor, etc., is amplified to the supply pressure to issue output S.	PRD-A12	0.175
		Proximity sensor		
● PXD-A111  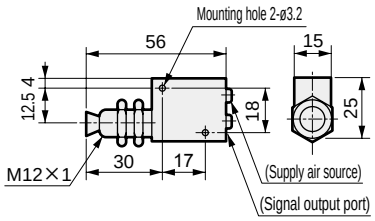		● Push-in fitting	PXD-A111	0.060

⚠ Element and sensor cautions The body PRF-A10 and sub-base PZU-A12 are shipped in separate containers for the booster PRF-A12.
The body PRD-A10 and sub-base PZU-B12 are shipped in separate containers for the amplifier PRD-A12.

Pushbutton switch/switch body (separated)

Outline drawing	Symbol	Part name	Model No.		Weight (kg)
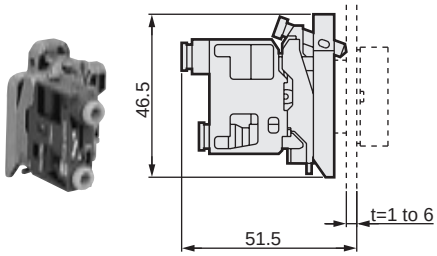 ● Switch body with installation base	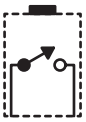	Discrete switch body NC (with switch head installation base)			
		● Flow rate 60 ℓ/min. (ANR) (at pressure of 0.6 MPa)	PXB-B	3111B	0.048
	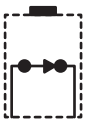	Discrete switch body NO (with switch head installation base)			
		● Flow rate 60 ℓ/min. (ANR) (at pressure of 0.6 MPa)	PXB-B	3121B	0.048
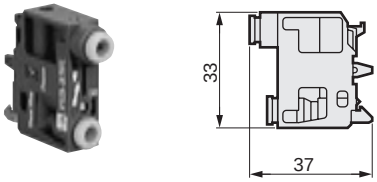 ● Switch body only	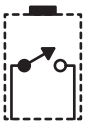	Only switch body NC			
		● Flow rate 60 ℓ/min. (ANR) (at pressure of 0.6 MPa)	PXB-B	3911	0.010
	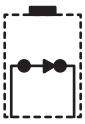	Only switch body NO			
		● Flow rate 60 ℓ/min. (ANR) (at pressure of 0.6 MPa)	PXB-B	3921	0.010

Safety Precautions

◆ Installing on and removing from the panel

Mounting

(1) With the arrow facing up, push in the switch head from the front of the panel.
(2) Push in the switch body, aligning the arrow on it with the arrow on the switch head.
(3) Tighten the fixing screw on the bottom. (Tightening torque: Max. 0.8 N·m)

Removal:^p(4)Loosen the fixing screw on the bottom.

(5) Lift up the switch body hook with a flathead screwdriver.
(6) Pull out the entire switch body.

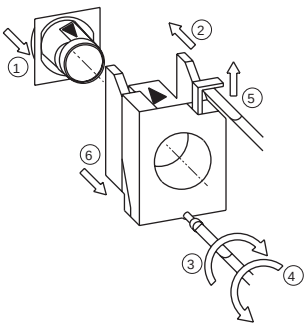

◆ Installing and removing the switch body on/from the installation base

Mounting

(1) Align the protrusion on the bottom of the switch body with the groove on the bottom of the mounting base.
(2) Push in the top part until it clicks.

Removal:^p(3)Lift up the bracket on the top of the switch body with a flathead screwdriver.

(4) Remove the switch body.

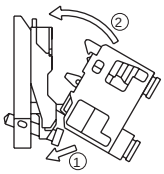

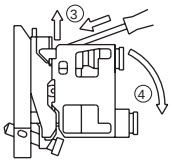

◆ Minimum panel cut dimension

Panel plate thickness: 1 to 6 mm

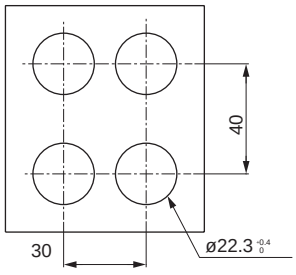

Model No. of push button

Model No. of only switch body: PXB-B *1
Model No. of only switch head: ZB4-B *2
Model No. of switch combination: PXB-B *1 *2

PXB-B *1 *2

Switch head (separated)

◇ Pushbutton head

Outline drawing	Type	Actuation	Color	Model No.		Weight (kg)
● Flat  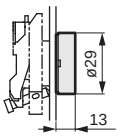	Flat shape	Momentary (Automatic return)	Black	ZB4-B	A2	0.029
			Green	ZB4-B	A3	0.029
			Red	ZB4-B	A4	0.029
			Yellow	ZB4-B	A5	0.029
● Protrusion  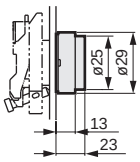	Extension	Momentary (Automatic return)	Black	ZB4-B	L2	0.030
			Green	ZB4-B	L3	0.030
			Red	ZB4-B	L4	0.030
			Yellow	ZB4-B	L5	0.030
● Dust-proof  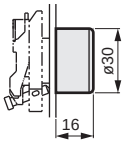	Dust-proof	Momentary (Automatic return)	Black	ZB4-B	P2	0.031
● Mushroom  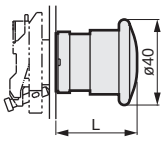	Mushroom (Head diameter ø40 mm)	Momentary (Automatic return)	Black	ZB4-B	C2	0.072
			Green	ZB4-B	C3	0.072
			Red	ZB4-B	C4	0.072
			Yellow	ZB4-B	C5	0.072
		Latch, push/pull	Red	ZB4-B	T84	0.078
		Latch, turn/release	Red	ZB4-B	S844	0.073
● Large mushroom  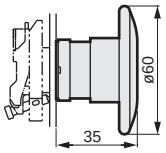	Large mushroom (Head diameter ø60 mm)	Momentary (Automatic return)	Black	ZB4-B	R2	0.093

Model No.	L
ZB4-BC□	32
ZB4-BT84	38.5
ZB4-BS844	39.5

◇ Selector head

Outline drawing	Type	Actuation		Model No.		Weight (kg)
● Standard handle  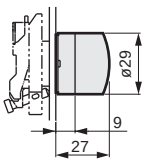	Standard handle, black	2-position self-hold		ZB4-B	D2	0.044
		3-position self-hold		ZB4-B	D3	0.044
● Long handle  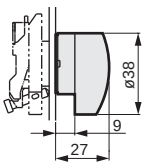	Long handle, black	2-position self-hold		ZB4-B	J2	0.044
		3-position self-hold		ZB4-B	J3	0.044
		3-position automatic return		ZB4-B	J5	0.044
		3-position left side automatic reset/ right side self-hold		ZB4-B	J7	0.044
● Select type with key  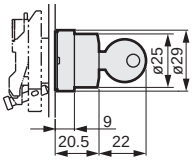	Select type with key	2-position self-hold		ZB4-B	G2	0.069
		2-position self-hold		ZB4-B	G4	0.069

indicates the key release position.

Model No. of switch body and switch head combination
(Example) Combination of discrete switch body NC and
mushroom redhead Model No.: PXB-B3111BC4.

Miniature limit switch

Appearance	Code	Part name	Model No.	Weight (kg)
 ● PXC-M111		Plunger push-in fitting		
		Direct acting 3-port valve NC EXH is released into the atmosphere. JIS symbol 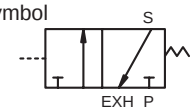	PXC-M111	0.030
 ● PXC-M121		Roller lever push-in fitting		
			PXC-M121	0.040
 ● PXC-M521		Roller lever		
			PXC-M521	0.060

Attachment for PXC-M111

Appearance	Code	Part name	Model No.	Weight (kg)
 ● PXC-Z11		Roller lever		
			PXC-Z11	0.008

Compact limit switch

Appearance	Symbol	Part name	Model No.	Weight (kg)
 ● PXC-M601A110		Plunger Direct acting 3-port valve NC. JIS symbol 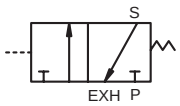	PXC-M601A110	0.150
 ● PXC-M601A102		Roller plunger	PXC-M601A102	0.160
 ● PXC-M601A103		Cross roller plunger	PXC-M601A103	0.160

Attachment

Appearance	Symbol	Part name	Model No.	Weight (kg)
 ● XCM-Z24		One way roller lever	XCM-Z24	0.080

Compact limit switch specifications

Specifications

Item	PXC-M601A110	PXC-M601A102	PXC-M601A103	PXC-M601A110 +XCM-Z24	PXC-M111	PXC-M121	PXC-M521
Max. operating speed	0.5 m/s	0.1 m/s	0.1 m/s	0.5 m/s	0.5 m/s	1.0 m/s	1.0 m/s
Operating distance: A *1	1.7 mm	1.7 mm	1.7 mm	9.4 mm(A)	0.9 mm	2.0 mm	2.2 mm
Max. distance: B	5.0 mm	5.0 mm	5.0 mm	-	1.4 mm	3.2 mm	5.8 mm
Return distance	0.3 mm	0.2 mm	0.2 mm	1.2 mm(A)	0.15 mm	0.3 mm	0.5 mm
Min. operating force *1	24 N	23 N	23 N	19 N	11 N	4.5 N	7 N
	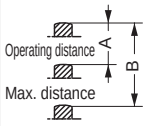	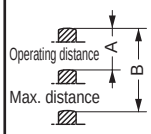	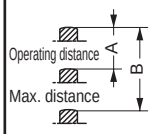	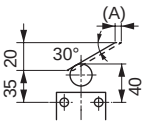	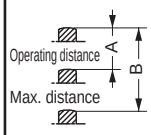	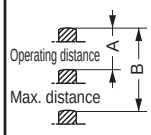	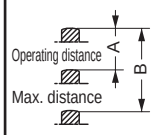

*1: Value at supply pressure of 0.6 MPa.

Compact limit switch

Dimensions

● PXC-M601A102

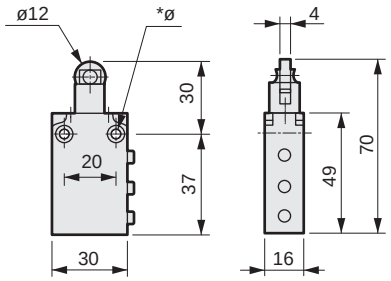

● PXC-M601A103

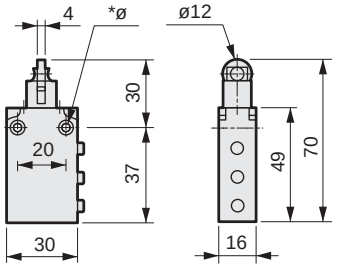

● PXC-M601A110

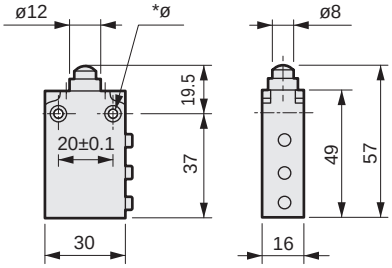

● PXC-M601A110+
XCM-Z24

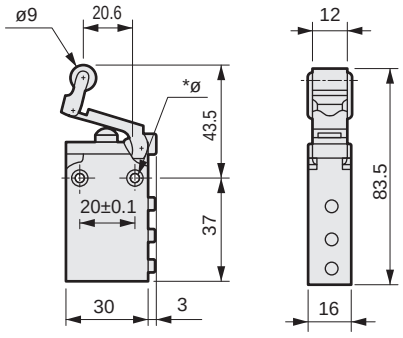

* ø hole detailed dimensions
2-ø4.3 through
2-spot face diameter ø8.2
spot face depth 4

● PXC-M111

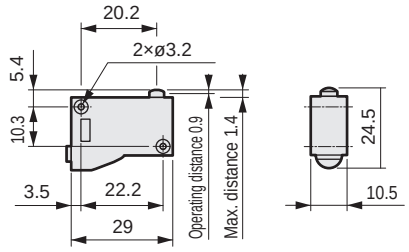

● PXC-Z11

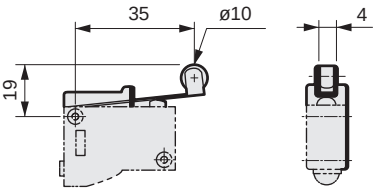

● PXC-Z12

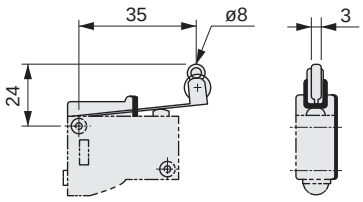

● PXC-M121

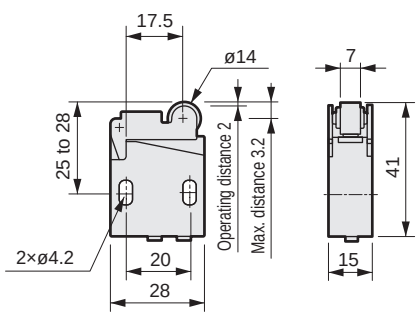

● PXC-M521

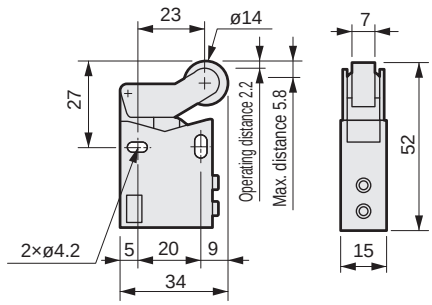

Limit switch

Appearance	Part name	Model No.		Weight (kg)
 ● PXC-K211	NC			
	● Push-in fitting pilot operated 3-port valve NC.	PXC-K	211	0.32
 JIS symbol 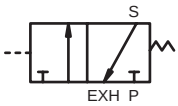				
 ● PXC-K221	NO			
	● Push-in fitting pilot operated 3-port valve NO.	PXC-K	221	0.32
 JIS symbol 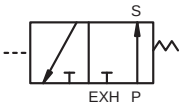				

Appearance	Part name	Model No.		Weight (kg)
	Plunger			
		ZCK-D	01	0.100
 ● ZCK-D01				
	Roller			
		ZCK-D	02	0.140
 ● ZCK-D02				
	Roller lever			
	Resin	ZCK-D	21	0.150
	Steel	ZCK-D	23	0.160
 ● ZCK-D21 D23				
	Wire			
		ZCK-D	06	0.100
 ● ZCK-D06				
	* Coil spring type			
		ZCK-D	08	0.035
 ● ZCK-D08				

How to order (single unit)

- ● Model No. of switch body only PXC-K[· · ·]
- ● Model No. of head only ZCK-D[· ·]
- ● Model No. of lever only ZCK-Y[· ·]

Rotary head lever actuator

Appearance	Part name	Model No.		Weight (kg)
	Rotary			
		ZCK-D	05	0.060



●ZCK-D05

Note: Three output methods can be used by changing the position of the inner cam. Refer to page 1668 for details.



Appearance	Part name	Model No.		Weight (kg)
	Roller lever			
	Resin roller	ZCK-Y	31	0.020
	Steel roller	ZCK-Y	33	0.030
	Bearing roller	ZCK-Y	34	0.030



● ZCK-Y31

Adjusting			
Resin roller	ZCK-Y	41	0.030



● ZCK-Y41

Rod lever			
Round rod	ZCK-Y	55	0.025
Square rod	ZCK-Y	54	0.025
Round rod (ø3 glass fiber)			
Square rod (□3 steel)			



● ZCK-Y55

Spring type			
	ZCK-Y	81	0.010



● ZCK-Y81

Spring rod			
	ZCK-Y	91	0.030



● ZCK-Y91

How to order (combination)

● Model No. of plunger and switch combination PXC-K [···] [··]

● Model No. of rotary and switch combination PXC-K [···] 05

● Model No. of lever/rotary and switch combination PXC-K [···] 05 [··]

(Example) Switch body, head, lever actuator combination, NC, rotary, and resin roller PXC-K211 05 31 = PXC-K2110531

*Made-to-order product.

Limit switch

Specification PXC-K $2^{1}_{2}1$

Appearance	Description	ZCK-D01	ZCK-D02	ZCK-D21 ZCK-D23	ZCK-D06 ZCK-D08
● ZCK-D01	Max. operating speed	0.5 m/S	0.5 m/S	1.5 m/S	1 m/S
	Operating distance: A *1	0.5 mm	0.5 mm	0.5 mm	-
	Max. distance: B	2.2 mm	2.2 mm	2.6 mm	-
	Return distance	0.2 mm	0.2 mm	0.2 mm	-
	A operating angle *1	-	-	-	35°
● ZCK-D02	Return angle	-	-		12°
	Min. operating force *1	16 N	20 N	15 N	-
	Min. operating torque *1	-	-	-	0.12 N.m

*1: Value at supply pressure of 0.6 MPa.





● ZCK-D06



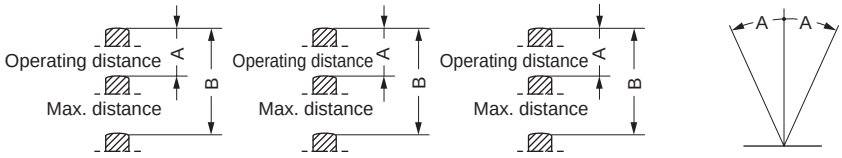

Rotary head ZCK-D05

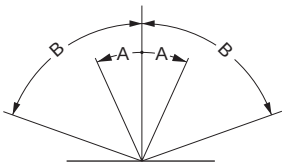

A operating angle *1	31°
B-Max. angle	80°
Return angle	3°
Min. operating torque *1	0.21 N.m

*1: Value at supply pressure of 0.6 MPa.

● Retrieving the output signal

Output signal retrieval is altered by changing the position of the internal cam as shown below.

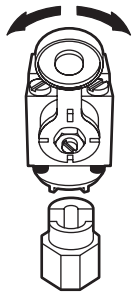

Output signal:➡ Left-right

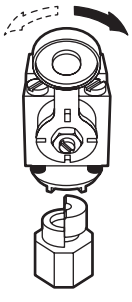

For right

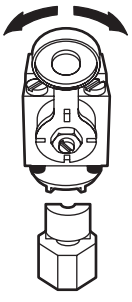

Left-right

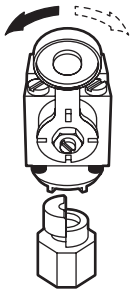

For left

Limit switch

Dimensions

● PXC-K21101,PXC-K22101

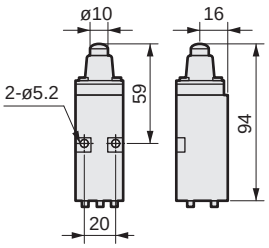

● PXC-K21102,PXC-K22102

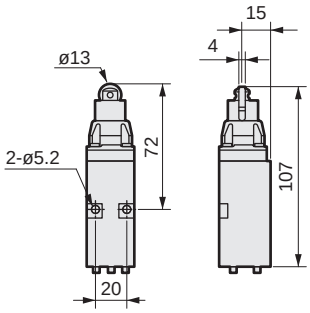

● PXC-K21121,PXC-K22121

K21123 K22123

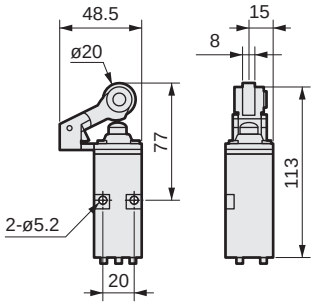

● PXC-K21106,PXC-K22106

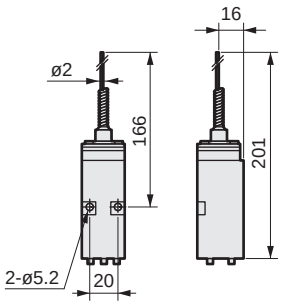

● PXC-K2110531,PXC-K2210531

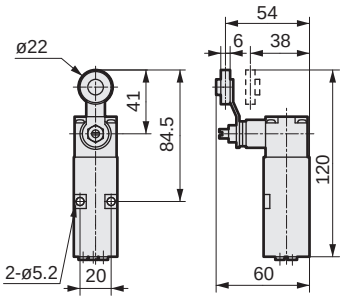

● PXC-K2110541,PXC-K2210541

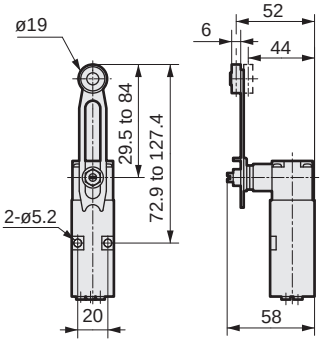

● PXC-K21108 ● PXC-K22108

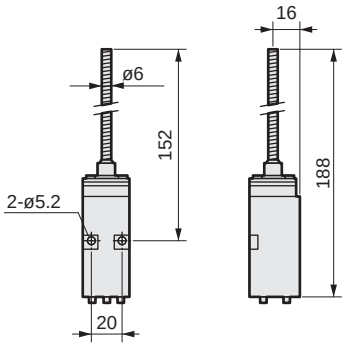

● ZCK-Y54,ZCK-Y55

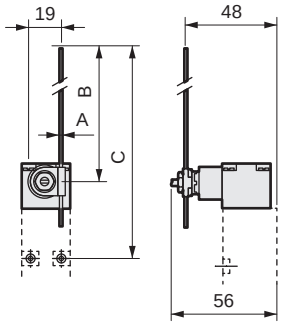

	ZCK-Y55	ZCK-Y54
A	ø3	□3
B	11 to 115	11 to 115
C	53 to 158	53 to 158

● ZCK-Y81

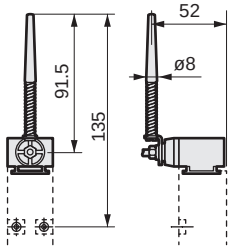

● ZCK-Y91

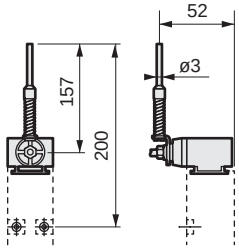

● PXC-K211,PXC-K221

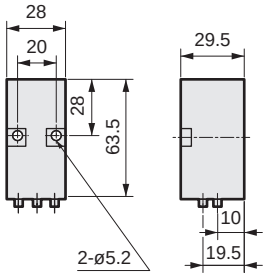

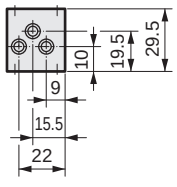

Accessory

Appearance



● PXC-X14

● Applications

Use for PLC, relay, integrated, and line type logical elements, and for terminal blocks.

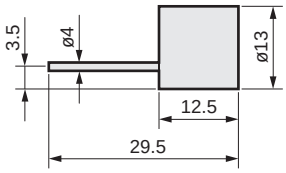

Silencer

Model No.	Weight (kg)
PXC-X14	0.040

MEMO

Gas generator

CONTENTS

	Page
Nitrogen gas extraction unit (NS)	1675
Inline oxygen monitor (PNA)	1699

Nitrogen gas extraction unit

■ **Gas generator**



CONTENTS

Product introduction	1676
Usage examples	1678
Series variation	1680
● System NSU	1682
● Unit NS	1688
⚠ Safety precautions	1694

Nitrogen gas can be extracted easily from compressed air.

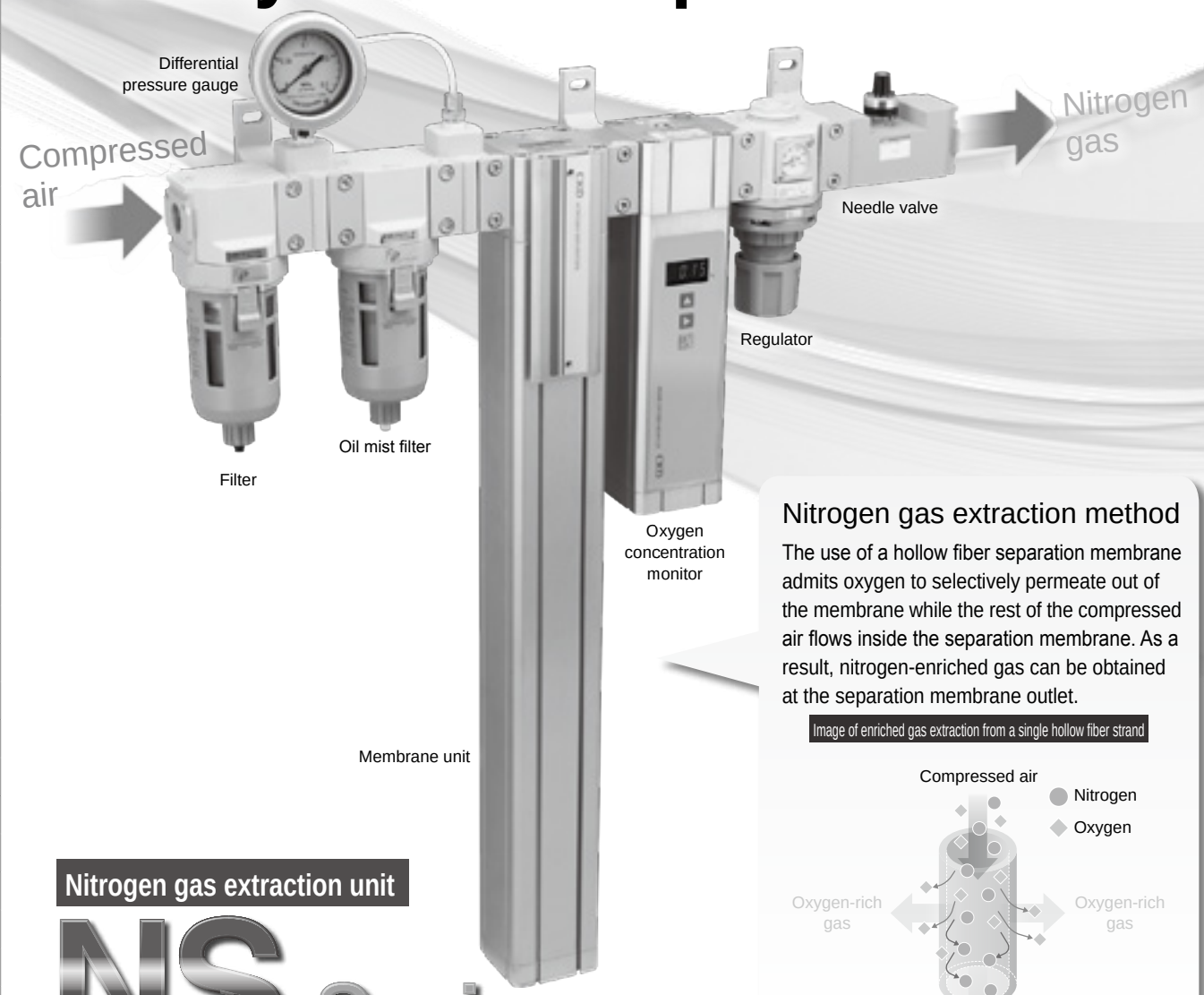

Nitrogen gas extraction method

The use of a hollow fiber separation membrane admits oxygen to selectively permeate out of the membrane while the rest of the compressed air flows inside the separation membrane. As a result, nitrogen-enriched gas can be obtained at the separation membrane outlet.

Image of enriched gas extraction from a single hollow fiber strand

Nitrogen gas extraction unit

NS Series

(Received the 2019 Good Design Award)

NS Series configuration

System	Unit	
	Single cylinder	Double acting
NSU	NS	



Install anywhere

Reduces processes, piping, and space

- Design and piping are done easily by providing system components.
- The ideal system can be selected according to the required flow rate.
- Long piping work dedicated for nitrogen is unnecessary since it can be installed near equipment.

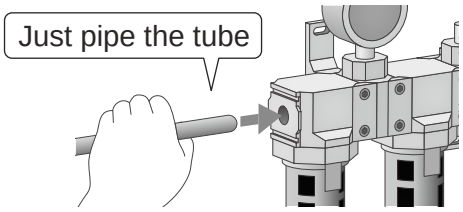

With NS Series

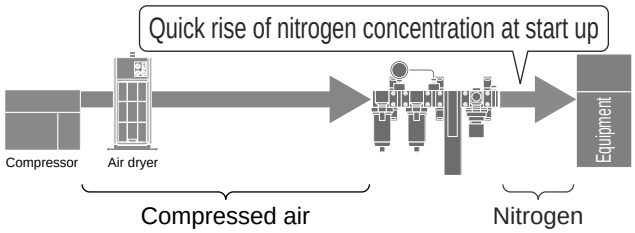

Conventional methods

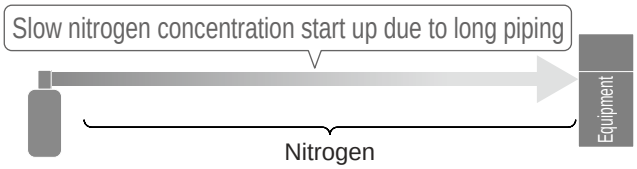

Power supply not required

- Usable even in explosion-proof atmospheres, different voltage areas, etc.
- No malfunctions due to electrical noise.
- Quiet, with no heat generation as there is no drive system.

*When selecting the oxygen concentration monitor (option), a power supply is required.

Low cost

Running cost reduction

- The only running costs are the electricity costs for the compressor.
- No continuous running costs such as cylinder refilling costs.

Nitrogen gas cylinder and gas unit price comparison

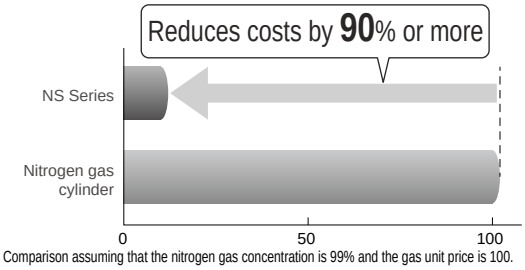

* Comparison assuming that the nitrogen gas concentration is 99% and the gas unit price is 100.

Expense reduction

- Troublesome cylinder management of remaining gases or replacement work is not required.

Easy maintenance

Sustainable reliability

- Since there are no movable parts, stable performance can be maintained.
- Parts replacement is possible without disassembling the piping.



Not subject to High Pressure Gas Safety Act

- There is no need for notification or assignment of qualified personnel.

Compatible with FP Series for secure food manufacturing processes

Safe and secure for food manufacturing processes.

NSF H1 grease for foodstuffs used

Material compatible with the Food Sanitation Act
Fluid passage section resin/rubber

FP Food Process

This logo represents CKD's stance to provide you with safe components for supporting your food manufacturing processes.

Usage examples

Packaging Gas-filled packaging

MAP (gas-filled) packaging essential for long-life food products.
Fills and replaces with nitrogen-enriched gas to prevent the oxidative degradation of food.

For image purposes.

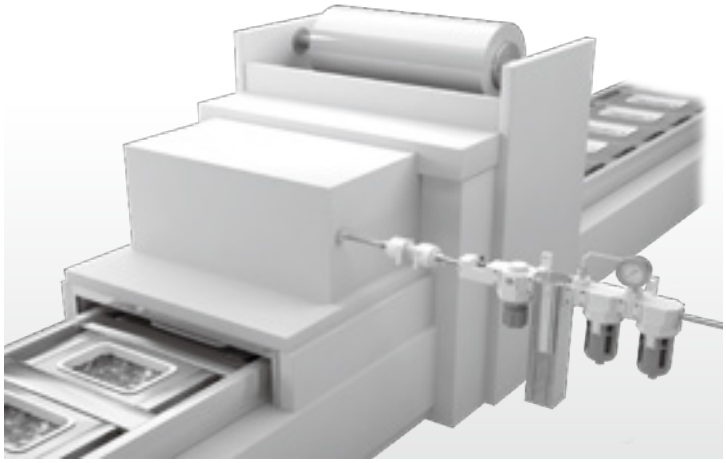

2-port solenoid valve for dry air



Bacteria removing filter



Compact flow rate sensor



Packaging Gas-filled packaging

For pillow packaging, the container is filled with nitrogen gas to prevent oxidative degradation, discoloration, or fading, to preserve fragrance, and also to prevent the package from losing its shape.

For image purposes.

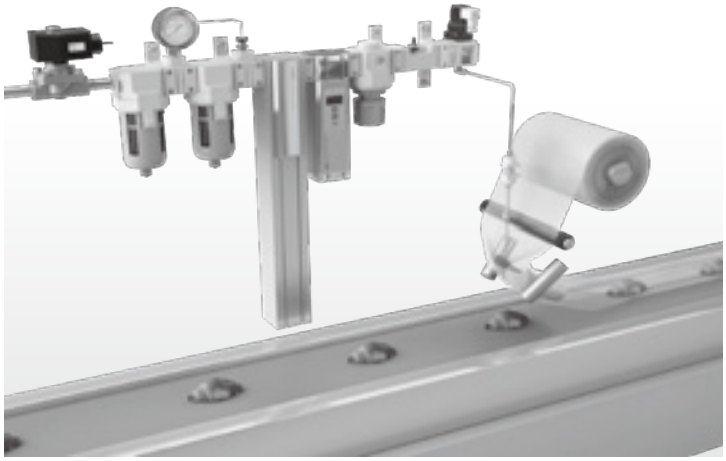

2-port solenoid valve for dry air



Bacteria removing filter



Air nozzle point type



Food/chemicals Remaining oxygen removal

Removes oxygen gas dissolved in liquid by injecting nitrogen gas into the liquid.

For image purposes.

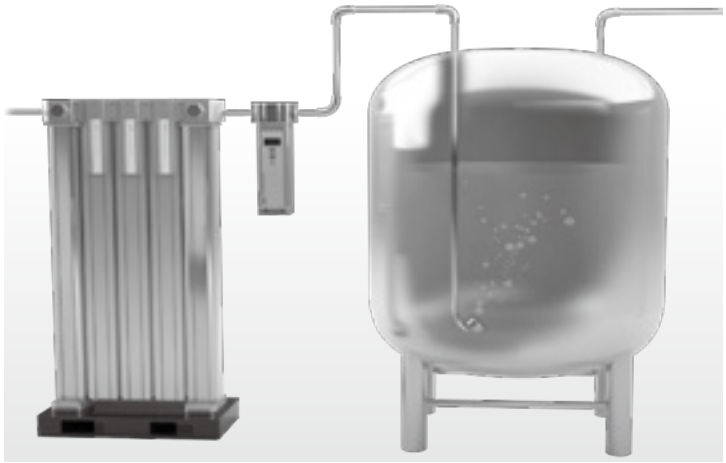

Oil-free main line filter



Compressed air flow rate sensor



2-port solenoid valve



Cultivation Low oxygen concentration management

Creates the low-oxygen environment preferred by cultivation samples by feeding nitrogen gas to the cultivation chamber.

For image purposes.

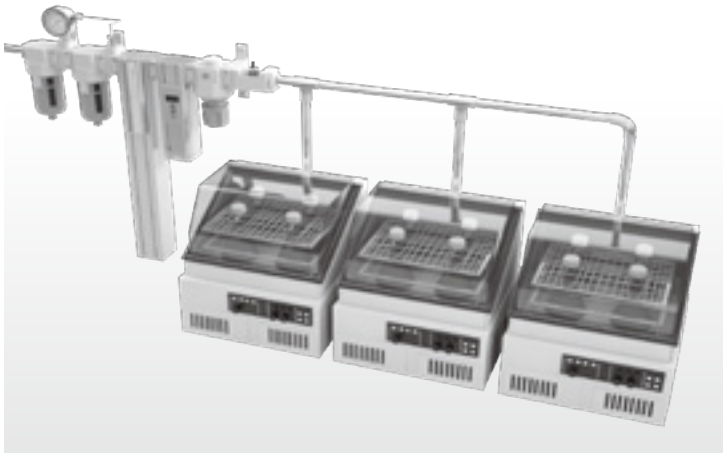

Compact flow rate sensor



2, 3-port solenoid valve



Anti-bacterial/bacteria-removing filter



Machining/assembling Explosion-proof atmospheres

Prevents explosive gas or corrosive gas from entering the container by filling it with nitrogen gas, purging air, and using positive internal pressure.

For image purposes.



Refrigeration air dryer



Main line filter



2-port solenoid valve



Base Improved solder wettability

Improves lead-free solder wettability by blocking oxygen with nitrogen gas and preventing oxidation on the tip or surface of the soldering iron.

For image purposes.

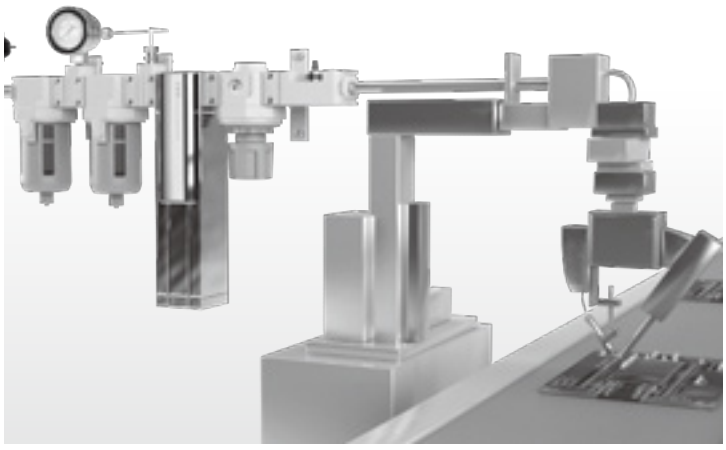

Drain separator



Cylinder valve



Flow rate sensor



System

Model No.	Appearance	Flow rate (L/min ANR) and nitrogen concentration (%)
NSU-3S		99.9 99.5 99 98 97 96 95
NSU-3L		99.9 99.5 99
NSU-4S		99.9 99.5
NSU-4L		99.9

Unit

Model No.	Appearance	Flow rate (L/min ANR) and nitrogen concentration (%)
NS-3S1		99.9 99.5 99 98 97 96 95
NS-3L1		99.9 99.5 99
NS-4S1		99.9 99.5
NS-4L1		99.9

Model No.	Quantity	Appearance	Flow rate (L/min ANR) and nitrogen concentration (%)
NS-4S2	2	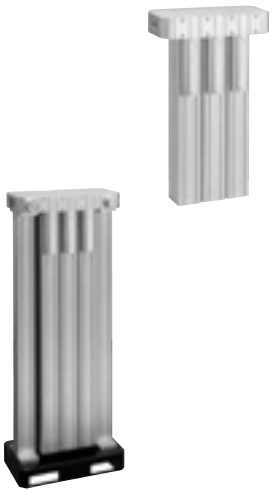	99.9 99.5 99 98 97 96 95
NS-4S3	3		99.9 99.5 99 98 97 96 95
NS-4L2	2		99.9 99.5 99 98 97
NS-4L3	3		99.9 99.5 99
NS-4S6	6		99.9 99.5 99 98
NS-4S8	8		99.9 99.5 99
NS-4SA	10		99.9 99.5
NS-4L6	6		99.9
NS-4L8	8		99.9

* The above shows the outlet nitrogen gas flow rate when the inlet air pressure is 0.7 MPa and the inlet air temperature is 25°C.

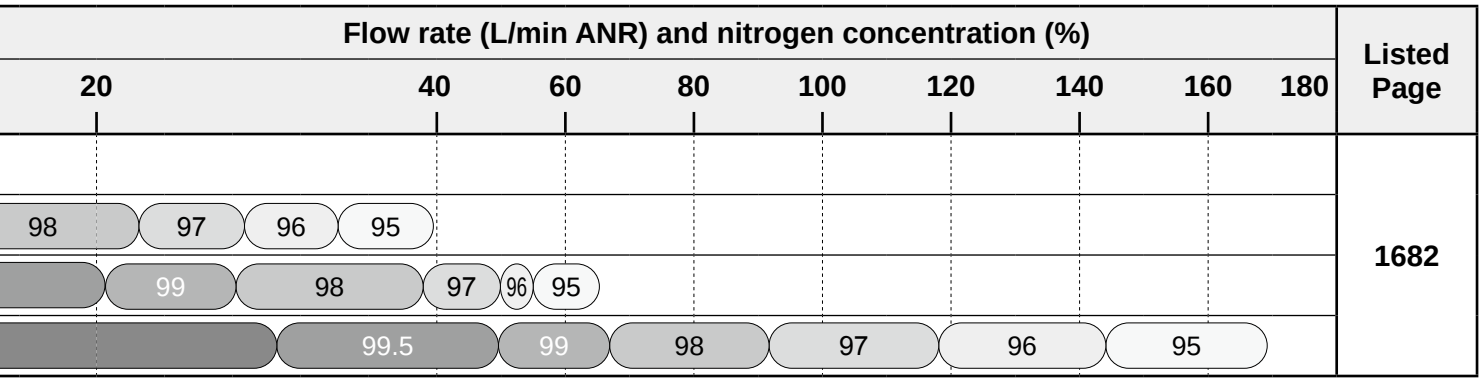

Listed Page: 1682

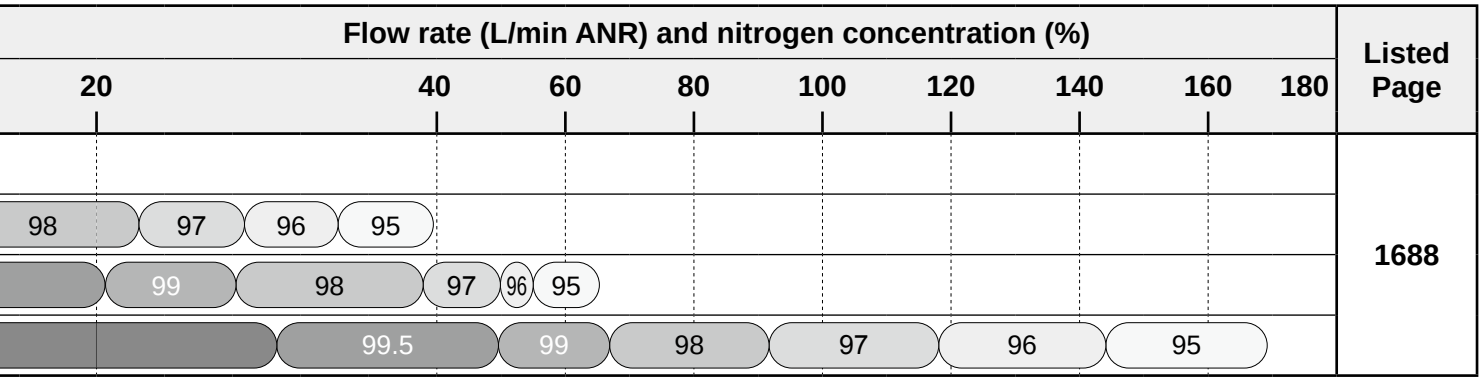

Listed Page: 1688

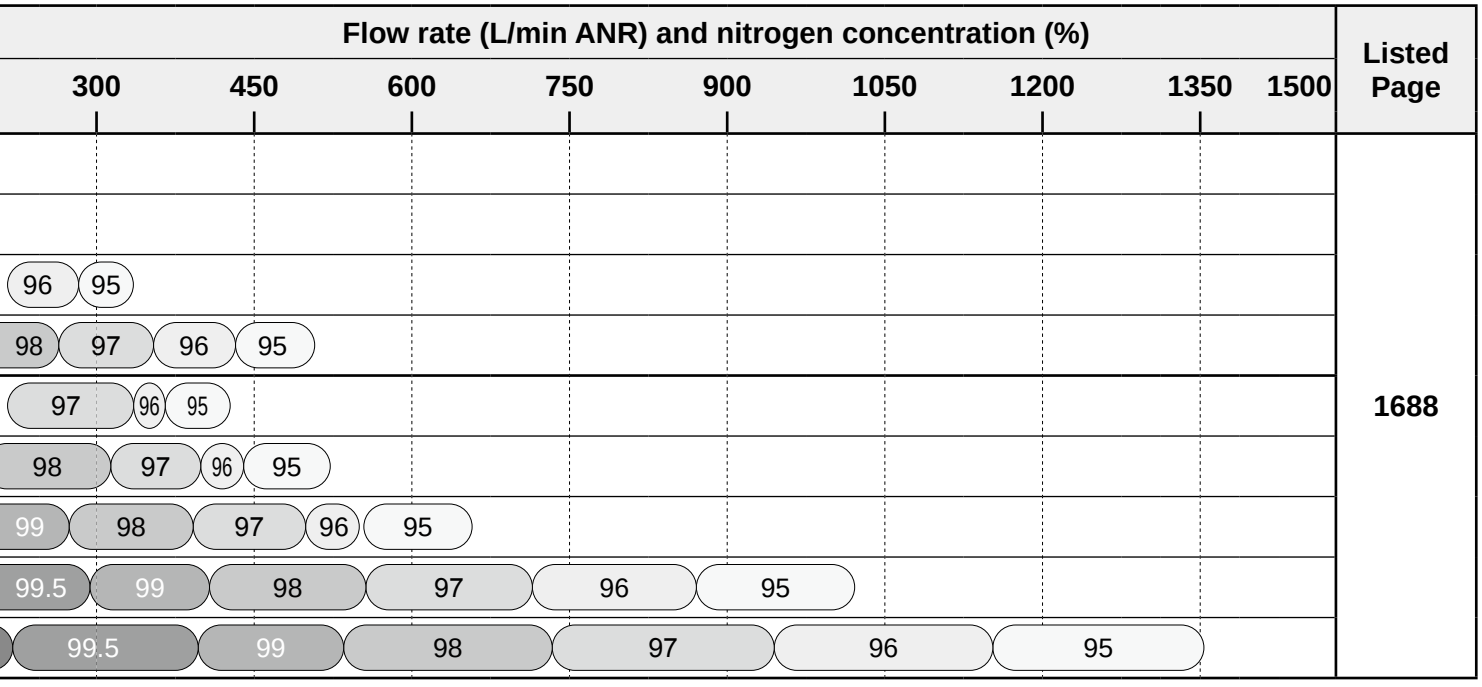

Listed Page: 1688

Supplement:
The indication of the nitrogen concentration of nitrogen gas obtained from the nitrogen gas purification unit accurately represents the total concentration of components other than oxygen (O2). In addition to nitrogen and oxygen, the raw air contains argon, carbon dioxide and water vapor. Therefore, the nitrogen gas product contains about 1% argon (which, like nitrogen, has difficulty permeating the membrane). The concentration of about 10 to 50 ppm of carbon dioxide, which permeates the membrane easily, decreases down to water vapor temperature −40°C at atmospheric dew point conversion.

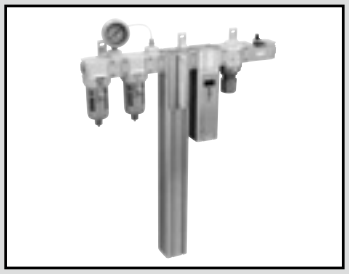

Nitrogen Gas Extraction Unit, system

NSU Series

Easily and stably supplying nitrogen gas.

- Nitrogen gas is obtained just by piping to a pneumatic source.
- All-in-one design with superior installation performance.

RoHS CAD

Specifications

1 MPa ≈ 145.0 psi, 1 MPa = 10 bar

Item				NSU-3S	NSU-3L	NSU-4S	NSU-4L
Range of working conditions	Working fluid			Compressed air			
	Inlet air pressure		MPa	0.4 (≈58 psi, 4 bar) to 1.0 (≈145 psi, 10 bar)			
	Proof pressure		MPa	1.5 (≈217 psi, 15 bar)			
	Inlet air temperature		°C	5 (41°F) to 50 (122°F)			
	Relative humidity of inlet air		RH	50%			
	Ambient temperature		°C	5 (41°F) to 50 (122°F)			
Rating	Inlet air pressure dew point		°C	10 (50°F)			
	Inlet air pressure		MPa	0.7 (≈101 psi, 7 bar)			
	Inlet air temperature		°C	25 (77°F)			
	Ambient temperature		°C	25 (77°F)			
Rated flow	Outlet gas flow rate ℓ/min (ANR)	Nitrogen concentration (% or above)	99.9	1.9	5.6	11.0	30.6
			99	5.0	15.5	28.2	66.9
			97	8.9	28.7	49.9	118.1
			95	14.0	39.8	65.3	169.2
	Inlet air flow rate ℓ/min (ANR)		99.9	21.2	62.3	122.3	340.0
			99	20.9	64.6	117.5	278.8
			97	24.1	77.6	134.9	319.2
			95	31.2	88.5	145.2	376.0
Air filter		Filtration	μm	5			
Oil mist filter		Oil removal	mg/m^3	0.01 or less (0.1 or less after oil saturation) * The measured value when primary oil concentration is 30 mg/m^3 at 21°C (69°F).			
Regulator		Set pressure range	MPa	0.05 (≈8 psi, 1 bar) to 0.85 (≈123 psi, 8 bar)			
Oxygen concentration monitor				Refer to page 1702 for specifications.			
Needle valve		Flow characteristics		Refer to the graph below.			
Standard accessories				Pressure gauge/differential pressure gauge/bracket			

*Refer to the outlet nitrogen gas flow rate and needle valve flow characteristics (see below) to check if the conditions are within the working range. Contact CKD when working outside the specified range.

Needle valve flow characteristics

*The flow rate characteristics graph indicates reference values and not guaranteed values.

● NS-QDVL-020

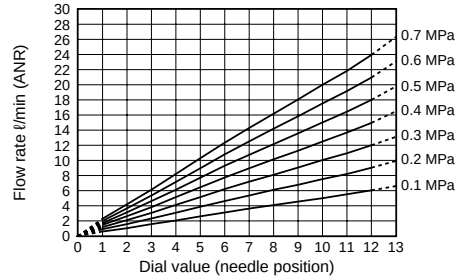

● NS-QDVL-080

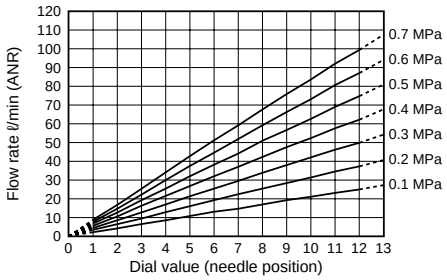

● NS-QDVL-160

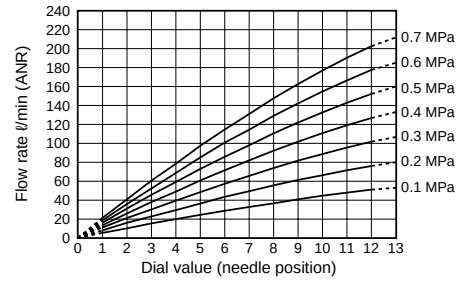

● NS-QDVL-240

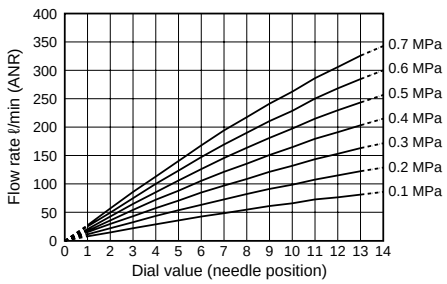

● NS-QDVL-400

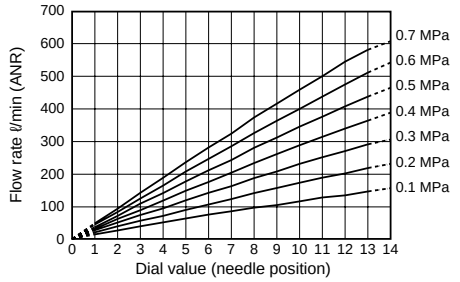

Selection guide

The temperature and inlet air pressure affect the outlet nitrogen gas flow and should be corrected if they differ from the ratings in the specification section.

STEP 1 Confirm the working conditions
Outlet nitrogen gas flow rate [L/min (ANR)]
Outlet nitrogen gas pressure [MPa]
Inlet air pressure [MPa]
Inlet air temperature [°C]

STEP 2 Confirm the compensation coefficient of outlet nitrogen gas flow rate affected by inlet air temperature.

(1) Temperature - Gas flow rate compensation coefficient

Temperature (°C)	Outlet nitrogen gas concentration			
	99.9%	99%	97%	95%
5	0.64	0.79	0.79	0.75
10	0.73	0.84	0.84	0.81
25	1	1	1	1
40	0.95	1.08	1.06	1.11
50	0.9	1.09	1.11	1.15

STEP 3 Confirm the compensation coefficient of outlet nitrogen gas flow rate affected by inlet air pressure.

(2) Pressure - Gas flow rate compensation coefficient

Pressure (MPa)						
0.4	0.5	0.6	0.7	0.8	0.9	1.0
0.4	0.65	0.75	1	1.07	1.2	1.3

STEP 4 Find the appropriate body size and membrane unit size based on the rated outlet nitrogen gas flow rate of each model.
Rated outlet nitrogen gas flow rate x (1) temperature gas flow rate correction coefficient x (2) pressure gas flow rate correction coefficient = corrected refined nitrogen gas flow rate
Select the body size and membrane unit size with sufficient refined nitrogen gas flow rate after correction with the above formula.

STEP 5 From the outlet nitrogen gas flow rate, select the required needle and model
Based on the outlet nitrogen gas flow rate and the outlet nitrogen gas pressure confirmed in STEP 1, select the needle from the needle flow rate characteristics (P4)

STEP 6 Select the model from STEP 4 and STEP 5.

STEP 7 Confirm the compensation coefficient for inlet air flow rate affected by inlet air temperature.

(3) Temperature - Air flow rate compensation coefficient

Temperature (°C)	Outlet nitrogen gas concentration			
	99.9%	99%	97%	95%
5	0.73	0.68	0.75	0.69
10	0.8	0.76	0.81	0.77
25	1	1	1	1
40	1.32	1.25	1.17	1.2
50	2.05	1.38	1.31	1.31

STEP 8 Confirm the compensation coefficient for inlet air flow rate affected by inlet air pressure.

(4) Pressure - Air flow rate compensation coefficient

Pressure (MPa)						
0.4	0.5	0.6	0.7	0.8	0.9	1.0
0.61	0.79	0.91	1	1.07	1.2	1.3

STEP 9 Determine the inlet air flow rate from the rated outlet nitrogen gas flow rate of each model.
Inlet air flow rate of the model selected in STEP 5 x (3) temperature air flow rate correction coefficient x (4) pressure air flow rate correction coefficient = corrected inlet air flow rate
Based on the inlet air flow rate corrected as above, confirm whether the compressor capacity is sufficient.

Example of calculation

Conditions	Working conditions	Selecting conditions	Compensation coefficient for outlet nitrogen gas flow rate	Compensation coefficient for inlet air flow rate
Outlet nitrogen flow rate	50 [L/min (ANR)]	50 [L/min (ANR)]	-	-
Outlet nitrogen concentration	99 [%]	99 [%]	-	-
Outlet nitrogen pressure	0.2 [MPa]	0.2 [MPa]	-	-
Inlet air temperature	35 [°C]	40 [°C]	(1) 1.08	(3) 1.25
Inlet air pressure	0.6 to 0.7 [MPa]	0.6 [MPa]	(2) 0.75	(4) 0.91

Calculate the following and select according to the above conditions.
From the formula 50 (outlet nitrogen gas flow rate) ÷ 1.08 ÷ 0.75 = 61.7 [ℓ/min (ANR)], the specification field shows that NSU-4L has sufficient flow rate and is the proper size.
For needle size, select NS-QDVL-160 at 0.2 [MPa], which can be adjusted at 50 [L/min (ANR)].
This enables the selection of "NSU-4LC10AAK-N".
In this case, the inlet air flow rate is 278.8 x 1.25 x 0.91 = 317.1 ℓ/min (ANR).

How to order

NSU - 3 S A 10A NN - N - FP1

- Ⓐ Body size
- Ⓑ Membrane unit size
- Ⓒ Needle valve
- Ⓓ Port size
- Ⓔ Oxygen concentration monitor
- Ⓕ Option
- Ⓖ Series

Code	Description
Ⓐ Body size	
3	Body width 63
4	Body width 79
Ⓑ Membrane unit size	
S	Short
L	Long
Ⓒ Needle valve	*1
A	Max. flow rate 20 L/min
B	Max. flow rate 80 L/min
C	Max. flow rate 160 L/min
D	Max. flow rate 240 L/min
E	Max. flow rate 400 L/min
Ⓓ Port size	
10A	Rc3/8
10B	G3/8 *2
10C	NPT3/8 *3
Ⓔ Oxygen concentration monitor	
NN	None
AK	With oxygen monitor
AM	With oxygen monitor, traceability cert. + series variation diagram, company cert.
Ⓕ Option	
N	No option
X	Reverse flow
E	With exhaust port *5
H	Reverse flow + exhaust port
Ⓖ Series	
Blank	Standard
FP1	Series for food processing

* Contact CKD for other combinations.

⚠ Precautions for model No. selection

*1: Ⓒ Refer to the table below for needle valve combinations.

	Needle valve size NS-QDVL-***				
	20	80	160	240	400
NSU-3S	A	B			
NSU-3L	A	B	C		
NSU-4S	A	B	C	D	
NSU-4L	A	B	C	D	E

*2: When selecting G3/8, the regulator pressure gauge units will be shown as bar.
*3: When selecting NPT3/8, the regulator pressure gauge units will be shown as psi.
*4: Viewed from the front, standard products have an air inlet on the left port and a nitrogen gas outlet on the right port.
*5: Exhaust (oxygen-rich gas) from standard products is released into the atmosphere. For "E", piping connection for exhaust (oxygen-rich gas) is possible. Size of exhaust port is Rc1/2.

* The above oxygen concentration monitor does not include the connector cable.
Order the following connector cable discrete model No.

Connector cable discrete model No.

● DC cable

PNA - 1D

Cable length	
1D	1000 mm
3D	3000 mm
5D	5000 mm

● AC adapter single unit

PNA-A

● AC adapter + conversion plug set

PNA-AG

Refer to page 1703 for the dimensions.

Components

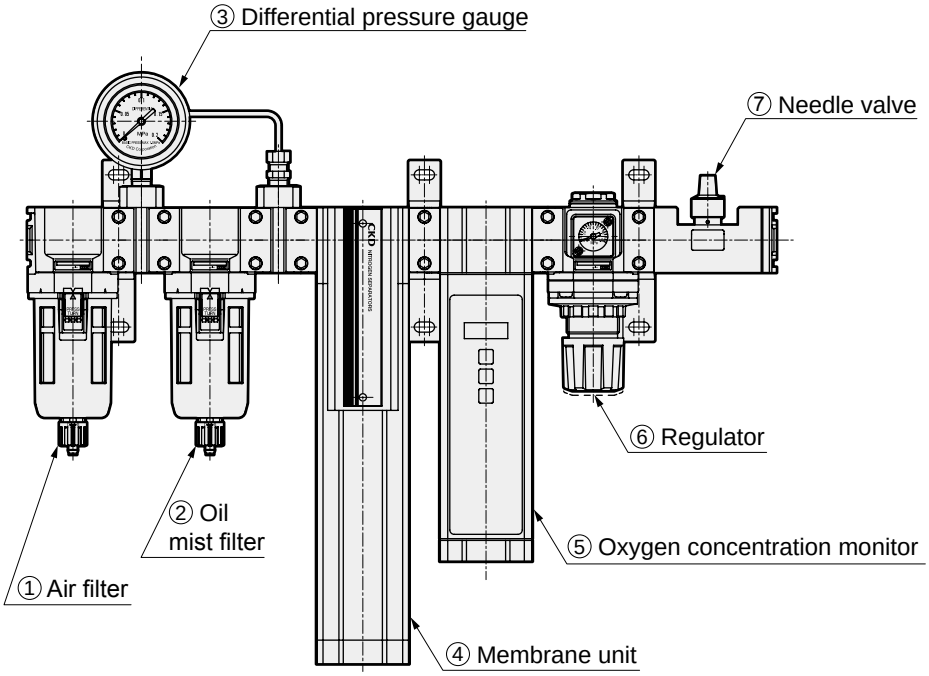

■ Standard (with port size Rc3/8)

Unit model No.	NSU-3S□	NSU-3L□	NSU-4S□	NSU-4L□
(1) Air filter	F3000-10-W-F		F4000-10-W-F	
(2) Oil mist filter	M3000-10-W-F1		M4000-10-W-F1	
(3) Differential pressure gauge	GA400-8-P02			
(4) Membrane unit	NS-3S110A-□	NS-3L110A-□	NS-4S110A-□	NS-4L110A-□
(5) Oxygen concentration monitor	PNA-10A-□-FP2			
(6) Regulator	NS-QR3-FP1		NS-QR4-FP1	
(7) Needle valve	NS-QDVL-020 NS-QDVL-080	NS-QDVL-020 NS-QDVL-080 NS-QDVL-160	NS-QDVL-020 NS-QDVL-080 NS-QDVL-160 NS-QDVL-240	NS-QDVL-020 NS-QDVL-080 NS-QDVL-160 NS-QDVL-240 NS-QDVL-400

■ FP1 (with port size Rc3/8)

Unit model No.	NSU-3S□-FP1	NSU-3L□-FP1	NSU-4S□-FP1	NSU-4L□-FP1
(1) Air filter	F3000-10-W-F-FP1		F4000-10-W-F-FP1	
(2) Oil mist filter	M3000-10-W-F1-FP1		M4000-10-W-F1-FP1	
(3) Differential pressure gauge	GA400-8-P02			
(4) Membrane unit	NS-3S110A-□-FP2	NS-3L110A-□-FP2	NS-4S110A-□-FP2	NS-4L110A-□-FP2
(5) Oxygen concentration monitor	PNA-10A-□-FP2			
(6) Regulator	NS-QR3-FP1		NS-QR4-FP1	
(7) Needle valve	NS-QDVL-020 NS-QDVL-080	NS-QDVL-020 NS-QDVL-080 NS-QDVL-160	NS-QDVL-020 NS-QDVL-080 NS-QDVL-160 NS-QDVL-240	NS-QDVL-020 NS-QDVL-080 NS-QDVL-160 NS-QDVL-240 NS-QDVL-400

*Contact CKD regarding port size G3/8 and NPT3/8.

Dimensions

● Without oxygen concentration monitor

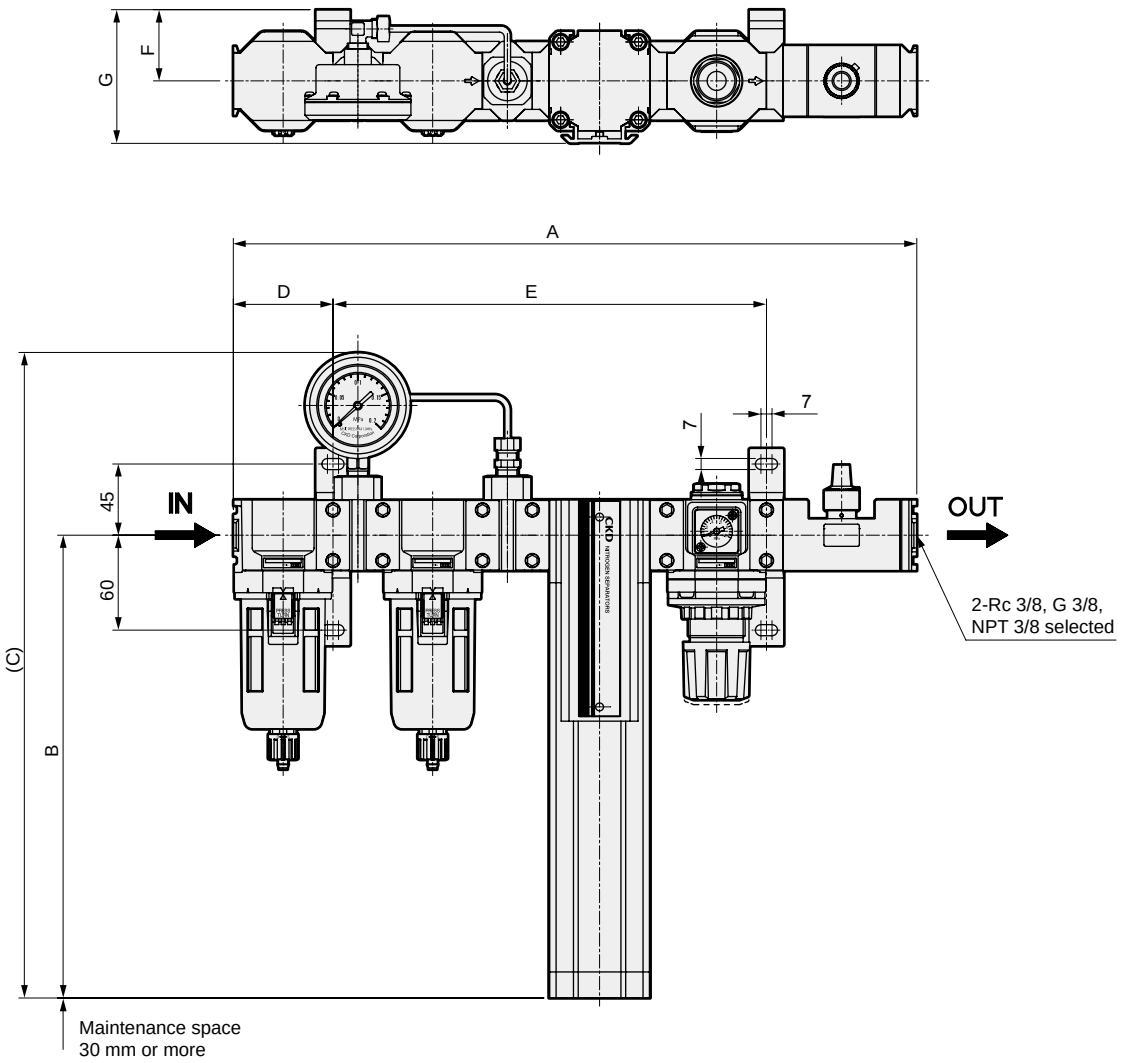

Model No.	A	B	C	D	E	F	G	Weight (kg)
NSU-3S*10*NN	432	293	408	63	274	45	85	4.0
NSU-3L*10*NN	432	543	658	63	274	45	85	4.9
NSU-4S*10*NN	498	543	658	80	323	55	106	6.9
NSU-4L*10*NN	498	1043	1158	80	323	55	106	9.7

Dimensions

● With oxygen concentration monitor

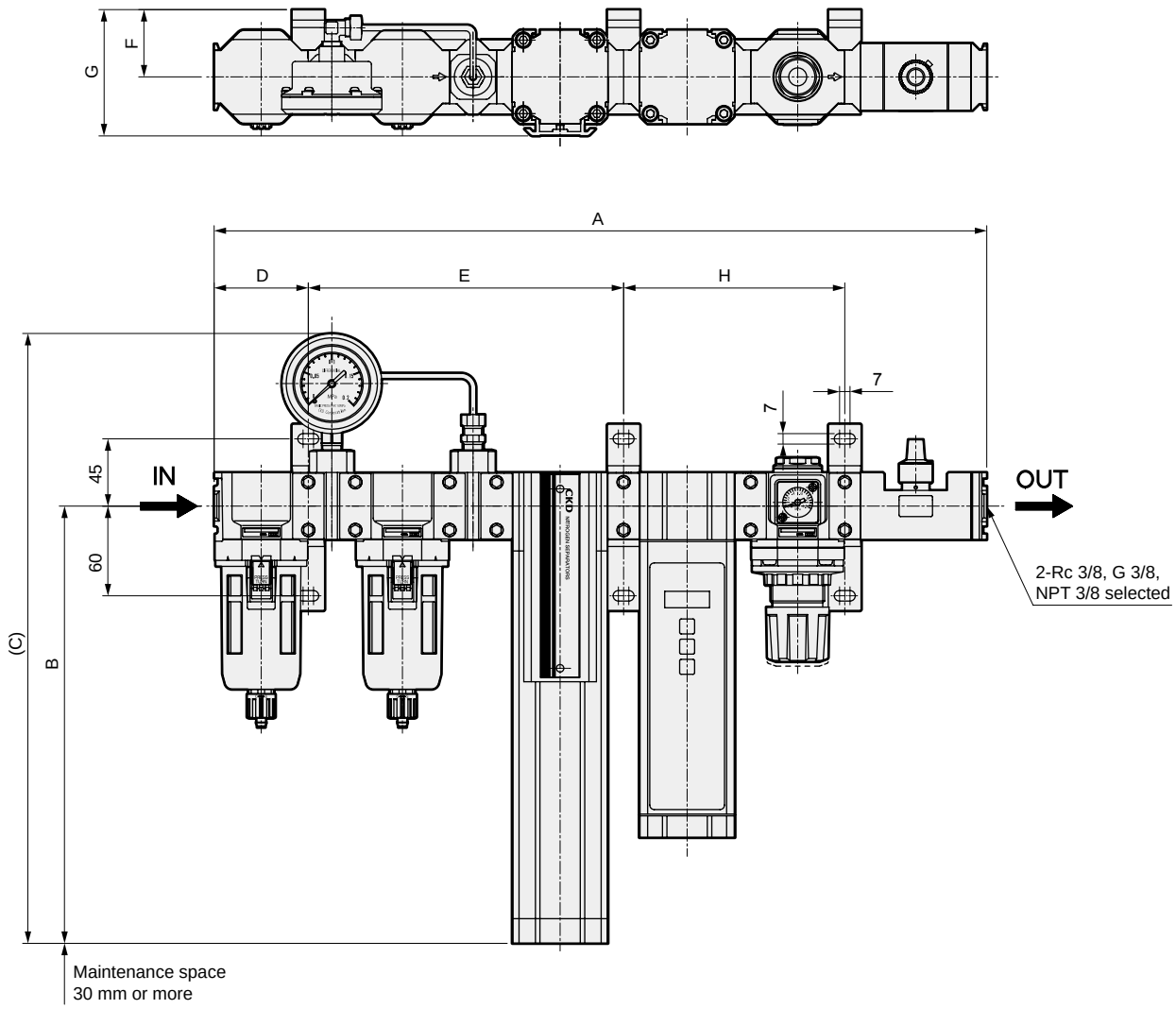

Model No.	A	B	C	D	E	F	G	H	Weight (kg)
NSU-3S*10**	517	293	408	63	211	45	85	148	5.6
NSU-3L*10**	517	543	658	63	211	45	85	148	6.5
NSU-4S*10**	583	543	658	80	243	55	106	165	8.5
NSU-4L*10**	583	1043	1158	80	243	55	106	165	11.3

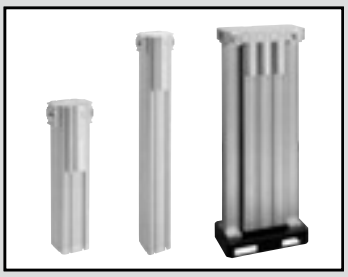

Material compatible with the Food Sanitation Act

Nitrogen gas extraction unit

NS Series

Modular design for easy system expansion with peripheral components

■ Nitrogen gas is obtained just by supplying compressed air.

RoHS CAD

Specifications

■ Single cylinder

1 MPa ≈ 145.0 psi, 1 MPa = 10 bar

Item				NS-3S1	NS-3L1	NS-4S1	NS-4L1
Range of working conditions	Working fluid			Compressed air			
	Inlet air pressure	MPa		0.4 (≈58 psi, 4 bar) to 1.0 (≈145 psi, 10 bar)			
	Proof pressure	MPa		1.5 (≈217 psi, 15 bar)			
	Inlet air temperature	°C		5 (41°F) to 50 (122°F)			
	Relative humidity of inlet air	RH		50% or less			
	Ambient temperature	°C		5 (41°F) to 50 (122°F)			
Rating	Inlet air purity class			1:6:1 (JIS B 8392-1:2012)			
	Inlet air pressure	MPa		0.7 (≈101 psi, 7 bar)			
	Inlet air temperature	°C		25 (77°F)			
	Ambient temperature	°C		25 (77°F)			
Rated flow rate	Outlet gas flow rate ℓ/min (ANR)	Nitrogen concentration (% or above)	99.9	1.9	5.6	11.0	30.6
			99	5.0	15.5	28.2	66.9
			97	8.9	28.7	49.9	118.1
			95	14.0	39.8	65.3	169.2
	Inlet air flow rate ℓ/min (ANR)		99.9	21.2	62.3	122.3	340.0
			99	20.9	64.6	117.5	278.8
			97	24.1	77.6	134.9	319.2
			95	31.2	88.5	145.2	376.0

■ Double cylinder

Item				NS-4S2	NS-4S3	NS-4L2	NS-4L3	NS-4S6	NS-4S8	NS-4SA	NS-4L6	NS-4L8
Range of working conditions	Working fluid			Compressed air								
	Inlet air pressure	MPa		0.4 (≈58 psi, 4 bar) to 1.0 (≈145 psi, 10 bar)								
	Proof pressure	MPa		1.5 (≈217 psi, 15 bar)								
	Inlet air temperature	°C		5 (41°F) to 50 (122°F)								
	Relative humidity of inlet air	RH		50% or less								
	Ambient temperature	°C		5 (41°F) to 50 (122°F)								
Rating	Inlet air purity class			1:6:1 (JIS B 8392-1:2012)								
	Inlet air pressure	MPa		0.7 (≈101 psi, 7 bar)								
	Inlet air temperature	°C		25 (77°F)								
	Ambient temperature	°C		25 (77°F)								
Rated flow	Outlet nitrogen flow rate ℓ/min (ANR)	Nitrogen concentration (% or above)	99.9	22.0	33.0	61.2	91.8	66.0	88.0	110.0	183.6	244.8
			99	56.4	84.6	133.8	200.7	169.2	225.6	282.0	401.4	535.2
			97	99.8	149.7	236.2	354.3	299.4	399.2	499.0	708.6	944.8
			95	130.6	195.9	338.4	507.6	391.8	522.4	653.0	1015.2	1353.6
	Inlet air flow rate ℓ/min (ANR)		99.9	244.6	366.9	680.0	1020.0	733.8	978.4	1223.0	2040.0	2720.0
			99	235.0	352.5	557.6	836.4	705.0	940.0	1175.0	1672.8	2230.4
			97	269.8	404.7	638.4	957.6	809.4	1079.2	1349.0	1915.2	2553.6
			95	290.4	435.6	752.0	1128.0	871.2	1161.6	1452.0	2256.0	3008.0

Note: The product will be floor-mounted for 6 units or more.

Selection guide

The temperature and inlet air pressure affect the outlet nitrogen gas flow and should be corrected if they differ from the ratings in the specification section.

STEP 1 Confirm the working conditions and specification rates.
Working conditions: Inlet air pressure, inlet air temperature, required nitrogen gas flow rate

STEP 2 Confirm the compensation coefficient of outlet nitrogen gas flow rate affected by inlet air temperature.

(1) Temperature - Gas flow rate compensation coefficient

Temperature (°C)	Outlet nitrogen gas concentration			
	99.9%	99%	97%	95%
5	0.64	0.79	0.79	0.75
10	0.73	0.84	0.84	0.81
25	1	1	1	1
40	0.95	1.08	1.06	1.11
50	0.9	1.09	1.11	1.15

STEP 3 Confirm the compensation coefficient of outlet nitrogen gas flow rate affected by inlet air pressure.

(2) Pressure - Gas flow rate compensation coefficient

Pressure (MPa)						
0.4	0.5	0.6	0.7	0.8	0.9	1.0
0.4	0.65	0.75	1	1.07	1.2	1.3

STEP 4 Determine the appropriate model from the rated outlet nitrogen gas flow rate of each model.
Rated outlet nitrogen gas flow rate x (1) temperature gas flow rate correction coefficient x (2) pressure gas flow rate correction coefficient = corrected outlet nitrogen gas flow rate
Select one with sufficient outlet nitrogen gas flow rate after correction with the above formula.

STEP 5 Confirm the compensation coefficient of inlet air flow rate affected by inlet air temperature.

(3) Temperature - Air flow rate compensation coefficient

Temperature (°C)	Outlet nitrogen gas concentration			
	99.9%	99%	97%	95%
5	0.73	0.68	0.75	0.69
10	0.8	0.76	0.81	0.77
25	1	1	1	1
40	1.32	1.25	1.17	1.2
50	2.05	1.38	1.31	1.31

STEP 6 Confirm the compensation coefficient of inlet air flow rate affected by inlet air pressure.

(4) Pressure - Air flow rate compensation coefficient

Pressure (MPa)						
0.4	0.5	0.6	0.7	0.8	0.9	1.0
0.61	0.79	0.91	1	1.07	1.2	1.3

STEP 7 Determine the inlet air flow rate from the rated outlet nitrogen gas flow rate of each model.
Inlet air flow rate of the model selected in STEP 4 x (3) temperature air flow rate correction coefficient x (4) pressure air flow rate correction coefficient = corrected inlet air flow rate ℓ/min (ANR)
Based on the inlet air flow rate corrected as above, confirm whether the compressor capacity is sufficient.

Example of calculation

Conditions	Working conditions	Selecting conditions	Compensation coefficient for outlet nitrogen gas flow rate	Compensation coefficient for inlet air flow rate
Inlet air temperature	35 to 39°C	40°C	(1) 1.08	(3) 1.25
Inlet air pressure	0.5 to 0.55 MPa	0.5 MPa	(2) 0.65	(4) 0.79

Substitute the above conditions into the equation above to obtain the outlet nitrogen gas flow rate when using NS-4L1 at a nitrogen concentration of 99%.
It will be: 66.9 (rated outlet nitrogen gas flow rate) x 1.08 x 0.65 = 46.9 ℓ/min (ANR).
If the required nitrogen gas flow rate is less than or equal to this value, select that model.
In this case, the inlet air flow rate is 278.8 x 1.25 x 0.79 = 275.3 ℓ/min (ANR).

How to order

NS - 3 S 1 10A - B - FP2

Model No. Ⓐ Body size Ⓑ Membrane unit size Ⓒ Quantity Ⓓ Port size Ⓔ Option Ⓕ Series

Code	Description
Ⓐ Body size	
3	Body width 63
4	Body width 79
Ⓑ Membrane unit size	
S	Short
L	Long
Ⓒ Quantity	***1**
1	1 pc.
2	2 pcs. (Select from models NS-4S and 4L.)
3	3 pcs. (Select from models NS-4S and 4L.)
6	6 pcs. (Select from models NS-4S and 4L.)
8	8 pcs. (Select from models NS-4S and 4L.)
A	10 pcs. (Selectable model is NS-4S.)
Ⓓ Port size	
10A	Rc 3/8 (NS-3S1,3L1,4S1,4L1)
10B	G 3/8 (NS-3S1,3L1,4S1,4L1)
10C	NPT 3/8 (NS-3S1,3L1,4S1,4L1)
20A	Rc 3/4 (NS-4S2,4S3,4L2,4L3)
20B	G 3/4 (NS-4S2,4S3,4L2,4L3)
20C	NPT 3/4 (NS-4S2,4S3,4L2,4L3)
25A	Rc 1 (NS-4S6,4S8,4SA,4L6,4L8)
25B	G 1 (NS-4S6,4S8,4SA,4L6,4L8)
25C	NPT 1 (NS-4S6,4S8,4SA,4L6,4L8)
Ⓔ Option	***2**
N	No option
B	Bracket
C	Bracket + reverse flow
D	Bracket + exhaust port
F	Bracket + reverse flow + exhaust port
X	Reverse flow
E	With exhaust port
H	Reverse flow + exhaust port
Ⓕ Series	
Blank	Standard
FP2	Series for food processing

⚠ Precautions for model No. selection

*1: The product will be floor-mounted without bracket for 6 units or more.
*2: Viewed from the front, a standard product has an air inlet on the left port, while an air outlet on the right port. For "X", an air inlet is provided on the right port, with an air outlet provided on the left port.
*3: Exhaust air (oxygen-enriched gas) from standard products is released into the atmosphere. For "E", piping connection for exhaust (oxygen-rich gas) is possible. Size of exhaust port is Rc1/2.

Dimensions

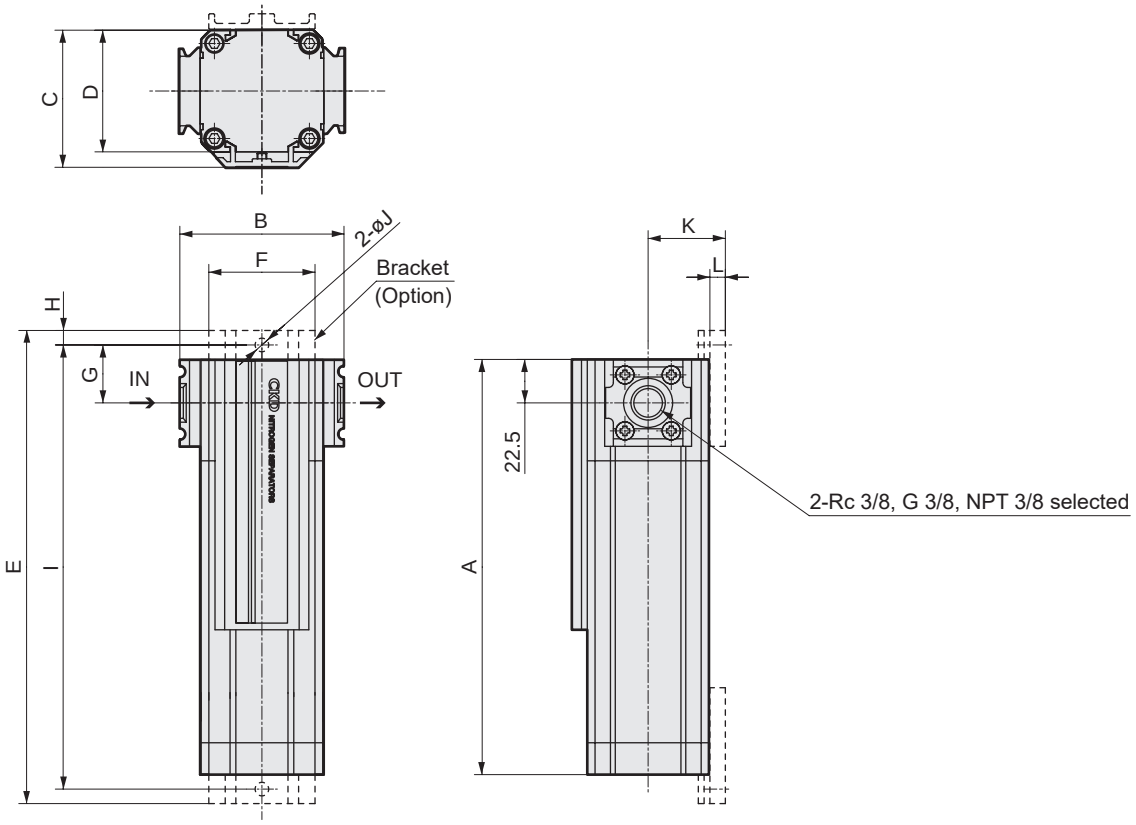

Model No.	A	B	C	D	Weight (kg)	Bracket relational dimensions							
						E	F	G	H	I	J	K	L
NS-3S1	315	85	71	63	1.8	345	55	30	7.5	330	7	40	8
NS-3L1	565	85	71	63	2.7	595	55	30	7.5	580	7	40	8
NS-4S1	565	100	90	79	4.0	605	70	32.5	10	585	9	50	10
NS-4L1	1065	100	90	79	6.8	1105	70	32.5	10	1085	9	50	10

Dimensions

● Qty.: 2 or 3 units

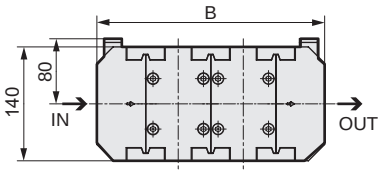

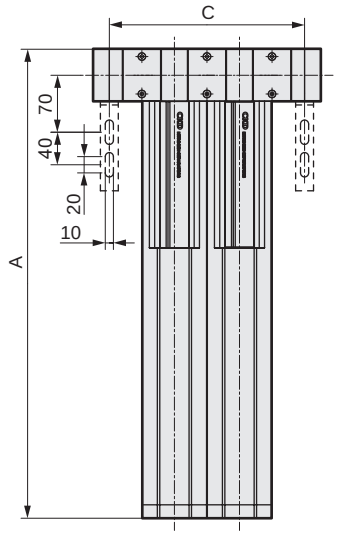

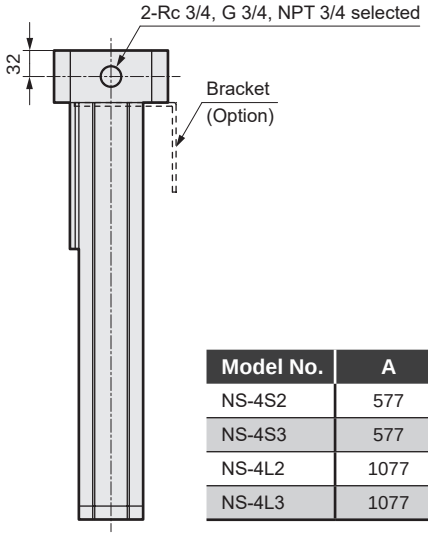

Model No.	A	B	C	Weight (kg)
NS-4S2	577	280	240	12
NS-4S3	577	360	320	17
NS-4L2	1077	280	240	18
NS-4L3	1077	360	320	25

● Qty.: 6, 8 or 10 units

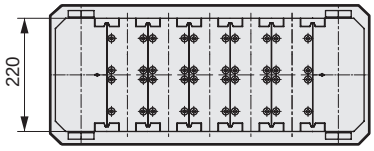

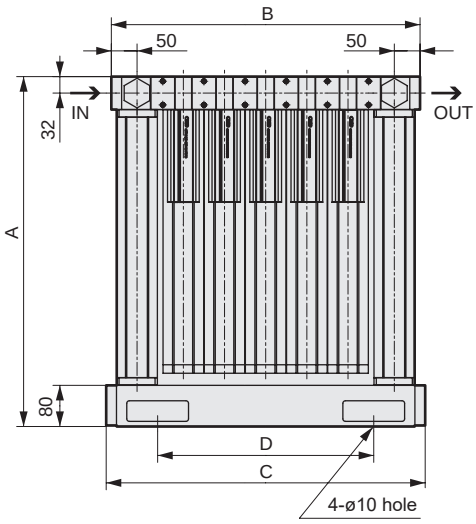

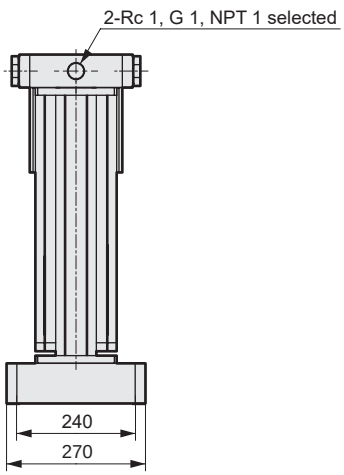

Model No.	A	B	C	D	Weight (kg)
NS-4S6	680	440	460	260	41
NS-4S8	680	520	540	340	50
NS-4SA	680	600	620	420	59
NS-4L6	1180	440	460	260	63
NS-4L8	1180	520	540	340	78

MEMO

Pneumatic components (nitrogen gas extraction unit)

Safety Precautions

Be sure to read this section before use.
For general precautions for pneumatic components, refer to Intro Page 63.
Although the above general catalog states that products are not applicable for equipment or applications with direct contact with beverages/foodstuffs, the FP2 Series products can be used in such applications as long as they are within the range of the product specifications.

Product-specific cautions: Nitrogen Gas Extraction Unit NS, NSU, PNA Series

Design/selection

⚠CAUTION

■Working environment
- Avoid installing this product where it will be subject to direct sunlight or rain.
- As the bowl material is polycarbonate, avoid use with the following chemicals or in an atmosphere containing these chemicals. [NSU Series]
- Avoid use in environments where ozone is generated.
- Avoid use where vibration and impact are present.
- Avoid using this product where it will be subject to air with a relative humidity of 50% or more. (Performance will decrease sharply if the separation membrane gets wet with droplets (such as water).)
- Avoid using air containing corrosive gases (strong acidic gases such as hydrogen sulfide, sulfur dioxide, hydrogen chloride, fluorine, etc.) or strong alkali gases (amines, ammonia, caustic soda, etc.).

■The needle valve cannot be used as a stop valve that requires zero leakage. Slight leakage is allowed for in this product's specifications.

■Dust cannot be completely kept out of the flow path.

Install a final clean filter if dust could be a problem with the circuit. (Use anti-bacterial/bacteria-removing filters for food processes.)

■"Food Sanitation Act compliant" refers to products with materials conforming to the Food Sanitation Act.

■Use after confirming the structure and material, valve structure, working fluids, and working atmospheres of each component carefully for yourself.

■Internal parts may wear when the needle valve operates. If affected, take necessary measures such as installing a filter on the secondary side.

■Check the working circuit and working fluid.

To prevent drop in membrane unit performance, install the dryer, air filter and oil mist filter on the primary side, and remove water or oil. If the working fluid could contain hydrocarbons, install an activated carbon filter.

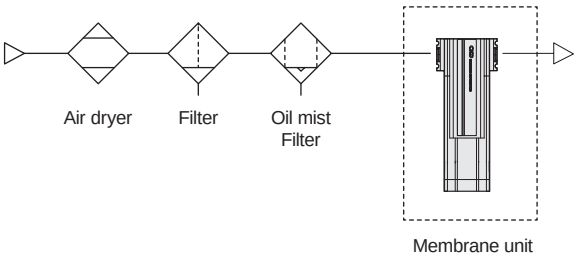

Precautions for the inline oxygen monitor

■Working environment
- Avoid installing this product where it will be subject to direct sunlight or rain.
- Using the oxygen sensor in the following atmospheres may cause measurement errors and lower performance of the component and oxygen detector.
- Use outside the 0 to 50°C temperature range or with elements other than air causes significant measurement errors. Avoid using in such conditions.
- The device cannot be used in air containing freon gas, silicon gases, corrosive gases such as SOx (sulfur oxides) or H_2S (hydrogen sulfide), or halogen gases such as Cl_2 (chlorine), F_2 (fluorine), or Br_2 (bromine), or in air containing constituents which cause these gases to separate at high temperatures of approximately 500°C.
- Use with air that contains combustible gas causes the gas to burn, lowering indications.
- Use in air containing large amounts of dust or oil mist leads to element deterioration.
- Coming into contact with water drops, solutions, or other liquids leads to element damage.
- The element will be damaged if used in locations with strong impacts or vibrations.
- Avoid use in locations with strong magnetic fields or significant electrical noise.
- Indications are not stabilized in environments in which pressure pulses (continuously changes) on a short cycle. Static pressure is required for stable measurements.

■Check the working circuit and working fluid.

To prevent decreased oxygen concentration monitor performance, install the dryer, air filter and oil mist filter on the primary side, and remove water or oil.

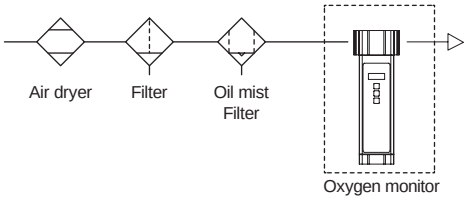

■This product does not have explosion-proof specifications. Since the detection element is heated by the heater, it may lead to an explosion if used in an explosive atmosphere.

■This product is not an oxygen detector. Do not use it as an oxygen concentration monitor in accordance with the Industrial Safety and Health Act.

■When using this product as a CE compliant product, prepare a dedicated power supply.

■Working conditions for CE compliance

This product is CE-marked, indicating conformity with the EMC Directives. The standard for the immunity for industrial environments applied to this product is EN61326-1. The following stability is applicable in an EMC Directive demand test environment.
Stability ±0.5% O_2 ±1 digit (for 0.00 to 10.00% O_2)
±1.0% O_2 ±1 digit (for 10.01 to 25.00% O_2)

Types of chemicals	Categories of chemicals	Main products of chemicals	General applications	Polycarbonate
Inorganic compounds	Acids	Hydrochloric acid, sulfuric acid, fluorine, phosphoric acid, chromic acid, etc.	Acid washing of metals, acidic degreasing solutions, coating treatment solution	x
	Alkalines	Caustic soda, caustic potash, calcium hydroxide, aqueous ammonia, Sodium carbonate, etc.	Alkaline degreasing solution for metals	x
	Inorganic salts	Sodium sulfide, potassium nitrate, potassium bichromate, sodium sulfate, etc.		x
Organic compounds	Aromatic hydrocarbons	Benzene, toluene, xylene, ethyl benzene, styrene etc.	Contained in paint thinner (Benzene, toluene, and xylene)	x
	Chlorinated aliphatic hydrocarbons	Methyl chloride, ethylene chloride, methylene chloride, acetylene chloride, chloroform, trichlene, perchlene, carbon tetrachloride	Organic solvent-based washing solution for metals (trichlene, perchlene, carbon tetrachloride, etc.)	x
	Chlorinated aromatic hydrocarbons	Chlorobenzene, dichlorobenzene, benzene hexachloride (B/H/C), etc.	Agricultural chemicals	x
	Petroleum components	Solvent, naphtha, gasoline		x
	Alcohols	Methyl alcohol, ethyl alcohol, cyclohexanol, benzyl alcohol	Used as antifreezing agent	x
	Phenol	Carbolic acid, cresol, naphthol, etc.	Disinfectant solution	x
	Ethers	Methyl ether, methyl ethyl ether, Ethyl ether	Additive of brake oil	x
	Ketones	Acetone, methyl ethyl ketone, cyclohexanone, acetophenone, etc.		x
	Carboxylic acids	Formic acid, acetic acid, butyl acid, acrylic acid, oxalic acid, phthalic acid, etc.	Dyes/oxalic acid are used for aluminum treatment Phthalic acid is used as a paint base	x
	Phosphate ester	Dimethyl phthalate (DMP)/diethyl phthalate (DEP)/dibutyl phthalate (DBP), dioctyl phthalate (DOP)	Lubricant, synthetic coolant, rust preventing agent additives Used as plasticizer for synthetic resin	x
	Oxyacids	Glycol acid, lactic acid, malic acid, citric acid, tartaric acid		x
	Nitro compounds	Nitromethane, nitroethane, nitroethylene, nitrobenzene, etc.		x
	Amines	Methylamine, dimethylamine, ethylamine, aniline, acetanilide, etc.	Additive of brake oil	x
	Nitriles	Acetonitrile, acrylonitrile, benzonitrile, acetoisonitrile, etc.	Raw material for nitrile rubber	x

Mounting, installation and adjustment

⚠CAUTION

- Do not step onto the body.

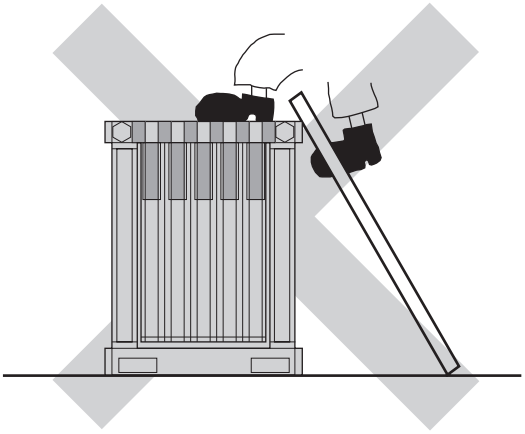

- When piping, remove coolant, rust preventing agents, contaminants, etc.
- Mount the air filter and oil mist filter so that the drain outlet faces straight downward. Use a bore size ø5.7 to 6 tube for drain discharge piping, and keep the length within 5 m. Avoid vertical piping. [NSU Series]
- Be sure to install an oil removing filter (M type) immediately before the membrane unit to remove water drops and oil. If oil adheres to the separation membrane, nitrogen concentration may decrease.
- Install the regulator on the outlet side of the membrane unit.
- When mounting NS (2 or 3 units), fix the inlet and outlet pipes or fix the body with a bracket.
- When installing NS (6 or more units), place on a solid and flat surface that does not vibrate and fix the base with anchor bolts.

Precautions for needle valves with adjusting dial

- To adjust the flow rate, turn the dial to the right to open or the left to close.
- After adjustment, lock the dial with the sliding lock lever.
- The flow rate control range is from "1" to "12" or "13" on the dial rotation display. Do not set the flow rate outside this range. Turning the dial to the fully closed or fully open position forcibly may result in failure or abnormal flow characteristics.
- Even when the needle is fully closed, the dial display is not 0.
  Calibration of the dial indicator flow rate is performed when the needle is not fully closed. Note that 0 is not necessarily indicated when the needle is fully closed. After "0", either "19" or no number at all is displayed.
- Do not remove the dial from the body.
  If the dial is removed, readjustment and calibration of flow characteristics cannot be performed.

Use/maintenance

⚠WARNING

■ **There may be oxygen deficiency in the nitrogen gas. Observe the following instructions when using.**
· Use in well ventilated locations.
· Ventilate the work area when nitrogen gas is being used.
· Perform periodical leakage inspections of nitrogen gas piping.

■ **Oxygen-rich gas is discharged from the exhaust port of the membrane unit, so be aware of the following points when installing the equipment.**
· Install away from sources of fire and flammable substances.
· Ventilate the work area during operation of the equipment.

■ **Do not use this product for purposes that directly concern human life.**

⚠CAUTION

■ Do not use reverse airflow.
Do not pressurize suddenly. The differential pressure gauge or mantle may be damaged. [NSU Series]

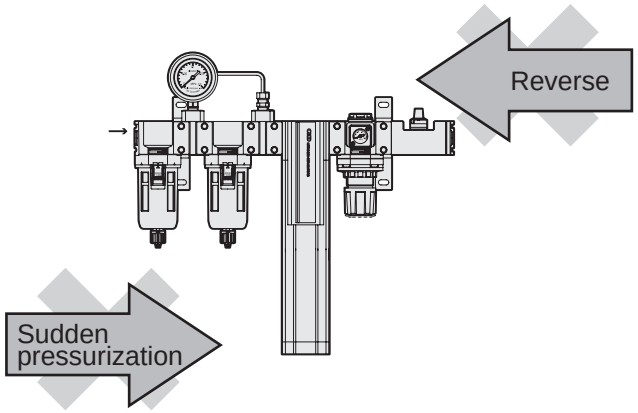

■ The oil mist filter comes to the end of its service life when the pressure drops to 0.07 MPa or after one year of use, whichever comes first. Replace the mantle with a new one at the end of its life. (Check the pressure drop with the differential pressure gauge.)
(Do not touch the urethane rubber foam layer when replacing the mantle)
[NSU Series]



■ The service life of the membrane unit differs according to the working conditions. As a guideline, replace the membrane every 3 to 5 years.

■ Confirm that pressure has been released before mounting or removing the bowl and bowl guard. [NSU Series]

■ Be aware that adequate time is necessary to obtain the required **nitrogen concentration** after compressed air is supplied.

Precautions for the inline oxygen monitor

■ Do not disassemble or modify, as this may cause malfunction.

■ The sensor may deteriorate depending on the working conditions. To maintain performance longer, yearly calibration is recommended.

Inline oxygen monitor

■ **Gas generator**



CONTENTS

Product introduction	1700
● PNA	1702
⚠ Safety precautions	1704

Visualize oxygen concentration under pressurization.



Limit current method

The PNA Series uses the limit current method. When voltage is applied to the zirconia element, an ion current flows with oxygen ions as carriers. When the oxygen concentration changes, the current characteristics change proportionally, enabling detection of the oxygen concentration. Durability and a long service life can be expected from this method.

Measurement principle of the limit current method

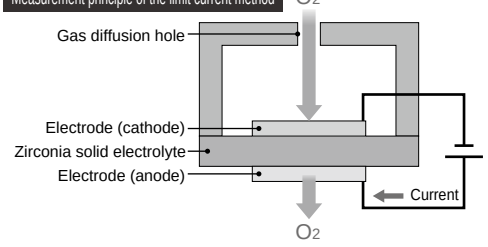

CE

Inline oxygen monitor

PNA Series

Examples of applications

Terminal concentration check

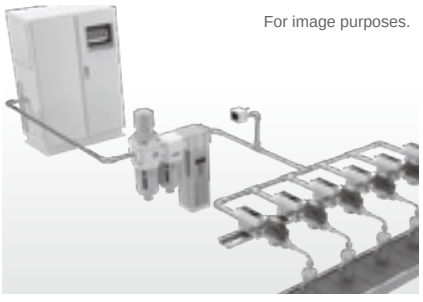

For image purposes.

- Concentration check at start of work
- Normal concentration check
- Understanding maintenance timing

Gas concentration check in explosion-proof areas

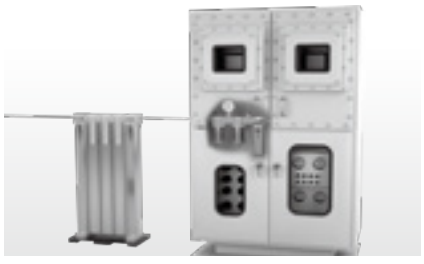

For image purposes.

- Concentration check at start of work
- Normal concentration check
- Alarm for hazardous concentrations

Nitrogen filling concentration check

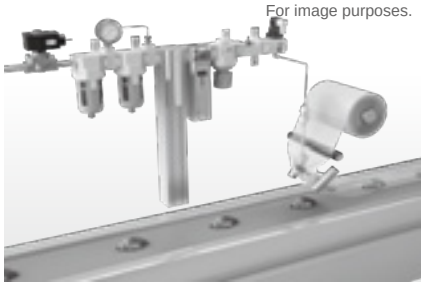

For image purposes.

- Concentration check when filling nitrogen
- Concentration setting

Checking gas for remaining oxygen removal



For image purposes.

- Oxygen concentration check of removal gas
- Status monitoring

Saves energy, piping, and space



Realized pressure resistant structure for inline use

Modular structure saves piping space

Conventional gas purging is no longer necessary

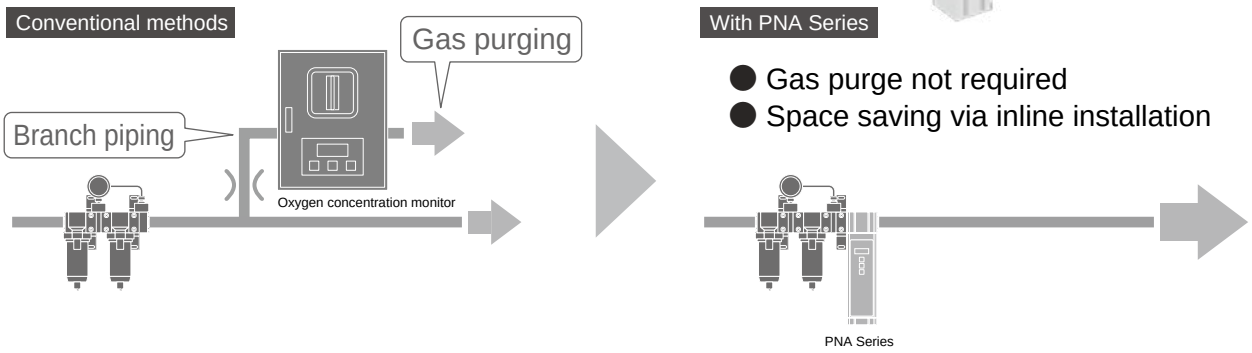

Easy to use

Oxygen/inert gas concentration display is switchable

› With 100-oxygen concentration, the inert gas concentration is clear at a glance.



Oxygen concentration display



Inert gas concentration display

Upper/lower limit switch output setting and analog output are available

› Alarms can be set for concentration changes, and status monitoring is possible.

With self-diagnostic function

› Keeps you posted about abnormalities in the detector element.

Degree of protection IP65 or equivalent

› Wet or dry, it still functions.

Pressure-resistant structure

› Usable at pressures from atmospheric pressure through 1.0 MPa.

Compatible with FP Series for secure food manufacturing processes

Safe and secure for food manufacturing processes.

Material compatible with the Food Sanitation Act
Fluid passage section resin/rubber

FP Food Process

This logo represents CKD's stance to provide you with safe components for supporting your food manufacturing processes.

CKD after-sales service

Traceability certificates (with traceability series variation diagram) can be issued.

The sensor of the oxygen concentration monitor may deteriorate depending on the working conditions.

Therefore, regular calibration is required to maintain stable performance.

For even longer consistent performance, we recommend the yearly calibration service.



Feel free to contact CKD for details on calibration and repair.



Inline oxygen monitor

PNA Series

Material compatible with the Food Sanitation Act

Purging not required due to the inline pressure resistant structure
A modular structure that can be connected to the Nitrogen Extraction Unit NS Series and F.R unit

Specifications

1 MPa ≈ 145.0 psi, 1 MPa = 10 bar

Item	Description
Measuring method	Zirconia solid electrolyte method
Sampling method	Natural diffusion
Display	Switchable oxygen concentration display and nitrogen concentration display (100-oxygen concentration)
Working fluid	Nitrogen-rich compressed air
Working pressure MPa	0 (≈0 psi, 0 bar) to 1.0 (≈145.0 psi, 10 bar)
Proof pressure MPa	1.5 (≈217 psi, 15 bar)
Ambient temperature, humidity	0 (32°F) to 50°C (122°F), 80% RH or less (no condensation)
Fluid temperature	0 (32°F) to 50°C (122°F) (no condensation)
Storage ambient temperature, humidity	-10 (14°F) to 60°C (140°F), 80% RH or less (no condensation)
Max. flow rate L/min (ANR)	500 *1
Measured range $\%O_2$	0.00 to 25.00
Accuracy *2	±0.05% O_2 ±1 digit (for 0.00 to 1.00% O_2) ±0.10% O_2 ±1 digit (for 1.01 to 2.50% O_2) ±0.5% O_2 ±1 digit (for 2.51 to 10.00% O_2) ±1.0% O_2 ±1 digit (for 10.01 to 25.00% O_2)
Response time	90% response within 20 seconds *3
Analog output	4 to 20 mA current output (for 0.00 to 25.00% O_2)
Load resistance of analog output	0 to 400 Ω
Analog output accuracy	0.064 mA/0.1% O_2
Switch output	Set value and detection element abnormality: 1 (relay output)
Switch output capacity	24 VDC, 1 A
Power supply voltage	24 VDC ±15% (with AC adapter: 100 to 240 VAC)
Power consumption	10 W or less
Degree of protection	IP65 or equivalent
EMC Directive	EN61326-1
Weight kg	1.6
Warmup time	About 5 minutes after turning on the power supply *4

*1 For values exceeding 500 L/min (ANR), consult with CKD.
*2 Value in dry gas composed of oxygen and nitrogen.
*3 Response times are values at a flow rate of 5 L/min (ANR) or higher.
*4 Analog output and switch output are not output during warm up.

How to order main body

PNA - 10A - N - FP2

Ⓐ Port size
Ⓑ Traceability

*Connector cable is not included.
For details, refer to page 1703.

Code	Description
Ⓐ Port size	
10A	Rc3/8
10B	G3/8
10C	NPT3/8
Ⓑ Traceability	
N	None
M	Traceability certification with series variation diagram and company certification

[Example of model No.]

PNA-10A-M-FP2

Ⓐ Port size: Rc3/8
Ⓑ Traceability: Traceability certification with series variation diagram and company certification

Dimensions

Cannot be disassembled

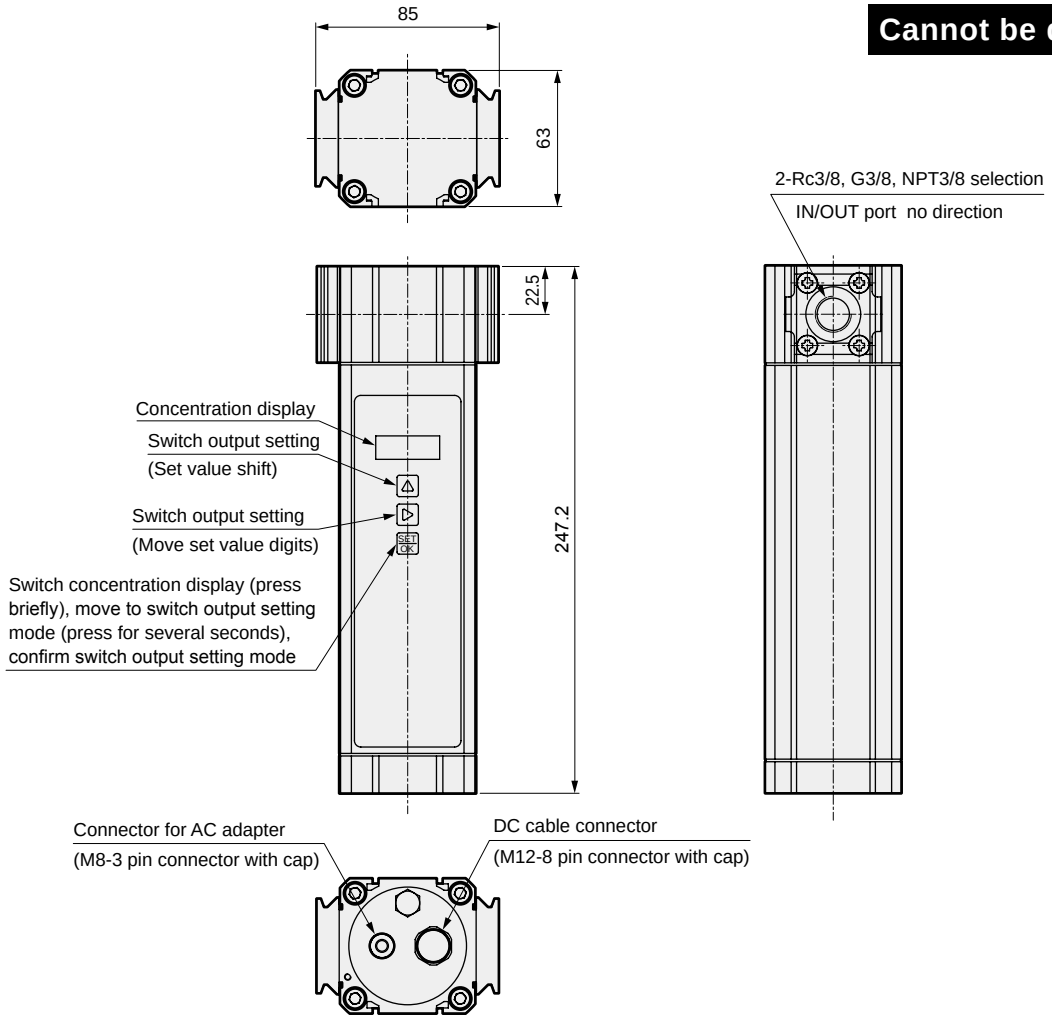

How to order connector cable and dimensions

*Connector cable is sold separately from the body.

● DC cable

Use when driving with a DC power supply and when using analog output or switch output.

Model No.	L dimensions
PNA-1D	1000
PNA-3D	3000
PNA-5D	5000

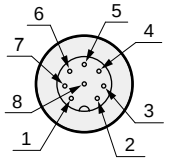

No.	Cable color	Description
1	White	Power supply +
2	Brown	Power supply -
3	Green	Analog output+
4	Yellow	Analog output-
5	Gray	Contact output (relay output)
6	Pink	
7	Blue	–
8	–	–

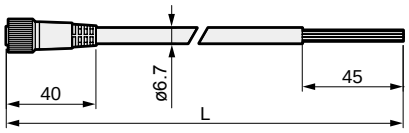

● AC adapter

Use when driving with an AC power supply.

Model No.	Description
PNA-A	AC adapter single unit A
PNA-AG	AC adapter single unit + conversion plug set *Global power supply conversion plugs B, C, O and BF included.

· Plug shape

B type	C type	O type	BF type
			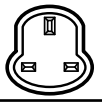

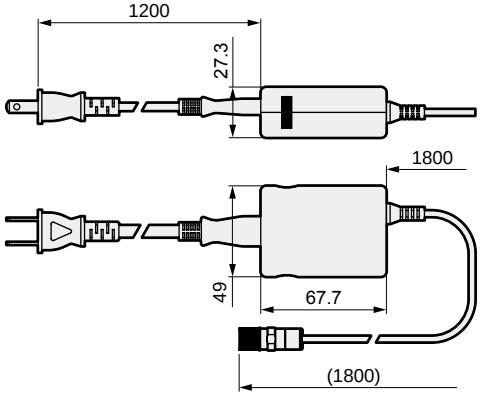

Safety Precautions

Be sure to read this section before use.
For general precautions for pneumatic components, refer to Intro Page 63.
Although the above general catalog states that products are not applicable for equipment or applications with direct contact with beverages/foodstuffs, the FP2 Series products can be used in such applications as long as they are within the range of the product specifications.

Product-specific cautions: Oxygen Monitor PNA Series

Design/selection

■ Working environment
- Avoid installing this product where it will be subject to direct sunlight or rain.
- In the following atmospheres, the oxygen concentration monitor may generate measurement errors, or the performance of the components or oxygen detection element may suffer.
- Use outside the 0 to 50°C temperature range or with elements other than air causes significant measurement errors. Avoid using in such conditions.
- The device cannot be used in air containing freon gas, silicon gases, corrosive gases such as SOx (sulfur oxides) or H_2S (hydrogen sulfide), or halogen gases such as Cl_2 (chlorine), F_2 (fluorine), or Br_2 (bromine), or in air containing constituents which cause these gases to separate at high temperatures of approximately 500°C.
- Use with air that contains combustible gas causes the gas to burn, lowering indications.
- Use with air containing large amounts of dust or oil mist leads to element deterioration.
- Coming into contact with water drops, solutions, or other liquids leads to element damage.
- Use in locations subject to strong impacts or vibration leads to element damage.
- Avoid use in locations with strong magnetic fields or significant electrical noise.
- Indications are not stabilized in environments in which pressure pulses (continuously changes) on a short cycle. Static pressure is required for stable measurements.

■ "Food Sanitation Act compliant" refers to products with materials conforming to the Food Sanitation Act.

■ Use after confirming the structure and material, valve structure, working fluids, and working atmospheres of each component carefully yourself.

■ Check the working circuit and working fluid.
To prevent decreased oxygen concentration monitor performance, install the dryer, air filter and oil mist filter on the primary side, and remove water or oil.

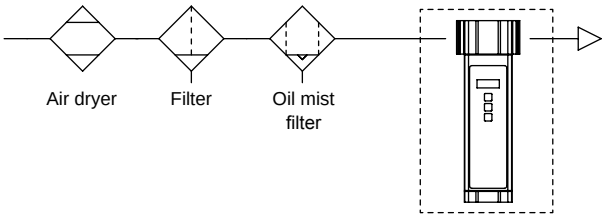

■ This product does not have explosion-proof specifications. Since the detection element is heated by the heater, it may lead to an explosion if used in an explosive atmosphere.

■ This product is not an oxygen detector. Do not use it as an oxygen concentration monitor in accordance with the Industrial Safety and Health Act.

■ When using this product as a CE compliant product, prepare a dedicated power supply.

■ Working conditions for CE compliance
This product is CE-marked, indicating conformity with the EMC Directives.
The standard for the immunity for industrial environments applied to this product is EN61326-1. The following stability is applicable in an EMC Directive demand test environment.
Stability ±0.5% O_2 ±1 digit (for 0.00 to 10.00% O_2)
±1.0% O_2 ±1 digit (for 10.01 to 25.00% O_2)

Mounting, installation and adjustment

■ When piping, remove coolant, rust preventing agents, contaminants, etc.

■ Install an oil removing filter (M type) in front of the oxygen monitor to remove all water drops and oil.

Use/maintenance

■ Do not disassemble or modify, as this may cause malfunction.

■ The sensor may deteriorate depending on the usage conditions. Calibration once a year is recommended for maintaining long-term performance.

MEMO

Main line unit

Page

CONTENTS

System configuration	1708
Roles and functions of main line components	1710
Series variation	1712
Displaying air flow rate	1714
Cost of air and energy saving	1715
Dew point	1716
Selection guide of air dryer	1718
Refrigeration air dryer	1721
Desiccant air dryer	1785
High polymer membrane air dryer	1809
Main line filter	1835
Drain discharger	1903

Main line component system configuration

Medium main line filter device recommended system configuration

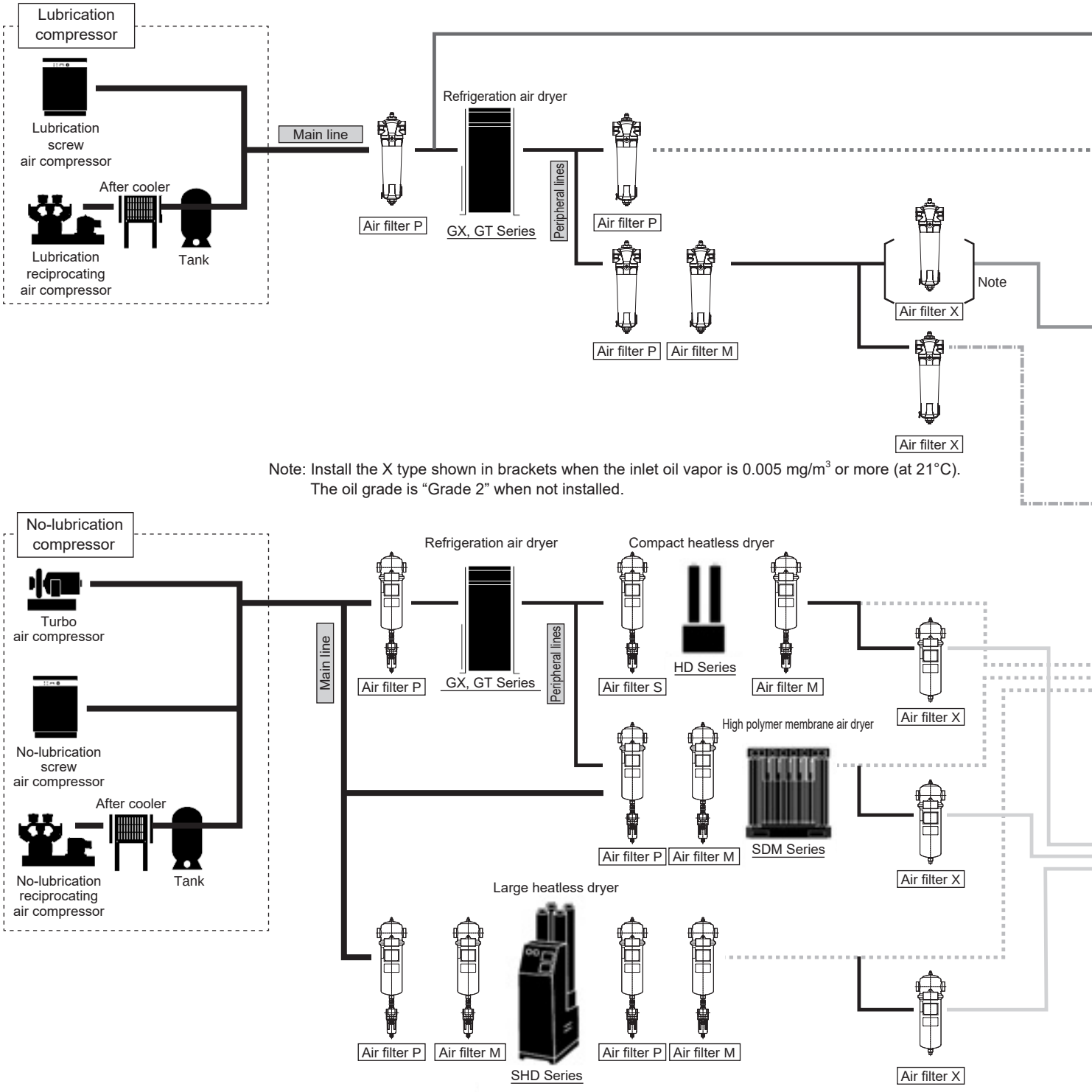

Note: Install the X type shown in brackets when the inlet oil vapor is 0.005 mg/m^3 or more (at 21°C).
The oil grade is “Grade 2” when not installed.

JIS B 8392-1:2012 Compressed air purity grade

Grade	Solid particles				Humidity and moisture		Oil
	Max. number of particles per 1 m^3 for particle diameter d (μm)			Mass conc. Cp	Pressure dew point	Water conc. Cw	Total oil conc.
	0.1 < d ≤ 0.5	0.5 < d ≤ 1.0	1.0 < d ≤ 5.0	mg/m^3	°C	g/m^3	mg/m^3
0	Conditions stricter than Grade 1 to be specified by user or supplier.						
1	≤ 20,000	≤ 400	≤ 10	-	≤ -70	-	≤ 0.01
2	≤ 400,000	≤ 6,000	≤ 100	-	≤ -40	-	≤ 0.1
3	-	≤ 90,000	≤ 1,000	-	≤ -20	-	≤ 1
4	-	-	≤ 10,000	-	≤ +3	-	≤ 5
5	-	-	≤ 100,000	-	≤ +7	-	-
6	-	-	-	0 < Cp ≤ 5	≤ +10	-	-
7	-	-	-	5 < Cp ≤ 10	-	Cw ≤ 0.5	-
8	-	-	-	-	-	0.5 < Cw ≤ 5	-
9	-	-	-	-	-	5 < Cw ≤ 10	-
X	-	-	-	Cp > 10	-	Cw > 10	> 5

JIS B 8392-1:2003 has been revised to JIS B 8392-1:2012.

For example,
What is Grade 1:2:1?

- Solid particles 0.1 to 0.5 μm are 20,000 particles or less,
  0.5 to 1.0 μm are 400 particles or less, and
  1.0 to 5.0 μm are 10 particles or less
- Pressure dew point -40°C or less
- Oil concentration 0.01 mg/m^3 or less.

Air quality	Applications	Impurities in air			Grade
		Solid particles	Moisture	Oil content	
Water drip removal air/ coarse dust removal air	For construction/civil engineering machinery Air for cleaning (dry air not required)	1 µm	-	-	2:-:-
General dry air	Standard pneumatic components Standard pneumatic tools Labor saving components Jigs and tools for air Air chucks Air vices Air for cleaning precision components	1 µm	Pressure dew point 10°C	0.6 mg/m^3	2.6.3
			Pressure dew point 7°C		2.5.3
Dry air (oil-free)	For instrumentation For measurement Sequence control High-grade paint	0.01 µm	Pressure dew point 10°C	0.01 mg/m^3 [0.003 mg/m^3]	1.6.1
			Pressure dew point 7°C		1.5.1
Dry air (odorless)	Food product industry (where air is not directly blown onto food) Pharmaceutical industry For stirring/transporting/drying/packaging/ brewing	0.01 µm	Pressure dew point 10°C	0.003 mg/m^3	1.6.1
			Pressure dew point 7°C		1.5.1
Ultra dry air (oil-free)	Ozone generator Powder transfer Drying of atmospheric gas for furnaces Drying of high-voltage generator insulation gas Drying of computer rooms For centralized control instruments	0.01 µm	Pressure dew point -20°C	0.01 mg/m^3	1.3.1
			Pressure dew point -40°C		1.2.1
			Pressure dew point -60°C		1.2.1
Ultra dry air (odorless)	Food product industry (where air is not directly blown onto food) Pharmaceutical industry For stirring/transporting/drying/packaging/ brewing	0.01 µm	Pressure dew point -20°C	0.003 mg/m^3	1.3.1
			Pressure dew point -40°C		1.2.1
			Pressure dew point -60°C		1.2.1

*1: The system No. is based on the P2 class.
X in the table indicates odor removing. "-" indicates no specification.

⚠ Precautions for system selection

*1: If your conditions are different, refer to the specifications in the catalog to select a model.
*2: This example of system selection is based on an air-cooling refrigeration air dryer. When selecting based on an air-cooling refrigeration air dryer, since standard processing air flow rate may differ, model No. of filter may vary.
Contact CKD for details.
*3: Air filter and oil mist filter are to be used where the inlet air temperature is 60°C or less, and X type where the inlet air temperature is 30°C or less.
If air temperature from the secondary side of the refrigeration air dryer is high, keep enough distance from the refrigeration air dryer to maintain a temperature no greater than the inlet air temperature.
*4: This system cannot be used for high pressure specifications (1 to 1.6 MPa). Consult with CKD for details.
*5: Use anti-rust processed materials for piping (zinc plated pipe, lining pipe or stainless steel pipe).
*6: If a processing air rate larger than the refrigeration air dryer supplies may be used instantaneously, install a tank to the secondary side of the refrigeration air dryer. Installing a tank supplies stable moisture removed air.
*7: The air filter at the secondary side of the refrigeration air dryer can be used as a pre-filter before an oil mist filter.
*8: Depending on working conditions, condensation may form on the inside of the refrigeration air dryer and drip to the floor. To prevent water drops from flowing out, install a drain-pan, etc., before installing the dryer.
*9: Consult with CKD for energy-saving systems.
*10: Install a filter immediately before the equipment to be used to remove contaminants caused in piping.

Roles and functions of main line components

	Appearance
Main line filter	 ·AF2 Series  ·AF4000 Series  ·AF3000 Series  ·AF5000 Series
Air dryer	 ·GX Series 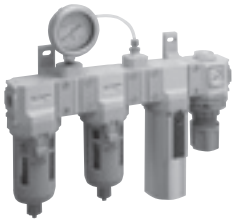 ·SU Series  ·SDM Series  ·GT Series  ·HD Series  ·SHD Series

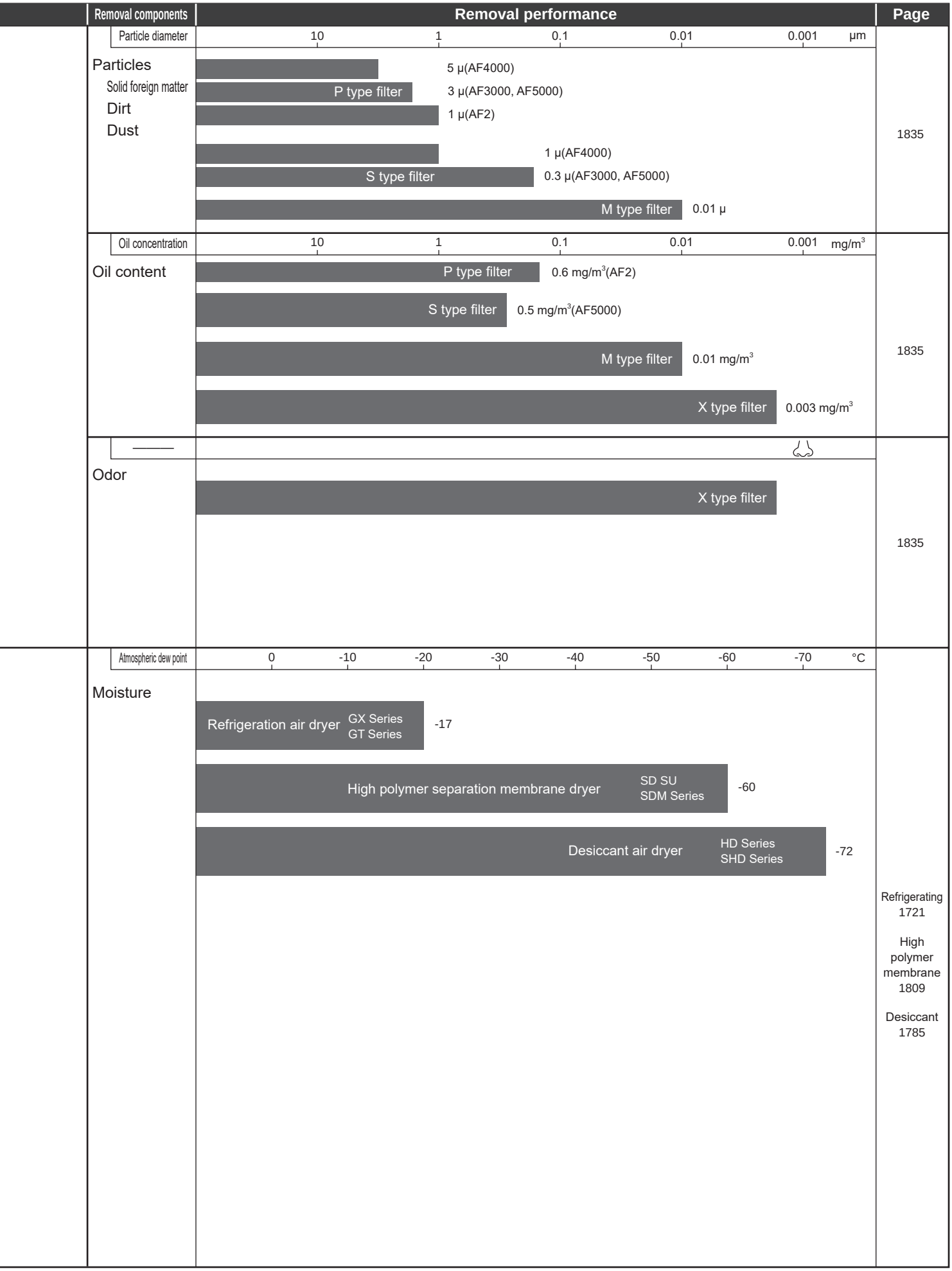
Removal components
Removal performance
Page
Particle diameter
10
1
0.1
0.01
0.001
μm
Particles
Solid foreign matter
Dirt
Dust
5 μ(AF4000)
P type filter
3 μ(AF3000, AF5000)
1 μ(AF2)
1835
1 μ(AF4000)
S type filter
0.3 μ(AF3000, AF5000)
M type filter
0.01 μ
Oil concentration
10
1
0.1
0.01
0.001
mg/m3
Oil content
P type filter
0.6 mg/m3(AF2)
S type filter
0.5 mg/m3(AF5000)
M type filter
0.01 mg/m3
1835
X type filter
0.003 mg/m3
Odor
X type filter
1835
Atmospheric dew point
0
-10
-20
-30
-40
-50
-60
-70
°C
Moisture
Refrigeration air dryer
GX Series
GT Series
-17
High polymer separation membrane dryer
SD SU
SDM Series
-60
Desiccant air dryer
HD Series
SHD Series
-72
Refrigerating
1721
High
polymer
membrane
1809
Desiccant
1785

Air compressor	Refrigeration air dryer				Main line filter	Micro alescer
kW (horsepower) (*5)	Standard processing air flow rate m^3/min(ANR)	GX	GT	Water cooling	P type (Water and solid removing)	S type (Oil removing)
to 0.75 (to 1)	0.10/0.11	GX3203D GX5203D	-	-	F2000-10-W-F1 (5 μ)	M2000-10-W-F1S (0.3μ)
1.5(2)	0.20/0.22	GX3203D GX5203D	-	-	F2000-10-W-F1 (5 μ)	M2000-10-W-F1S (0.3μ)
2.2(3)	0.30/0.35	GX3203D GX5203D	-	-	F3000-10-W-F (5 μ)	M3000-10-W-F1S (0.3μ)
3.7(5)	0.40/0.52	GX3206D GX5204D	-	-	F3000-10-W-F (5 μ)	M4000-10-W-F1S (0.3μ)
5.5 (7.5)	0.64/0.72	GX3206D GX5206D	-	-	F4000-15-W-F (5 μ)	M4000-15-W-F1S (0.3μ)
7.5(10)	1.22/1.32	GX3208D GX5208D	-	-	F6000-20-W-F (5 μ)	M6000-20-W-F1S (0.3μ)
11(15)	1.65/1.82	GX3211D GX5211D	-	-	F8000-25-W-F (5 μ)	M8000-25-W-F1S (0.3μ)
15(20)	2.40/2.80	GX3215D GX5215D	-	-	AF2-05P25A (1μ)	
					AF4004P-25 (5 μ)	AF4004S-25 (1μ)
22(30)	3.70/4.20	GX3222D GX5222D	-	-	AF2-08P32A (1μ)	
					AF4007P-40 (5 μ)	AF4007S-40 (1μ)
37(50)	5.70/6.10	GX3237D GX5237D	-	-	AF2-08P32A (1μ)	
					AF4010P-40 (5 μ)	AF4010S-40 (1μ)
55(75)	8.40/9.80	GX3255D GX5255D	-	-	AF2-13P50A (1μ)	
					AF4013P-50 (5 μ)	AF4013S-40 (1μ)
75(100)	11.4/12.6	GX5275D	GT9075D	GT9075WD	AF2-20P50A (1μ)	
					AF3016P-50 (3 μ)	AF3016S-50 (0.3 μ)
					AF5016P-50 (3μ)	AF4020S-50 (1μ) AF5016S-50 (0.3 μ)
90(120)	16.3/18.9	-	GT9090D	GT9090WD	AF2-20P50A (1μ)	
					AF3032P-80 (3 μ)	AF3032S-80 (0.3 μ)
					AF5032P-80 (3 μ)	AF4020S-50 (1μ) AF5032S-50 (0.3 μ)
120(160)	20.8/23.8	-	GT9120D	GT9120WD	AF2-24P65A (1μ)	
					AF3032P-80 (3 μ)	AF3032S-80 (0.3 μ)
					AF5032P-80 (3 μ)	AF5032S-50 (0.3 μ)
150(200)	25.9/30.1	-	GT9150D	GT9150WD	AF3032P-80 (3 μ)	AF3032S-80 (0.3 μ)
					AF5032P-80 (3 μ)	AF5032S-80 (0.3 μ)
190(250)	32.1/38.1	-	GT9190D	GT9190WD	AF3048P-100 (3 μ)	AF3048S-100 (0.3 μ)
					AF5048P-100 (3 μ)	AF5048S-100 (0.3 μ)
240(320)	36.5/43.0	-	GT9240	GT9240W	AF3048P-100 (3 μ)	AF3048S-100 (0.3 μ)
					AF5048P-100 (3 μ)	AF5048S-100 (0.3 μ)
300(400)	44.2/52.0	-	GT9300	GT9300W	AF3064P-100 (3 μ)	AF3064S-100 (0.3 μ)
					AF5064P-100 (3 μ)	AF5064S-100 (0.3 μ)
380(505)	55.2/65.0	-	GT9380	GT9380W	AF3080P-100 (3 μ)	AF3080S-100 (0.3 μ)
					AF5080P-100 (3 μ)	AF5080S-100 (0.3 μ)
450(600)	70.3/82.8	-	GT9450	GT9450W	AF3096P-150 (3 μ)	AF3096S-150 (0.3 μ)
					AF5096P-150 (3 μ)	AF5096S-150 (0.3 μ)
710(950)	139.1	-	-	GT9710WV2	AF3160P-200 (3 μ)	AF3160S-200 (0.3 μ)
					AF5160P-200 (3 μ)	AF5160S-200 (0.3 μ)
960(1280)	184.2	-	-	GT9960WV2	AF3192P-200 (3 μ)	AF3192S-200 (0.3 μ)
					AF5192P-200 (3 μ)	AF5192S-200 (0.3 μ)

Micro alescer		Micro alescer	Drain discharger		Flow rate sensor
	M type (High-performance oil removing)	X type (Odor removing)	DT, 5100 type	DB type	
	M2000-10-W-F1 (0.01 μ)	M2000-10-W-X	DT3010-W DT4010-W	DB3003D	PF500F
	M2000-10-W-F1 (0.01 μ)	M2000-10-W-X	DT3000-W DT4000-W DT3010-W DT4010-W	DB3003D	PF500F
	M4000-10-W-F1 (0.01 μ)	M4000-10-W-X	DT3000-W DT4000-W DT3010-W DT4010-W	DB3003D	PF500F
	M6000-20-W-F1 (0.01 μ)	M6000-20-W-X	DT3000-W DT4000-W DT3010-W DT4010-W	DB3003D	PF500F PF1000F
	M6000-20-W-F1 (0.01 μ)	M6000-20-W-X	DT3000-W DT4000-W DT3010-W DT4010-W	DB3003D	PF1000F
	M8000-20-W-F1 (0.01 μ)	M8000-20-W-X	DT3000-W DT4000-W DT3010-W DT4010-W	DB3003D	PF2000F
	M8000-25-W-F1 (0.01 μ)	M8000-25-W-X1	DT3000-W DT4000-W DT3010-W DT4010-W	DB3003D	PF2000F
	AF2-05M25A (0.01 μ)	AF2-05X25A	DT3000-W DT4000-W DT3010-W DT4010-W	DB3003D	PF4000F
	AF4004M-25 (0.01 μ)	AF4004X-25			
	AF2-08M32A (0.01 μ)	AF2-08X32A	DT4000-W DT4010-W	DB1006E DB3006E	PF8000F
	AF4007M-40 (0.01 μ)	AF4007X-40			
	AF2-08M32A (0.01 μ)	AF2-08X32A	DT4000-W DT4010-W	DB1006E DB3006E	PF8000F
	AF4010M-40 (0.01 μ)	AF4010X-40			
	AF2-13M50A (0.01 μ)	AF2-13X50A	DT4000-W DT4010-W 5100-4C	DB1006E DB3006E	PF16000F
	AF4013M-50 (0.01 μ)	AF4013X-50			
	AF2-20M50A AF3016S-50 (0.01 μ)	AF2-20X50A AF3016S-50	5100-4C	DB1024 DB3024	PF16000F
	AF4020M-50 AF5016M-50 (0.01 μ)	AF4020X-50 AF5016X-50			
	AF2-20M50A AF4020M-50 (0.01 μ)	AF2-20X50A AF4020X-50	5100-4C	DB1024 DB3024	-
	AF4020M-50 AF5032M-80 (0.01 μ)	AF4020X-50 AF5032X-80			
	AF2-24M65A AF3032M-80 (0.01 μ)	AF2-24X65A AF3032X-80	5100-4C	DB1024 DB3024	-
	AF5032M-80 (0.01 μ)	AF5032X-80			
	AF3032M-80 (0.01 μ)	AF3032X-80	5100-4C	DB1024 DB3024	-
	AF5032M-80 (0.01 μ)	AF5032X-80			
	AF3048M-100 (0.01 μ)	AF3048X-100	5100-4C	DB1024 DB3024	-
	AF5048M-100 (0.01 μ)	AF5048X-100			
	AF3048M-100 (0.01 μ)	AF3048X-100	5100-4C	DB1024 DB3024	-
	AF5048M-100 (0.01 μ)	AF5048X-100			
	AF3064M-100 (0.01 μ)	AF3064X-100	5100-4C	DB1024 DB3024	-
	AF5064M-100 (0.01 μ)	AF5064X-100			
	AF3080M-100 (0.01 μ)	AF3080X-100	5100-4C	DB1024 DB3024	-
	AF5080M-100 (0.01 μ)	AF5080X-100			
	AF3096M-150 (0.01 μ)	AF3096X-150	5100-4C	DB1024 DB3024	-
	AF5096M-150 (0.01 μ)	AF5096X-150			
	AF3160M-200 (0.01 μ)	AF3160X-200	5100-4C	DB1024 DB3024	-
	AF5160M-200 (0.01 μ)	AF5160X-200			
	AF3192M-200 (0.01 μ)	AF3192X-200	5100-4C	DB1090D DB3090D	-
	AF5192M-200 (0.01 μ)	AF5192X-200			

*1: This list is for selection guide. Refer to the appropriate catalog for selection, and select a model after checking installation and operating conditions.
*2: Drain discharger DB Series cannot be used with the refrigeration air dryer.
*3: Use AF2 and AF3000 Series in oil type compressor systems, and AF4000 and AF5000 Series in oil free type compressor systems.
*4: 1 PS (horsepower) is equivalent to 0.7355kW, but conventionally expressed as 1PS=0.75kW.

Displaying air flow rate

Display values of air flow rate differ depending on the state of the air. Pneumatic components must be selected upon checking the condition for displayed flow rate.
There are two main methods for displaying the air flow rate.

(1) Flow rate unit expressing volume in reference state: ℓ/min (normal) (Nℓ/min.)

(2) Flow rate unit expressing volume in standard condition: ℓ/min (ANR)

The reference state refers to: Absolute pressure: 101.3 KPa
Temperature: 0°C
Relative humidity: 0%
This state is usually used for the flow rate meter.
The standard condition refers to: Absolute pressure: 101.3 KPa
Temperature: 20°C
Relative humidity: 65%
This is the standard condition (refer to Japan Fluid Power Association Standards JPAS008) in which people are active.
The approximation formula is usually used to convert both conditions.

1 ℓ/min(normal)(1 Nℓ/min)≈1.08 ℓ/min(ANR)

Even if the air flow rate is the same, smaller values are displayed for N ℓ/min. Under the Japan Fluid Power Association Standards, the air flow rate unit is ANR (Note). Therefore, all flow rates in catalogs are displayed in ANR. (Excluding flow rate sensor)
Other than the above, some flow rates are displayed with the manufacturer's original reference values. In these cases, make sure to convert values to ANR when selecting the model.

(Note) ANR is the abbreviation of a French term:
Conditions de l'atmosphére normale de référence (Standard reference atmospheric conditions).

Cost of air and energy saving

1 Cost of air

The cost of compressed air is calculated as the total sum of all expenses required to compress 1 m^3 of air to a specified pressure with atmospheric pressure conversion.

$$\text{Cost of compressed air} = \frac{\text{Electricity cost (compressor/auxiliary components such as dryer, pump, etc.) + facility depreciation cost + running cost + maintenance cost (yen/year)}}{\text{Amount of discharged compressed air } (m^3/\text{year})}$$

When simply calculated from equipment performance, it differs due to contracted basic power rates. However, it is generally set to 2.5 yen/m^3. Practically, the used flow rate (air discharge rate) differs with the daily operation time zone, such as daytime, nighttime, weekday, or month. When the flow rate and pressure change, power consumption also changes. To calculate the actual cost of air, the average annual cost must be found by measuring the total amount of power and amount of used air flow rate through the year.
When assuming the general operation state, some calculation examples provide 3.0 yen/m^3 for the cost of air.

The cost of air must be understood to promote energy conservation of the pneumatic system, and to illustrate the improvement effect. This is also important for increasing awareness in making improvements.

2 Points of energy saving

(1) Suppressing wasted air consumption
- ·Reduction of air leakage
- ·Review and reduction of air blow consumption
- ·Optimization of pneumatic component sizing, etc.

(2) Selecting devices and components with low power consumption

(3) Lowering pneumatic pressure

Driving the compressor shaft, which consumes the most energy, is reduced by lowering discharge pressure. (Example: If using a screw, savings of 8% or more are achieved by lowering discharge from 0.7 to 0.6 MPa). Thus, the working pressure at the end must be reduced and pneumatic components with small pressure loss must be selected.

3 Efforts by CKD

·High efficiency is pursued in every aspect of CKD products.
By enhancing efficiency, high processing performance is realized with small power consumption.
·By reducing pressure loss of components, low pressure air sources can be used, reducing compressor shaft force (power consumption).

Dew point

The term dew point is used with dryers to express their performance. Along with the valve's effective cross-sectional area, Cv, and cylinder tube bore size, this is one of the most important specifications when selecting a model.

There are two dew points, which are atmospheric dew point and pressure dew point. Both are used often so the differences between them must be understood.

What is the dew point?

In addition to nitrogen and oxygen, air contains water in the form of vapor. Air can contain a larger amount of water vapor when the temperature is higher. The point where the water vapor changes to water drops (dew) when lowering the temperature is called the dew point.
When a cold drink is poured into a glass on a hot day, dew is formed soon on the outside of the glass. This happens because the air around the glass is cooled and the water vapor in the air becomes water drops.

☆ Water vapor is invisible. Steam in a bath room is fine water drops.

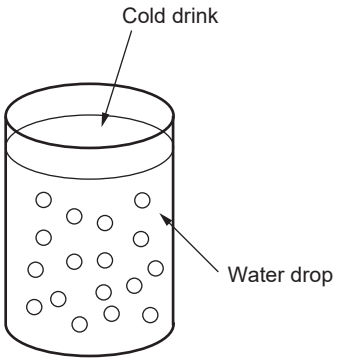

The air we breathe is called atmospheric air. The temperature at which water drops form in atmospheric air (dew point) is strictly called

Atmospheric dew point

Pressure dew point

As shown in the lower right figure, the temperature at which the water vapor changes to water drops in compressed air is called

Pressure dew point

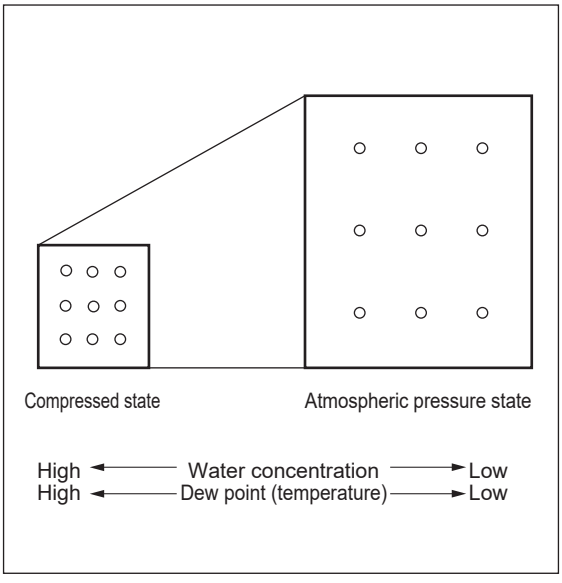

Atmospheric dew point and pressure dew point

When the air pressure and temperature are known, the pressure dew point is determined from the atmospheric dew point, and vice versa, using a saturated water vapor rate table or pressure dew point - atmospheric dew point conversion table (provided in catalog).

Dryer types and achieved dew point

A dryer is the device to remove water vapor from compressed air to create dry air. The achieved dew point differs by the type of dryer.

Dew point conversion table

[°C]

Pressure dew point	15	10	7	5	3	-8	-10	-20	-30	-31	-40	-43	-50	-60	-70
Atmospheric dew point	-13	-17	-19	-20	-22	-30	-32	-40	-48	-50	-57	-60	-66	-74	-83

Note) The pressure dew point is for 0.7 MPa.

Saturated vapor rate table (relative humidity 100%)

(Unit: g/m^3)

Temperature in 10°C units	Temperature at 1°C unit 0	1	2	3	4	5	6	7	8	9
90	418	433	449	465	481	498	515	532	551	569
80	291	302	313	325	337	350	363	376	390	404
70	197	205	213	222	231	240	250	259	270	280
60	130	135	141	147	154	160	167	174	182	189
50	82.8	86.7	90.8	95.0	95.5	104	109	114	119	124
40	51.1	53.7	56.4	59.3	62.2	65.3	68.5	71.9	75.4	79.0
30	30.3	32.0	33.7	35.6	37.6	39.6	41.7	43.9	46.2	48.6
20	17.2	18.3	19.4	20.6	21.8	23.0	24.4	25.8	27.2	28.7
10	9.39	10.0	10.7	11.3	12.1	12.8	13.6	14.5	15.4	16.3
0	4.85	5.19	5.56	5.94	6.36	6.79	7.26	7.75	8.27	8.81
- 0	4.84	4.84	4.13	3.82	3.52	3.24	2.99	2.75	2.53	2.33
-10	2.14	1.96	1.80	1.65	1.51	1.39	1.27	1.16	1.06	0.967
-20	0.882	0.804	0.732	0.667	0.607	0.551	0.501	0.454	0.412	0.373
-30	0.338	0.305	0.276	0.249	0.225	0.203	0.183	0.164	0.148	0.133
-40	0.119	0.107	0.0955	0.0854	0.0763	0.0681	0.0608	0.0541	0.0482	0.0428
-50	0.0381	0.0338	0.0299	0.0265	0.0234	0.0207	0.0183	0.0161	0.0142	0.0125
-60	0.0109	0.00959	0.00840	0.00734	0.00642	0.00560	0.00488	0.00425	0.00369	0.00320
-70	0.00277	0.00240	0.00207	0.00179	0.00154	0.00133	0.00114	0.000977	0.000836	0.000715
-80	0.000610	0.000520	0.000442	0.000376	0.000318	0.000269	0.000228	0.000192	0.000162	0.000136
-90	0.000114	0.0000952	0.0000795	0.0000663	0.0000551	0.0000458	0.0000379	0.0000313	0.0000259	0.0000213

Reading saturated vapor rate table

The temperature in 10°C units is shown in the vertical column, and the temperature in 1°C units is shown in the horizontal row.
(Example) Finding saturated vapor rate for 32°C.

Temperature in 10°C units	Temperature at 1°C unit 0	1	2	3		
40						
30			33.7			
20						

33.7 g/m^3 can be selected from the above table.

Reading pressure dew point - atmospheric dew point conversion table

This table is used to convert the pressure dew point at each pressure into the atmospheric dew point, or vice versa.
(Example) Obtaining the atmospheric dew point when the pressure is 0.7 MPa and the pressure dew point is 5°C.

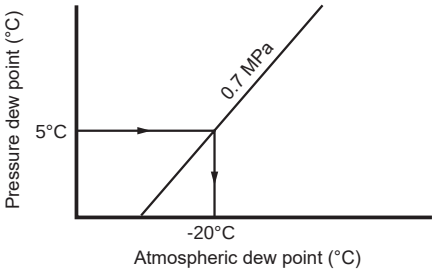

When the pressure dew point of 5°C at 0.7 MPa pressure is converted to the atmospheric dew point, the result is -20°C.

Pressure dew point - atmospheric dew point conversion table

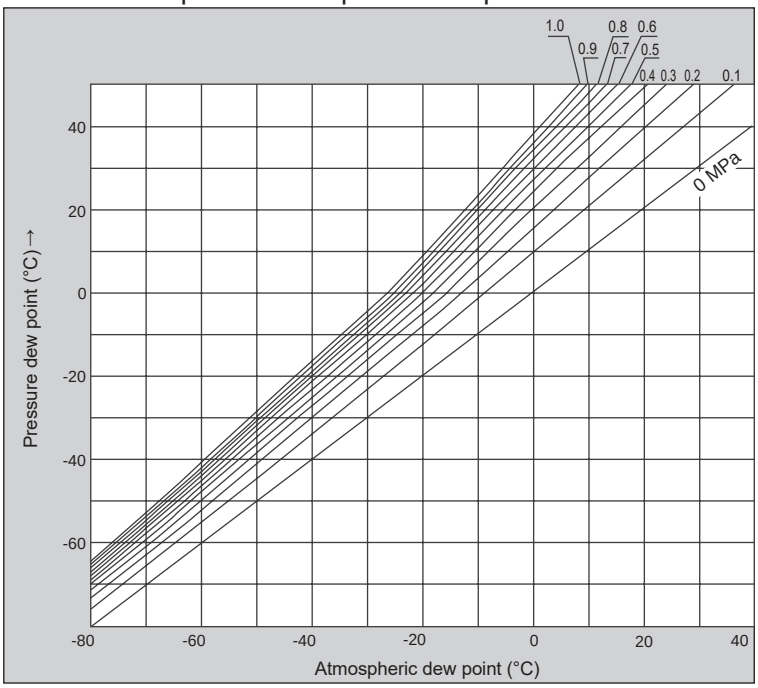

Selection guide of air dryer

The air dryers include refrigeration air dryers, desiccant dryers, and high polymer separation membrane dryers.
The types are selectable according to the required dew point, usage conditions, and applications.

Type of air dryer	Refrigerating	Desiccant Heatless
Atmospheric dew point performance (°C)	Down to -17	-20 to -72
Drying principle	Compressed air is cooled by a refrigerating machine to condense water vapor in the air and to remove it as drain water.	Water vapor in compressed air is adsorbed and removed by desiccant. Basic structure is the same as the heat type. Heat is not used to regenerate the desiccant. Some dried air is depressurized and expanded, and passed through humid desiccant to regenerate it.
Features	·Most common ·Both equipment and operating costs are reduced.	·Stable low dew point is obtained ·Equipment cost is less expensive than heat type ·Large air consumed to regenerate desiccant
Major applications	·General plants General pneumatic circuits and pneumatic components	·Ultra dry air required manufacturing line Semiconductor manufacturing facilities, liquid crystal panel manufacturing lines, foodstuffs, pharmaceutical plants, chemical plants, ozone generators, powder transfer
Appearance (Example)	 ·GT Series	 ·HD Series  ·SHD Series
Page	1753	1785

Desiccant Manual	High polymer membrane
-43, -72	-15 to -60
Water vapor in compressed air is adsorbed and removed by desiccant. Desiccant is not regenerated.	High polymer membrane easily penetrated by water vapor is used to separate moisture in compressed air and discharge it out of the membrane. In the basic structure, thousands of membranes in the form of thin hollow fibers are bundled.
·Disposable (Desiccant replacement is required each time) ·Power supply not required ·Low pressure use is also available	·High reliability ·Power supply not required ·Explosion-proof ·Purge air is required
·Ultra dry air required manufacturing line ·Medical equipment protection ·Analysis equipment protection	·Terminal in plant, integrated in device Instrument for analysis, inspection device, working machine
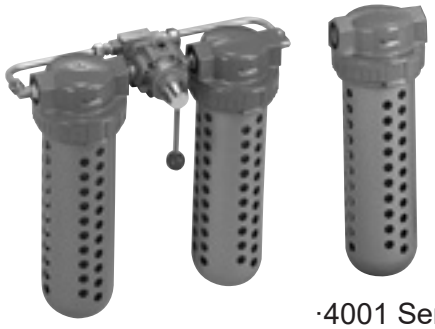 ·4001 Series ·4002 Series	 ·SD/SU Series  ·SDM Series
1785	1809

Refrigeration air dryer

■ **Refining and pressure adjusting components/main line units**

CONTENTS

Principle of refrigeration air dryer	1722
Features of CKD refrigeration air dryer	1723
Air cooling and water cooling	1724
Cooling water of water cooling air dryer	1725
Installation environment and air quality	1725
Series variation	1726
Periodic inspection content	1728
Recommended alternative model	1729
Xeroaqua dryer GX Series	1731
Xeroaqua dryer GT Series	1753

Principle of refrigeration air dryer

Air circuit

Warm humid compressed air is precooled by cold and dehumidified compressed air in the air balancer (A) (precooler). Precooled compressed air is led to the cooling chamber (B) (evaporator) and cooled to the pressured dew point of 10˚C by cold Freon gas vaporization heat. Water vapor in cooled compressed air condenses and changes into water drops (drain). Water drops are automatically discharged outside by the auto-drain (C).
The compressed air cooled in the cooling chamber (B) is led to the air balancer (A) (reheater) again, and is reheated by warm compressed air from the inlet.
This reheated compressed air becomes warm dry air and is discharged from the air outlet.

Refrigerant circuit

High temperature/high pressure Freon gas discharged from the refrigerating compressor (D) is led to the condenser (K). It is cooled by the cooling fan (E) using ambient temperature and condensed to warm high-pressure liquid. Warm/High pressure Freon liquid is led to the filter dryer (H) where dirt and water in the refrigerant are caught. Then it is compressed and expanded into specified low pressure/low temperature liquid by the automatic temperature expansion valve (G) (or capillary tube), and led to the cooling chamber (B) (evaporator). Low pressure/low temperature liquid (mist) in the cooling chamber is evaporated to gas by heat exchange with warm wet compressed air and is sucked into the refrigerating compressor.
The capacity regulating valve (F) bypasses refrigerant gas when thermal load in the cooling chamber is lowered, and returns the gas to the refrigerating compressor inlet. This suppresses the amount of refrigerant that flows into the cooling chamber, and prevents freezing from over-cooling.
When the refrigerating compressor suction pressure drops to the set pressure or lower, the valve opens automatically, and high humidity/high pressure gas is bypassed. Thus, the refrigerating compressor can be continually run even in a no-load state.
The fan control switch (J) is used to turn the cooling fan (E) ON/OFF and maintain high pressure (condensed pressure) at a constant range. This pressure switch activates when high pressure is detected.

(System diagram)

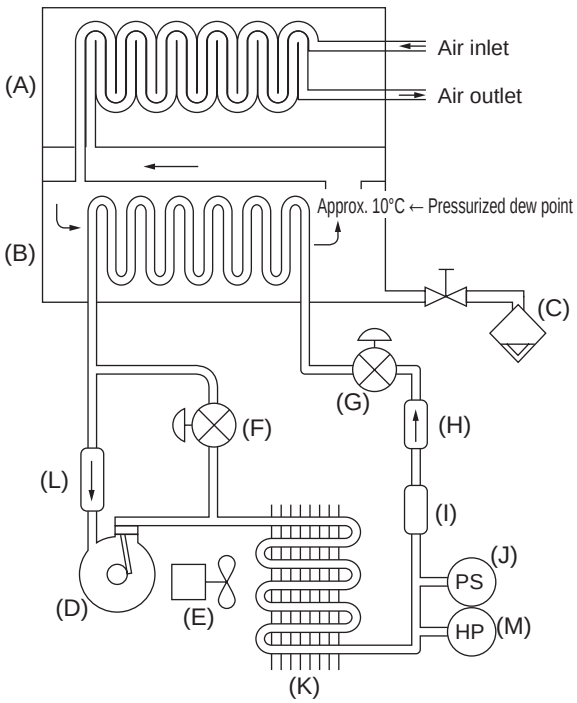

Function of service parts

No.	Name		Operation
(A)	Heat exchanger	Precooler/reheater	Exchanges heat between high temperature/high humidity compressed air and low temperature compressed air
(B)		Evaporator	Cools compressed air with liquid refrigerant evaporative latent heat and condenses water vapor to remove moisture
(C)	Auto-drain (drain discharger)		Automatically discharges drain
(D)	Refrigerating compressor		Compresses low pressure refrigerant vapor to turn it to high pressure refrigerant vapor
(E)	Cooling fan		Sends cold air to condenser
(F)	Capacity regulating valve		When air flow drops, flows high temperature refrigerant gas to prevent overcooling
(G)	Automatic expansion valve		Depressurizes high pressure liquid refrigerant to turn it to low pressure/low temperature liquid
(H)	Filter dryer		Filters out foreign matters from the refrigerant circuit (water, dirt)
(I)	Receiver		Collects refrigerant liquefied by the condenser, separates it into air and liquid, and feeds only liquid refrigerant to the automatic expansion valve
(J)	Fan control switch		The cooling fan operates when refrigerant pressure on the high pressure side rises to the specified pressure and stops when the pressure drops to the specified level. This controls refrigerant temperature.
(K)	Condenser		Cools high temperature/high pressure refrigerant vapor to turn it to high pressure liquid refrigerant
(L)	Accumulator		Separates liquid refrigerant from vapor so that liquid refrigerant is not sucked into the refrigerating compressor
(M)	High pressure switch		Stops refrigerating compressor operation when high pressure side refrigerant pressure rises to a specified pressure

Features of CKD refrigeration air dryer

1 Highly efficient

2 Environment-friendly new refrigerants R-134a, R-410A, and R-407C in various sizes (capacities) from compact to super large are adopted

3 Energy saving

① Energy-saving operation with 50% decreased power by limiting the number of refrigerating compressors (GT9300(W) to GT9450(W))

② Energy-saving operation with 60% decreased power through inverter control (GT9000WV2 Series)

4 Stainless steel is used as standard for compact to super large heat exchange vessel (container)

5 Dust filter is standard for air cooling condenser

Air cooling and water cooling

● Refrigeration air dryers are generally categorized into air cooling and water cooling.
Refer to the following explanation to select a model according to required applications and performance.

○ Refrigeration air dryers use evaporative latent heat of the refrigerant to cool compressed air, and condense and remove the moisture content.

○ In a set closed circuit, the refrigerant repeatedly changes: high temperature/high pressure gas → high temperature/high pressure liquid → low temperature/low pressure liquid → low temperature/low pressure gas → high temperature/high pressure gas.
When evaporating and changing from low temperature/low pressure liquid to low temperature/low pressure gas, the heat is drawn from the surroundings. It means that the compressed air loses heat and cools. This part is called the evaporator in the refrigerating cycle.

○ Conversely, the section to liquefy high temperature/high pressure gas is called the condenser. High temperature/high pressure gas discharged from the compressor must be changed to high temperature/high pressure liquid. So the refrigerant is forced-cooled.

○ For forced cooling, air-cooled and water-cooled are available.

Air cooling (compact to ultra large)

Air (outer air) is fed by a fan to cool refrigerant piping, to which fins are installed for improving conductivity. The air around the dryer is used for cooling, so efficiency is affected by air temperature. During summer, the place where the dryer is installed (compressor room) gets very hot, so this method is not effective for cooling. The fan runs continually, but is still insufficient for cooling. By contrast, the air temperature is low during winter, so the fan starts and stops to adjust the state to avoid overcooling.

Advantages: (1) Maintenance is easy.
The condenser's dust filter must be cleaned for clogging once every several months, but this only involves blowing with air and requires barely any expertise. (If the filter is heavily contaminated, it must be washed or replaced.)
(2) Only space required for taking in and exhausting air must be secured. There is no impact by other installation work.

Disadvantages: (1) The refrigerant's high pressure is adjusted by turning the fan ON/OFF, so it is hard to stabilize the high pressure side. It is also harder to stabilize the dew point compared to the water cooling method.
(2) Cooling performance is often insufficient in the summer, and the overload state occurs easily.
(3) A large amount of air is fed by the fan, so the noise level is high and dust is raised.
Heat exhaust (ventilation) may be required.

Water cooling (medium to ultra large)

The refrigerant pipe is cooled with water in this method. A plate or double pipe type condenser is often used. The cooling water rate is adjusted by the water regulating valve on the top of the cooling water pipe. The high pressure value of the refrigerant is detected, and valve opening is automatically adjusted by the pressure balance mechanical structure.

Advantages: (1) Cooling water is adjusted variably so high pressure stability is high, and it is easy to stabilize the dew point.
(2) A stable cooling effect is obtained in summer so the system does not fail easily. Stable dew point performance is achieved through the year.
(3) The installation environment is not affected. Dust is not raised. There is no fan noise. There is no heat by discharged wind, so the room temperature does not rise.

Disadvantages: (1) Accompanying work, such as water piping, is required.
(2) The condenser must be back-washed by qualified personnel once every 6 to 12 months.

⚠ Cooling water of a water cooling air dryer

Observe the following cautions for cooling water for the water-cooled condenser in the refrigerating compressor.
If the following water quality standards are not met, performance may be compromised, and the service life of the condenser could be reduced significantly.

1 The cooling water quality should be as per the "Guideline of Water Quality for Refrigeration and Air Conditioning Equipment" provided by the Japan Refrigeration and Air Conditioning Industry Association.

Japan Refrigeration and Air Conditioning Industry Association

Item	Chemical formula	Unit	Cooling water of CKD water cooling dryer Water quality standard	Japan Refrigeration and Air Conditioning Industry Association Guideline of Water Quality for Refrigeration and Air Conditioning Equipment Cooling system - Circulating type - Circulating water (JRA-GL-02-1994) Water quality standard
pH	—	pH(25℃)	6.5 to 8.2	6.5 to 8.2
Electrical conductivity	—		0.2 to 80 {2 to 800}	80 or less {800 or less}
Chloride ion	Cl-	mg/ℓ (ppm)	200 or less	200 or less
Sulfate ion	SO4–		100 or less	200 or less
Acid consumption (pH 4.8)	CaCO3	mg/ℓ (ppm)	100 or less	100 or less
Total hardness	CaCO3		200 or less	200 or less
Calcium hardness	CaCO3	mg/ℓ (ppm)	150 or less	150 or less
Ionized silica	SiO2		50 or less	50 or less
Iron	Fe	mg/ℓ (ppm)	0.5 or less	1.0 or less
Copper	Cu		0.3 or less	0.3 or less
Sulfide ion	S--	mg/ℓ (ppm)	Not detected	Not detected
Ammonium ion	NH_4+		1.0 or less	1.0 or less
Residue chlorine	Cl	mg/ℓ (ppm)	0.3 or less	0.3 or less
Free carbonic acid	CO2		4.0 or less	4.0 or less
Stability index	—		6.0 to 7.0	6.0 to 7.0
Matson rate	HCO3-/SO4--		1.0 or more	
Hydrogen carbonate ion	HCO3-	mg/ℓ (ppm)	-	
Oxygen rate			0.1 or less	
Aluminum	Al	mg/ℓ (ppm)	0.2 or less	
Manganese	Mn		0.1 or less	
Nitric acid ion	NO3-	mg/ℓ (ppm)	100 or less	
Sodium ion	Na+		20 or less	
	PO4---	mg/ℓ (ppm)	2.0 or less	
	NH3		0.5 or less	
	Mn++	mg/ℓ (ppm)	10 or less	
	H2S		0.05 or less	
Evaporation residue		mg/ℓ (ppm)	50 or less	
Turbidity			2 degrees or less	

- Cooling water containing many elements that could accumulate or precipitate in the condenser/cooling water piping, or containing many corrosive elements must not be used.
- Soften hard water before use.

2 Install a 20 mesh strainer on the cooling water inlet.

3 Wash the condenser on a periodic basis.

⚠ Installation environment and air quality

Refrigeration air dryers use copper pipes (phosphorus deoxidized copper pipes) for the refrigerant gas pipes and pipes within the heat exchanger. When corrosion causes a hole in these copper pipes, the refrigerant gas will leak and make it impossible to operate the unit, or cause failure such as water leaking from the compressed air outlet side of the air dryer. In addition, copper is also used as conductive materials for the electrical wiring, etc. Corrosion thereof may cause failures which may lead to safety problems such as electrical leakage accidents.
Especially in the copper piping in the heat exchanger, dew formation and desiccation are repeated. If corrosive elements are present, they may condense on the surface of the copper piping and accelerate corrosion. Under such conditions, take special care with the air dryer installation environment and the air taken in by the air compressor. Failures caused by corrosion are not covered by the warranty.
Plant exhaust may contain corrosion-promoting elements such as NOx (nitrogen oxides), SOx (sulfur oxides), and CO_2 (carbon dioxide). Select the air dryer and air compressor installation position with care so that they are not affected by plant exhaust. In rare cases, if chlorine-based organic solvents (trichloroethylene, etc.), aldehyde or alcohol (formaldehyde generated from building materials or methanol in the chemicals used) are absorbed by the air dryer and hydrolyzed, the copper piping could corrode (like an ant nest). Caution is required in these cases.

Series variation

Refrigeration air dryer

	General purpose		
Series	GX3200D	GX5200D	
Applications of installation	Terminal installation in plant, device integrated		
Features / Main specifications / Applications	General	Air cooling compressor For direct connection	
Application Air compressor kW	• Ambient temperature: max. 45°C • Inlet air temperature 35°C (40°C for GX3255D)	• Ambient temperature Max45°C (48°C for GX5255D and GX5275D) • Inlet air temperature 55°C	
0.75	●	●	
1.5	●	●	
2.2	●	●	
3.7	●	●	
5.5	●	●	
7.5	●	●	
11	●	●	
15	●	●	
22	●	●	
37	●	●	
55	●	●	
75		●	
90			
120			
150			
190			
240			
300			
380			
450			
710			
960			
Digital dew point monitor	x	x	
Medium pressure	x	x	
CE	x	x	
New refrigerant (R-134a, R-410A, R-407C)	● Standard compliance	● Standard compliance	
Stainless steel heat exchanger	● Standard equipment	● Standard equipment	
Drain forcible discharge method	x	x	
Different voltage compatible (transformer integrated)	Contact CKD Option for GX5255D and 5275D		
Paint color specification	x	x	
Copper tube rust proof coating	● Option	● Option	
Bypass piping set	● Accessory	● Accessory	
Remote control	● Option (standard for GX3215D, 3222D, 3237D, and 3255D)	● Option (standard for GX5211D, 5215D, 5222D, 5237D, 5255D, and 5275D)	
External signal	● Option	● Option (standard for GX5255D and GX5275D)	
Outdoors	x	x (GX5255D, GX5275DOContact CKD for details.)	
Instantaneous power failure	● Standard compliance (GX3215D and higher)	● Standard compliance (GX5211D and higher)	
Dust filter for condenser	● Standard equipment	● Standard equipment	
Anchor bolt	● Accessory	● Accessory	
Companion flange	-	-	
Stainless steel nameplate	● Option	● Option	
English language specifications	● Standard equipment	● Standard equipment	
Product photo	Contact CKD for details.		
Page	1738	1742	

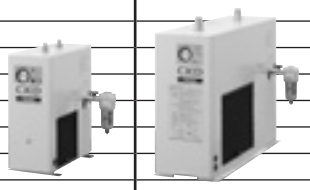

This list is for selection guide. Refer to the appropriate page for selection, and select a model after checking installation conditions.

	GT9000(D)	GT9000W(D)	GT9000WV2
	Compressor direct connection		
	Air cooling air compressor directly connected	Water cooling air compressor directly connected	Water cooling air compressor directly connected
	• Ambient temperature: max. 40°C (48°C for GT9075D, 9090D, 9120D, 9100D, and 9190D) • Inlet air temperature 40°C	• Inlet air temperature 40°C	• Inlet air temperature 40°C
			
	●	●	
	●	●	
	●	●	
	●	●	
	●	●	
	●	●	
	●	●	
	●	●	
	●	●	
			●
			●
	● Standard (GT9300 and higher)	● Standard (GT9300W and higher)	● Standard equipment
	x	x	x
	x	x	x
	● Standard compliance	● Standard compliance	● Standard compliance
	● Standard equipment	● Standard equipment	● Standard equipment
	x	x	● Standard equipment
	● Option	● Option	● Option
	Contact CKD for details.		
	● Option	● Option	● Option
	x	x	x
	● Standard equipment	● Standard equipment	● Standard equipment
	● Standard equipment	● Standard equipment	● Standard equipment
	Contact CKD for details.		
	● Standard compliance (excluding GT9240)	● Standard compliance (excluding GT9240W)	● Standard compliance
	● Standard equipment	-	-
	● Accessory	● Accessory	● Accessory
	● Accessory (GT9120D and higher)	● Accessory (GT9120WD and higher)	● Accessory
	● Option	● Option	● Option
	● Standard equipment	● Standard equipment	● Standard equipment
	Contact CKD for details.		
	1760	1768	1776

Periodic inspection content

Conduct the following inspections periodically for a long, reliable service life.

Inspection content	Inspection term				Inspection point	Inspection method	Judgment reference
	Daily	Every week	Every month	Per 6 months			
Operation confirmation	○				Operation lamp	Visual inspection	· This should light at operation
	○				Operation sound of refrigerating compressor	Listening to the sound	· No abnormal noise
	○				Fan rotation	Visual inspection Listening to the sound	· No abnormal noise and smooth rotation · ON and OFF operation or turned ON
Dew point (cooling) temperature	○				Refrigerant pressure gauge	Visual inspection	· It should be in the green zone
Inlet air pressure		○			Air pressure gauge	Visual inspection	· It should be within product specifications (should be specification pressure)
Drain discharge	○	Cleaning			Drain trap	Visual inspection	· Drainage should be discharged · Air should not be left blowing
Ambient temperature	○				Near condenser inlet	Measuring with thermometer	· It should be within specifications
Condenser clogging			○	Cleaning	Air cooling Condenser fin section	Visual inspection	· Foreign matter or dust should not be accumulated. · Condenser inlet section should not be plugged. · Condenser inlet section should not be exposed to hot air.
					Water cooling Refrigerant high pressure gauge		· It should be 1.95 MPa or lower. (Cleaning is required for 2.15 MPa and over)
Power supply voltage			○		Supply power	Measuring with a tester	· Rated voltage of specifications within ±10%
Operating current			○		Supply power	Measuring with a tester	· Rated voltage of specifications within ±20%

Guide to recommended replacements for refrigeration air dryer

As of May 2015

Production and sales of the "Old products" listed below have been discontinued.
Select alternative models from "Current products".

Note: The comparison table given below shall be used only as a guide. When making an actual selection, the current working air pressure, inlet air temperature, ambient temperature, required dew point, etc., must be taken into consideration to ensure sufficient performance.

(1) Air cooling (standard inlet air temperature)

Old product Group A	Old product Group B	Old product Group C	Old product Group D	Old product Group E	Current product
	RD(A)1003(A) RDA-3(E)	GK3103	GK3103D	GX3203D	**GX3203D**
	RD(M)1004(A) RD(M)1006(A) RDA-6(E)	GK3106	GK3106D	GX3206D	**GX3206D**
4304-25PD	RDA-12(E) RD(M)1008(A)	GX3108	GK3108D	GX3208D	**GX3208D**
4304-35PD	RDA-12(E) RD(M)1011(A)	GX3111	GK3111D	GX3211D	**GX3211D**
	RD-15D(E) RD(M)1015(A) GX3015	GX3115	GX3215	GX3215D	**GX3215D**
4308-50PD 4308-75PD	RD-22D GX3022	GX3122	GX3222	GX3222D	**GX3222D**
4308-100PD 4308-125PD 4310-150PD	RD-37D GX3037	GX3137	GX3237	GX3237D	**GX3237D**
4316-250PD	RD-55D	GT7055	GX3255	GX3255D	**GX3255D**
4316-375PD	RD-75D	GT7075		GT9075	**GT9075D**
		GT7095		GT9090	**GT9090D**
4332-575PD	RD-120D	GT7120		GT9120	**GT9120D**
4332-700PD	RD-150D	GT7150(D)		GT9150	**GT9150D**
4332-1000PD	RD-190D	GT7200(D)		GT9190	**GT9190D**
4332-1200PD	RD-240D	GT7250(D)		GT9240	**GT9240**
4332-1500PD	RD-300D(E,F)	GT7300(D)		GT9300	**GT9300**
4332-1750PD	RD-360D(E,F)	GT7400(D)		GT9380	**GT9380**
	RD-450D(E,F)	GT7480(D)		GT9450	**GT9450**

(2) Air cooling (high temperature inlet air temperature)

Old product Group A	Old product Group B	Old product Group D	Old product Group E	Current product
RD(M)2001(A) RD(M)2002(A) RD(M)2003(A) GX5003	GX5103	GK5103	GX5203D	**GX5203D**
RD-3.7(E)-AC RD(M)2004(A) GX5004	GX5104	GK5104	GX5204D	**GX5204D**
RD-5.5(E)-AC RD(M)2006(A) GX5006	GX5106	GK5106	GX5206D	**GX5206D**
RD-7.5(E)-AC RD(M)2008(A) GX5008	GX5108	GX5208	GX5208D	**GX5208D**
RD-11(E)-AC RD(M)2011(A) GX5011	GX5111	GX5211	GX5211D	**GX5211D**
RD-15(E)-AC RD(M)2015(A) GX5015	GX5115	GX5215	GX5215D	**GX5215D**
RD-22D-AC GX5022	GX5122	GX5222	GX5222D	**GX5222D**
RD-37D-AC GX5037	GX5137	GX5237	GX5237D	**GX5237D**
RD-55D-AC	GT5055	GX5255	GX5255	**GX5255D**
RD-75D-AC	GT5075D	GX5275	GX5275	**GX5275D**

(3) Water cooling

Old product Group A	Old product Group B	Old product Group C	Old product Group D	Current product
4310-150PDW	RDW-37D	GT7055W	GT9075W	**GT9075WD**
4316-250PDW	RDW-55D	GT7055W	GT9075W	**GT9075WD**
4324-375PDW	RDW-75D	GT7075W	GT9075W	**GT9075WD**
		GT7095W	GT9090W	**GT9090WD**
4332-575PDW	RDW-120D	GT7120W(D)	GT9120W	**GT9120WD**
4332-700PDW	RDW-150D	GT7150W(D)	GT9150W	**GT9150WD**
4332-1000PDW	RDW-190D	GT7200W(D)	GT9190W	**GT9190WD**
4332-1200PDW	RDW-240D	GT7250W(D)	GT9240W	**GT9240W**
4332-1500PDW	RDW-300D(F)	GT7300W(D)	GT9300W	**GT9300W**
4332-1750PDW	RDW-360D(F)	GT7400W(D)	GT9380W	**GT9380W**
	RDW-450D(F)	GT7480W(D)	GT9450W	**GT9450W**
	RDW-680D(F)	GT7710W(D)	GT9710WV	**GT9710WV2**
	RDW-900D(F)	GT7960W(D)	GT9960WV	**GT9960WV2**

Xeroaqua dryer

GX

■ Refining and pressure adjusting components/main line unit/refrigeration air dryer

Overview

Compact refrigeration dryer with outstanding environmental properties, reliability and safety.

Features

Environment-friendly new refrigerant R-134a and R-410A incorporated

New ozone-safe refrigerant is used.

(2) SUS heat exchanger

Oil-free stainless steel heat exchanger is used for all models.

(3) Energy saving

The compact design reduces power consumption. A low air loss drain discharger has also been adopted.

(4)Thin and compact body

(5) Easy maintenance

The safe design allows the operation state to be confirmed at a glance. Easily service the unit even while it is running.



CONTENTS

Product introduction	1732
System selection guide	1736
● For assembling device, standard inlet air (35°C) (GX3200D)	1738
● For direct compressor connection, high temperature inlet air (55°C) (GX5200D)	1742
⚠Safety precautions	1749

High quality and high reliability guaranteed

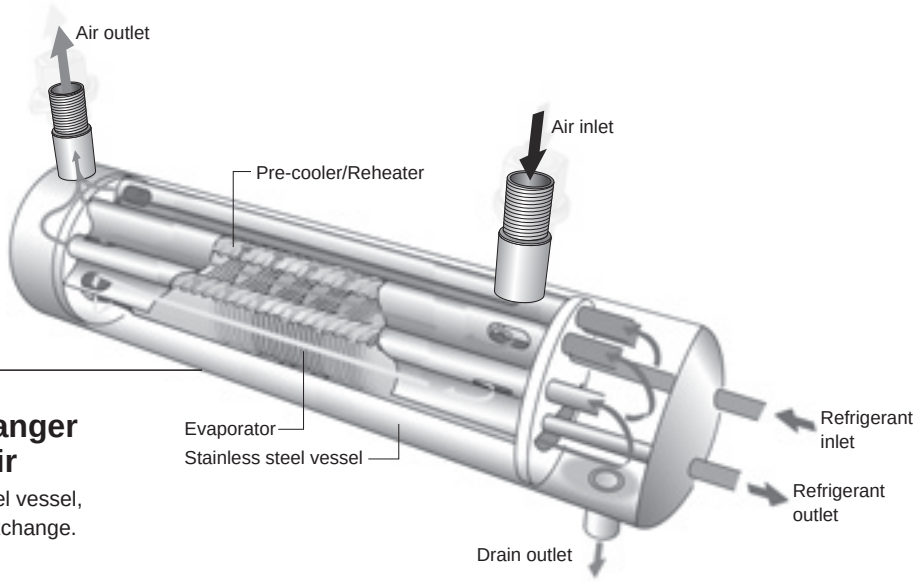

Stainless steel heat exchanger compatible with oil-free air

The heat exchanger uses a stainless steel vessel, preventing dust generated due to heat exchange.

High weather resistance

The refrigerant pipes (copper pipes) within the heat exchanger are nickel plated for improved corrosion resistance.

Increased capacity for high-temperature environment support

Operable even at an ambient temperature of 45°C.
(40°C for GX5255 and 5275)

High reliability, energy saving/space saving.

Refrigeration air dryer

Xeroaqua dryer GX Series

Standard air inlet **GX3200D** Series/up to 55 kW

High-temperature inlet air **GX5200D** Series/up to 37 kW

The Xeroaqua dryer GX Series has been reinvented with even higher reliability and support for high-temperature environments, etc.

Slim profile

Thin and compact body

Can be installed anywhere, whether in a line or mounted on equipment.



Energy saving

Low air loss drain discharger adopted

No wasteful air loss, as the use of a float enables discharge every time drain is generated with the dryer.

Achieves low power consumption

Energy saving up to 15% of power. (Compared to CKD GX3237D)

Environment-friendly refrigerant

Environment-friendly new refrigerants R-134a and R-410A used

Ozone safe.

Easy maintenance



GX3215D to 3255D,
GX5211D to 5237D

Inspection via control panel

Regular inspection can be performed by simply looking at the control panel.
The refrigerant pressure gauge and operation lamp make operating status visible at a glance.

Easy error diagnostics

(GX3215D to 3255D, GX5211D to 5237D) The causes of error-induced stoppages can be identified through the blinking pattern of the alarm LED.



Dust filter installed as standard

Reduces the hassle of condenser cleaning. Attachment and removal are extremely easy.

External drain discharger

Easily service the unit even while it is running.

Centralized control possible

Remote operation and operation/alarm signals (options) are also available.

Bypass piping set also available as an accessory

(optional)

Supports ambient temperatures up to 45°C

With error diagnostic function

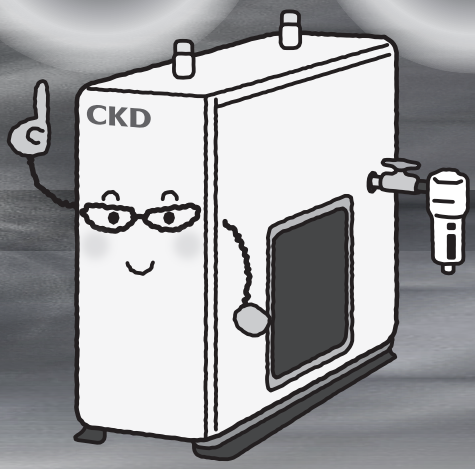



[Series variation]

Series	Applications	Rated conditions				Applicable air compressor (kW)									
		Pressure dew point (°C)	Inlet air pressure (MPa)	Ambient temperature (°C)	Inlet air temperature (°C)	to 2.2	3.7	5.5	7.5	11	15	22	37	55	75
Standard inlet air GX3200D	For equipment embedding	10	0.7	32	35 (GX3203D to GX3237D)	●	●		●	●	●	●	●	●	*1
					40 (GX3255D)										
High-temperature inlet air GX5200D	Air compressor directly connected	10	0.7	32	55	●	●	●	●	●	●	●	●	●	●

*1 is with GT9000 Series.

Simple, reliable, space saving

Further increased reliability and ease of use.
The Xeroaqua dryer GX Series has been reborn in response to the changing needs of our customers.

Operable at ambient temperature of **48°C**
High-temperature environments supported

Installation area reduced by up to **30%**
Space saving supported

Processing air rate increased by up to **10%**
Increased facility efficiency supported

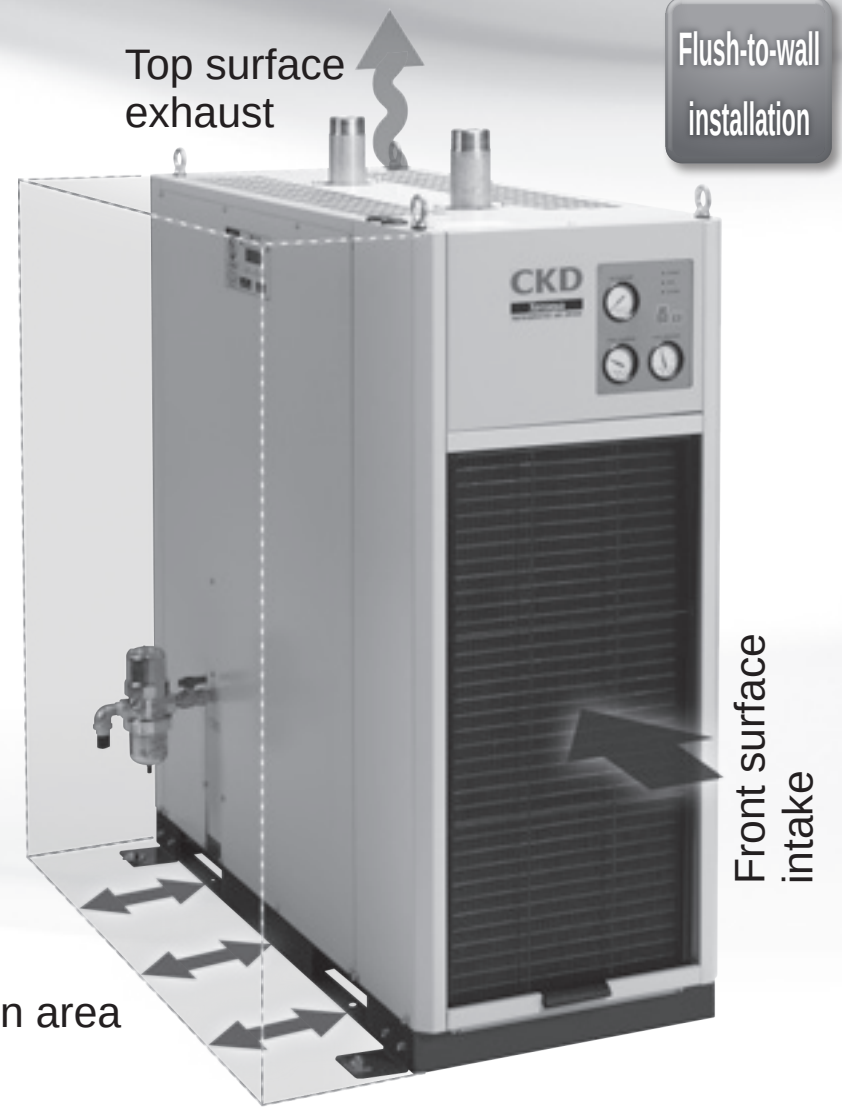

Refrigerated air dryer Xeroaqua

GX5255D (55 kW)
GX5275D (75 kW)

High quality, high reliability

Keeps working even at high temperatures

Operation won't stop even in summer. (Max. ambient temperature 48°C)

Heat exchanger with excellent climate resistance

The use of a stainless steel vessel prevents dust generation from the heat exchanger.
The refrigerant pipes within the heat exchanger are nickel plated for improved corrosion resistance.

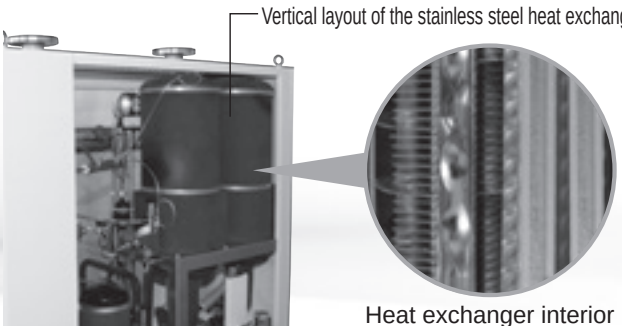

Heat exchanger interior

Easy maintenance

Inspection via control panel

Regular inspection can be performed by simply looking at the control panel. The refrigerant pressure gauge and operation lamp make operating status visible at a glance.

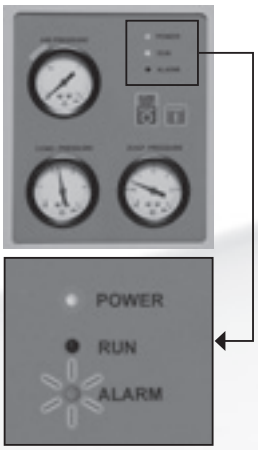

Easy error diagnostics

The causes of error-induced stoppages can be identified through the blinking pattern of the ALARM LED.

When ON	Refrigerant circuit pressure error
When blinking 2 times	Refrigerant circuit temperature error
When blinking 3 times	Current error

Dust filter installed as standard

Reduces the hassle of condenser cleaning. Attachment and removal are extremely easy.



Centralized control possible

Remote control, operating and alarm signal interface equipped as standard.

Space saving

Space saving realized with top surface exhaust

Top surface exhaust allows the unit to be mounted flush against a wall.

Flush-mounting and freely installable

Select drain trap left or right mounting: depending on the environment, installation is possible flush with the rear and either left or right walls.

* Right takeout drain trap is an option.

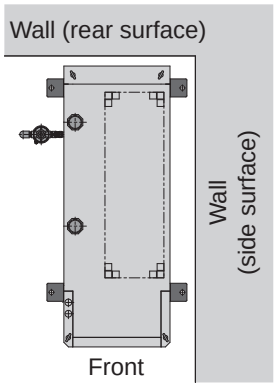

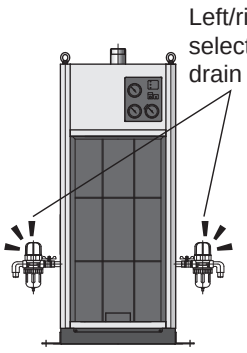

* Note that right side mounting requires optional accessories.

Example of system selection list

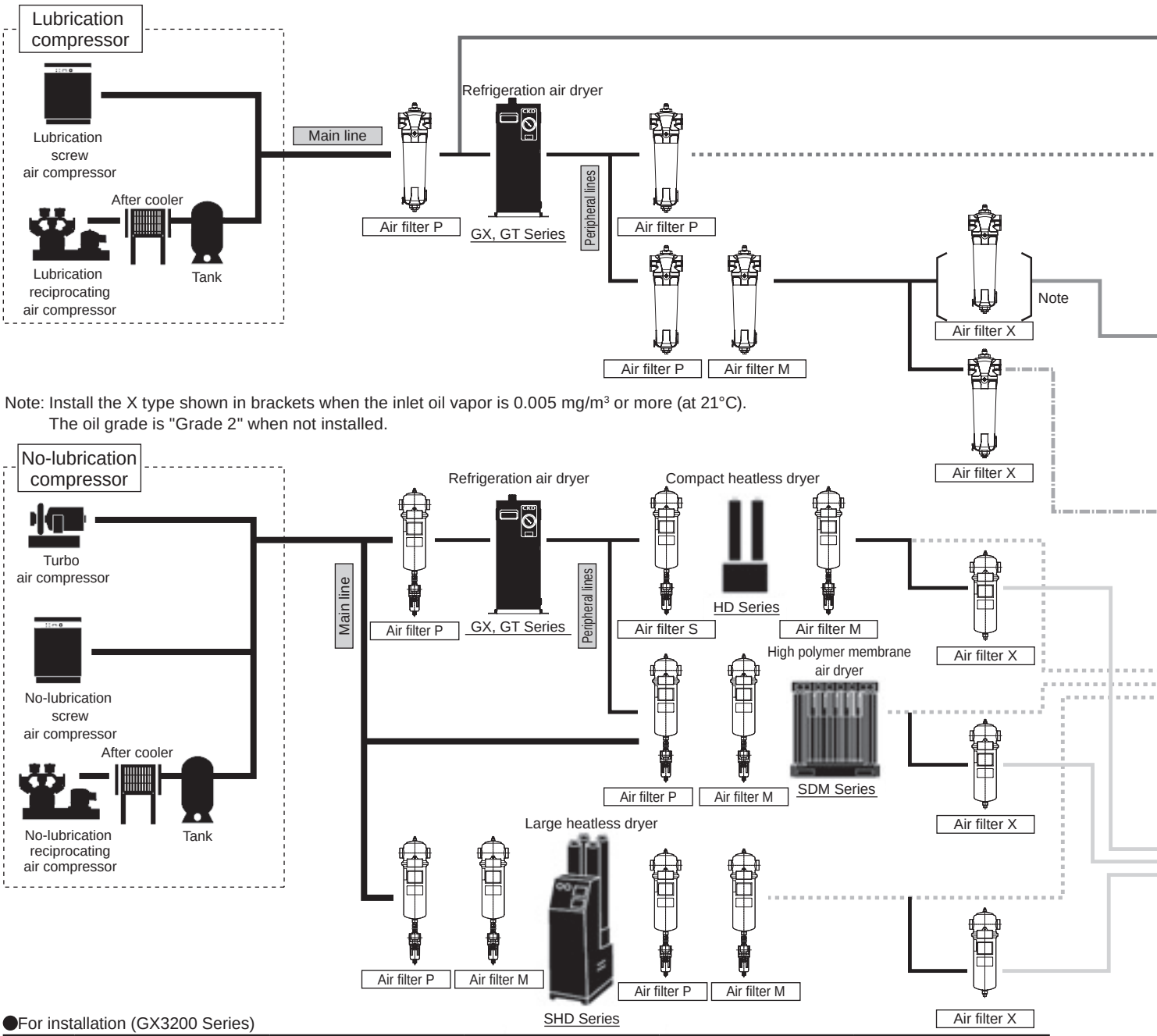

Note: Install the X type shown in brackets when the inlet oil vapor is 0.005 mg/m³ or more (at 21°C).
The oil grade is "Grade 2" when not installed.

●For installation (GX3200 Series)

Air compressor		Refrigeration air dryer	Main line filter P type (1 µm)	Main line filter M type (0.01 µm)	Main line filter X type (deodorizing)
Output kW	Reference processing air rate m³/min (ANR)				
Up to 2.2	0.30/0.35	GX3203D-AC100/200V	F3000-10-W-F1	M3000-10-W-F1	M3000-10-W-X
3.7	0.44/0.50	GX3206D-AC100/200V	F4000-15-W-F1	M4000-15-W-F1	M4000-15-W-X
5.5	0.64/0.72		F4000-15-W-F1	M4000-15-W-F1	M4000-15-W-X
7.5	0.94/1.13	GX3208D-AC100/200V	F6000-20-W-F1	M6000-20-W-F1	M6000-20-W-X
11	1.65/1.82	GX3211D-AC100/200V	F8000-20-W-F1	M8000-20-W-F1	M8000-20-W-X
15	2.40/2.80	GX3215D-AC200V	AF2-05P25A	AF2-05M25A	AF2-05X25A
22	3.70/4.20	GX3222D-AC200V	AF2-08P32A	AF2-08M32A	AF2-08X32A
37	5.70/6.10	GX3237D-AC200V	AF2-08P32A	AF2-08M32A	AF2-08X32A
55	8.40/9.80	GX3255D-AC200V	AF2-13P50A	AF2-13M50A	AF2-13X50A

●For direct compressor connection (GX5200 Series)

Air compressor		Refrigeration air dryer	Main line filter P type (1 µm)	Main line filter M type (0.01 µm)	Main line filter X type (deodorizing)
Output kW	Reference processing air rate m³/min (ANR)				
Up to 2.2	0.30/0.35	GX5203D-AC100/200V	F3000-10-W-F1	M3000-10-W-F1	M3000-10-W-X
3.7	0.44/0.50	GX5204D-AC100/200V	F4000-15-W-F1	M4000-15-W-F1	M4000-15-W-X
5.5	0.64/0.72	GX5206D-AC100/200V	F4000-15-W-F1	M4000-15-W-F1	M4000-15-W-X
7.5	1.22/1.32	GX5208D-AC200V	F8000-20-W-F1	M8000-20-W-F1	M8000-20-W-X
11	1.65/1.82	GX5211D-AC200V	F8000-25-W-F1	M8000-25-W-F1	M8000-25-W-X
15	2.10/2.40	GX5215D-AC200V	AF2-05P25A	AF2-05M25A	AF2-05X25A
22	3.70/4.20	GX5222D-AC200V	AF2-08P32A	AF2-08M32A	AF2-08X32A
37	5.70/6.10	GX5237D-AC200V	AF2-08P32A	AF2-08M32A	AF2-08X32A
55	8.60/9.90	GX5255D-AC200V	AF2-13P50A	AF2-13M-50A	AF2-13X50A
75	11.40/12.60	GX5275D-AC200V	AF2-13P50A	AF2-13M-50A	AF2-13X50A

*1: Use anti-rust processed materials for piping (zinc plated pipe, lined pipe, stainless steel pipe). If there is a high possibility that rust or flakes are generated in the pipe due to the piping material, install an air filter in front of the dryer.

Air quality	Applications	Grade
Water drip removal air/ coarse dust removal air	For construction/civil engineering machinery Air for cleaning (dry air not required)	2.-.-
General dry air	Standard pneumatic components Standard pneumatic tools Labor saving components Jigs and tools for air Air chucks Air vices Air for cleaning precision components	2.6.3
		2.5.3
Dry air (oil-free)	For instrumentation For measurement Sequence control High-grade paint	1.6.1
		1.5.1
Dry air (odorless)	Food product industry (where air is not directly blown onto food) Pharmaceutical industry For stirring/transporting/drying/packaging/brewing	1.6.1
		1.5.1
Ultra dry air (oil-free)	Ozone generator Powder transfer Drying of atmospheric gas for furnaces Drying of high-voltage generator insulation gas Drying of computer rooms For centralized control instruments	1.3.1
		1.2.1
		1.2.1
Ultra dry air (odorless)	Food product industry (where air is not directly blown onto food) Pharmaceutical industry For stirring/transporting/drying/packaging/brewing	1.3.1
		1.2.1
		1.2.1

JIS B 8392-1:2012 Compressed air purity grade

Grade	Solid particles				Humidity and moisture		Oil
	Max. number of particles per 1 m^3 for particle diameter d (μm)			Mass conc. Cp	Pressure dew point	Water conc. Cw	Total oil conc.
	0.1 < d ≤ 0.5	0.5 < d ≤ 1.0	1.0 < d ≤ 5.0	mg/m^3	°C	g/m^3	mg/m^3
0	Conditions higher than Grade 1 will be agreed upon between user and supplier.						
1	≤ 20,000	≤ 400	≤ 10	-	≤ -70	-	≤ 0.01
2	≤ 400,000	≤ 6,000	≤ 100	-	≤ -40	-	≤ 0.1
3	-	≤ 90,000	≤ 1,000	-	≤ -20	-	≤ 1
4	-	-	≤ 10,000	-	≤ +3	-	≤ 5
5	-	-	≤ 100,000	-	≤ +7	-	-
6	-	-	-	0 < Cp ≤ 5	≤ +10	-	-
7	-	-	-	5 < Cp ≤ 10	-	Cw ≤ 0.5	-
8	-	-	-	-	-	0.5 < Cw ≤ 5	-
9	-	-	-	-	-	5 < Cw ≤ 10	-
X	-	-	-	Cp>10	-	Cw>10	>5

JIS B 8392-1:2003 has been revised to JIS B 8392-1:2012.

For example,
What is Grade 1:2:1?

- Solid particles 0.1 to 0.5 μm are 20,000 particles or less, 0.5 to 1.0 μm are 400 particles or less, and 1.0 to 5.0 μm are 10 particles or less
- Pressure dew point -40°C or less
- Oil concentration 0.01 mg/m^3 or less.



Refrigeration air dryer Xeroaqua Air cooling

GX3200D Series

Standard inlet air

Compatible air compressors: for 2.2, 3.7, 5.5, 7.5, 11, 15, 22, 37, 55 kW

JIS symbol



Specifications

1 MPa ≈ 145.0 psi, 1 MPa = 10 bar

Model No.		GX3203D	GX3206D	GX3208D	GX3211D	GX3215D	GX3222D	GX3237D	GX3255D
Applicable air compressor kW		to 2.2	3.7, 5.5	7.5	11	15	22	37	55
Working range	Working fluid	Compressed air							
	Inlet air temperature °C	5 (41°F) to 50 (122°F)							
	Inlet air pressure MPa	0.15 to 1.0	0.1 (≈15 psi, 1 bar) to 1.0 (≈150 psi, 10 bar)						
	Ambient temperature °C	2 (35.6°F) to 45 (113°F) (*2)				2 (35.6°F) to 45 (113°F)			
Rating	Processing air rate m^3/min (ANR) 50/60 Hz (*3)	0.30/0.35	0.64/0.72	0.94/1.13	1.65/1.82	2.40/2.80	3.70/4.20	5.70/6.10	8.40/9.80
	Processing air rate (compress suction state) m^3/min 50/60 Hz (*4)	0.31/0.37	0.67/0.76	0.99/1.19	1.73/1.91	2.52/2.94	3.88/4.41	5.98/6.40	8.81/10.3
	Inlet air temperature °C	35 (95°F)							40 (104°F)
	Inlet air pressure MPa	0.7 (≈100 psi, 7 bar)							
	Ambient temperature °C	32 (89.6°F)							
Perfm.	Outlet air pressure dew point °C (*5)	10 (50°F)							
	Pressure drop MPa 50/60Hz (*6)	0.002/0.003	0.009/0.011	0.009/0.013	0.011/0.013	0.012/0.017	0.024/0.031	0.023/0.026	0.018/0.025
Power supply		Single-phase 100/100, 110 VAC 50/60 Hz Single-phase 200, 220/200, 220 VAC 50/60 Hz				Three-phase 200/200, 220 VAC 50/60 Hz			
Electrical specifications (*7)	Power consumption (at 100, 110 V) kW 50/60 Hz	0.17/0.19,0.20	0.26/0.27,0.30	0.32/0.34,0.41	0.52/0.52,0.55	-	-	-	-
	Power consumption (at 200, 220 V) kW 50/60 Hz	0.16, 0.17/0.19, 0.21	0.24, 0.28/0.26, 0.29	0.29, 0.35/0.32, 0.34	0.44, 0.49/0.52, 0.53	0.61/0.71,0.73	0.65/0.79,0.79	1.16/1.41,1.41	1.30/1.63,1.60
	Current consumption (at 100, 110 V) A 50/60 Hz	1.9/1.9, 1.8	3.2/2.8, 2.8	3.9/3.4, 3.7	6.5/5.2, 5.0	-	-	-	-
	Current consumption (at 200, 220 V) A 50/60 Hz	0.8, 0.8/1.0, 1.0	1.4, 1.6/1.3, 1.3	1.7, 2.1/1.6, 1.6	2.6, 2.9/2.6, 2.4	2.6/2.5, 2.5	3.0/2.8, 2.9	4.5/4.6, 4.4	5.3/5.7, 5.4
	Starting current (at 100 V) A 50/60 Hz	7.1/7.9	11.1/12.1	16.4/17.3	26.5/24.8	-	-	-	-
	Starting current (at 200 V) A 50/60 Hz	3.0/3.3	6.3/6.2	7.7/7.3	13.2/12.4	22.5/25.0	27.5/31.5	31.5/40.6	41.3/43.8
Refrigerant		R-134a			R-410A				
Air inlet and outlet port size		R 1/2	R 1/2	R 3/4	R 3/4	R1	R1	R1 1/2	R2
Weight kg		18	21	26	33	39	42	68	84
Released heat kW 50/60Hz (*7)		0.29/0.32	0.57/0.65	0.72/0.81	1.2/1.3	1.6/1.8	2.3/2.5	3.0/3.3	4.8/5.6

*1: Outer panel: Quality cool white (Munsell No. 5GY7.5/0.5)
*2: When the power supply voltage is ±5%. 2 to 40°C for power supply voltage ±10%.
*3: ANR shows conditions of 20°C atmospheric pressure and relative humidity 65%.
*4: Value converted into air compressor intake state at 32°C atmospheric pressure and relative humidity 75%.
*5: Contact CKD for information on the dew point performance guarantee.
*6: The pressure drop value is a typical value and is not a guaranteed value.
*7: The power consumption, current consumption, and exhaust heat are all reference values under the rated conditions and are not guaranteed values.

How to order

GX32 [03D] - [M] - [AC200V]

- [03D] Ⓐ Capacity category
- [M] Ⓑ Option *1
- [AC200V] Ⓒ Voltage

Code	Description
Ⓐ Capacity category	
03D	to 2.2 kW
06D	3.7, 5.5 kW
08D	7.5 kW
11D	11 kW
15D	15 kW
22D	22 kW
37D	37 kW
55D	55 kW

Ⓑ Option	
Blank	Standard products
H2	SUS nameplate
H3	Simple export packaging *3
M	Operation/fault signal output *2 (GX3215D, 3222D, 3237D, 3255D only)
M3	Remote control & operation/fault signal output (GX3203D, 3206D, 3208D, 3211D only) *2
N1	Copper tube rust proof coating

Ⓒ Voltage
100 VAC (GX3203D, GX3206D, GX3208D, GX3211D only)
200 VAC

Precautions for model No. selection

*1: Indicate options in alphabetical order.
*2: The equipment of remote control and operation/error signals are as listed in the table below.

Model No.	Terminal for remote control	Operation/error signal
GX3203D,3206D 3208D,3211D	Option M3 (Momentary)	Option M3
GX3215D,3222D 3237D,3255D	Standard equipment (Alternate)	Option M

*3: Option H3 is packaged in plywood.
*4: The instruction manual and nameplates are provided in Japanese and English.
*5: Contact CKD if a photo of the completed product is required.
*6: Contact CKD to designate the color of the body panel.

Selection guide

When determining the appropriate model from the max. processing air rate of each model No.
Standard processing air rate × (1) Pressure dew point coefficient × (2) Inlet air temperature coefficient × (3) Ambient temperature coefficient × (4) Inlet air pressure coefficient = Max. processing air rate
Note: Select with conditions where the value of the product of each coefficient ((1)×(2)×(3)×(4)) does not exceed the upper limit coefficient of (5).

Conditions	Working conditions	Selecting conditions	Coefficient
Pressure dew point	Below 17°C	15°C	(1) 1.15
Inlet air temperature	20 to 23°C	25°C	(2) 1.25
Ambient temperature	20 to 23°C	25°C	(3) 1.08
Inlet air pressure	0.35 to 0.45 MPa	0.3 MPa	(4) 0.75
Frequency	50 Hz	50 Hz	50 Hz

Substitute the above conditions into the equation above to obtain the processing air rate when using the GX3215.
Product of each coefficient
(1) × (2) × (3) × (4) = 1.15 × 1.25 × 1.08 × 0.75 = 1.16
The (5) ceiling coefficient of 0.97 at the inlet air pressure 0.3 MPa (use conditions) is exceeded. Therefore, the max. processing air rate is the following, using the ceiling coefficient 0.97.
2.40 (reference processing air rate) x 0.97 = 2.32 m^3/min (ANR).
If the used flow rate is less than or equal to this value, select that model.

① Pressure dew point coefficient

Pressure dew point	Coefficient
15°C	1.15
10°C	1.00
7°C	0.72
5°C	0.58

② Inlet air temperature coefficient

Inlet air temperature	Coefficient		
	GX3203D GX3206D GX3208D	GX3211D GX3215D GX3222D GX3237D	GX3255D
25°C	1.25	1.25	1.30
30°C	1.13	1.13	1.23
35°C	1.00	1.00	1.12
40°C	0.80	0.80	1.00
45°C	0.65	0.65	0.80
50°C	0.40	0.54	0.65

③ Ambient temperature coefficient

Ambient temperature	Coefficient
25°C	1.08
30°C	1.02
32°C	1.00
35°C	0.90
40°C	0.72
45°C	0.47

④ Inlet air pressure coefficient

Inlet air pressure	Coefficient
0.1 MPa *1	0.50
0.2MPa	0.65
0.3 MPa	0.75
0.4 MPa	0.83
0.5 MPa	0.89
0.6 MPa	0.94
0.7 MPa	1.00
0.8 MPa	1.01
0.9 MPa	1.02
1.0 MPa	1.03

⑤ Upper limit coefficient

Use conditions (inlet air pressure)	Coefficient		
	GX3203D GX3211D GX3215D GX3222D GX3237D GX3255D	GX3206D	GX3208D
0.1 MPa *1	0.65	0.55	0.57
0.2 MPa	0.84	0.71	0.74
0.3 MPa	0.97	0.82	0.86
0.4 MPa	1.07	0.91	0.95
0.5 MPa	1.15	0.97	1.02
0.6 MPa	1.22	1.03	1.08
0.7 MPa	1.30	1.10	1.15
0.8 MPa	1.31	1.11	1.16
0.9 MPa	1.32	1.12	1.17
1.0 MPa	1.33	1.13	1.18

*1: GX3203D is 0.15 MPa.

Dimensions CAD

●GX3203D,GX3206D,GX3208D

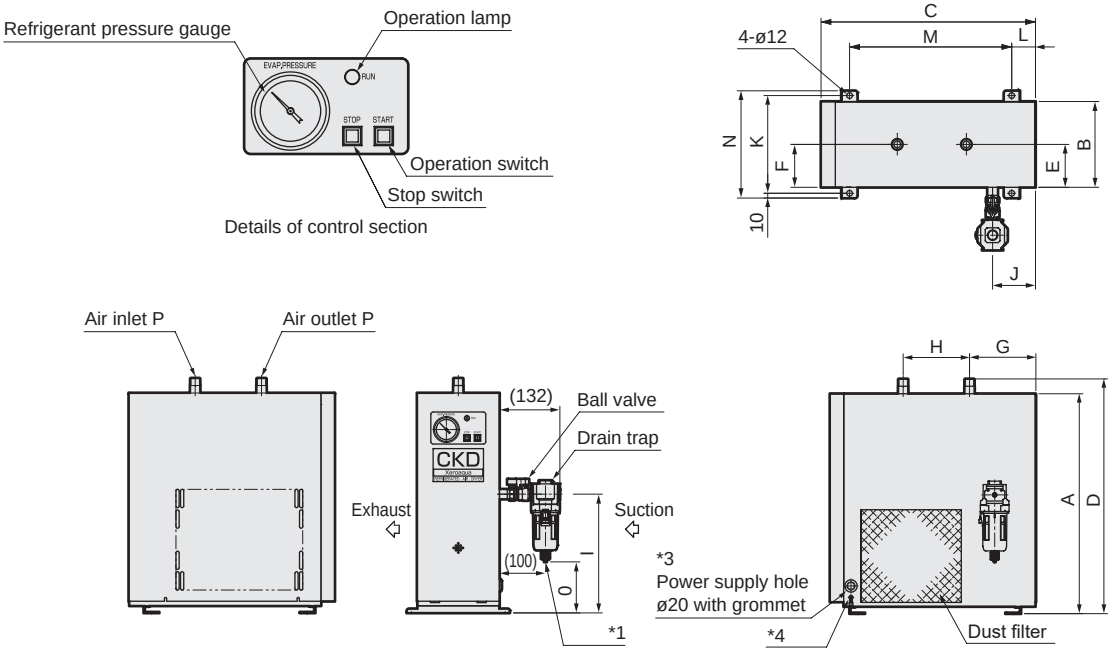

*1: Directly insert a nylon tube with an inner diameter of ø5.7 to ø6.0 into the drain cock.
*2: The drain trap and ball valve are included products.
*3: A power supply cable (approx. 1.8 m) equipped with a plug is included with the 100 VAC.
*4: A grounding terminal (TMEV2-4) is attached to the panel with the 100 VAC.

Model No.	A	B	C	D	E	F	G	H	I	J	K	L	M
GX3203D	480	180	450	513	90	90	145	145	(260)	90	205	50	340
GX3206D	510	180	540	542	113	83	120	300	(274)	96	205	60	420
GX3208D	510	240	600	537	140	140	138	335	(280)	78	265	60	480

Model No.	N	O	P
GX3203D	225	(112)	R 1/2
GX3206D	225	(126)	R 1/2
GX3208D	285	(132)	R 3/4

●GX3211D

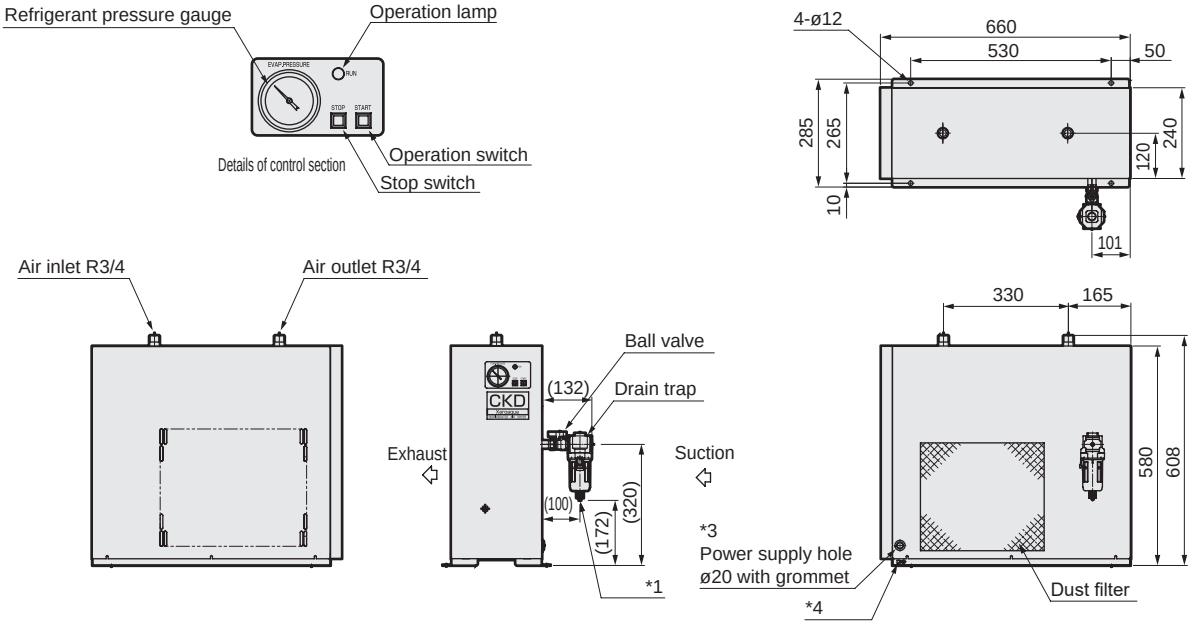

*1: Directly insert a nylon tube with an inner diameter of ø5.7 to ø6.0 into the drain cock.
*2: The drain trap and ball valve are included products.
*3: A power supply cable (approx. 1.8 m) equipped with a plug is included with the 100 VAC.
*4: A grounding terminal (TMEV2-4) is attached to the panel with the 100 VAC.

Dimensions

●GX3215D,GX3222D

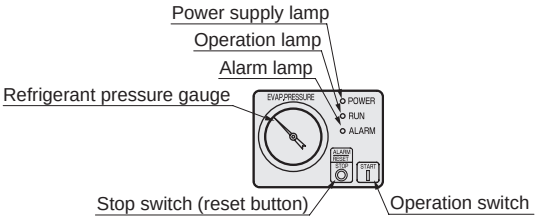

Details of control section

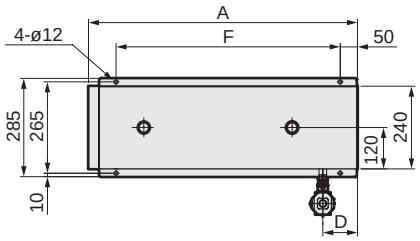

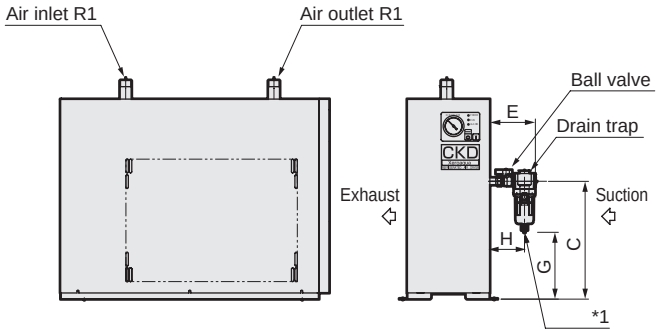

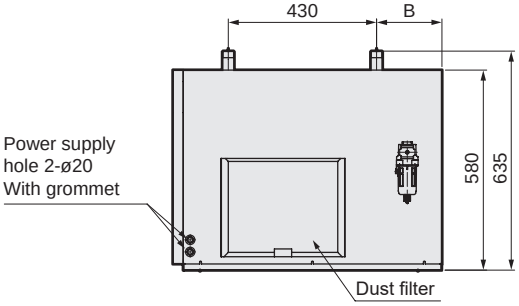

*1: Directly insert a nylon tube with an inner diameter of ø5.7 to ø6.0 into the drain cock.
*2: The drain trap and ball valve are included products.

Model No.	A	B	C	D	E	F	G	H
GX3215D	780	190	(340)	101	(132)	650	(192)	(100)
GX3222D	870	280	(370)	105	(149)	740	(199)	(109)

●GX3237D,GX3255D

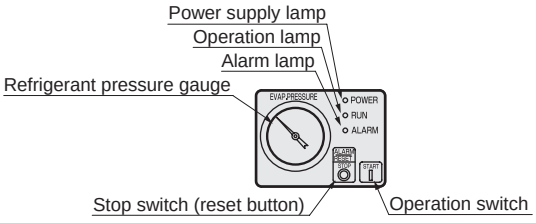

Details of control section

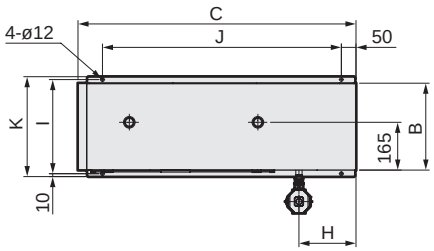

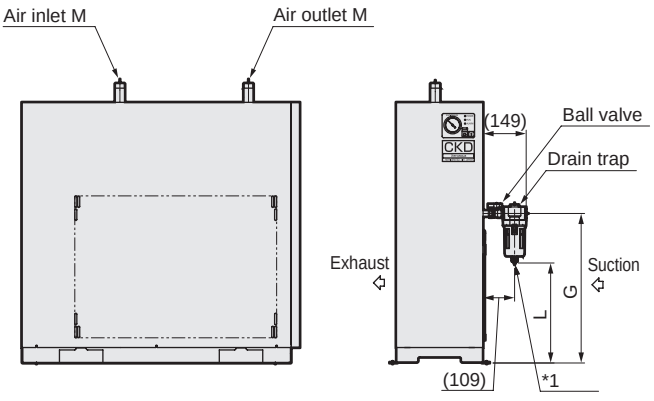

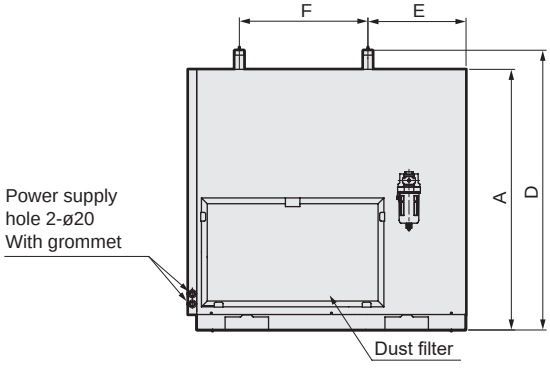

*1: Directly insert a nylon tube with an inner diameter of ø5.7 to ø6.0 into the drain cock.
*2: The drain trap and ball valve are included products.

Model No.	A	B	C	D	E	F	G	H	I	J	K	L	M
GX3237D	900	300	960	966	338	447	(516)	197	325	825	345	(345)	R1 1/2
GX3255D	1100	330	990	1165	325	500	(701)	145	355	855	375	(530)	R2

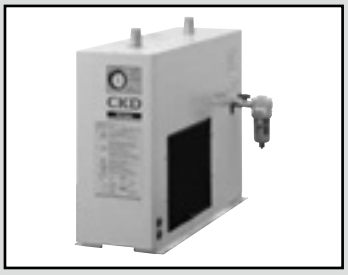

Refrigeration air dryer Xeroaqua Air cooling

GX5200D Series

High-temperature inlet air

Compatible air compressors: for 2.2, 3.7, 5.5, 7.5, 11, 15, 22, 37, 55, 75 kW

JIS symbol



RoHS CAD

Specifications

1 MPa ≈ 145.0 psi, 1 MPa = 10 bar

Model No.		GX5203D	GX5204D	GX5206D	GX5208D	GX5211D	GX5215D	GX5222D	GX5237D	GX5255D	GX5275D
Applicable air compressor kW		to 2.2	3.7	5.5	7.5	11	15	22	37	55	75
Working range	Working fluid	Compressed air									
	Inlet air temperature °C	5 (41°F) to 80 (176°F)									
	Inlet air pressure MPa	0.15 to 1.0	0.1 (≈15 psi, 1 bar) to 1.0 (≈150 psi, 10 bar)								0.29 to 0.98
	Ambient temperature °C	2 (35.6°F) to 45 (113°F) (*2)				2 (35.6°F) to 45 (113°F)				2 (35.6°F) to 48 (118°F)	
Rating	Processing air rate m^3/min (ANR) 50/60 Hz (*3)	0.30/0.35	0.44/0.50	0.64/0.72	1.22/1.32	1.65/1.82	2.10/2.40	3.70/4.20	5.70/6.10	8.60/9.90	11.4/12.6
	Processing air rate (compress suction state) m^3/min 50/60 Hz (*4)	0.31/0.37	0.46/0.52	0.67/0.76	1.28/1.38	1.73/1.91	2.20/2.52	3.88/4.41	5.98/6.40	9.10/10.5	12.1/13.4
	Inlet air temperature °C	55 (131°F)									
	Inlet air pressure MPa	0.7 (≈100 psi, 7 bar)									
	Ambient temperature °C	32 (89.6°F)									
Perfm.	Outlet air pressure dew point °C (*5)	10 (50°F)									
	Pressure drop MPa 50/60Hz (*6)	0.002/0.003	0.002/0.003	0.010/0.013	0.005/0.006	0.006/0.007	0.009/0.012	0.016/0.020	0.011/0.013	0.008/0.011	0.005/0.006
Power supply		Single-phase 100/100, 110 VAC 50/60 Hz Single-phase 200, 220/200, 220 VAC 50/60 Hz			Single phase 200, 220/ 200, 220 VAC 50/60 Hz	Three-phase 200/200, 220 VAC 50/60 Hz					
Electrical specifications (*7)	Power consumption (at 100, 110 V) kW 50/60 Hz	0.26/0.27,0.30	0.32/0.34,0.41	0.34/0.37,0.40	-	-	-	-	-	-	-
	Power consumption (at 200, 220 V) kW 50/60 Hz	0.24,0.28/ 0.26,0.29	0.29,0.35/ 0.32,0.34	0.32,0.36/ 0.36,0.40	0.42,0.47/ 0.48,0.49	0.63/ 0.75,0.78	0.69/ 0.78,0.87	1.21/ 1.48,1.48	1.31/ 1.62,1.64	2.50/ 3.00,3.00	3.00/ 3.90,3.90
	Current consumption (at 100, 110 V) A 50/60 Hz	3.2/2.8,2.8	3.9/3.4,3.7	4.3/3.8,3.8	-	-	-	-	-	-	-
	Current consumption (at 200, 220 V) A 50/60 Hz	1.4,1.6/1.3,1.3	1.7,2.1/1.6,1.6	1.8,2.0/1.8,1.8	2.6,2.9/2.5,2.3	2.5/2.5,2.5	3.0/2.8,3.0	4.7/4.8,4.6	5.4/5.7,5.5	9.5/9.5,9.4	10.7/11.7,11.5
	Starting current (at 100 V) A 50/60 Hz	11.1/12.1	16.4/17.3	16.4/17.3	-	-	-	-	-	-	-
	Starting current (at 200 V) A 50/60 Hz	6.3/6.2	7.7/7.3	7.7/7.3	13.2/12.4	22.5/25.0	27.5/31.5	31.5/40.6	41.3/43.8	110/100	110/115
Refrigerant		R-134a			R-410A						
Air inlet and outlet port size		R 1/2	R 3/4	R 3/4	R 3/4	R1	R1	R1	R1 1/2	R2	R2
Weight kg		21	26	31	37	39	42	68	84	139	190
Released heat kW 50/60Hz (*7)		0.63/0.70	0.74/0.80	1.1/1.3	1.6/1.7	2.1/2.3	2.3/2.5	4.4/5.0	5.4/6.0	10.3/11.9	13.2/14.9

*1: Outer panel: Quality cool white (Munsell No. 5GY7.5/0.5)

*2: When the power supply voltage is ±5%. 2 to 40°C for power supply voltage ±10%.

*3: ANR shows conditions of 20°C atmospheric pressure and relative humidity 65%.

*4: Value converted into air compressor intake state at 32°C atmospheric pressure and relative humidity 75%.

*5: Contact CKD for information on the dew point performance guarantee.

*6: The pressure drop value is a typical value and is not a guaranteed value.

*7: The power consumption, current consumption, and exhaust heat are all reference values under the rated conditions and are not guaranteed values.

How to order

GX52 **03D** - **M** - **AC200V**

Ⓐ Capacity category　Ⓑ Option *1　Ⓒ Voltage

Code	Description
Ⓐ Capacity category	
03D	Up to 2.2 kW
04D	3.7 kW
06D	5.5 kW
08D	7.5 kW
11D	11 kW
15D	15 kW
22D	22 kW
37D	37 kW
55D	55 kW
75D	75 kW

Ⓑ Option	
Blank	Standard products
G	Optional different voltage (GX5255D, GX5275D only)
H2	Stainless steel nameplate
H3	Simple export packaging *3
M	Operation/fault signal output *2 (only compatible with GX5211D, 5215D, 5222D, 5237D)
M3	Remote control & operation/error signal output *2 (only compatible with GX5203D, 5204D, 5206D, 5208D)
N1	Copper tube rust proof coating
Q1	Drain piping right (GX5255D/GX5275D only)

Ⓒ Voltage
100 VAC (GX5203D, GX5204D, GX5206D only)
200 VAC
220 VAC (standard only for 60 Hz) (GX5255D, GX5275D only)
230 VAC (GX5255D, GX5275D only)
240 VAC (GX5255D, GX5275D only)
380 VAC (GX5255D, GX5275D only)
400 VAC (GX5255D, GX5275D only)
415 VAC (GX5255D, GX5275D only)
440 VAC (GX5255D, GX5275D only)
480 VAC (GX5255D, GX5275D only)

Precautions for model No. selection

*1: Indicate options in alphabetical order.
*2: The equipment of remote control and operation/error signals are as listed in the table below.

Model No.	Terminal for remote control	Operation/error signal
GX5203D, 5204D 5206D, 5208D	Option M3 (Momentary)	Option M3
GX5211D, 5215D 5222D, 5237D	Standard equipment (Alternate)	Option M
GX5255D		Standard equipment
GX5275D		

*3: Option H3 is packaged in plywood.
*4: The instruction manual and nameplates are provided in Japanese and English.
*5: Contact CKD if a photo of the completed product is required.
*6: Contact CKD to designate the color of the body panel.

Selection guide (GX5203D to GX5237D)

When determining the appropriate model from the max. processing air rate of each model No.

Reference processing air rate × (1) Pressure dew point coefficient × (2) Inlet air temperature coefficient × (3) Ambient temperature coefficient × (4) Inlet air pressure coefficient = Max. processing air rate

Note: Select with conditions where the value of the product of each coefficient ((1)×(2)×(3)×(4)) does not exceed the ceiling coefficient of (5).

Conditions	Working conditions	Selecting conditions	Coefficient
Pressure dew point	Below 7°C	5°C	(1) 0.58
Inlet air temperature	55 to 63°C	65°C	(2) 0.72
Ambient temperature	25 to 33°C	35°C	(3) 0.90
Inlet air pressure	0.55 to 0.75 MPa	0.5 MPa	(4) 0.89
Frequency	50 Hz	50 Hz	50 Hz

Substitute the conditions on the left into the equation above to obtain the processing air rate when using the GX5208.
Product of each coefficient
(1) × (2) × (3) × (4) = 0.58 × 0.72 × 0.90 × 0.89 = 0.33
The (5) ceiling coefficient of 1.15 at the inlet air pressure 0.5 MPa (use conditions) is exceeded.
The maximum processing air rate is
1.22 (reference processing air rate) x 0.33 = 0.40 m^3/min (ANR).
If the used flow rate is less than or equal to this value, select that model.

① Pressure dew point coefficient

Pressure dew point	Coefficient (GX5203D GX5204D GX5206D GX5208D GX5211D GX5215D GX5222D GX5237D)
15°C	1.15
10°C	1.00
7°C	0.72
5°C	0.58

② Inlet air temperature coefficient

Inlet air temperature	Coefficient GX5203D GX5204D GX5206D	Coefficient GX5208D GX5211D GX5215D GX5222D GX5237D
40°C	1.12	1.30
45°C	1.08	1.20
50°C	1.04	1.10
55°C	1.00	1.00
60°C	0.84	0.84
65°C	0.72	0.72
70°C	0.60	0.60
75°C	0.45	0.45
80°C	0.30	0.30

③ Ambient temperature coefficient

Ambient temperature	Coefficient (GX5203D GX5204D GX5206D GX5208D GX5211D GX5215D GX5222D GX5237D)
25°C	1.08
30°C	1.02
32°C	1.00
35°C	0.90
40°C	0.72
45°C	0.47

④ Inlet air pressure coefficient

Inlet pressure	Coefficient (GX5203D GX5204D GX5206D GX5208D GX5211D GX5215D GX5222D GX5237D)
0.1 MPa *1	0.50
0.2 MPa	0.65
0.3 MPa	0.75
0.4 MPa	0.83
0.5 MPa	0.89
0.6 MPa	0.94
0.7 MPa	1.00
0.8 MPa	1.01
0.9 MPa	1.02
1.0 MPa	1.03

⑤ Ceiling coefficient

Working conditions (Inlet air pressure)	Coefficient (GX5203D GX5204D GX5206D GX5208D GX5211D GX5215D GX5222D GX5237D)
0.1 MPa *1	0.65
0.2 MPa	0.84
0.3 MPa	0.97
0.4 MPa	1.07
0.5 MPa	1.15
0.6 MPa	1.22
0.7 MPa	1.30
0.8 MPa	1.31
0.9 MPa	1.32
1.0 MPa	1.33

*1: GX5203D is 0.15 MPa.

Selection guide (GX5255D/GX5275D)

(1) Temperature compensation coefficient

Inlet air temperature (°C)		45				55				60			
Pressure dew point (°C)		5	7	10	15	5	7	10	15	5	7	10	15
Ambient temperature (°C)	25	0.93	1.04	1.15	1.15	0.89	1.01	1.15	1.15	0.85	0.91	1.01	1.09
	30	0.76	0.94	1.15	1.15	0.73	0.86	1.06	1.15	0.71	0.78	0.89	1.06
	32	0.75	0.93	1.15	1.15	0.68	0.81	1.00	1.15	0.65	0.73	0.84	1.05
	35	0.66	0.83	1.08	1.15	0.60	0.72	0.90	1.09	0.58	0.65	0.76	0.97
	40	0.51	0.65	0.86	1.00	0.51	0.59	0.72	0.89	0.47	0.52	0.60	0.75
	45	0.28	0.47	0.76	0.90	0.27	0.41	0.63	0.75	0.20	0.33	0.53	0.70
	48	0.23	0.40	0.65	0.72	0.21	0.34	0.54	0.68	0.15	0.27	0.45	0.63

Inlet air temperature (°C)		65				70				75				80			
Pressure dew point (°C)		5	7	10	15	5	7	10	15	5	7	10	15	5	7	10	15
Ambient temperature (°C)	25	0.80	0.82	0.86	0.89	0.77	0.80	0.84	0.90	0.74	0.75	0.76	0.83	0.70	0.69	0.67	0.76
	30	0.68	0.71	0.76	0.87	0.64	0.65	0.67	0.87	0.60	0.58	0.56	0.80	0.53	0.50	0.45	0.72
	32	0.62	0.66	0.72	0.86	0.59	0.60	0.61	0.84	0.55	0.53	0.49	0.76	0.47	0.43	0.37	0.68
	35	0.55	0.59	0.65	0.80	0.52	0.53	0.55	0.75	0.49	0.47	0.44	0.65	0.36	0.35	0.33	0.55
	40	0.43	0.47	0.52	0.61	0.41	0.42	0.44	0.55	0.39	0.37	0.35	0.46	0.33	0.31	0.27	0.36
	45	0.14	0.26	0.45	0.58	0.13	0.23	0.38	0.52	0.09	0.17	0.30	0.44	0.06	0.13	0.23	0.34
	48	0.08	0.20	0.39	0.52	0.06	0.17	0.33	0.51	0.03	0.12	0.26	0.43	0.01	0.09	0.20	0.33

(2) Inlet air pressure coefficient

GX5255D

Inlet air pressure (MPa)	0.10	0.20	0.30	0.40	0.50	0.60	0.70	0.80	0.90	1.00
Coefficient	0.60	0.67	0.73	0.80	0.87	0.93	1.00	1.07	1.13	1.20

GX5275D

Inlet air pressure (MPa)	0.29	0.30	0.40	0.50	0.60	0.70	0.80	0.90	0.98
Coefficient	0.72	0.73	0.80	0.87	0.93	1.00	1.07	1.13	1.20

(3) Ceiling coefficient

Working conditions (inlet air pressure (MPa))	0.10	0.20	0.29	0.30	0.40	0.50	0.60	0.70	0.80	0.90	0.98	1.00
Coefficient	0.69	0.77	0.82	0.83	0.92	1.00	1.06	1.15	1.23	1.29	1.38	1.38

When determining the appropriate model from the reference processing air rate of each model No.
Reference processing air rate × (1) Temperature correction coefficient × (2) Inlet air pressure coefficient = Maximum processing air rate
*1: Select with conditions where the value of the product of each coefficient ((1)×(2)) does not exceed the upper limit coefficient of (3).

Conditions	Working conditions	Selecting conditions	Coefficient
Inlet air temperature	55 to 63°C	65°C	(1) 0.55
Pressure dew point	Below 7°C	5°C	
Ambient temperature	25 to 33°C	35°C	
Inlet air pressure	0.55 to 0.75 MPa	0.5 MPa	(2) 0.87
Frequency	50 Hz	50 Hz	50 Hz

Substitute the above conditions into the equation above to obtain the processing air rate when using GX5255D.
Product of each coefficient
(1) × (2) = 0.55 × 0.87 = 0.47
As the (3) ceiling coefficient of 1.00, when the inlet air pressure of the working conditions is 0.5 MPa, is not exceeded, the max. processing air rate will be 8.6 (reference processing air rate) × 0.47 = 4.0 m^3/min (ANR).
If the used air quantity is less than or equal to this value, select that model.

Dimensions

●GX5203D,GX5204D,GX5206D

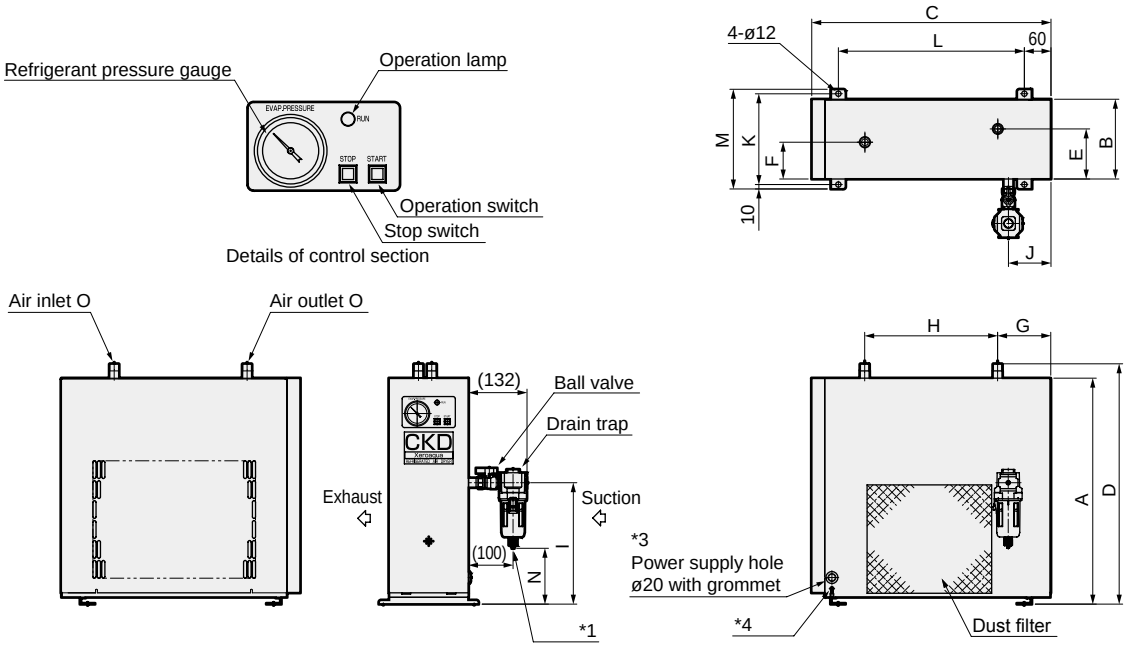

*1: Directly insert a nylon tube with an inner diameter of ø5.7 to ø6.0 into the drain cock.
*2: The drain trap and ball valve are included products.
*3: A power supply cable (approx. 1.8 m) equipped with a plug is included with the 100 VAC.
*4: A grounding terminal (TMEV2-4) is attached to the panel with the 100 VAC.

Model No.	A	B	C	D	E	F	G	H	I	J	K	L	M
GX5203D	510	180	540	542	113	83	120	300	(274)	96	205	420	225
GX5204D	510	240	600	537	140	140	138	335	(280)	78	265	480	285
GX5206D	600	240	660	627	140	140	84	416	(370)	105	265	542	285

Model No.	N	O
GX5203D	(126)	R 1/2
GX5204D	(132)	R 3/4
GX5206D	(222)	R 3/4

●GX5208D

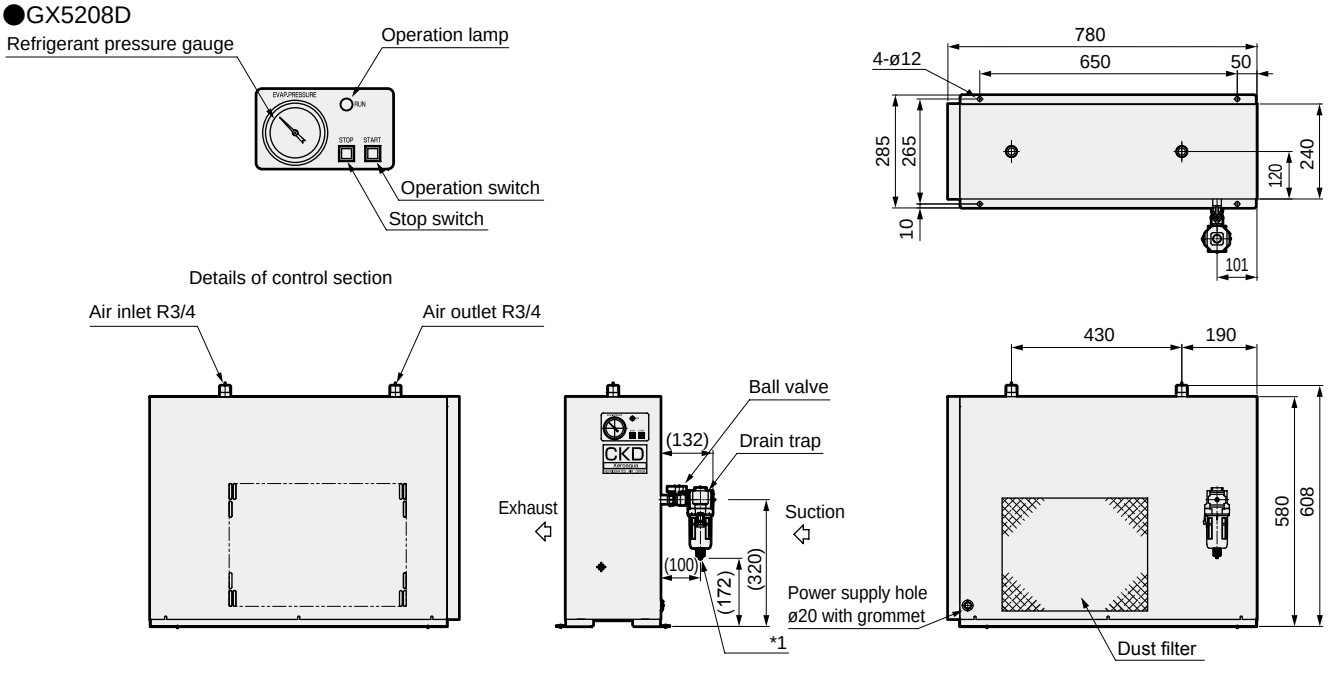

*1: Directly insert a nylon tube with an inner diameter of ø5.7 to ø6.0 into the drain cock.
*2: The drain trap and ball valve are included products.

Dimensions CAD

●GX5211D,GX5215D

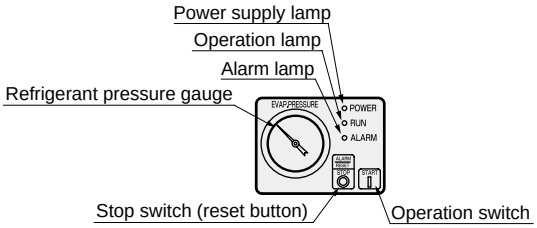

Details of control section

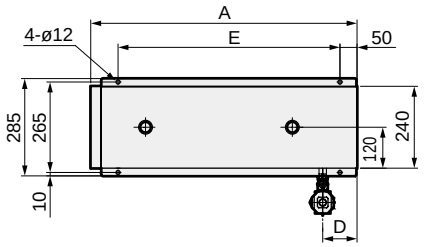

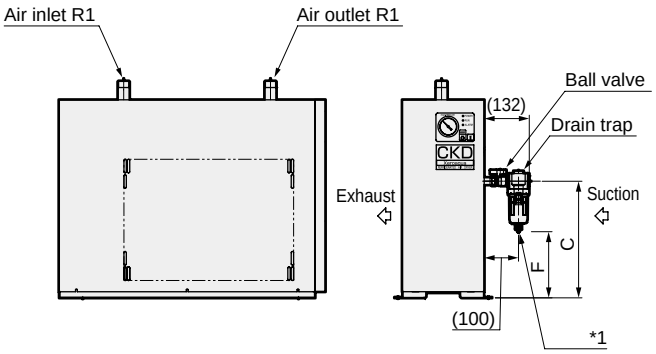

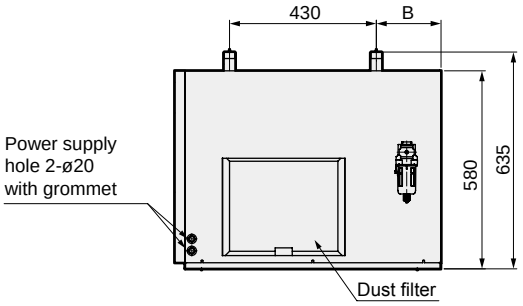

*1: Directly insert a nylon tube with an inner diameter of ø5.7 to ø6.0 into the drain cock.
*2: The drain trap and ball valve are included products.

Model No.	A	B	C	D	E	F
GX5211D	780	190	(340)	101	650	(192)
GX5215D	870	280	(370)	105	740	(222)

●GX5222D,GX5237D

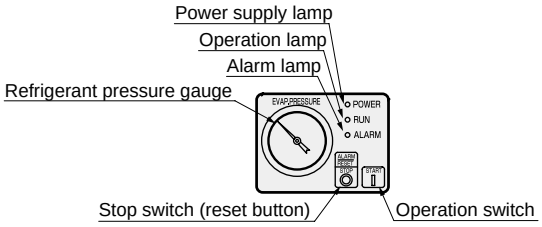

Details of control section

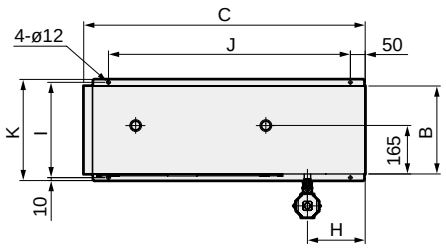

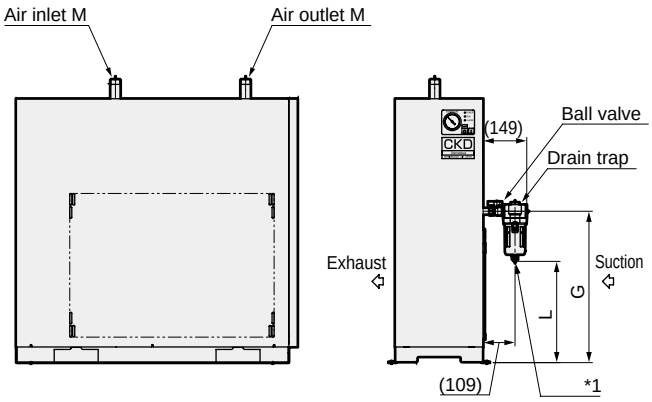

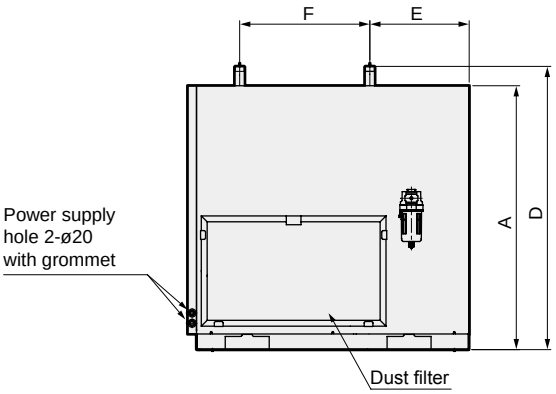

*1: Directly insert a nylon tube with an inner diameter of ø5.7 to ø6.0 into the drain cock.
*2: The drain trap and ball valve are included products.

Model No.	A	B	C	D	E	F	G	H	I	J	K	L	M
GX5222D	900	300	960	966	341	444	(516)	197	325	825	345	(345)	R1
GX5237D	1100	330	990	1165	325	500	(701)	145	355	855	375	(530)	R1 1/2

Dimensions

● GX5255D

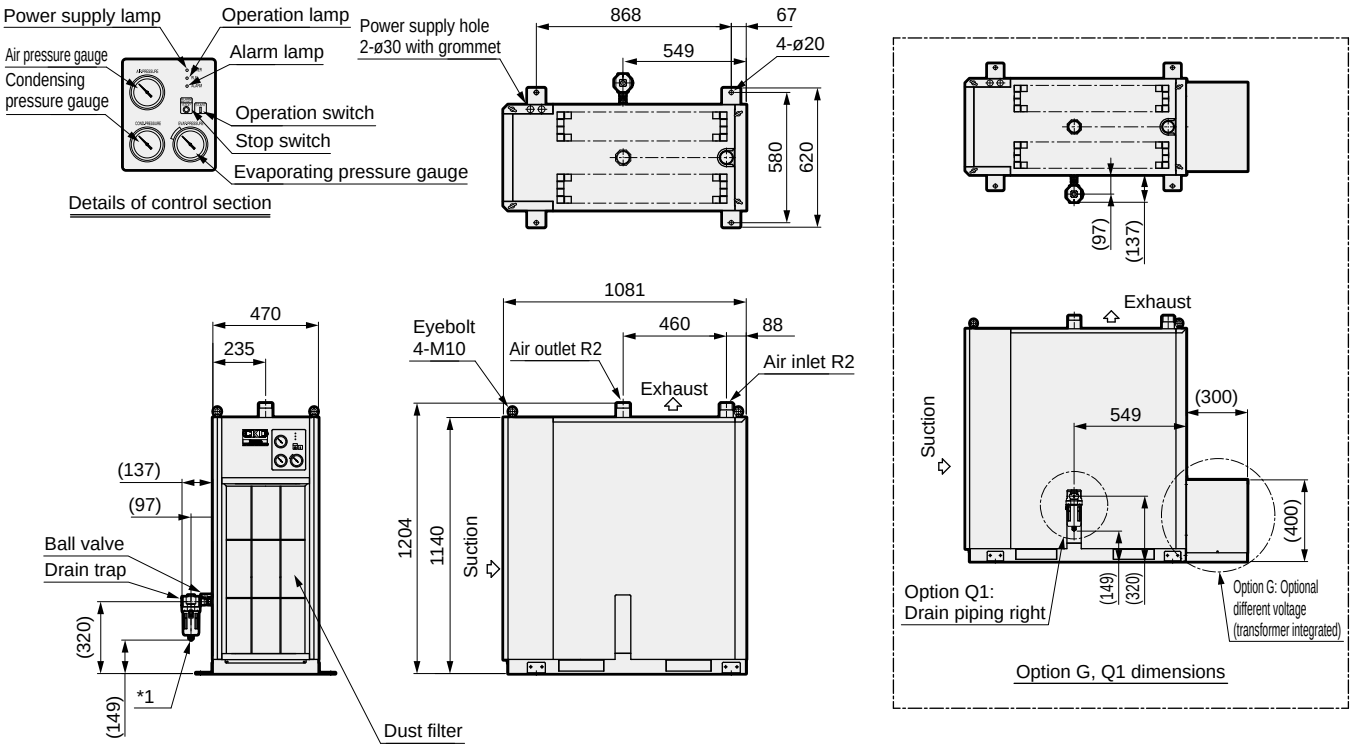

*1: Directly insert a nylon tube with an inner diameter of ø5.7 to ø6.0 into the drain cock.
*2: The drain trap and ball valve are included.

● GX5275D

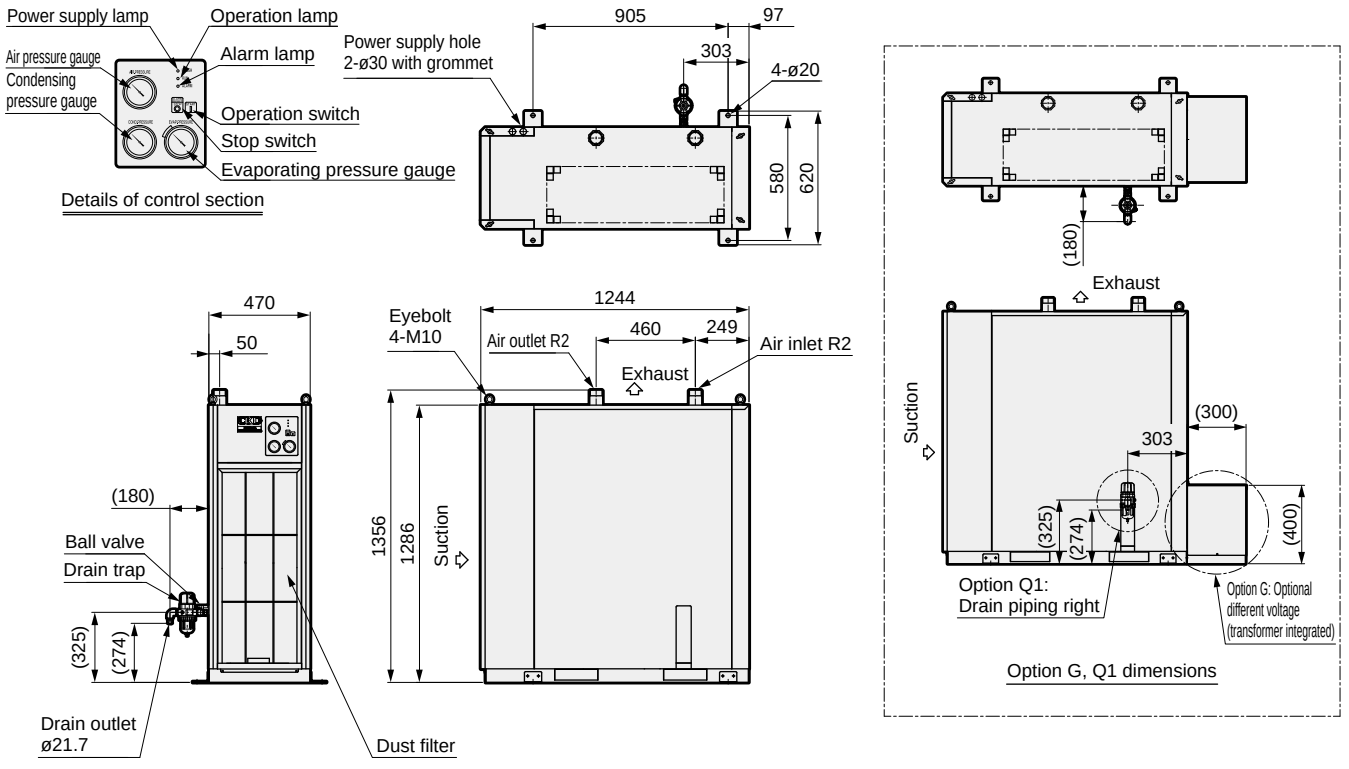

*1: The drain trap and ball valve are included.

Accessory (sold separately)

Foundation bolt set (sold separately)

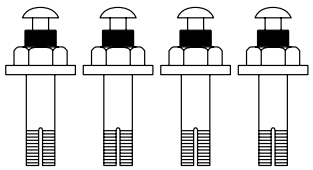

Part number	Compatible model	Size	Material	Quantity
RD-QFL-436495	GX3203D,GX3206D GX3208D,GX3211D GX3215D,GX3222D GX3237D,GX3255D GX5203D,GX5204D GX5206D,GX5208D GX5211D,GX5215D GX5222D,GX5237D	M10×100	SUS	4
RD-QFL-436465	GX5255D, GX5275D	M16×100	SUS	4

Bypass piping set (sold separately)

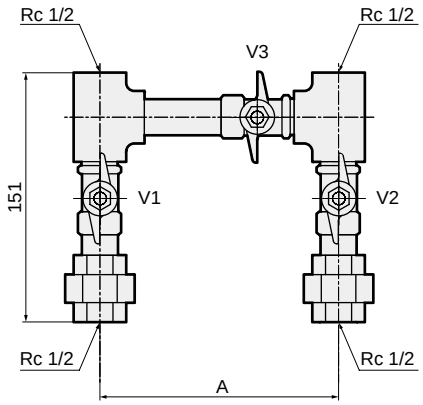

No.	Compatible model	A
RD-AD3-311269	GX3203D	145
RD-AD3-311270	GX3206D,GX5203D	300

V1, V2, V3 ----- Ball valve
V1, V2 : Normally open (NO)
V3 : Normally closed (NC)

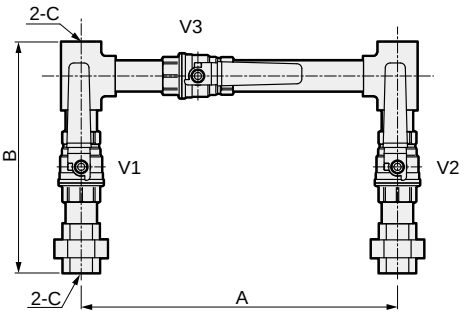

No.	Compatible model	A	B	C
RD-AD3-311271	GX3208D,GX5204D	335	208	Rc3/4
RD-AD3-311272	GX3211D	330	209	Rc3/4
RD-AD3-219888	GX3215D,GX3222D GX5211D,GX5215D	430	258	Rc1
RD-AD3-219889	GX3237D	447	314	Rc1 1/2
RD-AD3-249894	GX3255D	500	343	Rc2
RD-AD3-311273	GX5206D	416	208	Rc3/4
RD-AD3-311274	GX5208D	430	209	Rc3/4
RD-AD3-219890	GX5222D	444	258	Rc1
RD-AD3-219891	GX5237D	500	314	Rc1 1/2
RD-AD3-249896	GX5255D, GX5275D	460	343	Rc2

V1, V2, V3 ----- Ball valve
V1, V2 : Normally open (NO)
V3 : Normally closed (NC)

Safety Precautions

Be sure to read this section before use. Refer to Intro Page 63 for general precautions.

Product-specific cautions: Xeroaqua dryer GX Series

Manufacturer's Exemption of Liability

⚠ WARNING

■ The manufacturer cannot be held liable in the following cases:

- In the case where there are serious errors in the operator's use.
- Inappropriate modifications or repairs using nonstandard parts, made by the user.

Design/selection

Applications

⚠ WARNING

■ Do not use for applications other than removing moisture from compressed air.

■ Do not use for caisson shields or medical devices such as breathing devices.
- There is a risk of personal injury.

⚠ CAUTION

■ Do not mount or use in transportation equipment such as vehicles or ships.
- The internal devices could be damaged by vibration, etc.

■ When using the product in a compressed air line subject to rapid fluctuations of pressure, install an air tank, etc., after the air dryer to ensure that the fluctuations of pressure are kept at 0.34 MPa/min or less. Rapid fluctuations of pressure may cause failure.

■ When sudden load fluctuations can be expected to occur, select a model with a margin of capacity.

Air quality

⚠ CAUTION

■ Do not use when the inlet air contains corrosive gas, chemical solutions, organic solvents, or combustible gas. (Refer to page 1725)

Air temperature

⚠ CAUTION

■ Do not use in an environment that exceeds the max. inlet air temperature or max. working pressure.

■ When the inlet air temperature is high, install an after cooler, etc., in order to lower the temperature to the max. inlet air temperature or below for use. The drainage generated with the after cooler should be removed before the dryer.

During transport

⚠ WARNING

■ This product is filled with less than 12 kg of refrigerant (R-134a, R-410A, R-407C).

Upon transport (land, sea, air), be sure to comply with the laws and regulations applicable to each situation.

Transportation

⚠ WARNING

■ Laying the product on its side or applying vibration or impact during transportation are strictly prohibited.

■ Transportation with a forklift
(Compatible models GX3237D, GX3255D, GX5222D,GX5237D, GX5255D, GX5275D)

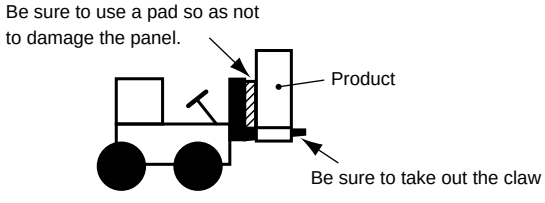

■ Transportation with a crane

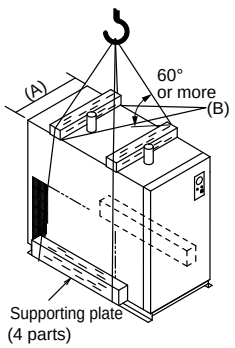

Supporting plate
Make sure that the supporting plate length (B) is longer than the dryer width (A) by approximately 100 mm.

Be sure to place a cushioning material between the supporting plate and the dryer to prevent scratching of the panel.

Mounting, installation and adjustment

Electric wiring

⚠ WARNING

- Use within the power voltage range in the specifications.
- Select wires with suitable capacities.

Adjustment/operation

⚠ WARNING

- Refrain from frequently starting/stopping the unit. This may lead to failure.
- When starting/stopping the dryer as a system, "Starting/stopping the dryer shall be 10 times/hour or less and the time from restart to the next stop shall be 5 minutes or more. In addition, the stopped time shall be 3 minutes and over." is to be always kept in consideration.
- Be sure to install an overload protection and circuit breaker on the source power supply in order to prevent electrocution due to power leakage and for independent overload protection.
- Be sure to establish a ground connection. In addition, absolutely refrain from connecting the ground wire to a water pipe, gas pipe, or a lightning rod.

Ambient temperature

⚠ CAUTION

- Do not use this product in areas that exceed the max. operating ambient temperature.
- Do not install this product in areas subject to radiant heat.
- When the max. operating ambient temperature is likely to be exceeded, implement countermeasures by installing fans and air inlets.
- Do not use this product in areas that fall under the min. operating ambient temperature.

Place

⚠ CAUTION

- Install indoors.
- Install the product in well ventilated areas that are free of waste and dust.
- Install the product so that it is not exposed to rainwater.
- Do not use the product in areas with high humidity or where there is a risk of condensation.
- Avoid using the product in areas exposed to direct sunlight or where heat is generated.
- Do not use in locations with corrosive gases.

Floor surface

⚠ CAUTION

- Install on a floor surface that is not subject to vibration.
- Install on a level floor surface.
- Be sure to shore up foundations in areas where the ground is soft.
- The hole dimensions and positions for the foundation bolts are as shown in the dimensions.

Vibration

⚠ CAUTION

- When using a reciprocating compressor, use a rubber hose for high pressure or a flexible tube for a part of the piping with the air dryer to absorb vibrations.

Maintenance space

⚠ CAUTION

- Make sure that the space is well ventilated, and secure enough space for maintenance and inspection.
  - Series: GX3203D to 3255D, GX5203D to 5237D
    All 4 sides: 600 mm or more
  - Compatible models: GX5255D, 5275D
    Front: 1000 mm or more,
    Either right or left side: 600 mm or more

Air piping method

⚠ CAUTION

- Arrange the piping of the dryer as shown in the figure below.

For 24-hour operation:
To prepare for unexpected situations, parallel installation is recommended.
1 unit can be used for normal use while the other will serve as a spare unit.

For intermittent operation:
Be sure to install a bypass pipe for maintenance.

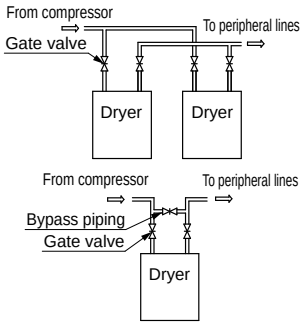

- Galvanized steel pipes (white pipes) are recommended as piping materials. In addition, use stainless steel pipes depending on the specifications or applications.
- When using existing pipes or black pipes, or if an oil-free air compressor is to be used and a large amount of waste, etc., may be generated within the pipes, install an air filter before the dryer.
- Design the piping so that the weight of the pipes is not applied to the body.
- Make sure that the pipes used are capable of sufficiently withstanding the working pressure and ensure that there is no leakage of air from connected areas.

Drain piping method

⚠ CAUTION

- The drain trap is installed on the outside of the dryer. With the GX3200D Series and GX5208D through GX5255D, directly insert a nylon tube with an inner diameter of 5.7 to 6.0 mm into the cock of the drain discharger.

- The drain trap is installed on the outside of the dryer. Although the discharge interval time of the drain is adjusted to 25 to 37 times/30 seconds (0.59 MPa) upon shipping, adjust the interval time in accordance with the working conditions to prevent the bowl from becoming filled with water due to the needle valve of the drain trap. Discharge the drain only after atmosphere release.
  (Applicable model: GX5275D)

- Make sure the tube length is 5 m or less, vertical piping is avoided, and that the exhaust end uses atmospheric release.

- In cases when oil will be mixed with the drainage, wastewater treatment is required. Consult a nearby business operator specializing in industrial waste for treatment of the wastewater.

- Secure the drainage tube, etc., to prevent the tube from moving during drain discharge.

- Use the ball valve before the drain trap in a fully open state during normal operation. Use the ball valve during maintenance.

Use/maintenance

Air quality

⚠ CAUTION

- Do not use when the inlet air contains corrosive gas, chemical solutions, organic solvents, or combustible gas.

Air temperature

⚠ CAUTION

- Do not use in an environment that exceeds the max. inlet air temperature or max. working pressure.

- When the inlet air temperature is high, install an after cooler, etc., in order to lower the temperature to the max. inlet air temperature or below for use.
  The drainage generated with the after cooler should be removed before the dryer.

- When using the product in a compressed air line subject to rapid fluctuations of pressure, install an air tank, etc., after the air dryer to ensure that the fluctuations of pressure are kept at 0.34 MPa/min or less. Rapid fluctuations of pressure may cause failure.

Maintenance

⚠ CAUTION

- Clean the dust filter with a vacuum cleaner or air blower once a month.
  Failure to clean properly may cause failure of the compressor or fan motor, etc.

- Be sure to remove the drain trap once a week for disassembled cleaning. When parts become dirty, this could prevent proper operation and cause the drain to flow out from the secondary side.

Consumable parts

⚠ CAUTION

- Periodically check the parts for deterioration and replace them as necessary to use the product safely through its service life. Refer to the instruction manual included with the product for details.

Regular maintenance parts

⚠ CAUTION

- Periodically inspect the regular maintenance parts and replace them according to the standard replacement time in order to use the product safely through its service life.
  Refer to the instruction manual included with the product for details.

Others

⚠ WARNING

- This product uses Freon (HFC) and falls under the Freon Gas Emissions Act (April 1, 2015) as a Class 1 Specified Product (commercial refrigeration air conditioner).Management responsibility is imposed and penalties apply for violations. Be sure to collect the Freon gas when repairing or disposing of the product, and perform a simple inspection at least once every quarter. Contact CKD for inspection and Freon gas collection.

Installation environment and air quality

⚠ CAUTION

■ Refrigeration air dryers use copper pipes (phosphorus deoxidized copper pipes) for the refrigerant gas pipes and pipes within the heat exchanger. When corrosion causes a hole in these copper pipes, the refrigerant gas will leak and make it impossible to operate the unit, or cause failure such as water leaking from the compressed air outlet side of the air dryer. In addition, copper is also used as conductive materials for the electrical wiring, etc. Corrosion thereof may cause failures which may lead to safety problems such as electrical leakage accidents.
Especially in the copper piping in the heat exchanger, dew formation and desiccation are repeated. If corrosive elements are present, they may condense on the surface of the copper piping and accelerate corrosion. Under such conditions, take special care with the air dryer installation environment and the air taken in by the air compressor. Failures caused by corrosion are not covered by the warranty.
Plant exhaust may contain corrosion-promoting elements such as NOx (nitrogen oxides), SOx (sulfur oxides), and CO_2 (carbon dioxide). Select the air dryer and air compressor installation position with care so that they are not affected by plant exhaust.
In rare cases, if chlorine-based organic solvents (trichloroethylene, etc.), aldehyde or alcohol (formaldehyde generated from building materials or methanol in the chemicals used) are absorbed by the air dryer and hydrolyzed, the copper piping could corrode (like an ant nest). Caution is required in these cases.

Xeroaqua dryer

GT9000(D)

Compatible air compressors: for 75, 90, 120, 150, 190, 240, 300, 380, 450, 710, 960 kW

■ Refining and pressure adjusting components/main line unit/refrigeration air dryer

Overview

With the latest large to ultra-large refrigeration air dryers, energy conservation and environmental problems are addressed.

Features

(1) New refrigerant R-407C, R410A
New refrigerant which does not destroy the ozone layer is utilized in all GT Series models.

(2) Energy-saving operation system
A 50% reduction of power consumption has been realized with models for 300 to 450 kW by keeping unit numbers low, while a 60% reduction of power consumption has been realized with models for 710 kW and 960 kW through inverter control.

(3) SUS heat exchanger
Oil-free stainless steel vessel is used for all models.

(4) Easy maintenance
Secure design allows the operation status to be confirmed at a glance. Central control within the plant is possible with signal takeout.

(5) Universal installation in any area
Depending on the environment for installation, it is possible to install models for 75 to 190 kW right up against walls on the rear and either the right or left. Models for 250 to 450 kW have realized space saving with a top surface exhaust.



CONTENTS

Product introduction	1754
Accessory	1779
Circuits used	1758
System selection	1759
● Air cooling/standard inlet air (40°C) (GT9000(D))	1760
● Water cooling/standard inlet air (40°C) (GT9000W(D))	1768
● Water cooling/standard inlet air (40°C) (GT9000WV2)	1776
⚠ Safety precautions	1780

Simple, reliable, space saving

Further increased reliability and ease of use.
The Xeroaqua dryer GT Series has been reborn in response to the changing needs of our customers.

Operable at ambient temperature of **48°C**
High-temperature environments supported

Installation area reduced by up to **30%**
Space saving supported

Processing air rate increased by up to **10%**
Increased facility efficiency supported



Refrigerated air dryer Xeroaqua

GT Series (75 kW to 190 kW)

High quality, high reliability

Keeps working even at high temperatures

Operation won't stop even in summer. (Max. ambient temperature 48°C)

Heat exchanger with excellent climate resistance

The use of a stainless steel vessel prevents dust generation from the heat exchanger.
The refrigerant pipes within the heat exchanger are nickel plated for improved corrosion resistance.

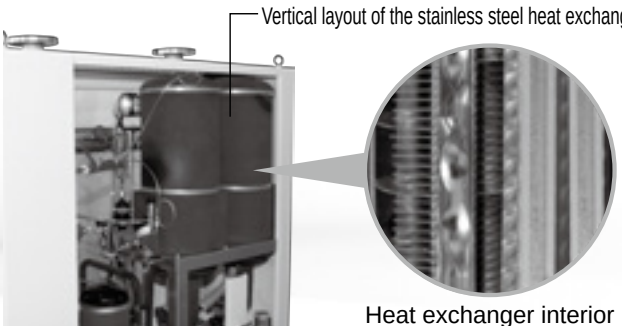

Heat exchanger interior

Easy maintenance

Inspection via control panel

Regular inspection can be performed by simply looking at the control panel. The refrigerant pressure gauge and operation lamp make operating status visible at a glance.

Easy error diagnostics

The causes of error-induced stoppages can be identified through the blinking pattern of the ALARM LED.

When ON	Refrigerant circuit pressure error
When blinking 2 times	Refrigerant circuit temperature error
When blinking 3 times	Current error

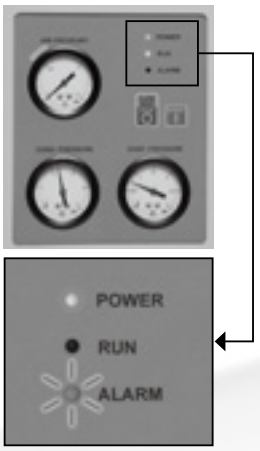

Dust filter installed as standard

Reduces the hassle of condenser cleaning. Attachment and removal are extremely easy.



Centralized control possible

Remote control, operating and alarm signal interface equipped as standard.

Space saving

Space saving realized with top surface exhaust

Top surface exhaust allows the unit to be mounted flush against a wall.

Flush-mounting and freely installable

Select drain trap left or right mounting: depending on the environment, installation is possible flush with the rear and either left or right walls.

* GT9150D(WD) and 9190D(WD) can only be installed flush against walls to the right.
* Right takeout drain trap is an option.

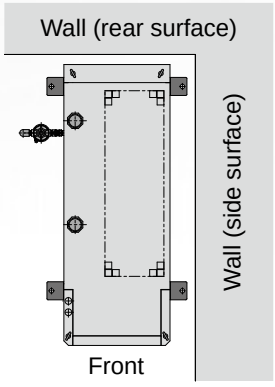

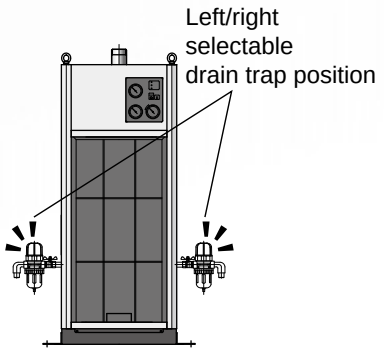

* Note that right side mounting requires optional accessories.

[Series variation]

	Rated conditions: Pressure dew point (°C)	Inlet air pressure (MPa)	Ambient temperature (°C)	Inlet air temperature (°C)	Cooling water inlet temperature (°C)	Applicable air compressor (kW)
Standard inlet/air cooling GT9000(D) Series	10	0.7	32	40	–	55 75 90 120 150 190 240 300 380 450 710 980
Standard inlet/water cooling GT9000W(D) Series	10	0.7	32	40	32	55 75 90 120 150 190 240 300 380 450 710 980
Inverter-controlled/water-cooling type GT9000WV2 Series	10	0.7	32	40	32	55 75 90 120 150 190 240 300 380 450 710 980

Advanced energy saving, ease-of-use, and environment performance.

Refrigeration air dryer

Large model series / 240 to 960 kW

The large Xeroaqua air dryer GT Series with directly connected air compressor has been reborn into three different series with various features.

Promising high quality and high reliability

Stainless steel heat exchanger for oil free compressed air

A heat exchanger incorporating the newly developed stainless steel vessel has been incorporated. This prevents dust generation from the heat exchanger.

Outstanding weather resistance

The refrigerating piping (copper pipes) in the heat exchanger are nickel-plated to improve corrosion resistance.
Stainless steel piping specifications are also available. Contact CKD for information.

No abnormal stop under high loads (GT9000WV2 Series)

The self-protection control activated during high load operation to drop the compressor's speed. This allows operation to be continued without abnormal stopping.

Environment-friendly refrigerant

Environment-friendly refrigerant R-407C

The new refrigerant R-407C has a zero ozone depletion potential. This surpasses conventional refrigerants in terms of global warning.

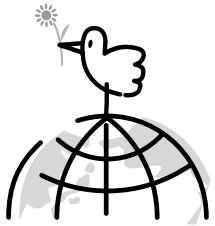

Energy saving

Multi-unit control for 50% power reductions (GT9300 to 9450, GT9300W2 to 9450W)

The 2-stage selection refrigerant system automatically switches to 1-stage energy-saving operation during low loads. Power consumption can be reduced by up to 50%.

Inverter control for 60% power reductions (GT9000WV2 Series)

The compressor's inverter control realizes optimum energy-saving operation which corresponds to the load.
Power consumption can be reduced by up to 60%.

Configurable dew point (GT9000WV2 Series)

Configurable pressure dew point in the range of 10 to 18°C. Power consumption can be reduced drastically by setting above 10°C when dew condensation is unlikely to occur such as during the summer.

Linking dew point temperature to ambient temperature (GT9000WV2 Series)

A function to link the pressure dew point to the ambient temperature and automatically control the link is provided. The dew point temperature is automatically adjusted to a temperature at which condensation does not occur. This eliminates the need to manually change the dew point setting, and realizes ideal energy saving operation.

Same performance at 50 and 60 Hz (GT9000WV2 Series)

The compressor inverter control allows the same performance to be attained in 50 and 60 Hz districts.

Relation of GT9000WV2 Series load rate and power consumption

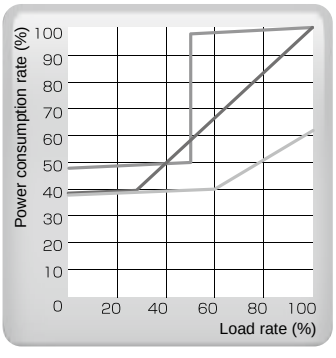

GT 9000(Air cooling) 9000W(Water cooling) 9000WV2(Water cooling inverter) Series



Easy maintenance

The operation status is visible at a glance

The electronic operation panel makes the operating status, dew point and failure status of the dryer visible at a glance.



GT9300(W) to 9450(W)

Air pressure gauge provided as standard

All models are equipped with an air pressure gauge on the operation panel.

Centralized control possible

Central control within the plant is possible with remote operation and operation/error signal output takeout.

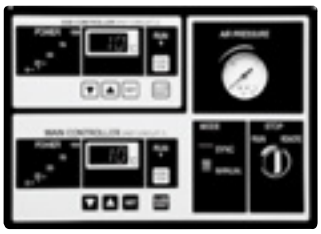

GT9960WV

Equipped with dust filter (GT9240 to GT9450)

Equipped with dust filter for condenser. It can also be attached/detached easily without tools.

With additional service ports (GT9240 to GT9450, GT9240W to GT9450W, GT9000WV2 Series)

Service ports (with check joint) have been provided on the inlet and outlet piping. Usable for monitoring pressure, dew point, etc.

Universal installation anywhere

Space saving realized with top surface exhaust (GT9240 to 9450)

An exhaust duct is mounted on the top of the body to save floor installation space.

■Typical working circuit

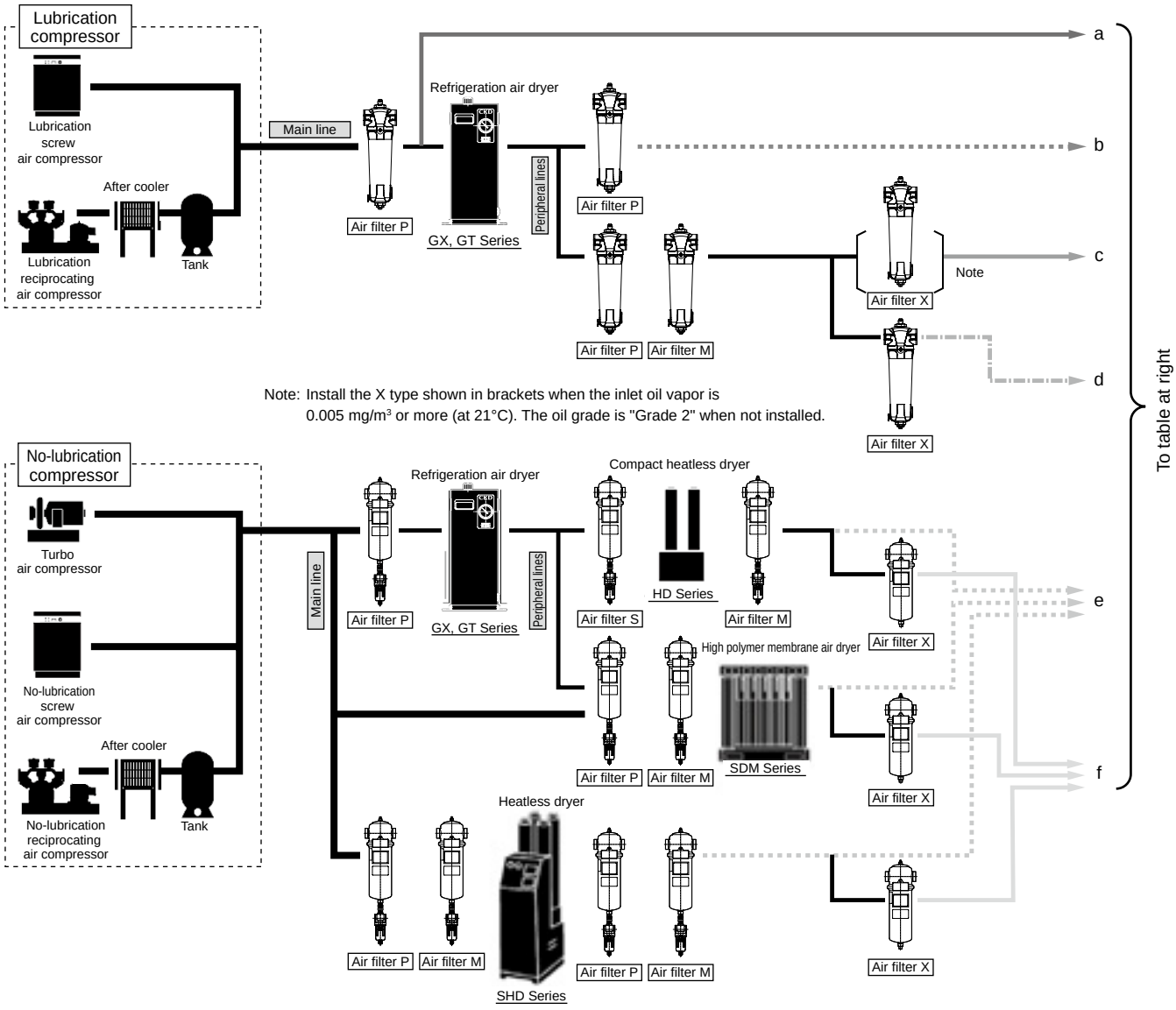

JIS B 8392-1:2012 Compressed air purity grade

Grade	Solid particles				Humidity and moisture		Oil
	Max. number of particles per 1 m³ for particle diameter d (μm)			Mass concentration Cp	Pressure dew point	Water concentration Cw	Total oil concentration
	0.1 < d ≤ 0.5	0.5 < d ≤ 1.0	1.0 < d ≤ 5.0	mg/m³	°C	g/m³	mg/m³
0	Conditions stricter than Grade 1 to be specified by user or supplier.						
1	≤ 20,000	≤ 400	≤ 10	-	≤ -70	-	≤ 0.01
2	≤ 400,000	≤ 6,000	≤ 100	-	≤ -40	-	≤ 0.1
3	-	≤ 90,000	≤ 1,000	-	≤ -20	-	≤ 1
4	-	-	≤ 10,000	-	≤ +3	-	≤ 5
5	-	-	≤ 100,000	-	≤ +7	-	-
6	-	-	-	0 < Cp ≤ 5	≤ +10	-	-
7	-	-	-	5 < Cp ≤ 10	-	Cw ≤ 0.5	-
8	-	-	-	-	-	0.5 < Cw ≤ 5	-
9	-	-	-	-	-	5 < Cw ≤ 10	-
X	-	-	-	Cp > 10	-	Cw > 10	> 5

JIS B 8392-1:2003 has been revised to JIS B 8392-1:2012.

For example,
What is Grade 1:2:1?

- Solid particles 0.1 to 0.5 μm are 20,000 particles or less, 0.5 to 1.0 μm are 400 particles or less, and 1.0 to 5.0 μm are 10 particles or less
- Pressure dew point -40°C or less
- Oil concentration 0.01 mg/m³ or less.

	Air quality	Applications	Grade
a	Water drip removal air/ coarse dust removal air	For construction/civil engineering machinery Air for cleaning (dry air not required)	2.-.-
b	General dry air	Standard pneumatic components, standard pneumatic tools, labor saving components, jigs and tools for air, air chucks, air vices, air for cleaning precision components	2.6.3 2.5.3
c	Dry air (oil-free)	For instrumentation, for measurement, sequence control, high-grade paint	1.6.1 1.5.1
d	Dry air (odorless)	Food product industry (where air is not directly blown onto food), pharmaceutical industry, for stirring/transporting/drying/packaging/brewing	1.6.1 1.5.1
e	Ultra dry air (oil-free)	Ozone generator, powder transfer, drying of atmospheric gas for furnaces, drying of high-voltage generator insulation gas, drying of computer rooms, for centralized control instruments	1.3.1 1.2.1 1.2.1
f	Ultra dry air (odorless)	Food product industry (where air is not directly blown onto food), pharmaceutical industry, for stirring/transporting/drying/packaging/brewing	1.3.1 1.2.1 1.2.1

■Table of system selections

Rating (ambient temperature: 32°C, inlet temperature: 40°C, pressure dew point: 10°C)

Air compressor		Refrigeration air dryer		Main line filter P type (1 or 3 μm)	Main line filter M type (0.01 μm)	Main line filter X type (deodorizing)
Output kW	Standard processing air rate m^3/min (ANR)	Air cooling	Water cooling			
75	10.4/12.3	GT9075D	GT9075WD	AF2-13P50A AF4013S-50	AF2-13M50A AF4013M-50	AF2-13X50A AF4013X-50
90	14.8/17.5	GT9090D	GT9090WD	AF2-20P65A AF4020S-50	AF2-24M50A AF4020M-50	AF2-20X50A AF4020X-50
120	18.7/22.0	GT9120D	GT9120WD	AF2-24P65A	AF2-24M-65A	AF2-24X65A
150	23.8/28.0	GT9150D	GT9150WD	AF5032P-80	AF5032M-80	AF5032X-80
190	27.5/32.4	GT9190D	GT9190WD	AF5048P-100	AF5048M-100	AF5048X-100
240	36.5/43.0	GT9240	GT9240W	AF5048P-100	AF5048M-100	AF5048X-100
300	44.2/52.0	GT9300	GT9300W	AF5064P-100	AF5064M-100	AF5064X-100
380	55.2/65.0	GT9380	GT9380W	AF5080P-150	AF5080M-150	AF5080X-150
450	70.3/82.8	GT9450	GT9450W	AF5096P-150	AF5096M-150	AF5096X-150
710	139.1	—	GT9710WV2	AF5160P-200	AF5160M-200	AF5160X-200
960	184.2	—	GT9960WV2	AF5192P-200	AF5192M-200	AF5192X-200



Refrigerated air dryer Xeroaqua Air cooling

GT9000(D) Series

For direct air compressor connection, standard inlet air

Applicable air compressor: 75, 90, 120, 150, 190, 240, 300, 380, 450 kW

JIS symbol

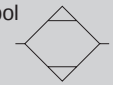

CAD

Specifications

1 MPa ≈ 145.0 psi, 1 MPa = 10 bar

Model No.			GT9075D	GT9090D	GT9120D	GT9150D	GT9190D	GT9240	GT9300	GT9380	GT9450
Applicable air compressor		kW	75	90	120	150	190	240	300	380	450
Working range	Working fluid		Compressed air								
	Inlet air temperature	°C	5 (41°F) to 60 (140°F)								
	Inlet air pressure	MPa	0.29 (≈43 psi, 3 bar) to 0.98 (≈142 psi, 9 bar)					0.1 (≈15 psi, 1 bar) to 0.98 (≈142 psi, 9 bar)	0.29 (≈43 psi, 3 bar) to 0.93 (≈134 psi, 9 bar)		
	Ambient temperature	°C	2 (35°F) to 48 (118°F)					2 (35°F) to 40 (104°F)			
Rating	Processing air rate 50/60 Hz (*2)	m^3/min (ANR)	11.4/12.6	16.3/18.9	20.8/23.8	25.9/30.1	32.1/38.1	36.5/43.0	44.2/52.0	55.2/65.0	70.3/82.8
	Processing air rate (Compressor intake condition) 50/60 Hz (*3)	m^3/min	12.1/13.4	17.3/20.1	22.1/25.3	27.5/32.0	34.1/40.5	38.3/45.2	46.4/54.6	58.0/68.3	73.8/87.0
	Inlet air temperature	°C	40 (104°F)								
	Inlet air pressure	MPa	0.7 (≈101 psi, 7 bar)								
	Ambient temperature	°C	32 (89°F)								
Performance	Outlet air pressure dew point	°C	10 (50°F) (*4)								
Power supply			Three-phase 200/200, 220 VAC 50/60 Hz								
Electrical specifications	Power consumption 50/60 Hz (*5)	kW	2.5/3.0, 3.0	3.0/3.9, 3.9	3.0/3.9, 3.9	4.1/5.2, 5.2	5.7/7.5, 7.4	4.6/5.7, 5.6	5.9/6.8, 6.8	8.6/10.1, 10.0	9.3/11.2, 11.9
	Current consumption 50/60 Hz (*5)	A	9.5/9.5, 9.4	11.5/12.0, 12.0	11.5/12.0, 12.0	14.0/16.5, 15.5	20.5/24.5, 22.5	17.9/19.2, 19.1	19.9/22.3, 21.2	26.4/29.4, 28.9	36.3/38.3, 38.2
	Starting current 50/60 Hz	A	110/100	110/115	110/115	140/155	165/190	135/135	83/77	98/91	135/135
Refrigerant			R-410A					R-407C			
Air inlet and outlet port size (*6)			R2	R2	Flange 2 $^1/_2$B	Flange 3B		Flange 4B	Flange 5B		Flange 6B
Weight		kg	146	186	205	279	286	555	790	870	970
Released heat		kW 50/60 Hz	8.4/9.4	11.3/13.2	13.6/15.7	17.2/20.2	21.7/25.9	18.8/22.1	20.8/24.5	26.7/31.3	33.0/39.0

*1: Outer panel: Quality Cool White (Munsell No. 5GY7.5/0.5)
Base: Munsell No. N3.0
*2: ANR shows conditions of 20°C atmospheric pressure and relative humidity 65%.
*3: This is a value converted to the intake condition of the air compressor in an environment of 32°C with a relative humidity of 75%.
*4: Contact CKD for information on the dew point performance guarantee.
*5: The power consumption and current consumption are both reference values under the rated conditions, and are not guaranteed.
*6: The flange is JIS 10K FF or equivalent.

How to order (air-cooling)

GT9 075D - G - AC380V

- Ⓐ Capacity category
- Ⓑ Option *1
- Ⓒ Voltage *2

Code	Description
Ⓐ Capacity category	
075D	75 kW
090D	90 kW
120D	120 kW
150D	150 kW
190D	190 kW
240	240 kW
300	300 kW
380	380 kW
450	450 kW
Ⓑ Option	
Blank	Standard products
G	Different voltage compatible
H2	SUS nameplate
H3	Simple export packaging *3
N1	Copper tube rust proof coating
Q1	Drain piping right (GT9075D to GT9190D only)
Ⓒ Voltage	
200 VAC	
220 VAC (60Hz only standard)	
230 VAC	
240 VAC	
380 VAC	
400 VAC	
415 VAC	
440 VAC	
480 VAC	

Precautions for model No. selection

*1: Indicate options in alphabetical order.
*2: Specify the voltage for item Ⓒ even when the model is a standard product.
Example: GT9090D-AC200V
*3: Option H3 is packaged in plywood.
*4: The instruction manual and nameplates are provided in Japanese and English. However, the proof pressure certificate (GT9240 and higher) is available as Japanese text only. Contact CKD when an English version is required.
*5: Contact CKD if a photo of the completed product is required.
*6: Contact CKD to designate the color of the body panel.

Selection guide (GT9075D to 9190D)

(1) Temperature compensation coefficient

GT9075D, GT9090D, GT9120D

Inlet air temperature (°C)		35			40			45			50			55			60		
Pressure dew point (°C)		5	10	15	5	10	15	5	10	15	5	10	15	5	10	15	5	10	15
Ambient temperature (°C)	25	0.77	1.15	1.15	0.65	1.06	1.15	0.53	0.88	0.95	0.39	0.71	0.80	0.25	0.61	0.71	0.13	0.51	0.62
	30	0.70	1.15	1.15	0.58	1.02	1.11	0.47	0.85	0.93	0.35	0.68	0.75	0.23	0.59	0.66	0.11	0.49	0.58
	32	0.68	1.15	1.15	0.57	1.00	1.09	0.46	0.83	0.90	0.34	0.67	0.72	0.22	0.58	0.65	0.10	0.48	0.55
	35	0.65	1.12	1.15	0.54	0.95	1.04	0.44	0.79	0.85	0.32	0.64	0.70	0.21	0.55	0.64	0.10	0.46	0.53
	40	0.57	0.98	1.07	0.48	0.83	0.90	0.39	0.69	0.74	0.29	0.56	0.63	0.19	0.48	0.54	0.09	0.40	0.48
	45	0.23	0.83	0.92	0.20	0.70	0.85	0.15	0.58	0.68	0.14	0.47	0.56	0.14	0.41	0.44	0.08	0.34	0.42
	48	0.19	0.73	0.89	0.17	0.62	0.80	0.12	0.51	0.65	0.11	0.42	0.50	0.11	0.36	0.36	0.07	0.30	0.35

GT9150D

Inlet air temperature (°C)		35			40			45			50			55			60		
Pressure dew point (°C)		5	10	15	5	10	15	5	10	15	5	10	15	5	10	15	5	10	15
Ambient temperature (°C)	25	0.77	1.15	1.15	0.65	1.06	1.15	0.53	0.88	0.95	0.39	0.71	0.80	0.25	0.61	0.71	0.13	0.51	0.62
	30	0.70	1.15	1.15	0.58	1.02	1.11	0.47	0.85	0.93	0.35	0.68	0.75	0.23	0.59	0.66	0.11	0.49	0.58
	32	0.68	1.15	1.15	0.57	1.00	1.09	0.46	0.83	0.90	0.34	0.67	0.72	0.22	0.58	0.65	0.10	0.48	0.55
	35	0.65	1.12	1.15	0.54	0.95	1.04	0.44	0.79	0.85	0.32	0.64	0.70	0.21	0.55	0.64	0.10	0.46	0.53
	40	0.57	0.98	1.07	0.48	0.83	0.90	0.39	0.69	0.74	0.29	0.56	0.63	0.19	0.48	0.54	0.09	0.40	0.48
	45	0.22	0.79	0.88	0.17	0.58	0.70	0.14	0.50	0.59	0.13	0.45	0.54	0.13	0.38	0.41	0.08	0.33	0.38
	48	0.17	0.65	0.79	0.13	0.48	0.62	0.10	0.40	0.51	0.09	0.35	0.42	0.09	0.31	0.35	0.07	0.27	0.32

GT9190D

Inlet air temperature (°C)		35			40			45			50			55			60		
Pressure dew point (°C)		5	10	15	5	10	15	5	10	15	5	10	15	5	10	15	5	10	15
Ambient temperature (°C)	25	0.77	1.15	1.15	0.65	1.06	1.15	0.53	0.88	0.95	0.39	0.71	0.80	0.25	0.61	0.71	0.13	0.51	0.62
	30	0.70	1.15	1.15	0.58	1.02	1.11	0.47	0.85	0.93	0.35	0.68	0.75	0.23	0.59	0.66	0.11	0.49	0.58
	32	0.68	1.15	1.15	0.57	1.00	1.09	0.46	0.83	0.90	0.34	0.67	0.72	0.22	0.58	0.65	0.10	0.48	0.55
	35	0.65	1.12	1.15	0.54	0.95	1.04	0.44	0.79	0.85	0.32	0.64	0.70	0.21	0.55	0.64	0.10	0.46	0.53
	40	0.57	0.98	1.07	0.48	0.83	0.90	0.39	0.69	0.74	0.29	0.56	0.63	0.19	0.48	0.54	0.09	0.40	0.48
	45	0.23	0.83	0.92	0.20	0.70	0.85	0.15	0.58	0.68	0.14	0.47	0.56	0.14	0.41	0.44	0.08	0.34	0.42
	48	0.17	0.65	0.79	0.13	0.48	0.62	0.10	0.40	0.51	0.09	0.35	0.42	0.09	0.31	0.35	0.07	0.27	0.32

(2) Inlet air pressure coefficient

Inlet air pressure (MPa)	0.29	0.30	0.40	0.50	0.60	0.70	0.80	0.90	0.98
Coefficient	0.80	0.80	0.86	0.92	0.96	1.00	1.04	1.08	1.12

(3) Ceiling coefficient

Working conditions (inlet air pressure (MPa))	0.29	0.30	0.40	0.50	0.60	0.70	0.80	0.90	0.98
Coefficient	0.92	0.92	0.98	1.05	1.10	1.15	1.19	1.24	1.28

When determining the appropriate model from the reference processing air rate of each model No.
Reference processing air rate × (1) Temperature correction coefficient × (2) Inlet air pressure coefficient = Maximum processing air rate
*1: Select with conditions where the value of the product of each coefficient ((1)×(2)) does not exceed the upper limit coefficient of (3).

Conditions	Working conditions	Selecting conditions	Coefficient
Inlet air temperature	30 to 38°C	40°C	(1) 0.95
Pressure dew point	10°C	10°C	
Ambient temperature	25 to 33°C	35°C	
Inlet air pressure	0.55 to 0.75 MPa	0.5 MPa	(2) 0.92
Frequency	50 Hz	50 Hz	50 Hz

Substitute the above conditions into the equation above to obtain the processing air rate when using GT9150D.
Product of each coefficient
(1) × (2) = 0.95 × 0.92 = 0.87
As the (3) ceiling coefficient of 1.05, when the inlet air pressure of the working conditions is 0.5 MPa, is not exceeded, the max. processing air rate will be 25.9 (reference processing air rate) × 0.87 = 22.5 m^3/min (ANR).
If the used air quantity is less than or equal to this value, select that model.

Selection guide (GT9240 to GT9450)

(1) Temperature compensation coefficient

Inlet air temperature (°C)		35		40		45		50		55		60	
Pressure dew point (°C)		10	15	10	15	10	15	10	15	10	15	10	15
Ambient temperature (°C)	25	1.29	1.29	1.14	1.24	0.91	0.99	0.69	0.75	0.46	0.50	0.23	0.25
	30	1.25	1.29	1.04	1.13	0.83	0.91	0.62	0.68	0.42	0.45	0.21	0.23
	32	1.20	1.29	1.00	1.09	0.80	0.87	0.60	0.65	0.40	0.44	0.20	0.22
	35	1.13	1.23	0.94	1.02	0.75	0.82	0.56	0.61	0.38	0.41	0.19	0.20
	40	1.01	1.10	0.84	0.92	0.67	0.73	0.50	0.55	0.34	0.37	0.17	0.18

(2) Inlet air pressure coefficient

Inlet air pressure (MPa)	0.10	0.20	0.29	0.30	0.40	0.50	0.60	0.70	0.80	0.90	0.93	0.98
Coefficient	0.60	0.66	0.72	0.73	0.80	0.87	0.93	1.00	1.07	1.13	1.15	1.19

*1:GT9300 to GT9450 working pressure is 0.29 to 0.93MPa.

(3) Ceiling coefficient

Working conditions (inlet air pressure (MPa))	0.10	0.20	0.29	0.30	0.40	0.50	0.60	0.70	0.80	0.90	0.93	0.98
Coefficient	0.77	0.85	0.92	0.94	1.03	1.12	1.19	1.29	1.38	1.45	1.48	1.53

When determining the appropriate model from the reference processing air rate of each model No.
Reference processing air rate × (1) Temperature correction coefficient × (2) Inlet air pressure coefficient = Maximum processing air rate
*2: Select with conditions where the value of the product of each coefficient ((1)×(2)) does not exceed the upper limit coefficient of .

Conditions	Working conditions	Selecting conditions	Coefficient
Inlet air temperature	30 to 38°C	40°C	(1) 0.94
Pressure dew point	10°C	10°C	
Ambient temperature	25 to 33°C	35°C	
Inlet air pressure	0.55 to 0.75 MPa	0.5 MPa	(2) 0.87
Frequency	50Hz	50Hz	50Hz

Substitute the above conditions into the equation above to obtain the processing air rate when using the GT9240.
Product of each coefficient
(1)×2= 0.94 ×087 = 0.81
As the ceiling coefficient of 1.12 at the inlet air pressure 0.5MPa (use conditions) is not exceeded, the maximum processing air rate will be 23.8 (reference processing air rate) ×0.81=19.2m^3/min (ANR).
If the used air quantity is less than or equal to this value, select that model.
*3: For compatibility with pressure dew points of less than 10°C, contact CKD separately.

Dimensions CAD

● GT9075D, GT9090D

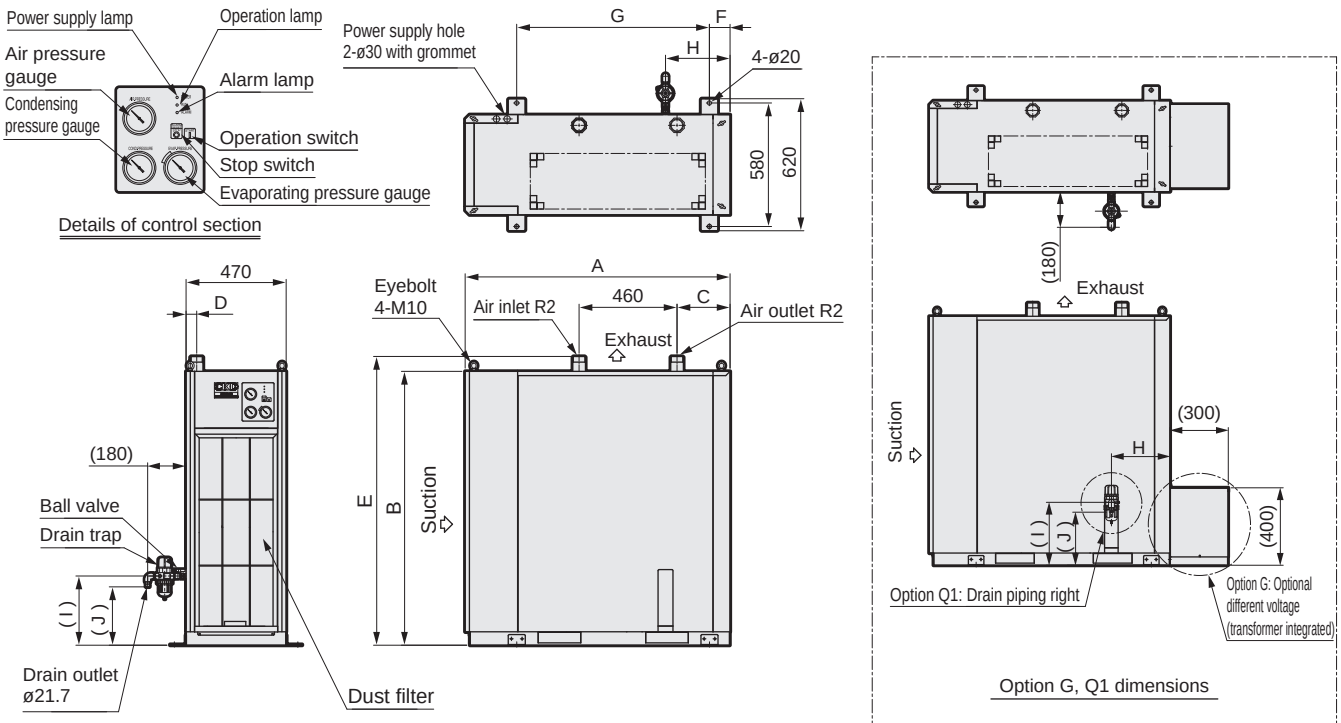

*1: The drain trap and ball valve are included.

Model No.	A	B	C	D	E	F	G	H	I	J
GT9075D	1081	1140	287	235	1204	67	868	287	320	269
GT9090D	1244	1286	249	55	1356	97	905	303	325	274

● GT9120D, GT9150D, GT9190D

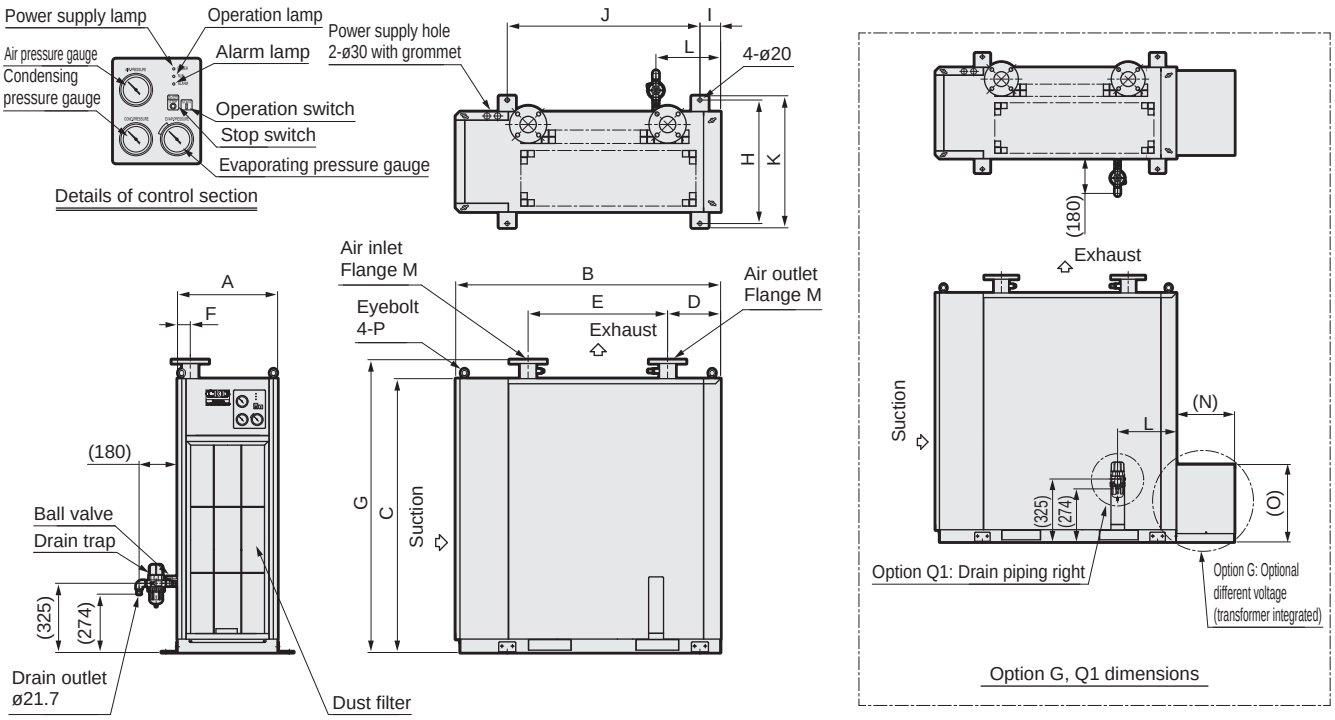

*1: The drain trap and ball valve are included.

Model No.	A	B	C	D	E	F	G	H	I	J	K	L	M	N	O	P
GT9120D	470	1244	1286	249	655	60	1375	580	97	905	620	303	2 1/2B	300	400	M10
GT9150D	700	1290	1332	305	720	225	1432	810	67	1030	850	325	3B	350	420	M16
GT9190D	700	1290	1332	107	860	225	1432	810	67	1030	850	325	3B	350	420	M16

Dimensions

● GT9240

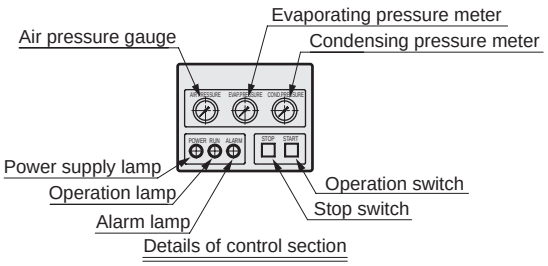

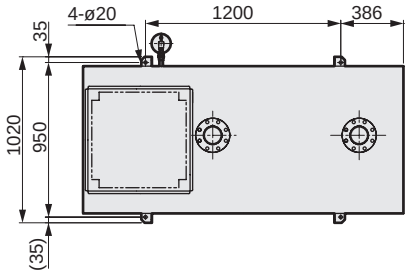

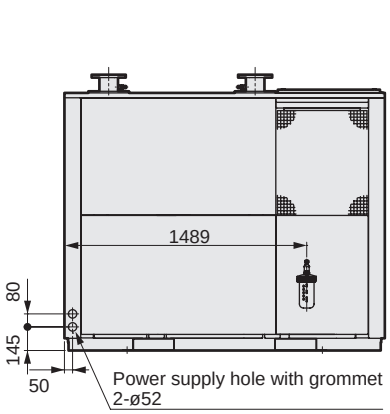

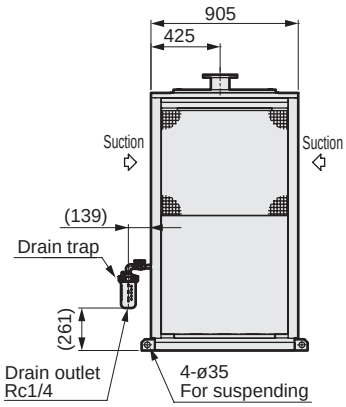

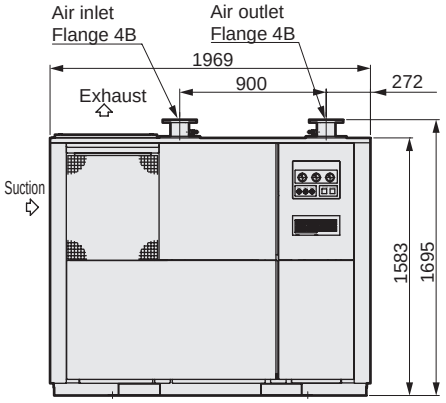

● GT9300,GT9380

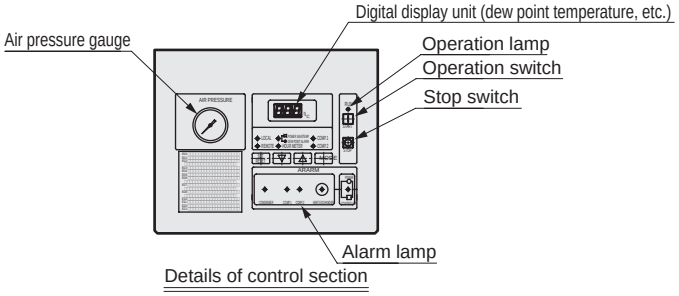

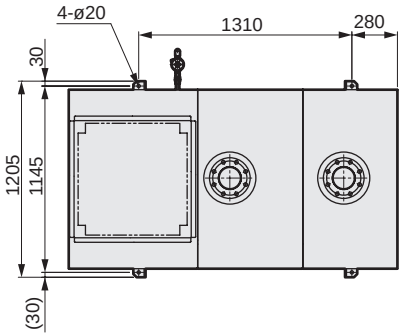

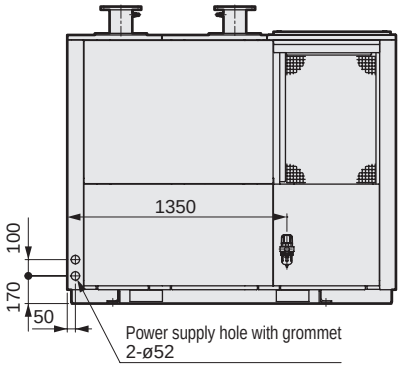

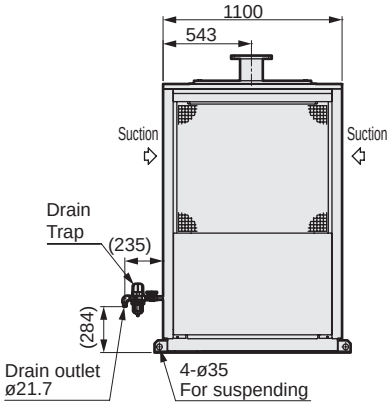

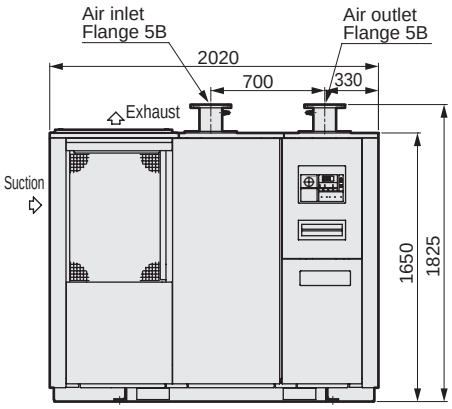

*1: The dew point display value is a guide, and is not the actual dew point.
To measure the actual dew point, measure the secondary side air with a dew point gauge.

Dimensions

● GT9450

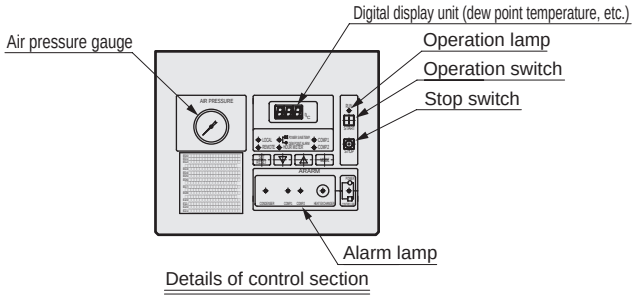

Details of control section

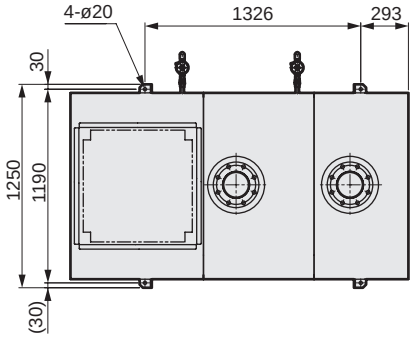

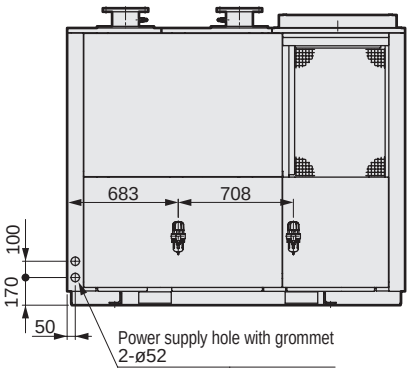

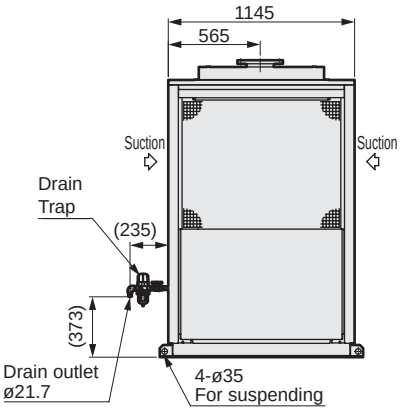

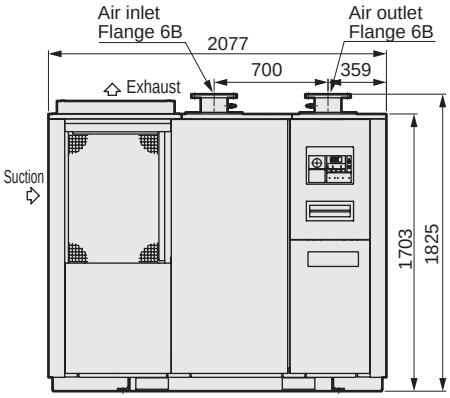

*1: The dew point display value is a guide, and is not the actual dew point.
To measure the actual dew point, measure the secondary side air with a dew point gauge.

MEMO



Refrigerated air dryer Xeroaqua Water cooling type

GT9000W(D) Series

For direct air compressor connection, standard inlet air

Applicable air compressor: 75, 90, 120, 150, 190, 240, 300, 380, 450 kW

JIS symbol

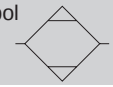

CAD

Specifications

1 MPa ≈ 145.0 psi, 1 MPa = 10 bar

Model No.		GT9075WD	GT9090WD	GT9120WD	GT9150WD	GT9190WD	GT9240W	GT9300W	GT9380W	GT9450W
Applicable air compressor	kW	75	90	120	150	190	240	300	380	450
Working range	Working fluid	Compressed air								
	Inlet air temperature °C	5 (41°F) to 60 (140°F)								
	Inlet air pressure MPa	0.29 (≈43 psi, 3 bar) to 0.98 (≈142 psi, 9 bar)					0.1 (≈15 psi, 1 bar) to 0.98 (≈142 psi, 9 bar)	0.29 (≈43 psi, 3 bar) to 0.93 (≈134 psi, 9 bar)		
	Cooling water inlet pressure MPa	0.2 (≈29 psi, 2 bar) to 0.74 (≈107 psi, 7 bar)								
	Ambient temperature °C	2 (35°F) to 48 (118°F)					2 (35°F) to 45 (113°F)			
Rating	Processing air rate m^3/min (ANR) 50/60 Hz (*2)	11.4/13.2	16.3/18.9	20.8/23.8	25.9/30.1	32.9/38.6	39.9/47.0	48.4/57.0	60.3/71.0	79.0/93.0
	Processing air rate m^3/min (Compressor intake condition) 50/60 Hz (*3)	12.1/14.0	17.3/20.1	22.1/25.3	27.5/32.0	35.0/41.0	41.9/49.4	50.8/59.9	63.3/74.6	83.0/97.7
	Inlet air temperature °C	40 (104°F)								
	Inlet air pressure MPa	0.7 (≈101 psi, 7 bar)								
	Cooling water inlet temperature °C	32 (89°F)								
	Cooling water volume m^3/h 50/60 Hz	1.5/1.7	2.4/2.8	2.5/2.9	2.7/3.0	3.0/3.2	3.6/3.8	3.4/4.0	4.3/5.0	6.0/7.1
	Ambient temperature °C	32 (89°F)								
Performance	Outlet air pressure dew point °C	10 (50°F) (*4)								
Power supply		Three-phase 200/200, 220 VAC 50/60 Hz								
Electrical specifications	Power consumption kW 50/60 Hz (*5)	1.7/2.0, 2.0	2.1/2.6, 2.5	2.1/2.6, 2.5	3.5/4.2, 4.2	4.7/6.2, 6.1	3.5/4.4, 4.3	5.1/5.7, 5.7	6.5/7.6, 7.5	8.5/9.0, 8.9
	Current consumption A 50/60 Hz (*5)	8.0/8.0, 8.0	8.6/9.4, 8.9	8.6/9.4, 8.9	11.5/12.0, 11.0	15.5/17.0, 16.0	14.8/15.0, 14.9	17.6/18.9, 18.4	22.5/25.0, 24.5	29.6/32.0, 31.4
	Starting current A 50/60 Hz	110/100	110/115	110/115	140/155	165/190	135/135	83/77	98/91	135/135
Refrigerant		R-410A					R-407C			
Air inlet and outlet port size (*6)		R2	R2	Flange 2 $^1/_2$B	Flange 3B		Flange 4B	Flange 5B		Flange 6B
Weight	kg	140	183	203	270	277	532	790	870	940

*1: Outer panel: Quality Cool White (Munsell No. 5GY7.5/0.5)
Base: Munsell No. N3.0

*2: ANR shows conditions of 20°C atmospheric pressure and relative humidity 65%.

*3: This is a value converted to the intake condition of the air compressor in an environment of 32°C with a relative humidity of 75%.

*4: Contact CKD for information on the dew point performance guarantee.

*5: The power consumption and current consumption are both reference values under the rated conditions, and are not guaranteed.

*6: The flange is JIS 10K FF or equivalent.

How to order (water-cooling)

GT9 075WD - G - AC380V

Ⓐ Capacity category

Ⓑ Option *1

Ⓒ Voltage *2

Code	Description
Ⓐ Capacity category	
075WD	75 kW
090WD	90 kW
120WD	120 kW
150WD	150 kW
190WD	190 kW
240W	240 kW
300W	300 kW
380W	380 kW
450W	450 kW
Ⓑ Option	
Blank	Standard products
G	Different voltage compatible
H2	SUS nameplate
H3	Simple export packaging *3
N1	Copper tube rust proof coating
Q1	Drain piping right (GT9075WD to GT9190WD only)
Ⓒ Voltage	
200 VAC	
220 VAC (60Hz only standard)	
230 VAC	
240 VAC	
380 VAC	
400 VAC	
415 VAC	
440 VAC	
480 VAC	

Precautions for model No. selection

*1: Indicate options in alphabetical order.
*2: Specify the voltage for item Ⓒ even when the model is a standard product.
Example: GT9090WD-AC200V
*3: Option H3 is packaged in plywood.
*4: The instruction manual and nameplates are provided in Japanese and English. However, the proof pressure certificate (GT9240W and higher) is available as Japanese text only. Contact CKD when an English version is required.
*5: Contact CKD if a photo of the completed product is required.
*6: Contact CKD to designate the color of the body panel.

Selection guide (GT9075WD to 9190WD)

(1) Temperature compensation coefficient

GT9075WD, GT9090WD, GT9120WD

Inlet air temperature (°C)	35			40			45			50			55			60		
Pressure dew point (°C)	5	10	15	5	10	15	5	10	15	5	10	15	5	10	15	5	10	15
Coefficient	0.68	1.15	1.15	0.57	1.00	1.09	0.46	0.83	0.90	0.34	0.67	0.72	0.22	0.58	0.65	0.10	0.48	0.55

GT9150WD

Inlet air temperature (°C)	35			40			45			50			55			60		
Pressure dew point (°C)	5	10	15	5	10	15	5	10	15	5	10	15	5	10	15	5	10	15
Coefficient	0.68	1.15	1.15	0.57	1.00	1.09	0.46	0.83	0.90	0.34	0.67	0.72	0.22	0.58	0.65	0.10	0.48	0.55

GT9190WD

Inlet air temperature (°C)	35			40			45			50			55			60		
Pressure dew point (°C)	5	10	15	5	10	15	5	10	15	5	10	15	5	10	15	5	10	15
Coefficient	0.68	1.15	1.15	0.57	1.00	1.09	0.46	0.83	0.90	0.34	0.67	0.72	0.22	0.58	0.65	0.10	0.48	0.55

(2) Inlet air pressure coefficient

Inlet air pressure (MPa)	0.29	0.30	0.40	0.50	0.60	0.70	0.80	0.90	0.98
Coefficient	0.80	0.80	0.86	0.92	0.96	1.00	1.04	1.08	1.12

(3) Ceiling coefficient

Working conditions (inlet air pressure (MPa))	0.29	0.30	0.40	0.50	0.60	0.70	0.80	0.90	0.98
Coefficient	0.92	0.92	0.98	1.05	1.10	1.15	1.19	1.24	1.28

When determining the appropriate model from the reference processing air rate of each model No.
Reference processing air rate × (1) Temperature correction coefficient × (2) Inlet air pressure coefficient = Maximum processing air rate
*1: Select with conditions where the value of the product of each coefficient ((1)×(2)) does not exceed the upper limit coefficient of (3).

Conditions	Working conditions	Selecting conditions	Coefficient
Inlet air temperature	30 to 33°C	35°C	(1) 1.15
Pressure dew point	10°C	10°C	
Inlet air pressure	0.55 to 0.75 MPa	0.5 MPa	(2) 0.92
Frequency	50 Hz	50 Hz	50 Hz

Substitute the above conditions into the equation above to obtain the processing air rate when using GT9150WD.
Product of each coefficient
(1) × (2) = 1.15 × 0.92 = 1.05
As the (3) ceiling coefficient of 1.05, when the inlet air pressure of the working conditions is 0.5 MPa, is not exceeded, the max. processing air rate will be 25.9 (reference processing air rate) × 1.05 = 27.1 m^3/min (ANR).
If the used air quantity is less than or equal to this value, select that model.

Selection guide (GT9240W to GT9450W)

(1) Temperature compensation coefficient

Inlet air temperature (°C)	35		40		45	
Pressure dew point (°C)	10	15	10	15	10	15
Coefficient	1.20	1.29	1.00	1.09	0.80	0.87
Inlet air temperature (°C)	**50**		**55**		**60**	
Pressure dew point (°C)	**10**	**15**	**10**	**15**	**10**	**15**
Coefficient	0.60	0.65	0.40	0.44	0.20	0.22

(2) Inlet air pressure coefficient

Inlet air pressure (MPa)	0.10	0.20	0.29	0.30	0.40	0.50	0.60	0.70	0.80	0.90	0.93	0.98
Coefficient	0.60	0.66	0.72	0.73	0.80	0.87	0.93	1.00	1.07	1.13	1.15	1.19

*1:GT9300W to GT9450W working pressure is 0.29 to 0.93MPa.

(3) Ceiling coefficient

Working conditions (inlet air pressure (MPa))	0.10	0.20	0.29	0.30	0.40	0.50	0.60	0.70	0.80	0.90	0.93	0.98
Coefficient	0.77	0.85	0.92	0.94	1.03	1.12	1.19	1.29	1.38	1.45	1.48	1.53

When determining the appropriate model from the reference processing air rate of each model No.
Reference processing air rate × (1) Temperature correction coefficient × (2) Inlet air pressure coefficient = Maximum processing air rate
*2: Select with conditions where the value of the product of each coefficient ((1)×(2)) does not exceed the upper limit coefficient of.

Conditions	Working conditions	Selecting conditions	Coefficient
Inlet air temperature	30 to 33°C	35°C	(1) 1.20
Pressure dew point	10°C	10°C	
Inlet air pressure	0.55 to 0.75 MPa	0.5 MPa	(2) 0.87
Frequency	50Hz	50Hz	50Hz

Substitute the above conditions into the equation above to obtain the processing air rate when using the GT9240W.
Product of each coefficient
(1) × (2) = 1.20 × 0.87 = 1.04
As the ceiling coefficient of 1.12 at the inlet air pressure 0.5MPa (use conditions) is not exceeded, the maximum processing air rate will be 39.9 (reference processing air rate) ×1.04=41.4m^3/min (ANR).
If the used air quantity is less than or equal to this value, select that model.
*3: For compatibility with pressure dew points of less than 10°C, contact CKD separately.

Dimensions CAD

● GT9075WD, GT9090WD

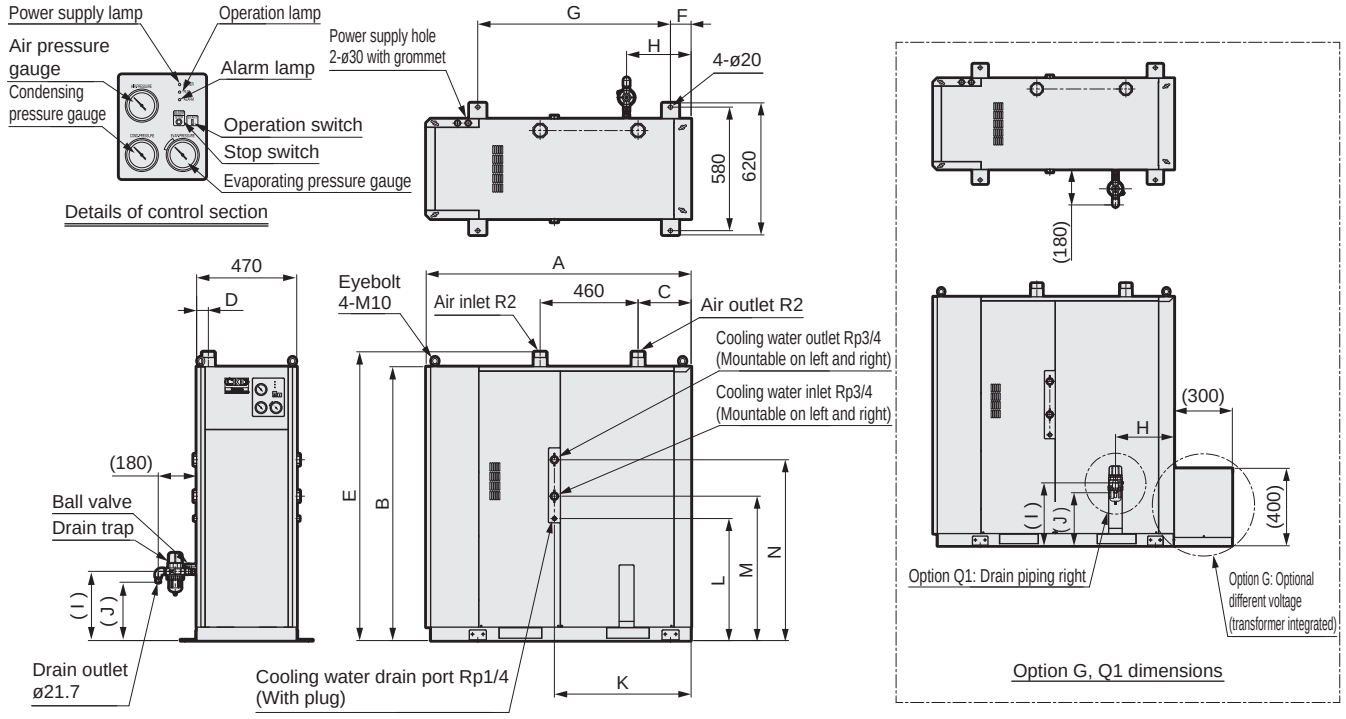

*1: The drain trap and ball valve are included.
*2: Select either the right or left panel for installation of the cooling water piping. The installation position will be symmetrical on both the right and left side panels.

Model No.	A	B	C	D	E	F	G	H	I	J	K	L	M	N
GT9075WD	1081	1140	287	235	1204	67	868	287	320	269	486	505	665	778
GT9090WD	1244	1286	249	55	1356	97	905	303	325	274	642	573	678	849

● GT9120WD, GT9150WD, GT9190WD

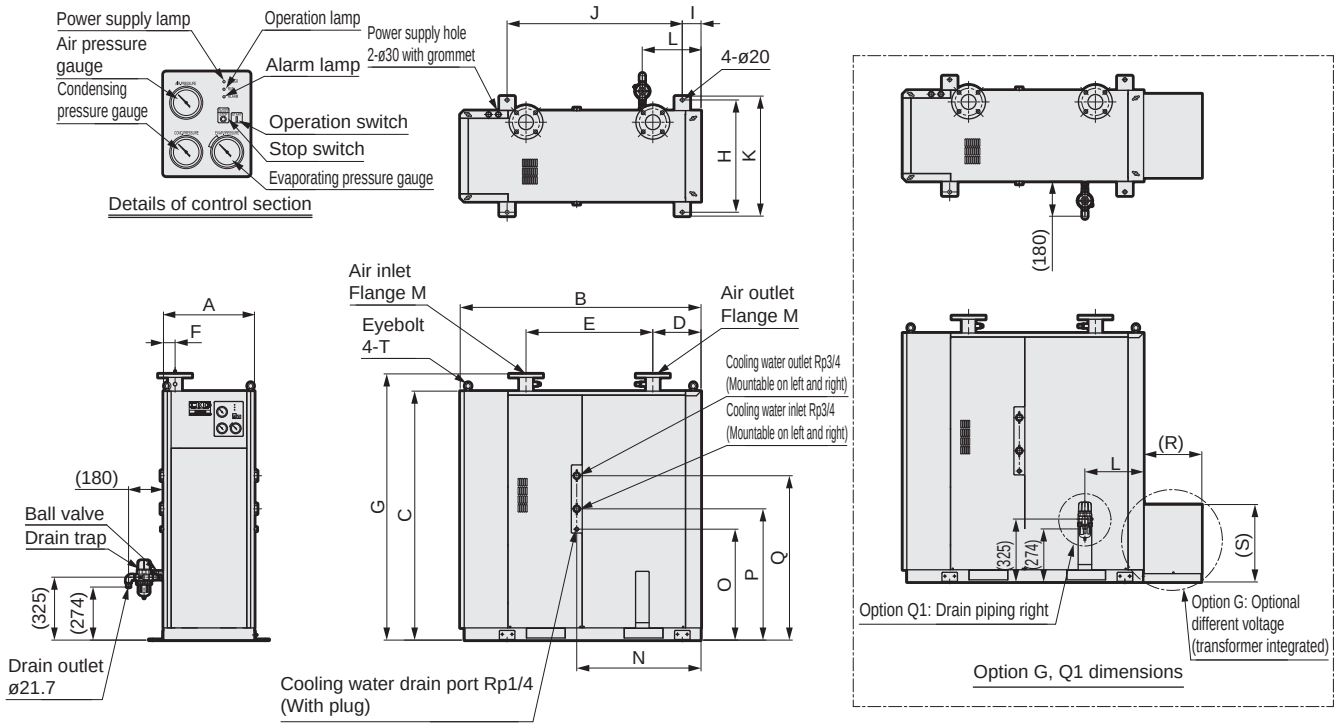

*1: The drain trap and ball valve are included.
*2: Select either the right or left panel for installation of the cooling water piping. The installation position will be symmetrical on both the right and left side panels.

Model No.	A	B	C	D	E	F	G	H	I	J	K	L	M	N	O	P	Q	R	S	T
GT9120WD	470	1244	1286	249	655	60	1375	580	97	905	620	303	$2\,^{1}/_{2}$B	642	573	678	849	300	400	M10
GT9150WD	700	1290	1332	305	720	225	1432	810	67	1030	850	325	3B	1000	120	190	563	350	420	M16
GT9190WD	700	1290	1332	107	860	225	1432	810	67	1030	850	325	3B	1000	120	190	563	350	420	M16

Dimensions

● GT9240W

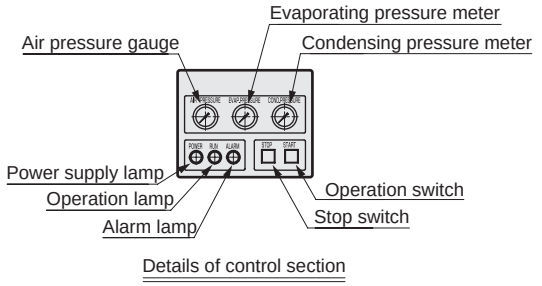

Details of control section

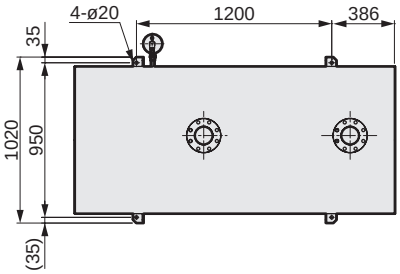

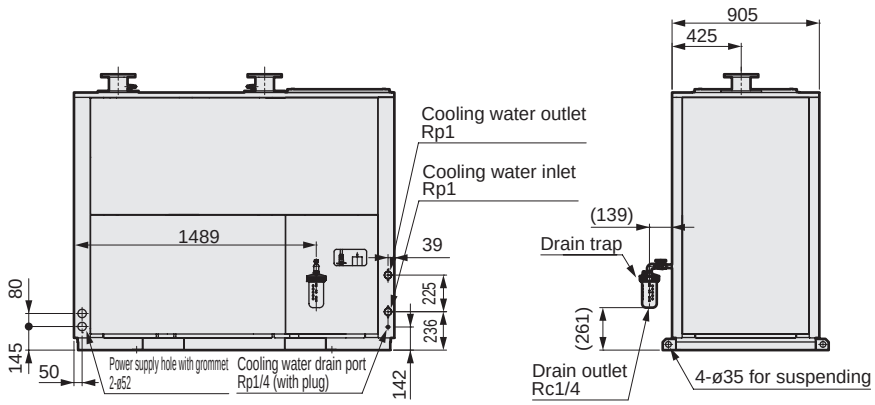

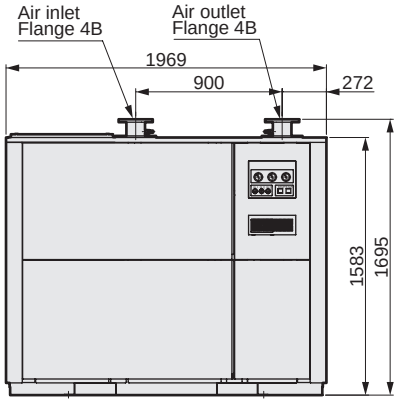

● GT9300W, GT9380W

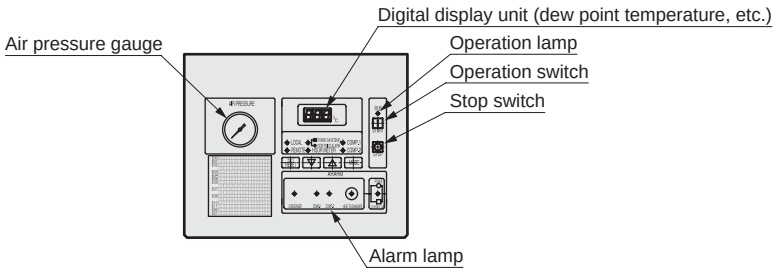

Details of control section

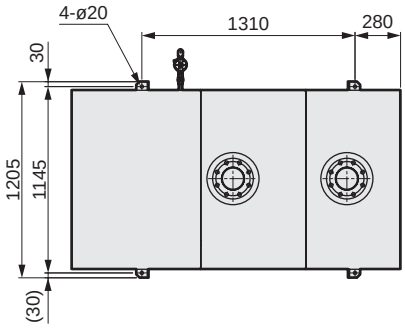

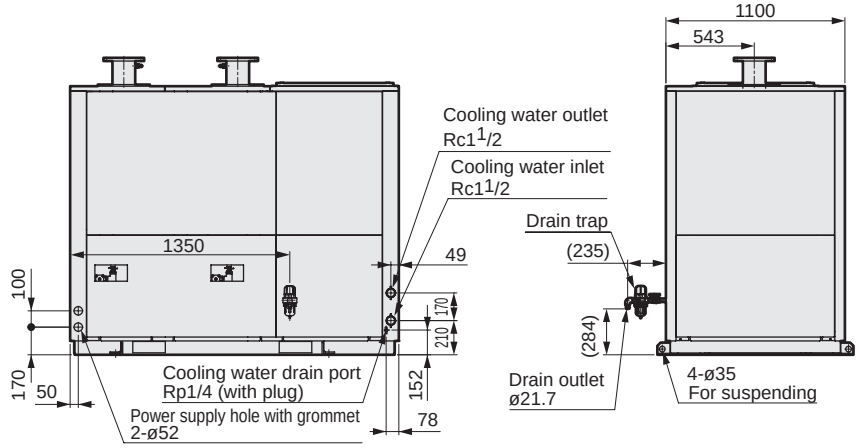

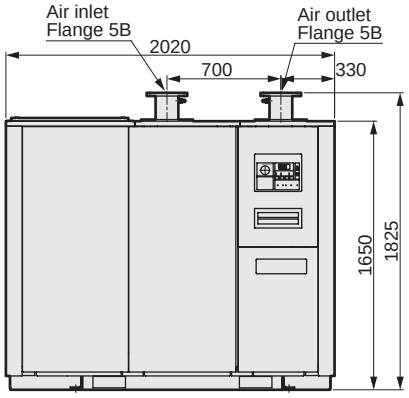

*1: The dew point display value is a guide, and is not the actual dew point.
To measure the actual dew point, measure the secondary side air with a dew point gauge.

Dimensions CAD

● GT9450W

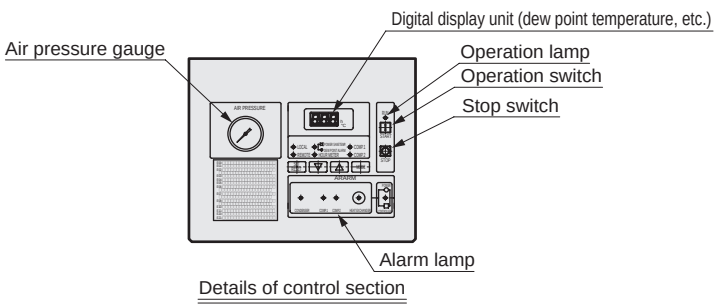

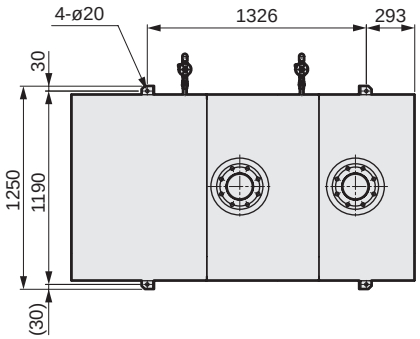

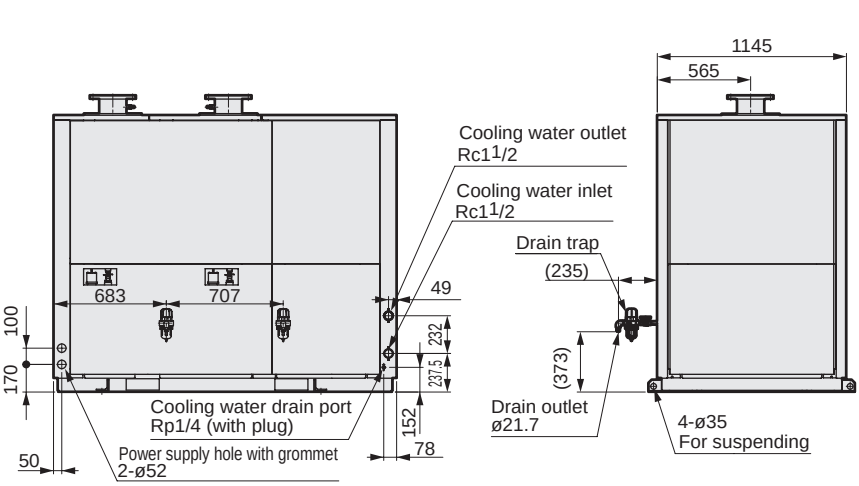

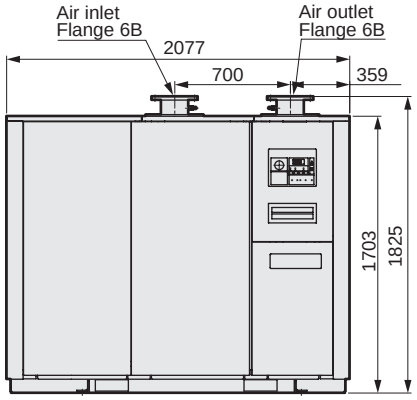

*1: The dew point display value is a guide, and is not the actual dew point.
To measure the actual dew point, measure the secondary side air with a dew point gauge.

MEMO



Refrigeration air dryer Xeroaqua (Inverter controlled water-cooling)

GT9000WV2 Series

For direct air compressor connection, standard inlet air

● Applicable air compressor: 710, 960 kW

JIS symbol

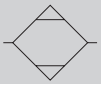

CAD

Specifications

Model No.		GT9710WV2	GT9960WV2
Applicable air compressor kW		710	960
Working range	Working fluid	Compressed air	
	Inlet air temperature °C	5 to 60	
	Inlet air pressure MPa	0.1 to 0.93	
	Cooling water inlet pressure MPa	0.2 to 0.74	
	Ambient temperature °C	2 to 50	
Rating	Processing flow rate m^3/min(ANR) 50/60Hz (*2)	139.1	184.2
	Processing flow rate m^3/min (Compressor intake condition) 50/60Hz (*3)	146.1	193.4
	Inlet air temperature °C	40	
	Inlet air pressure MPa	0.7	
	Cooling water inlet temperature °C	32	
	Cooling water volume m^3/h 50/60Hz	10.7	14.2
	Ambient temperature °C	32	
	Outlet air pressure dew point °C	10 (*4)	
Outlet air pressure dew point switching range °C		10 to 18 (Manual setting/outside temperature linkage switching function equipped)	
Power supply		Three-phase 200/200, 220 VAC 50/60 Hz (*5)	
Electrical specifications	Power consumption kW 50/60Hz (*6)	14.8	19.6
	Operating current A 50/60Hz (*6)	49.0	68.6
Refrigerant		R-407C	
Air outlet/inlet piping bore size (*7)		Flange 8B	
Weight kg		1330	2200

*1: Outer panel: Quality Cool White (Munsell No.5GY7.5/0.5)
Base: Munsell No.N3.0
*2: ANR shows conditions of 20°C atmospheric pressure and relative humidity 65%.
*3: This is a value converted to the intake condition of the air compressor in an environment of 32°C with a relative humidity of 75%.
*4. Contact CKD for information on the dew point performance guarantee.
*5: Make sure that the imbalance between phases of the power supply voltage is within ±2%.
*6. The power consumption and operation current are both reference values under the rated conditions, and are not guaranteed
*7: Flange is a 10K flange.
*8: GT9960WV2 is limited to the Japanese market. Contact CKD if export is required.

How to order (inverter controlled water-cooling)

GT9 (710) WV2- (G) - (AC380V)

Ⓐ Capacity category

Ⓑ Option *1

Ⓒ Voltage *2

Code	Description
Ⓐ Capacity category	
710	710 kW
960	960 kW
Ⓑ Option	
Blank	Standard products
G	Different voltage compatible
H2	SUS nameplate
H3	Simple export packaging
N1	Copper tube rust proof coating
Ⓒ Voltage	
200 VAC	
220 VAC (60Hz only standard)	
230 VAC	
240 VAC	
380 VAC	
400 VAC	
415 VAC	
440 VAC	
480 VAC	

Precautions for model No. selection

*1: Indicate options in alphabetical order.
*2: Specify the voltage for Item Ⓒ even when the model is a standard product.
Example: GT9710WV-AC200V
*3: Option H3 is packaged in plywood.
*4: The instruction manual and nameplates are provided in Japanese and English. However, the proof pressure certificate is available as Japanese text only. Contact CKD when an English version is required.
*5: Contact CKD if a photo of the completed product is required.
*6: Contact CKD to designate the color of the body panel.

Selection guide

(1) Temperature compensation coefficient

Inlet air temperature (°C)	35		40		45	
Pressure dew point (°C)	10	18	10	18	10	18
Coefficient	1.20	1.20	1.00	1.20	0.80	0.96
Inlet air temperature (°C)	**50**		**55**		**60**	
Pressure dew point (°C)	**10**	**18**	**10**	**18**	**10**	**18**
Coefficient	0.60	0.72	0.40	0.48	0.20	0.24

(2) Inlet air pressure coefficient

Inlet air pressure (MPa)	0.10	0.20	0.30	0.40	0.50	0.60	0.70	0.80	0.90	0.93
Coefficient	0.60	0.66	0.73	0.80	0.87	0.93	1.00	1.07	1.13	1.15

(3) Upper limit coefficient

Working cond (inlet press (MPa))	0.10	0.20	0.30	0.40	0.50	0.60	0.70	0.80	0.90	0.93
Coefficient	0.72	0.79	0.87	0.96	1.04	1.11	1.20	1.28	1.35	1.38

When determining the appropriate model from the standard processing air rate of each model No.
Standard processing air rate x (1) Temperature correction coefficient x (2) Inlet air pressure coefficient = Maximum processing air rate
*1: Select with conditions where the value of the product of each coefficient ((1)x(2)) does not exceed the upper limit coefficient of (3).

Conditions	Working conditions	Selecting conditions	Coefficient
Inlet air temperature	38 to 43°C	45°C	(1) 0.80
Pressure dew point	15°C	10°C	
Inlet air pressure	0.55 to 0.75 MPa	0.5 MPa	(2) 0.87
Frequency	50 Hz	50 Hz	50 Hz

Substitute the above conditions in the above formula and determine the quantity of handling air in cases when GT9710WV is used.
Product of each coefficient
(1) x (2) = 0.80 x 0.87 = 0.69
As the (3) upper limit coefficient of 1.04, when the inlet air pressure of the working conditions is 0.5 MPa, is not exceeded, the max. processing air rate will be 139.1 (standard processing air rate) x 0.69 = 95.9 m^3/min(ANR).
If the used air quantity is less than or equal to this value, select that model.

Dimensions CAD

● GT9710WV2

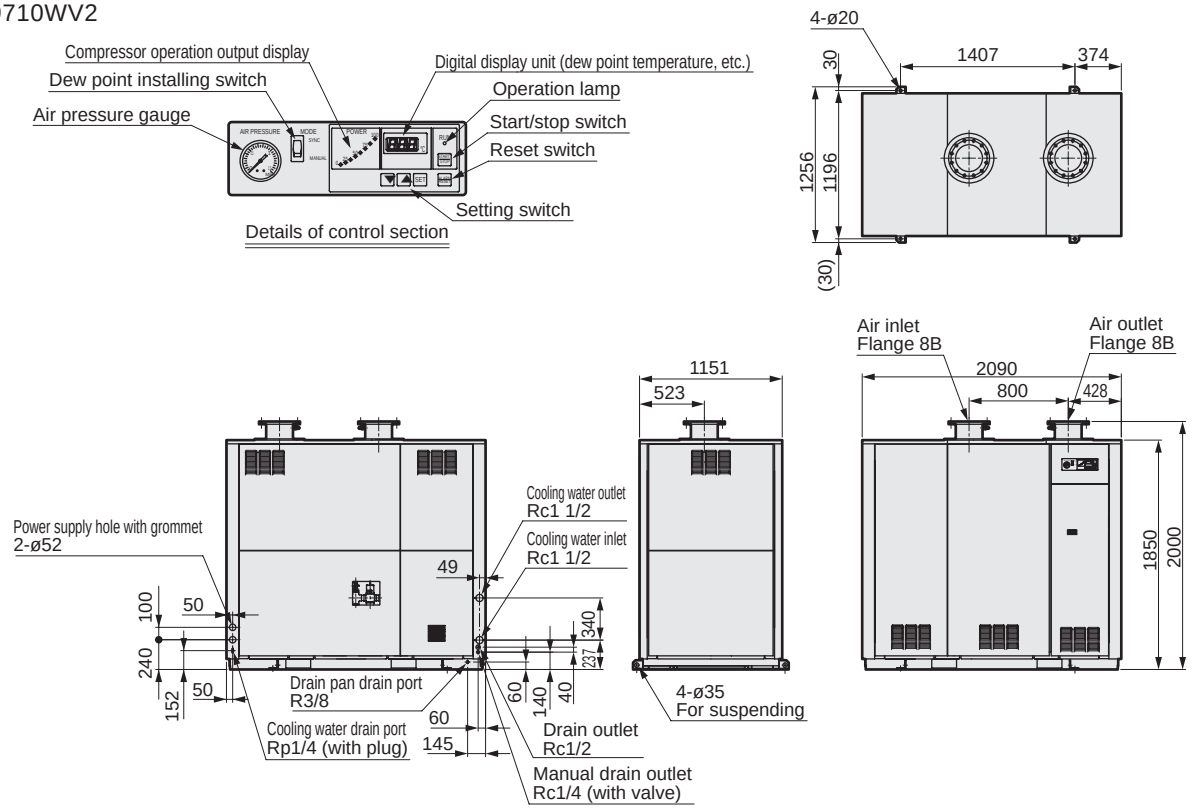

*1: The dew point display value is a guide, and is not the actual dew point.
To measure the actual dew point, measure the secondary side air with a dew point gauge.

● GT9960WV2

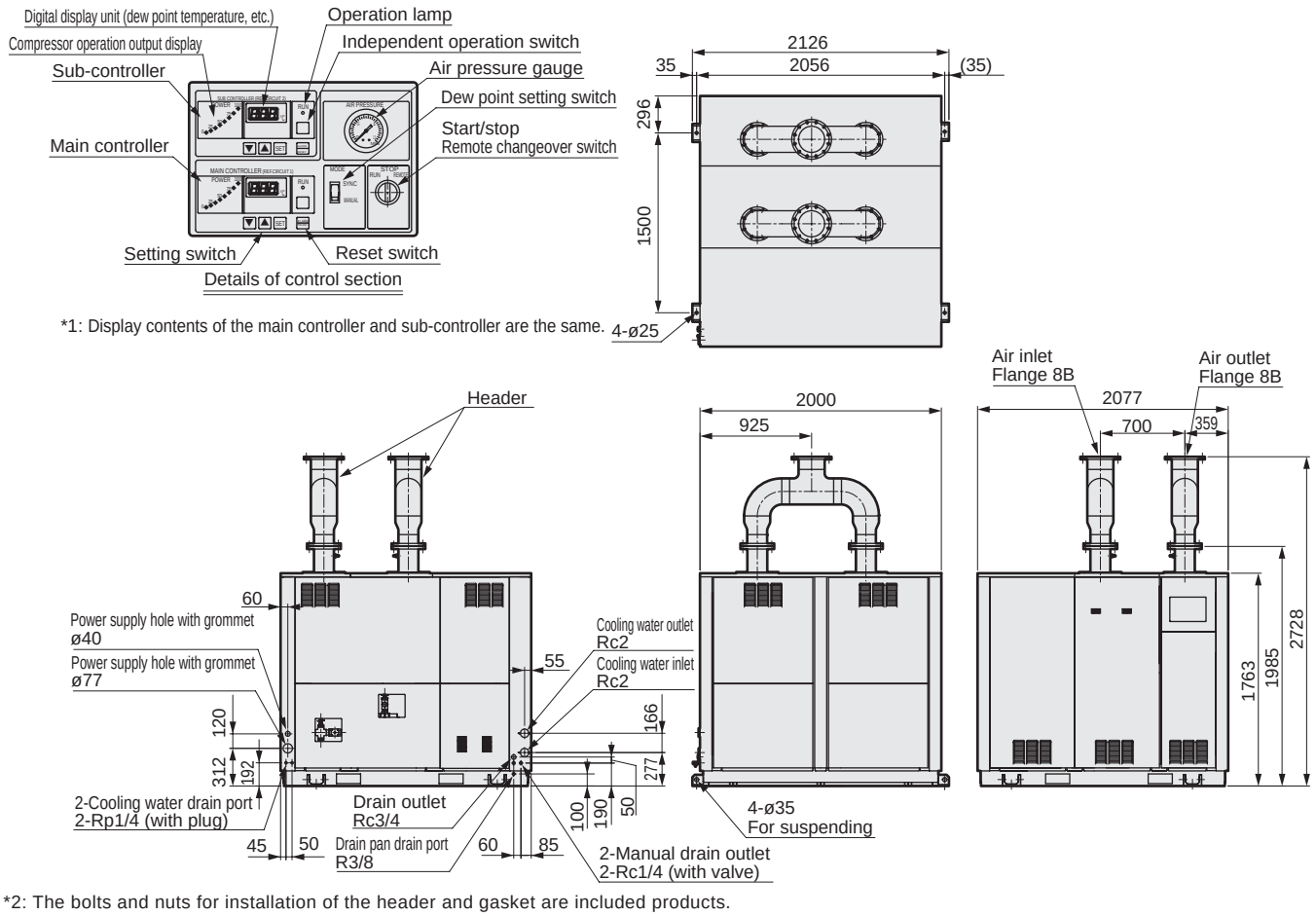

*2: The bolts and nuts for installation of the header and gasket are included products.
*3: The dew point display value is a guide, and is not the actual dew point.
To measure the actual dew point, measure the secondary side air with a dew point gauge.

Accessory (sold separately)

Foundation bolt

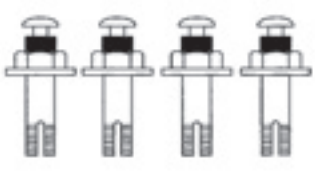

Core rod implant foundation bolts: Set of 4, made of stainless steel

Compatible model		No. / Size	RD-QFL-436465 M16xL100	RD-QFL-436466 M20xL130
GT9075D	GT9075WD		○	
GT9090D	GT9090WD		○	
GT9120D	GT9120WD		○	
GT9150D	GT9150WD		○	
GT9190D	GT9190WD		○	
GT9240	GT9240W		○	
GT9300	GT9300W		○	
GT9380	GT9380W		○	
GT9450	GT9450W		○	
		GT9710WV2	○	
		GT9960WV2		○

Companion flange

Set of insert welded flanges, hexagon head bolts, nuts, and gasket

Compatible model		No. / Size	RD-KFL-436467 Flange 2 1/2B	RD-KFL-436468 Flange 3B	RD-KFL-436469 Flange 4B	RD-KFL-436470 Flange 5B	RD-KFL-436471 Flange 6B	RD-KFL-436472 Flange 8B
GT9120D	GT9120WD		○					
GT9150D	GT9150WD			○				
GT9190D	GT9190WD			○				
GT9240	GT9240W				○			
GT9300	GT9300W					○		
GT9380	GT9380W					○		
GT9450	GT9450W						○	
		GT9710WV2						○
		GT9960WV2						○

Safety Precautions

Be sure to read this section before use.
Refer to Intro Page 63 for general precautions.

Product-specific cautions: Xeroaqua dryer GT Series

Manufacturer's Exemption of Liability

⚠DANGER

The manufacturer cannot be held liable in the following cases:

- In the case where there are serious errors in the operator's use.
- Inappropriate modifications or repairs using nonstandard parts, made by the user.

General matters

⚠DANGER

■ Do not use for applications other than removing moisture from compressed air.

⚠CAUTION

■ Do not use for caisson shields or medical devices such as breathing devices.
- There is a risk of personal injury.

■ Do not mount or use in transportation equipment such as vehicles or ships.
- The internal devices could be damaged by vibration, etc.

During transport

⚠WARNING

■ This product is filled with a refrigerant (R-410A, R-407C). (GT9960WV2 is 12 kg and over while others are less than 12 kg)

Upon transport (land, sea, air), be sure to comply with the laws and regulations applicable to each situation.

Transportation

⚠WARNING

■ Laying the product on its side or applying vibration or impact during transportation are strictly prohibited.

■ Use a forklift or a hoist to carry the product.

■ When using a hoist, lift the product with ropes, etc., with a hoisting hook.

- Series: GT9075D to 9190D
  GT9075WD to 9190WD

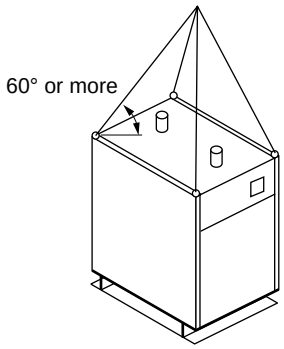

- Series: GT9240 to 9450
  GT9240W to 9450W
  GT9710WV2,GT9960WV2

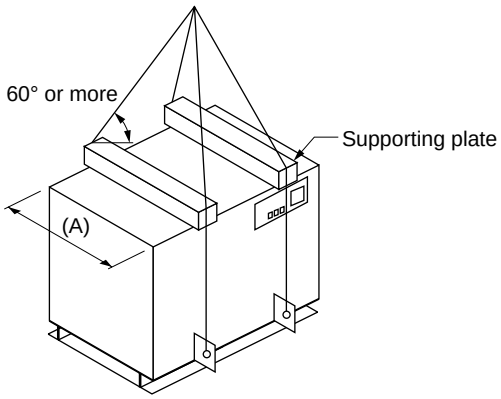

Supporting plate
Make sure that the supporting plate length is longer than the dryer width (A) by approximately 100 mm.
Be sure to place a cushioning material between the supporting plate and the dryer to prevent scratching of the panel.

Installation

Ambient temperature

⚠CAUTION

- Do not use this product in areas that exceed the max. operating ambient temperature.
- Do not install this product in areas subject to radiant heat.
- When the max. operating ambient temperature is likely to be exceeded, implement countermeasures by installing fans and air inlets.
- Do not use this product in areas that fall under the min. operating ambient temperature.

Place

⚠CAUTION

- Install indoors.
- Install the product in well ventilated areas that are free of waste and dust.
- Install the product so that it is not exposed to rainwater.
- Do not use the product in areas with high humidity or where there is a risk of condensation.
- Avoid using the product in areas exposed to direct sunlight or where heat is generated.
- Do not use in locations with corrosive gases. (Refer to page 1725)

Floor surface

⚠CAUTION

- Install on a floor surface that is not subject to vibration.
- Install on a level floor surface.
- Be sure to shore up foundations in areas where the ground is soft.
- Refer to the dimensions for the hole dimensions and positions for the foundation bolts.

Vibration

⚠CAUTION

- When using a reciprocating compressor, use a rubber hose for high pressure or a flexible tube for a part of the piping with the air dryer to absorb vibrations.

Maintenance space

⚠CAUTION

- Make sure that the space is well ventilated, and secure enough space for maintenance and inspection.
  - Compatible models: GT9075D (WD) to 9120D (WD)
    Front: 1000 mm or more,
    Either right or left side: 600 mm or more
  - Compatible models: GT9150D (WD), 9190D (WD)
    Front: 1000 mm or more, left side: 600 mm or more
  - Compatible models: GT9240 to 9450, GT9240W to 9450W, GT9710WV, 9960WV
    Front surface, rear surface, and left side: 600 mm or more each

Piping

Air piping method

⚠CAUTION

- With GT9960WV2, install the (2) headers of the included products each at the air inlet and outlet flange by using the attached gaskets, bolts and nuts.
- Arrange the piping of the air dryer as shown in the figure below.

  For 24-hour operation:

  To prepare for unexpected situations, parallel installation is recommended.
  1 unit can be used for normal use while the other will serve as a spare unit.

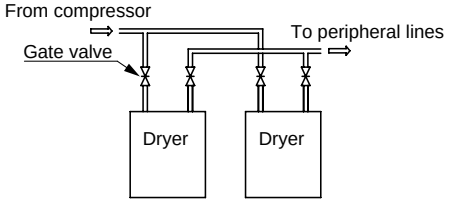

For intermittent operation:

Be sure to install a bypass pipe for maintenance.

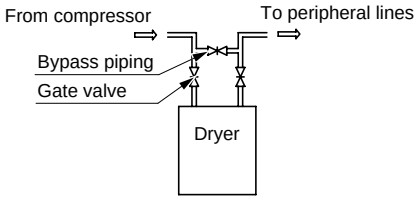

- Stainless steel pipes and galvanized steel pipes (white steel) are recommended as piping materials. In addition, be sure to flush the pipes prior to connecting the pipes.
- When using existing pipes or black pipes, or if an oil-free air compressor is to be used and a large amount of waste, etc., may be generated within the pipes, install a P type main line filter before the dryer.

■ When there is a vertical section in the air piping from the compressor to the air dryer, the accumulated drainage may suddenly flow into the unit and leak from the end. When it is necessary to install vertical piping, be sure to install a drain trap, etc., to prevent drainage from accumulating.

■ Design the piping so that the weight of the pipes is not applied to the body.

■ Make sure that the pipes used are capable of sufficiently withstanding the working pressure and temperature and ensure that there is no leakage of air from connected areas.

Drain piping method

⚠CAUTION

■ The drain trap is installed on the outside of the dryer. Although the discharge interval time of the drain is adjusted to 25 to 37 times/30 seconds (0.59 MPa) upon shipping, adjust the interval time in accordance with the working conditions to prevent the bowl from becoming filled with water due to the needle valve of the drain trap. Discharge the drain only after atmosphere release. (Series: GT9075D to 9450, GT9075WD to 9450W)

■ The drain will be regularly discharged with the solenoid valve within the dryer. Arrange the drain piping in accordance with the bore size of the drain outlet on the side panel of the dryer. If the drain piping contains a vertical section or when the pipes are too long, this may cause back pressure and prevent the drain from being discharged. Install piping with a downward slope such that the drain flows naturally. (Series: GT9710WV2, 9960WV2)

■ In cases when oil will be mixed with the drainage, wastewater treatment is required. Consult a nearby business operator specializing in industrial waste for treatment of the wastewater.

■ Secure the drainage tube, etc., to prevent the tube from moving during drain discharge.

■ Use the ball valve before the drain trap in a fully open state during normal operation. Use the ball valve during maintenance. (Series: GT9075D(WD) to GT9450(W))

Cooling water piping method

⚠CAUTION

■ Arrange the piping upon confirming the outlet and inlet of the cooling water.

■ Be sure to install drain openings and stop valves to enable maintenance.

■ Design the piping so that the weight of the pipes is not applied to the body.

■ Make sure that the pipes used are capable of sufficiently withstanding the working pressure and temperature and ensure that there is no leakage of water from connected areas.

■ Use galvanized steel pipes, etc., for the piping material. In addition, be sure to flush the pipes prior to connecting the pipes.

■ Be sure to implement temperature maintenance construction in areas where the ambient temperature when stopped will be 2°C or below during the winter.

■ The water quality of the cooling water and supplied water should be as per the “Guideline of Water Quality for Refrigeration and Air Conditioning Equipment” (Water quality standard: Cooling system - Circulating type - Circulating water) provided by the Japan Refrigeration and Air Conditioning Industry Association (JRA-GL-02). Refer to page 1725.

■ Install a strainer of approximately 20 mesh at the cooling water inlet.

■ Be sure to clean the capacitors once or twice a year.

Wiring

⚠CAUTION

■ Use within the power voltage range in the specifications.

■ Install an overload protection and circuit breaker on the main power supply.

■ As a crankcase heater is built in to protect the compressor, be sure to energize the unit at least 12 hours prior to starting operation. (Series: GT9240(W) to 9450(W), GT9710WV2, 9960WV2)

■ Be sure to correctly and securely connect the power supply wires, signal wires, operating wires, and ground wire. In addition, never connect the ground wire to a water pipe, gas pipe, or a lightning rod.

■ Select wires with suitable capacities.

Air circuit

Air quality

⚠CAUTION

■ Do not use when the inlet air contains corrosive gas, chemical solutions, organic solvents, or combustible gas. (Refer to page 1725)

Filter

⚠CAUTION

■ Refer to the table of system selection examples on page 1759 for the model No. of the filter to use around the body.

Air temperature

⚠CAUTION

■ Do not use in an environment that exceeds the max. inlet air temperature or max. working pressure.

■ When the inlet air temperature is high, install an after cooler, etc., in order to lower the temperature to the max. inlet air temperature or below for use. The drainage generated with the after cooler should be removed before the dryer.

■ When using the product in a compressed air line subject to rapid fluctuations of pressure, install an air tank, etc., after the air dryer to ensure that the fluctuations of pressure are kept at 0.34 MPa/min or less. Rapid fluctuations of pressure may cause failure.

■ Although GT9300(W) through 9450(W) are equipped with the capacity controlling function with 2 refrigeration compressors, when the load fluctuation is large, the volume control may be unable to keep up with the change, negatively affecting the dew point. In this case, operate the 2 refrigeration compressors at 100%.

Maintenance

⚠CAUTION

■ With the air cooling, clean the condenser or dust filter with a vacuum cleaner or air blower once per month.
Failure to clean properly may cause failure of the compressor or fan motor, etc.

■ Be sure to remove the drain trap once a week for disassembled cleaning. When parts become dirty, this could prevent proper operation and cause the drain to flow out from the secondary side. (Series: GT9075D to 9450, GT9075WD to 9450W)

■ Perform an operation check of the solenoid valve for the drain trap once a day by pressing the test button. (Series: GT9710WV2, GT9960WV2)

■ With the water cooling, water stains adhering to the water cooled condenser may degrade performance or even cause abnormal stops. Perform inspections once every two years and, as needed, implement cleaning of the water cooled condenser. When connecting the water cooling piping, we recommend connecting cleaning pipes as well. Failure to clean properly may cause failure of the compressor or make it difficult to clean the condenser.

Repair parts

⚠CAUTION

■ Periodically check the parts for deterioration and replace them as necessary to use the product safely through its service life. Refer to the instruction manual included with the product for details.

Regular maintenance parts

⚠CAUTION

■ Periodically inspect the regular maintenance parts and replace them according to the standard replacement frequency to use the product safely through its service life. Refer to the instruction manual included with the product for details.

Others

⚠WARNING

■ This product falls under the “Act for Rationalization and Management Optimization of the Use of Fluorocarbons (Fluorocarbons Emission Reduction Act)”. One or more simplified inspection per quarter and periodic inspections based on the law (GT9710WV2, GT9960WV2) are required. Be sure to collect the Freon gas when repairing or disposing of the product. Contact CKD for inspection and Freon gas collection.

⚠CAUTION

■ A class 2 pressure vessel withstand pressure certificate is included with the device. Keep this while using the components. (Series: GT9240 to 9450, GT9240W to 9450W, GT9710WV2, 9960WV2)
(Applications to the Labor Standards Supervision Office are no longer required in Japan.)

Installation environment and air quality

⚠ CAUTION

■ Refrigeration air dryers use copper pipes (phosphorus deoxidized copper pipes) for the refrigerant gas pipes and pipes within the heat exchanger. When corrosion causes a hole in these copper pipes, the refrigerant gas will leak and make it impossible to operate the unit, or cause failure such as water leaking from the compressed air outlet side of the air dryer. In addition, copper is also used as conductive materials for the electrical wiring, etc. Corrosion thereof may cause failures which may lead to safety problems such as electrical leakage accidents.
Especially in the copper piping in the heat exchanger, dew formation and desiccation are repeated. If corrosive elements are present, they may condense on the surface of the copper piping and accelerate corrosion. Under such conditions, take special care with the air dryer installation environment and the air taken in by the air compressor. Failures caused by corrosion are not covered by the warranty.

Plant exhaust may contain corrosion-promoting elements such as NOx (nitrogen oxides), SOx (sulfur oxides), and CO_2 (carbon dioxide). Select the air dryer and air compressor installation position with care so that they are not affected by plant exhaust. In rare cases, if chlorine-based organic solvents (trichloroethylene, etc.), aldehyde or alcohol (formaldehyde generated from building materials or methanol in the chemicals used) are absorbed by the air dryer and hydrolyzed, the copper piping could corrode (like an ant nest). Caution is required in these cases.

Desiccant air dryer
(Heatless dryer)

■ **Refining and pressure adjusting components/main line units**

CONTENTS

Function explanation of desiccant air dryer	1786
System	1787
Series variation	1788
Properties and handling of desiccant	1789
Small heatless dryer HD Series	1792
Medium to large heatless dryer SHD Series	1796
Manual air dryer 4001 and 4002 Series	1803
Moisture indicator	1806
⚠ Safety precautions	1807

DesicDry

Suction principles and circuit diagram

The heatless dryer is a system that utilizes the characteristics of an adsorbent (desiccant) which constantly tries to create a state of equilibrium with the vapor concentration of the ambient air. The unit has 2 cylinders, repeatedly switching between the one for the process of absorbing the water vapor from the air, and the other for the regeneration process of releasing the adsorbed moisture with the dry air created. This device will constantly supply dry air at the outlet as moist air enters it.

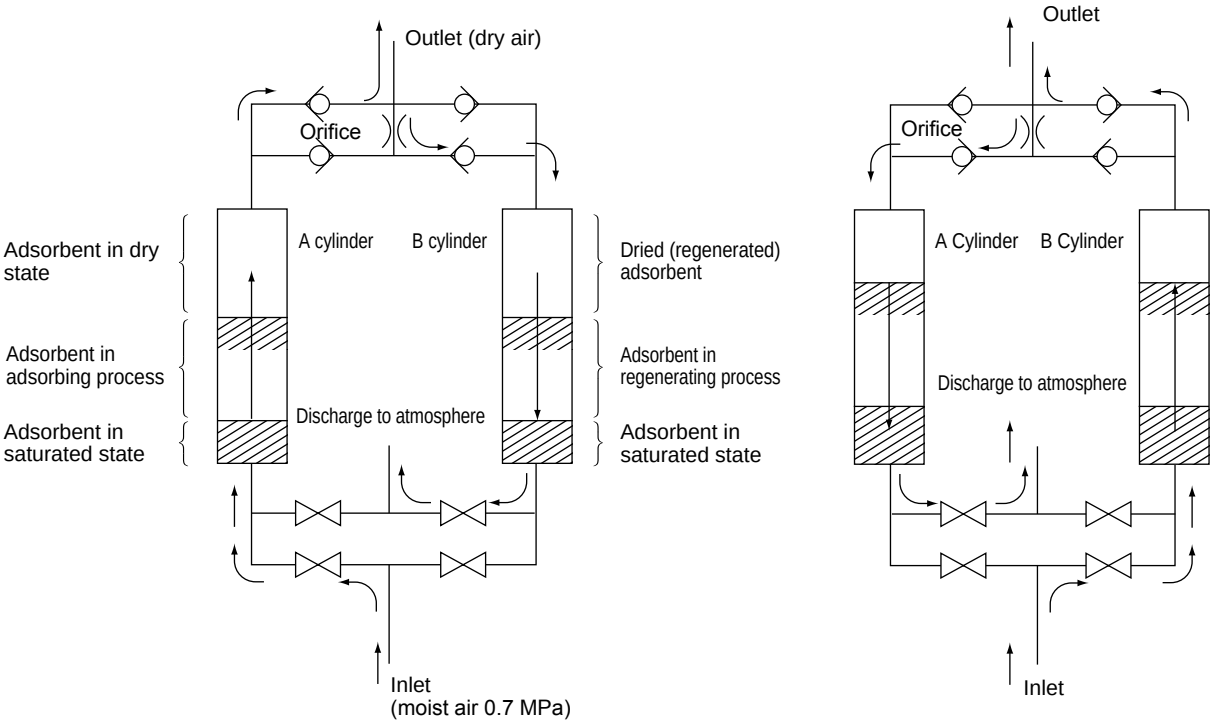

Moist air coming in from the inlet will enter the A cylinder, have its moisture removed due to the adsorbent, and then leave from the outlet as dry air. Part of the dry air coming out of the A cylinder will flow through the orifice, be reduced in pressure to an atmospheric pressure, enter the B cylinder, remove moisture from the moist adsorbent, and be exhausted into the air.

By using a part of the air dried under pressure, when it is reduced in pressure by the atmosphere to regenerate the desiccant, the drying efficiency will increase and improve regeneration efficiency.

For example, when dry air of 0.7 MPa is reduced in pressure to the atmospheric pressure, the volume of air expands to approximately 8 times as much and the relative humidity per unit of volume becomes approximately 1/8. Accordingly, the adsorbent releases a greater amount of moisture in trying to create a state of equilibrium with that air.

After a certain amount of time, the flow of air is reversed with a timing motor for adsorption to take place in the B cylinder while regeneration will take place in the A cylinder. These operations will be repeatedly performed.

Heatless dryer system

1. Purge flow rate

The heatless dryer uses some of the dry air created by the dryer for the regeneration of the adsorbent that has absorbed moisture. The air used in this regeneration is referred to as the purge air, and the min. required volume is determined from principles.

$$\text{Theoretical purge rate} = \frac{1}{\text{Air pressure during adsorption (absolute pressure)}}$$

For example, when operating under 0.7 MPa, the theoretical purge rate is approximately 12.9% (under 100% load).

In reality, 15 to 23% is configured in consideration of the absorbing/releasing efficiency of the desiccant and the efficiency of the device. Accordingly, if the operating conditions differ, the purge rate will differ and so will the processing air rate and purge volume.
Be sure to review the catalog to make sure that the operating conditions of use and necessary outlet dew point will be satisfied.
In addition, ideal purge volumes can be set at the plant to suit the specifications of customers (custom made). As it will be necessary to reconfigure the unit when working conditions are changed due to relocation, etc., consult with CKD.

2. Oil removal

In the case of desiccant air dryers, as the desiccant adsorbing oil will interfere with the adsorption of moisture, the outlet dew point may become lower and the life of the desiccant may become shorter.
Accordingly, when installing a desiccant air dryer in an air line using a lubrication air compressor, be sure to install an oil removing filter (M type filter) on the primary side of the dryer.

3. Installation of filter on dryer secondary side

In the case of desiccant air dryers, as desiccant powder will flow out to the secondary side of the dryer, depending on the air purpose (required air quality), install a filter (a P, S, or M type filter or a combination thereof) on the secondary side of the dryer.

4. Silencer replacement

When switching the adsorbing side of the desiccant cylinder, as the cylinder (in a pressurized state) that had until then been adsorbing is suddenly reduced in pressure, a loud exhaust noise will be generated every time the switching takes place. Although a silencer is provided in order to suppress this exhaust noise, after a long period of use, the desiccant powder will build up and clog the pores thereof. Neglecting this will have an impact on the regenerating performance of the desiccant and the described dew point performance may not be exhibited. In addition, when the clogging becomes worse, the silencer may become damaged by the pressure during exhaust.
As a guideline for replacement, be sure to replace when the pressure on the side of the regenerating cylinder exceeds 0.05 MPa or when one year has passed.

5. Pressure fluctuation on dryer secondary side

Pressure fluctuates around the switching process (suction/release) for the desiccant cylinder, as air flow rate fluctuation other than the user's is caused by temporary purge stop and the pressurized filling process of the atmospheric pressure cylinder (regeneration cylinder). The fluctuation range is greatly affected by the situation of the piping with which the dryer is installed, and in the worst case may be as large as 0.1 MPa. In cases when this pressure fluctuation may impact factory operation, consider setting the source pressure higher or installing an air tank on the secondary side.

6. Bypass circuit

In most cases with dryers, a bypass circuit which bypasses the dryer is provided for emergency air supply. This can be used by opening the valve in cases when it is necessary to supply air even when the dryer is broken or in cases when repairing the dryer while allowing the air to flow as a temporary measure. However, in this case, moist air from which moisture has not been removed will of course be supplied within the factory.
When a heatless dryer is selected, it is often the case that extremely dry air is required. Use extreme caution when opening the bypass circuit since opening it will cause moisture to enter all the air pipes past the dryer, creating a great amount of work to recover from this state. In such cases, it is recommended that a spare unit be installed.

7. Dew point display

In accordance with common practice, although performance display has been the pressure dew point for refrigeration air dryers and atmospheric dew point for heatless dryers and membrane dryers (refer to page 1716 for terminology), due to establishment of JISB8392-1 there is a trend of unifying the display to the pressure dew point. At CKD, performance will be displayed with the pressure dew point from the super heatless dryer SHD3000 Series. Note that depending on the model or manufacturer, the display signals may become mixed.

Series variation

Desiccant air dryer (heatless dryer)

	Compact			Large		
Series	HD Series			Super heatless SHD Series		
Applications of installation	Point-of-use drying in plants, equipment embedded					
Features	Inlet air temperature 21°C			Inlet air temperature 35°C		
kW	Atmospheric dew point -17.5°C	Atmospheric dew point -40°C	Atmospheric dew point -72°C	Pressure dew point -20°C (-40°C) *2	Pressure dew point -40°C (-57°C) *2	Pressure dew point -60°C (-74°C) *2
0.4			● (HD-0.5)			
0.75	● (HD-0.5)	● (HD-0.5)	● (HD-1)			
1.5	● (HD-1)	● (HD-1)	● (HD-1.5)			
2.2	● (HD-1.5)	●● (HD-1.5,-2)	● (HD-2)			
3.7	● (HD-2)	● (HD-4)	● (HD-4)			
5.5	● (HD-4)		● (HD-6)			
7.5	● (HD-6)	● (HD-6)	● (HD-9)			
11	● (HD-9)	● (HD-9)				
15	▲ (HD-9)			● (SHD3025-G/M)	● (SHD3025-G/M)	● (SHD3025-M)
22				● (SHD3045-G/M)	● (SHD3045-G/M)	● (SHD3045-M)
37				● (SHD3075-G/M)	● (SHD3075-G/M)	● (SHD3075-M)
55				● (SHD3100-G/M)	● (SHD3100-G/M)	● (SHD3100-M)
75				● (SHD3125-G/M) ● (SHD3150-G/M)	● (SHD3125-G/M) ● (SHD3150-G/M)	● (SHD3125-M) ● (SHD3150-M)
95				● (SHD3200-G/M)	● (SHD3200-G/M)	● (SHD3200-M)
120				● (SHD3240-G/M)	● (SHD3240-G/M)	● (SHD3240-M)
150						
200						
250						
300						
400						
480						
710						
960						
1450						
Dew point monitor	×	×	×	● Standard equipment	● Standard equipment	● Standard equipment
Energy-saving device equipped	×	×	×	● Standard equipment	● Standard equipment	● Standard equipment
Different voltage compatible	● Option	● Option	● Option	● Option	● Option	● Option
Paint color specification	● Option	● Option	● Option	● Option	● Option	● Option
Remote control, external signals	● Custom made	● Custom made	● Custom made	● Standard equipment	● Standard equipment	● Standard equipment
Outdoor	×	×	×	×	×	×
Anchor bolt	×	×	×	● Option	● Option	● Option
SUS nameplate	● Option	● Option	● Option	● Custom made	● Custom made	● Custom made
Export specifications	● Option	● Option	● Option	● Option	● Option	● Option
Export packing	● Custom made	● Custom made	● Custom made	● Custom made	● Custom made	● Custom made
Product photo	● Option	● Option	● Option	● Custom made	● Custom made	● Custom made
Appearance						
Page	1792			1796		

*1: This table has been prepared based on the conditions listed below; correction of models will be necessary depending on multiplier calculations in cases when the conditions are different.
Inlet air pressure: 0.7 MPa, Inlet air temperature: in accordance with rating of each series,

*2: The value in parentheses is the atmospheric dew point converted value.

⚠ Properties and handling of desiccant

1. Desiccant disposal methods

The desiccant is an adsorbent and there is a possibility that various substances other than moisture contained in the compressed air have been adsorbed. Please be sure to appropriately process used desiccant as industrial waste.

2. Inlet air temperature and suction performance

The adsorption performance of the desiccant is greatly dependent on the temperature, and its ability to adsorb moisture will suddenly decrease when exceeding a temperature of 55°C. (This is why the inlet air temperature range of the heatless dryer is rated up to 50°C.) In addition, as the ability to adsorb moisture in general is higher when the temperature is lower, efficient operation is made possible by installing the heatless dryer in an area where the lowest possible inlet air temperature can be realized.

3. Oil removal

Unlike the heated type, instead of fully adsorbing moisture with the desiccant, heatless dryers repeat the process of adsorbing a little moisture on the surface and quickly removing this moisture (regenerating). Accordingly, it is necessary to always keep the surface of the desiccant clean and in a state where it is easy for the moisture to be adsorbed.
The desiccant will adsorb oil as well if the compressed air contains oil. However, oil is not removed as easily as moisture and will infiltrate the desiccant and cause interference with the adsorption of moisture.
Accordingly, when installing the product in a lubrication air line, be sure to install an oil removing filter (M type) on the primary side of the heatless dryer.

4. Desiccant replacement period

Replacement in two years is standard for desiccant.

Heatless dryer
HD/SHD

■ Refining and pressure adjusting components/main line unit/desiccant air dryer

Overview

This is a heatless dryer of the pressure reduction self-regenerating system which does not use heat for regeneration of the desiccant.
Ultra dry air can be supplied easily and stably.

Features

(1) Ultra dry air can be easily supplied
Ultra-low dew point -60 to -72°C (at atmospheric pressure)
(2) Easy maintenance
(3) Pressure dew point digital display with indicator for dew point monitor (SHD only)
(4) High durability



CONTENTS

● Compact (HD) 1792
● Medium/large (SHD) 1796
⚠ Safety precautions 1807



Desiccant air dryer (compact heatless dryer)

HD Series

Stable supply of ultra dry air with atmospheric dew point -72°C.

● Processing air flow rate: 75 to 1235 ℓ/min (ANR) (0.7 MPa, atmospheric dew point -72°C)

JIS symbol

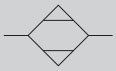

RoHS CAD

Specifications

Descriptions	HD-0.5	HD-1	HD-1.5	HD-2	HD-4	HD-6	HD-9
Port size Rc	3/8						3/4
Inlet air pressure range MPa	0.2 to 1.0						
Inlet air temperature range °C	5 to 52						
Ambient temperature °C	-1 to 52						
Regenerating system	Self-regeneration non-heating system						
RegenerationCycle	1 minute (0.5-minute switch)					4 minute (2-minute switch)	
Power V	Single-phase 100 VAC, 200 VAC 50/60 Hz						
Power consumption W	26						52
Desiccant	Synthetic zeolite						
Weight kg	6.5	7.0	7.5	9.5	11.5	21.5	42.5
Desiccant cylinder No.	15-8771	15-8772	15-8773	15-8774	15-8775	F3-505026	F3-505026
Desiccant filling No.	15-8771-D	15-8772-D	15-8773-D	15-8774-D	15-8775-D	F3-505026-D	F3-505026-D
For dew point monitorIndicator	Standard equipment						
Silencer	Standard equipment						

*1: In cases when the fluid contains oil, attach an oil removing filter (oil mist filter) on the inlet side. Filter with Degree of filtration that suits the OUT side (5 µm, 0.3 µm, oil mist filter).
*2: As the IN port and OUT port are provided at 2 locations each to the right and left, use a blanking plug with any port that will not be used.
*3: The standard paint color is quality cool white (Munsell No. 5 GY 7.5/0.5).
*4: For applications for use within clean rooms, consult with your CKD branch or dealer.

How to order

HD - ○ - ○ - AC100V

Ⓐ Flow rate classification

Ⓑ Option *4

Ⓒ Voltage

Code	Item
Ⓐ Flow rate classification	
0.5	
1	
1.5	
2	
4	
6	
9	
Ⓑ Option	
Blank	Standard
G	Voltage specification
H	English language specifications
H2	Stainless steel nameplate
Y2	Product photo
Ⓒ Voltage	
AC100V	
AC200V	

When placing an order

● The heatless dryer is adjusted to the required atmospheric dew point, flow rate, etc., at shipment. Always indicate the following items when placing an order.

● Model No. [ ]
● Required outlet flow rate [ ] L/min (ANR)
● Required atmospheric dew point [ ] °C
● Inlet air pressure [ ] MPa
● Inlet air temperature [ ] °C

⚠ Precautions for model No. selection

*1: For lubrication compressors, attach an oil removal filter (oil mist filter) on the inlet side of the heatless dryer. Attach a filter with a filtration rating that suits the usage purpose on the OUT side.
*2: As the heatless air dryer is equipped with a dew point monitoring device (moisture indicator), it is possible to check the drying status.
*3: Unit performance may not be attained if used at less than the selected pressure. Always select the model No. for the working pressure.
*4: When ordering several options, indicate the required options in alphabetical order.

Selection guide

● Reading the max. flow rate table

Two numbers are listed in each box in the max. flow rate table. The number on the top indicates the inlet air flow rate necessary to dry the flow rate listed on the bottom. The number on the bottom indicates the max. outlet flow rate of the dry air. The difference between the number on the top and the number on the bottom is the purge flow rate necessary for regeneration drying.

Max. flow rate table

Unit: ℓ/min (ANR)

Model No.		Atmospheric dew point -17.5°C							Atmospheric dew point -40°C							Atmospheric dew point -72°C						
		HD-0.5	HD-1	HD-1.5	HD-2	HD-4	HD-6	HD-9	HD-0.5	HD-1	HD-1.5	HD-2	HD-4	HD-6	HD-9	HD-0.5	HD-1	HD-1.5	HD-2	HD-4	HD-6	HD-9
Inlet air pressure (MPa)	1.0	165	325	445	665	1,225	1,870	3,000	130	255	335	500	935	1,405	2,150	105	210	290	435	735	1,105	1,685
		145	280	380	570	1,085	1,645	2,605	110	210	270	405	795	1,180	1,830	85	165	225	340	595	880	1,345
	0.9	150	300	405	615	1,120	1,710	2,740	115	235	310	460	855	1,285	1,970	95	195	265	400	670	1,010	1,540
		130	255	340	520	980	1,485	2,345	95	190	245	365	715	1,060	1,650	75	150	200	305	530	785	1,200
	0.8	135	270	370	555	1,015	1,545	2,475	105	215	280	415	775	1,160	1,780	85	175	240	360	610	910	1,390
		115	225	305	460	875	1,320	2,080	85	170	215	320	635	935	1,460	65	130	175	265	470	685	1,050
	0.7	120	240	325	490	890	1,370	2,195	95	190	245	370	685	1,030	1,575	75	155	215	320	540	810	1,235
		100	195	260	395	750	1,145	1,800	75	145	180	275	545	805	1,255	55	110	150	225	400	585	895
	0.6	105	210	285	430	785	1,195	1,915	80	165	215	320	600	900	1,375	65	135	185	280	470	705	1,075
		85	165	220	335	645	970	1,520	60	120	150	225	460	675	1,055	45	90	120	185	330	480	735
	0.5	90	180	245	370	675	1,030	1,650	70	140	185	280	515	775	1,185	55	115	160	240	405	610	930
		70	135	180	275	535	805	1,255	50	95	120	185	375	550	865	35	70	95	145	265	385	590
	0.4	75	150	205	305	560	855	1,370	60	120	155	230	430	640	985	45	95	135	200	335	505	770
		55	105	140	210	420	630	975	40	75	90	135	290	415	665	25	50	70	105	195	280	430
	0.3	60	120	165	245	450	690	1,105	45	95	125	185	345	520	795	40	80	105	160	270	405	620
		40	75	100	150	310	465	710	25	50	60	90	205	295	475	20	35	40	65	130	180	280
	0.2	45	90	125	185	340	515	825	35	70	95	140	260	385	595	30	60	80	120	205	305	465
		25	45	60	90	200	290	430	15	25	30	45	120	160	275	10	15	15	25	65	80	125

● Selection method

The above flow rate table is for conditions of an inlet air temperature of 21°C and an atmospheric dew point of -17.5°C, -40°C, and -72°C. When conditions differ, determine the specifications by using the multiplier table below left.

Inlet air flow rate = (Inlet air flow rate listed in the max. flow rate table when the atmospheric dew point is -40°C) x multiplier

Purge flow rate = (Inlet air flow rate listed in the max. flow rate table when the atmospheric dew point is -40°C) - (Outlet air flow rate listed in the max. flow rate table when the atmospheric dew point is -40°C)

Outlet air flow rate = (Inlet air flow rate) - (Purge flow rate)

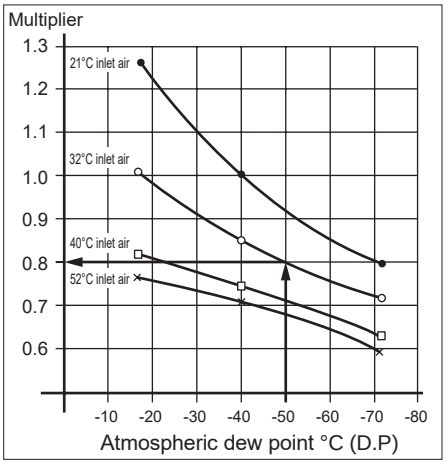

(Example) When pressure is 0.9 MPa, atmospheric dew point is -50°C, and inlet air temperature is 32°C, the inlet air flow rate, purge flow rate, and outlet air flow rate of HD-4 are,

Inlet air flow rate = 855 × 0.8 ≈ 684 ℓ/min

Purge flow rate = 855 - 715 = 140 ℓ/min

Outlet air flow rate = 684 - 140 = 544 ℓ/min

Time chart

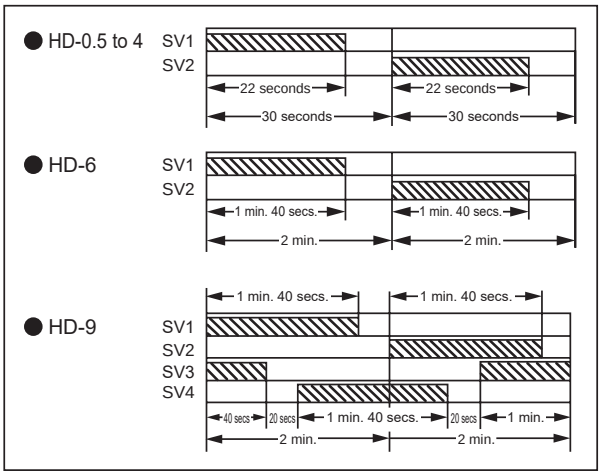

* Number of seconds is displayed at 60Hz.
Multiply by approx. 1.2 for 50 Hz.

When a heatless dryer is installed

● When starting test operation after installation of this unit, operate the unit for the time below with a flow rate that is approximately 10 to 20% of the flow rate that will be used.

Atmospheric dew point (°C)	-17.5	-40	-72
Time (h)	2	6	72

Functions

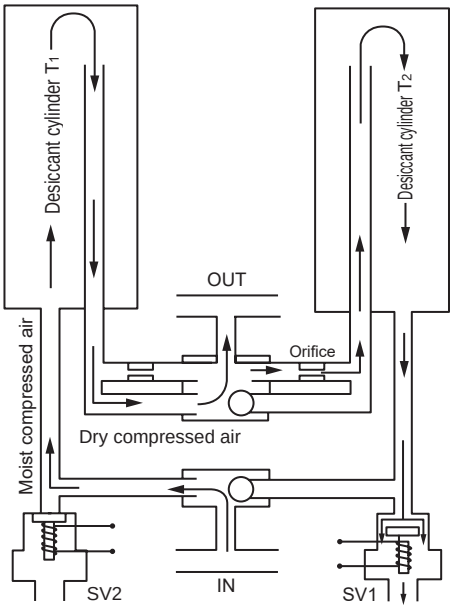

Moist compressed air coming in from IN goes through the shuttle valve and enters desiccant cylinder T_1. The moist compressed air evenly flows within the desiccant cylinder, the water vapor within the moist compressed air is adsorbed by the desiccant, and once transformed into ultra dry air, comes out of the OUTlet via the shuttle valve.
Part of the ultra dry air that has been reduced in pressure via the orifice enters the desiccant cylinder T_2, is used for the regeneration drying of the desiccant of desiccant cylinder T_2, and is then released into the air. With this drying and regeneration process, the switching is performed with a timing motor within the control box and ultra dry air is continuously supplied in a stable manner to the OUT side.

Dimensions

CAD

● HD-0.5 to 4

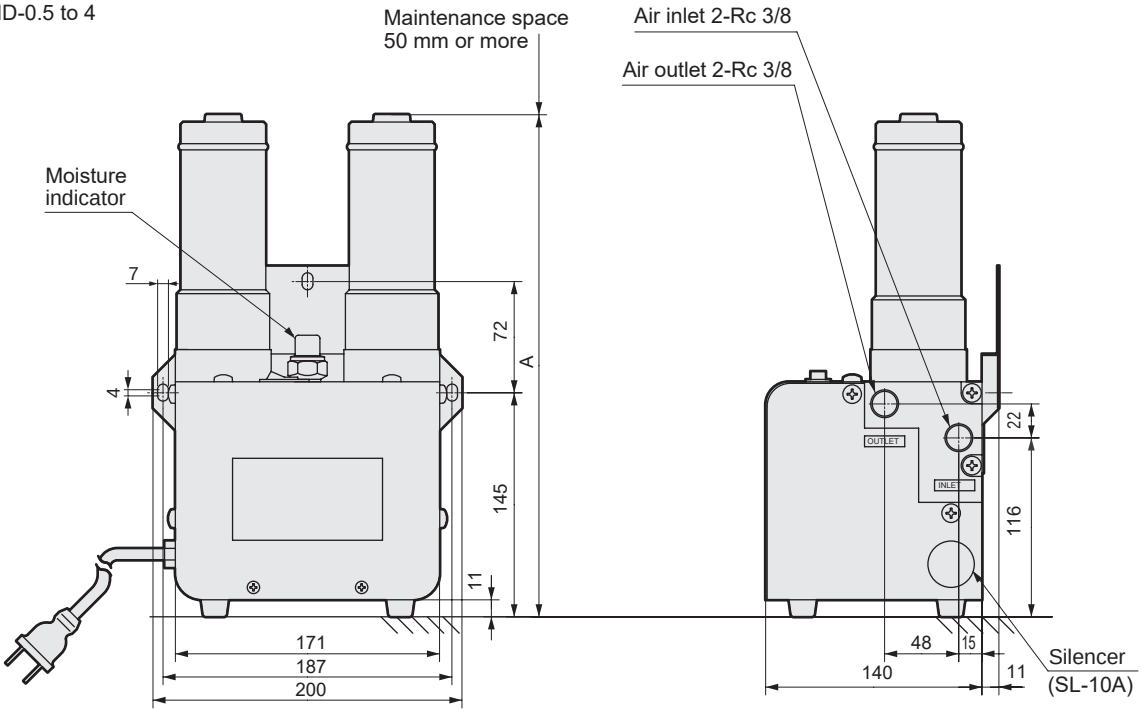

Model No.	Dimension A
HD-0.5	325
HD-1	440
HD-1.5	485
HD-2	467
HD-4	689

Dimensions

● HD-6

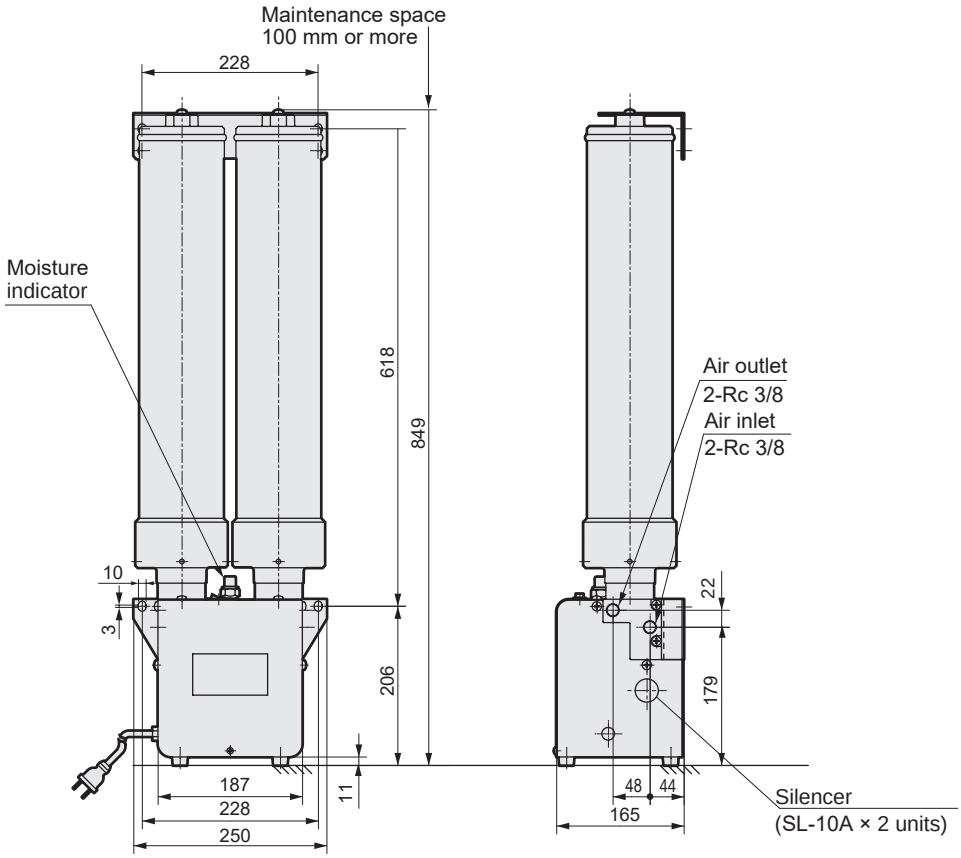

Dimensions

● HD-9

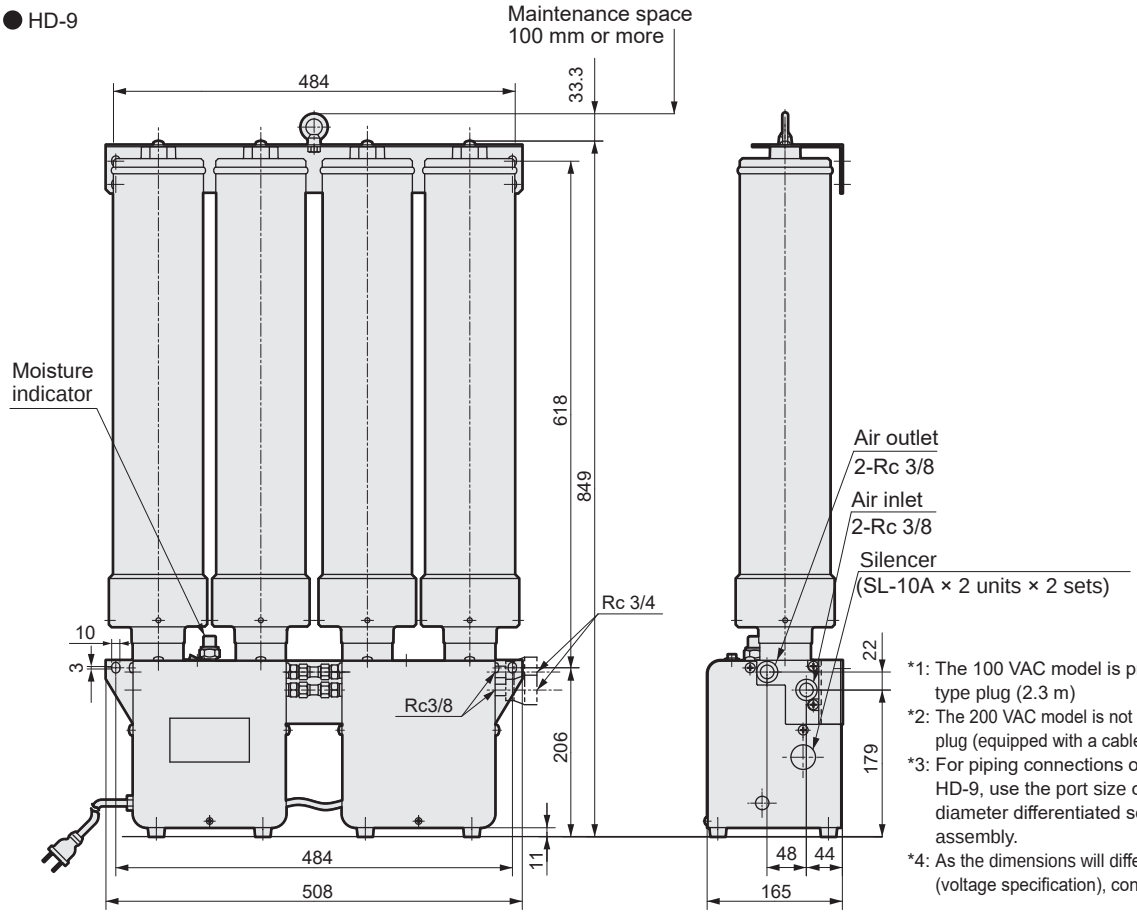

*1: The 100 VAC model is provided with a plug-in type plug (2.3 m)
*2: The 200 VAC model is not provided with a plug-in type plug (equipped with a cable 2.3 m long)
*3: For piping connections of the IN and OUT of HD-9, use the port size of 3/4B with the attached diameter differentiated socket and nipple assembly.
*4: As the dimensions will differ in the case of option G (voltage specification), contact CKD for details.

Earth-friendly heatless type with

Purge flow rate is minimized with the energy-saving dew point monitor (approx. 96% max.).
It also achieves low noise with the original exhaust system.
Super heatless dryer SHD Series with excellent reliability, performance and ease of use.

Energy saving

Reduces unnecessary purge by dew point monitoring

By directly monitoring the outlet air dew point, the switching time of adsorption and regeneration can be variably controlled in response to changes in the dew point. Reduces the purge and achieves the optimum energy-saving operation.

Normal operation

Regardless of the outlet dew point, adsorption and regeneration are switched at 2-minute intervals.

Energy saving operation

If the set dew point is cleared at the time of switching, the state is maintained without switching the desiccant cylinder. When it reaches the set dew point, it switches the cylinder, returns to normal operation and maintains the dew point. The changeover time is up to 60 minutes (in this case, the purge flow rate is reduced by about 96%).

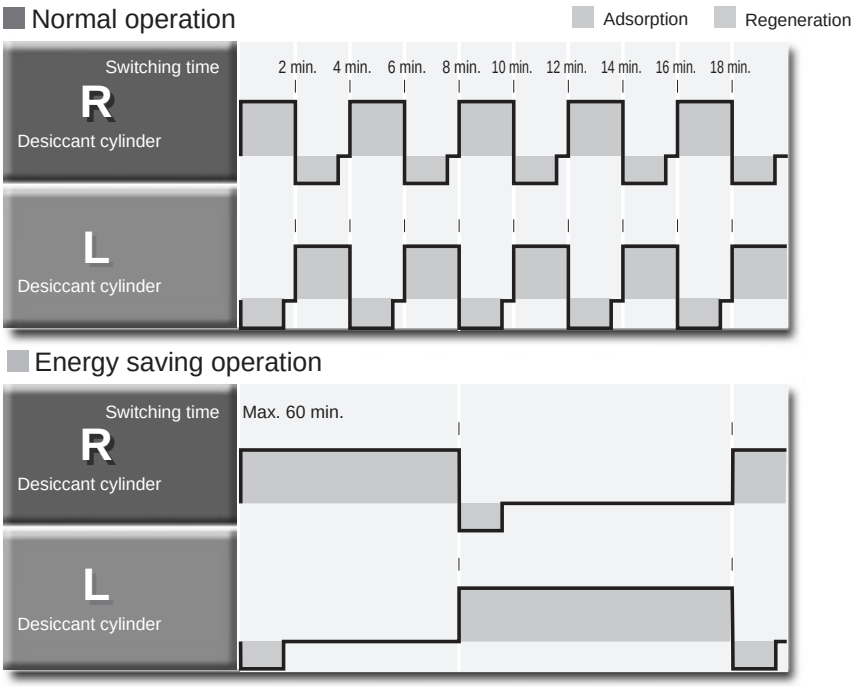

About 13% reduction even in normal operation

The optimum design of the desiccant cylinder reduces the purge rate by 13% even in normal operation.
(compared to CKD conventional products)

Desiccant cylinder switching time and purge reduction rate

Switching time	Purge reduction rate
2 min.	0%
4 min.	50%
10 min.	80%
20 min.	90%
60 min.	96%

Achieves 1/3 lower power consumption

The electronic control system reduces the main power consumption by 1/3.
(compared to CKD conventional products)

Low noise

Significantly reduces noise when switching

The 2-stage exhaust system (PAT.P) achieves a significant noise reduction of about 35dB (A) as compared with conventional products.

Noise reduction

When the noise is reduced by 10db,
human ears perceive the noise to be reduced by half

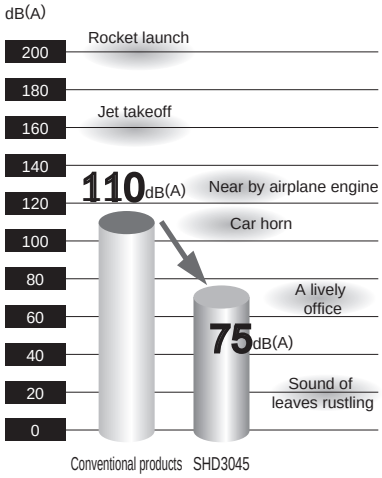



Non-Freon that conforms to ISO14001

improved environmental performance.

Directly manages the pressure dew point using numeric values

Equipped as standard with a dew point sensor. As it digitally displays the pressure dew point, the performance can be confirmed safely and reliably.

Easy maintenance

The desiccant cylinder can be easily removed by rotating it by 45°. Moreover, as the cylinder is locked by a latch mechanism, the safety is excellent.

Stainless steel tower adopted

Non-corrosive stainless steel vessel is used for the desiccant cylinder to improve the supply air quality and reliability.

Air compressor can be connected directly

Refrigeration air dryer is not required on the inlet side. Just one unit reliably maintains performance.

Equipped with filters in the inlet and outlet Standard equipment

AF2000 Series filters are equipped as standard on both the inlet filter for maintaining the performance of the heatless dryer and outlet filter for maintaining the quality of supply air. (Included)
Stainless steel AF4000 and AF5000 Series can be optionally selected.

A wide variety of 16 models is available.

16 models are available, with 8 types of air flow rates (2.5 to 24 m³/minANR) and 2 types of dew point sensors (G: temperature / humidity sensor, M: dew point meter).

Applicable compressor kW	15	22	37	55	75		95	125
Inlet air flow rate m³/min(ANR)	2.5	4.5	7.5	10	12.5	15	20	24
G type	●	●	●	●	●	●	●	●
M type	●	●	●	●	●	●	●	●

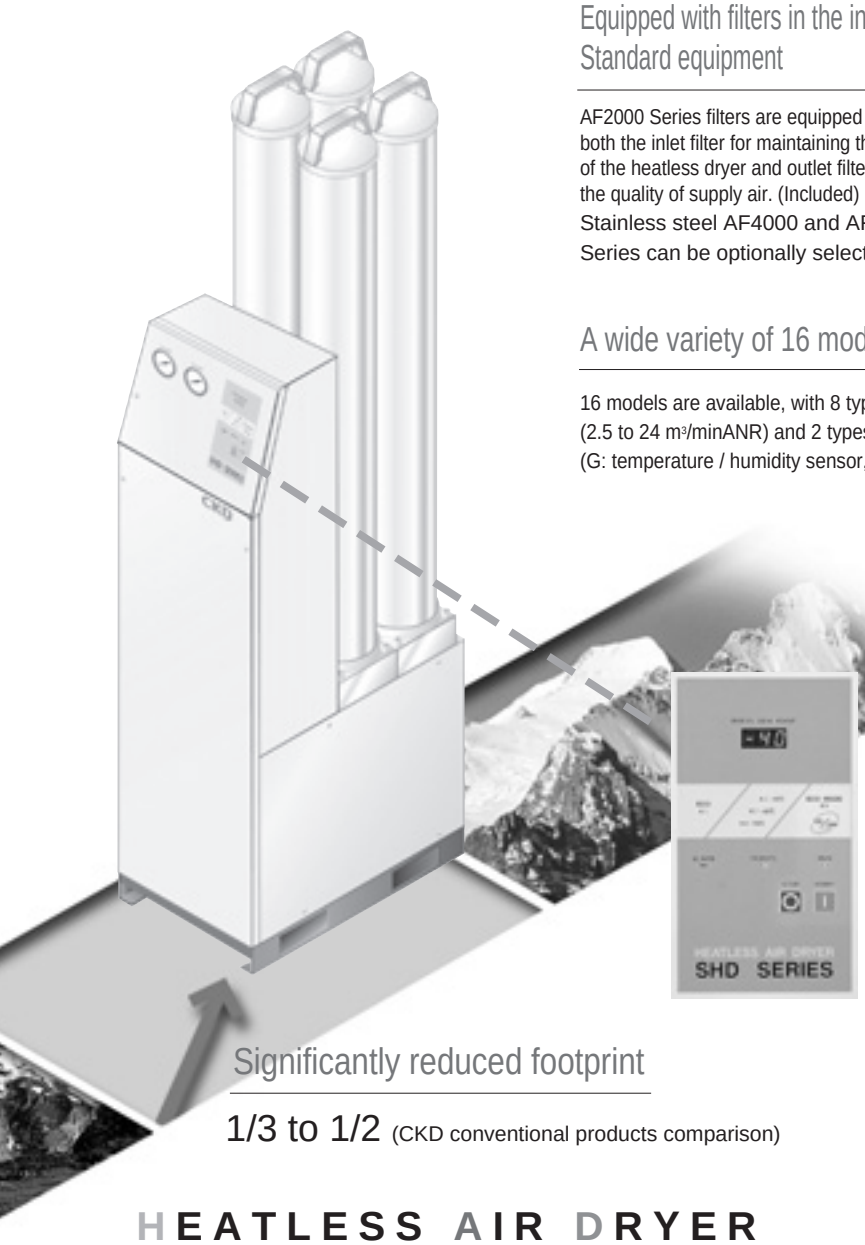

Significantly reduced footprint

1/3 to 1/2 (CKD conventional products comparison)

Operability improved by the electronic control system

Pressure dew point digital display

Also displays dew point abnormalities, sensor abnormalities, etc.

Can be switched between energy saving and normal operation

The energy-saving mode and normal mode can be easily switched manually.

Energy-saving set dew point selectable

The G type has 3 stages of -10, -20 and -40°C, and the M type has 3 stages of -20, -40 and -60°C.
The switch setting can be selected according to the required dew point, making the optimal energy conservation possible.

Allows centralized management in control rooms, etc.

Equipped as standard with remote operation/dew point sensor abnormality output terminal, dew point abnormality output terminal dew point analog output terminal. The operating status of the device can be centrally managed.

ECO display

You will be notified when it enters into energy-saving mode.

Energy-saving rate display

It can display the energy saving rate per 24 hours. It can be used in day-to-day management.

HEATLESS AIR DRYER

SHD 3000



Desiccant air dryer (heatless dryer)

SHD Series

JIS symbol 

Specifications

Item		SHD3025	SHD3045	SHD3075	SHD3100	SHD3125	SHD3150	SHD3200	SHD3240
Working fluid		Compressed air							
Inlet air pressure range MPa		0.4 to 1.0							
Inlet air temperature range °C		5 to 50							
Ambient temperature °C		0 to 40							
Rated conditions	Inlet air temperature °C	35 (no water drops)							
	Ambient temperature °C	25							
	Inlet air pressure MPa	0.7							
	Inlet air flow rate m^3/min(ANR)	2.5	4.5	7.5	10	12.5	15	20	24
	Outlet pressure dew point °C	−20, −40, −60							
	Average purge rate %	-20°C: 14 / -40°C: 16.5 / -60°C: 23							
Desiccant cylinder module quantity		1	2	3	4	5	6	8	10
Regenerating method		Self-regeneration non-heating system							
Desiccant		Activated alumina, synthetic zeolite							
Dew point sensor		G type: Electrostatic capacitance temperature and humidity sensor / M type: Dew point meter (electrostatic capacitance polymer sensor)							
Power supply		Single-phase 100/200 VAC 50/60 Hz							
Power consumption		15 W							
Port size	Rc	1	1	1 1/2	1 1/2	2	2	2 1/2	2 1/2
Weight	kg	120	180	240	300	370	430	550	670
Accessory filter (for inlet side) standard		AF2-05M25A	AF2-08M32A	AF2-11M40A	AF2-13M50A	AF2-13M50A	AF2-20M50A	AF2-24M65A	AF2-24M65A
Accessory filter (for outlet side) standard		AF2-05P25A	AF2-08P32A	AF2-11P40A	AF2-13P50A	AF2-13P50A	AF2-20P50A	AF2-24P65A	AF2-24P65A
Accessory filter (for inlet side) option E2		AF4004M-25	AF4007M-40	AF4010M-40	AF4010M-40	AF4013M-50	AF4020M-50	AF5032M-80	AF5032M-80
Accessory filter (for outlet side) option E2		AF4004P-25	AF4007P-40	AF4010P-40	AF4010P-40	AF4013P-50	AF4020S-50	AF5032P-80	AF5032P-80

*1: The standard paint color is Quality Cool White (Munsell No. 5 GY 7.5/0.5).
*2: Attach the included accessory filters on the inlet side and the outlet side. Filters may be required for the sake of the system.In this case, prepare them separately.
*3: ANR shows conditions of 20°C atmospheric pressure and relative humidity 65%.
*4: “S type” for the outlet of option E2 of SHD3150 only.
*5:AF5032 is used only for option E2 of SHD3200 and SHD3240.
*6:Refer to pages 1845 and 1855 of the catalog for details regarding the accessory filters.
*7:The G type sensor requires regular replacement and the M type dew point meter requires regular calibration. (For details, refer to page 1808.)

Functions

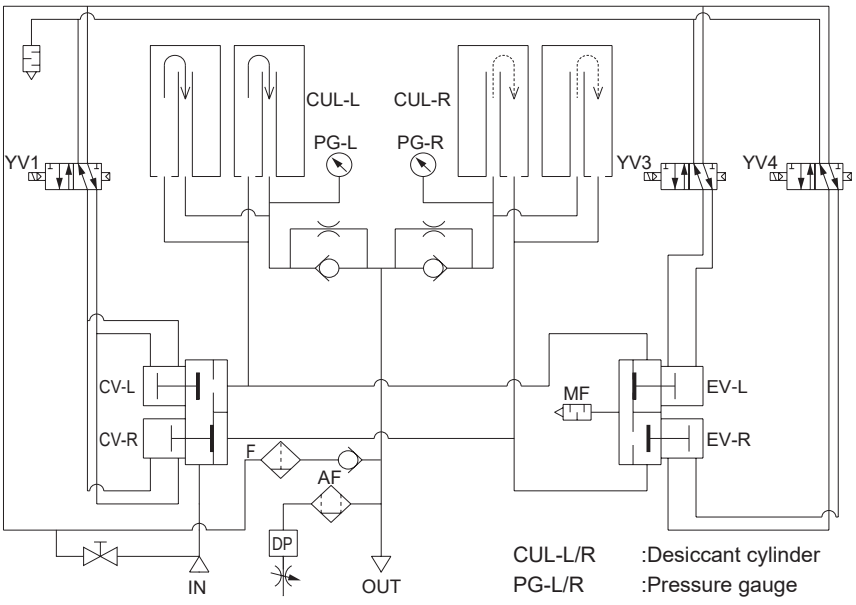

CUL-L/R :Desiccant cylinder
PG-L/R :Pressure gauge
CV-L/R :Inlet switching valve
EV-L/R :Exhaust switching valve
(L/R indicates the left and right sides.)

Moist compressed air coming in from IN goes through valve CV and enters desiccant cylinder CUL-L.The moist compressed air evenly flows within the desiccant cylinder, the water vapor within the compressed air is suctioned by the desiccant, and, once transformed into ultra dry air, comes out of the OUTlet via the check valve. Part of the ultra dry air that has been reduced in pressure via the orifice enters the desiccant cylinder CUL-R, is used for the regeneration drying of the desiccant of CUL-R, and is then released into the atmosphere. Part of the air exiting the OUTlet is guided to the dew point sensor DP for its dew point to be measured. Depending on the dew point, it will be in energy-saving mode in which the switching time is extended. (After the removal process ends, both cylinders are kept in an increased state of pressure and the switching time is extended.)

MF : Silencer
AF : Dew point sensor protection filter
DP : Dew point sensor
YV1 : Valve for inlet switching valve
YV3/4 : Valve for exhaust switching

How to order

SHD3 045 - G 07 - 40 - E3 - AC100V

Model No.

Ⓐ Flow rate classification

Ⓑ Sensor *1

Ⓒ Inlet air pressure

Ⓓ Outlet pressure dew point

Ⓔ Option *3

Ⓕ Voltage

Code	Description
Ⓐ Flow rate classification	
025	2.5m³/min (ANR)
045	4.5m³/min (ANR)
075	7.5m³/min (ANR)
100	10m³/min (ANR)
125	12.5m³/min (ANR)
150	15m³/min (ANR)
200	20m³/min (ANR)
240	24m³/min (ANR)
Ⓑ Sensor	
G	Temperature and humidity sensor
M	Dew point meter
Ⓒ Inlet air pressure	
04	0.4 MPa
05	0.5 MPa
06	0.6 MPa
07	0.7 MPa
08	0.8 MPa
09	0.9 MPa
10	1 MPa
Ⓓ Outlet pressure dew point	
20	-20°C
40	-40°C
60	-60°C
Ⓔ Option	
E1	Without accessory filter
E2	AF4000 Series attached
E3	Standard (AF2 included)
G	Voltage specification
H	English text
L	Foundation bolt nut (SS400)
L1	Foundation bolt nut (SUS304)
Ⓕ Voltage	
100 VAC	
200 VAC	

⚠ Precautions for model No. selection

*1: With "G" type sensor, it is not possible to select the "-60°C" specification for the outlet pressure dew point. In addition, the dew point display value of the "G" type is of an accuracy to serve as a guide, as accuracy will be lowered in particular in the low dew point range. When prioritizing dew point management, use of the "M" type is recommended.

*2: Unit performance may not be attained if used at less than the selected pressure. Always select the model No. for the working pressure.

*3: When ordering several options, indicate the required options in alphabetical order.

[Example of model No.]

SHD3045-G07-40-E3L-AC100V

Model:Super heatless dryer

Ⓐ Flow rate classification :4.5m³/min(ANR)
Ⓑ Sensor :Temperature and humidity sensor
Ⓒ Inlet air pressure :0.7 MPa
Ⓓ Outlet pressure dew point :-40°C
Ⓔ Option :Foundation bolt nut
Ⓕ Voltage :100 VAC

	Dew point sensor	Rated dew point °C (*1)	Energy-saving/settable dew point°C(*2)	
SHD3000 Series	-G	−20	−10	3-step switching
		−40	-20	
			−40	
	-M	−20	−20	3-step switching
		−40	-40	
		−60	−60	

*1: Default setting (Setting purge rate)

*2: Configured by the user
Arbitrary configuration at 3 steps is possible depending on the applications or conditions of use

When the load is smaller than the rating, the unit will enter the energy conservation operating mode at this configured temperature.

Selection guide

Max. flow rate table

Values are with an inlet temperature of 35°C.

Model No.	SHD3025	SHD3045	SHD3075	SHD3100	SHD3125	SHD3150	SHD3200	SHD3240
Inlet air flow rate	2.5	4.5	7.5	10	12.5	15	20	24

*1: The -20, -40, and -60°C specifications will be of the same air flow rate.

Unit: m^3/min (ANR)

● Selection method

The above flow rate table lists values for when the inlet pressure is 0.7 MPa and the inlet air temperature is 35°C. When conditions differ, determine the specifications by using the coefficient table and curve listed below.

Inlet air flow rate = (Inlet flow rate of max. flow rate table (*2)) x (Pressure coefficient) x (Temperature coefficient)
Purge flow rate (*3) = (Inlet flow rate of max. flow rate table (*2)) x (Purge rate for each dew point (*4))
Outlet air flow rate = (Inlet air flow rate) - (Purge flow rate)

*2: These are values from the above table and are values decided based on the model No.
*3: The average value is listed.
*4: 14% for -20°C specifications, 16.5% for -40°C specifications,23% for -60°C specifications.
*5: Abbreviation for PDP (pressure dew point).

Pressure coefficient table (be sure to make a selection with the pressure that will be used)

Inlet air pressure (MPa)	0.4	0.5	0.6	0.7	0.8	0.9	1
Coefficient	0.63	0.75	0.88	1.00	1.13	1.25	1.38

Dew point performance curve

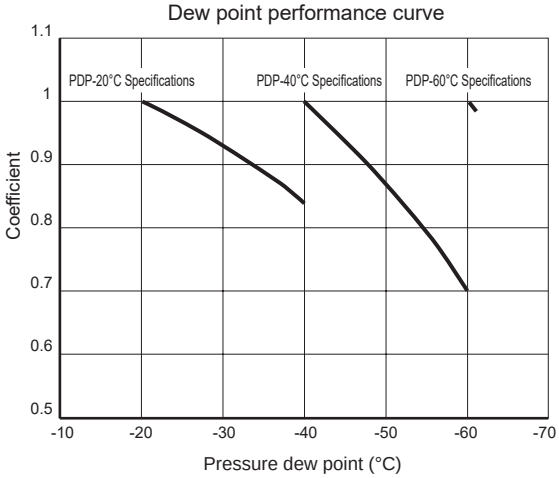

Inlet air temperature-flow rate correction curve

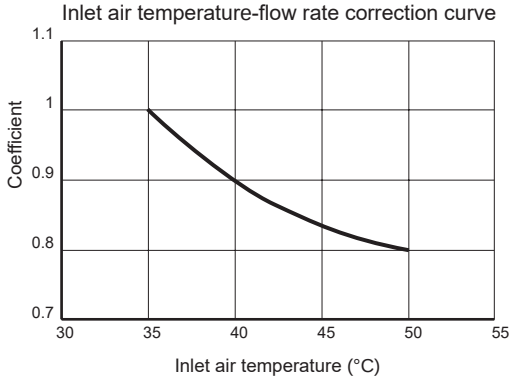

(Example)
Air flow rate of SHD3045 when pressure is 0.6 MPa,
pressure dew point is -40°C, and inlet air temperature is 50°C

Inlet air flow rate = 4.5 x 0.88 x 0.8 = 3.168 m^3/min
Purge flow rate = 4.5 x 0.165 = 0.743 m^3/min
Outlet air flow rate = 3.168 - 0.743 = 2.425 m^3/min

Time chart

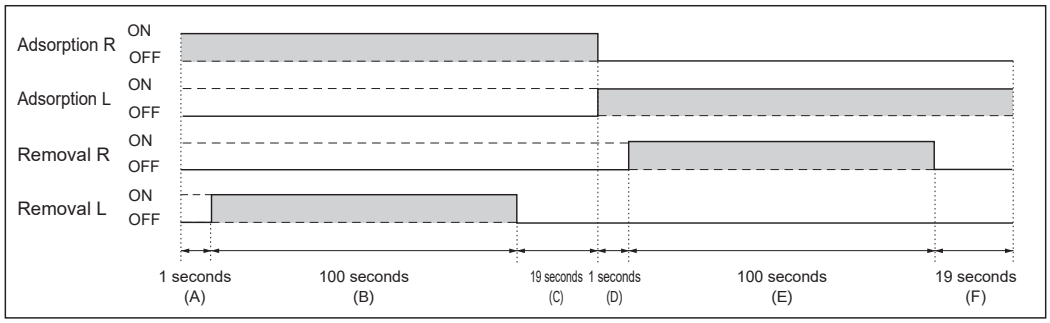

The normal processes are listed on the left. During energy conservation, the state (C, F) after the removal has been completed will be retained. After this, as soon as the dew point degrades, switching will resume to return to the normal processes.

B and E indicate removal (regeneration) time; C and F indicate rising pressure time.

When a heatless dryer is installed

● Model numbers SHD3075 through SHD3240 come provided with a class-2 pressure vessel certificate.
Keep this while using the components. (Applications to the Labor Standards Supervision Office are no longer required in Japan.)

● When starting a test after the installation of this unit, operate the unit for the period of time designated below with a flow rate that is approximately 10 to 20% of the flow rate that will be used.

Pressure dew point (°C) (*6)	-20	-30	-40	-60
(Reference) Atmospheric dew point (°C)	-40	-48	-57	-74
Time (h)	6	12	24	72

*6: The pressure dew point is for when the pressure is 0.7 MPa.

Dimensions

Operation panel

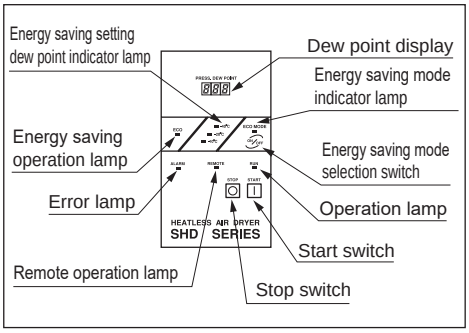

Piping system

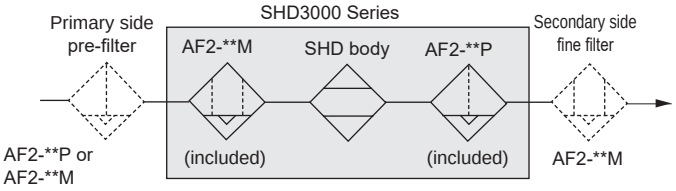

Assuming use with a line of a lubrication air compressor, although the SHD3000 Series is included with the AF2-**M type for the primary side of the heatless dryer and the AF2-**P type for the secondary side, as needed, separately install a primary side pre-filter or a secondary side fine filtration filter. Furthermore, in cases when the AF4000 or 5000 Series has been selected with the options, select the AF4000 or 5000 Series for the filter to install separately as well.

Filter performance

	AF2-**P	AF2-**M	AF4000P AF5000P	AF4000S	AF4000M AF5000M
Filtration (μm)	1	0.01	5	1	0.01
Secondary side oil concentration (mg/m³)	0.6	0.01	–	–	0.01

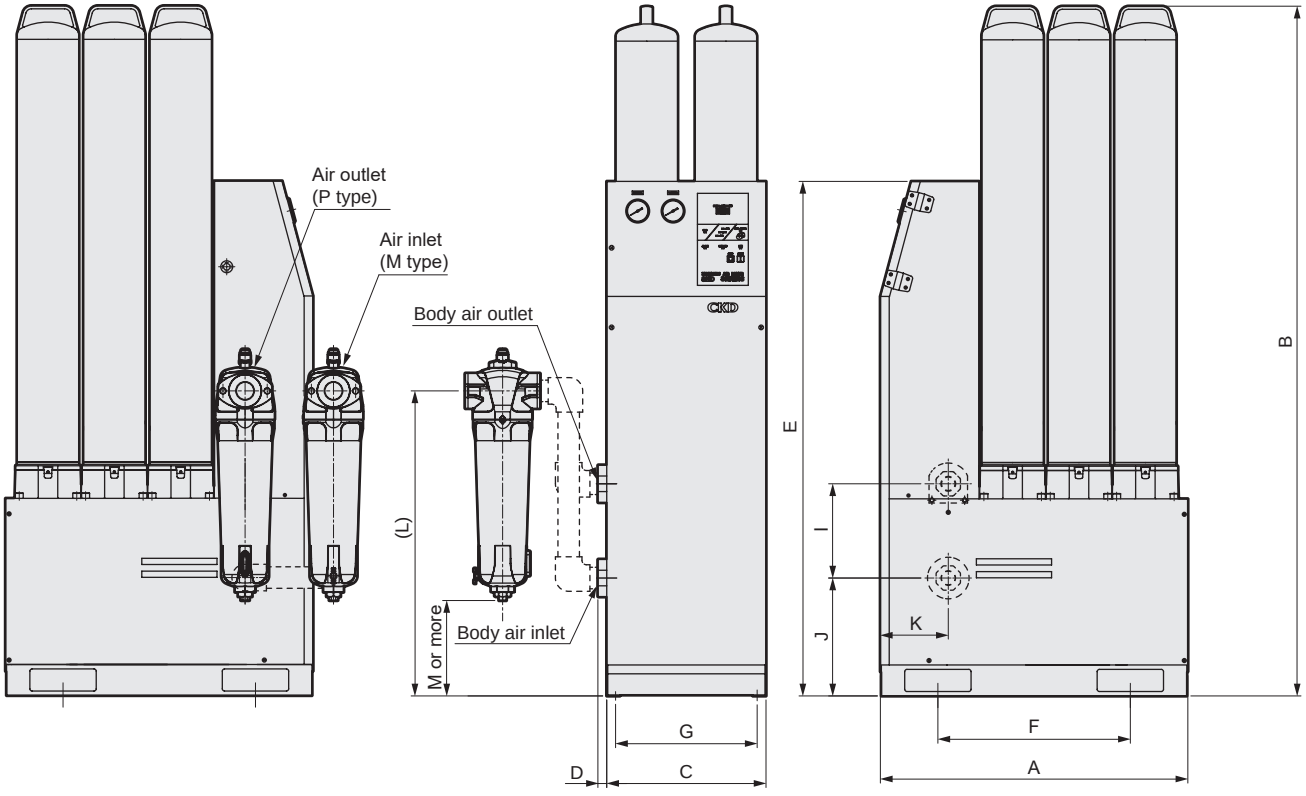

* The figure shows AF2.

Model No.	Port size	A	B	C	D	E	F	G	H	I	J	K	L	M	L (Option E2)	M (Option E2)
SHD3025	Rc1	545	1559	360	20	1163	285	320	ø12	213	266.5	153.5	410	70	570	126
SHD3045	Rc1	545	1559	360	20	1163	285	320	ø12	213	266.5	153.5	500	70	730	212
SHD3075	Rc1 1/2	695	1559	360	20	1163	435	320	ø12	213	266.5	153.5	591	100	940	314
SHD3100	Rc1 1/2	845	1559	360	20	1163	585	320	ø12	213	266.5	153.5	683	100	940	314
SHD3125	Rc2	995	1589	360	20	1193	590	330	ø15	213	296.5	153.5	683	100	1100	387
SHD3150	Rc2	1145	1589	360	20	1193	700	330	ø15	213	296.5	153.5	683	100	1420	550
SHD3200	Rc2 1/2	1445	1589	360	20	1193	780	330	ø15	213	296.5	153.5	810	120	1255	–
SHD3240	Rc2 1/2	1745	1589	360	20	1193	780	330	ø15	213	296.5	153.5	810	120	1255	–

The piping illustrated with the broken lines in the figure is not included with the product. Customers are asked to prepare as necessary. The filters are included with the product. Install the M type on the inlet side and the P type on the outlet side. Filters may be required for the sake of the system. In this case, prepare them separately.
The M dimension shows the min. dimension required to remove the element. Allow for the auto-drain piping dimensions when actually laying the pipe.

Manual air dryer
4001/4002

■ Refining and pressure adjusting components/main line unit/desiccant air dryer

Overview

Desiccant is used in this air dryer. Self regeneration function of desiccant is available for low pressure below 0.1 MPa. As there is a limit to the moisture absorption capacity, use this unit with low flow rate applications (280 ℓ/min or less).

Features

(1) Atmospheric dew point of max. -72°C
(2) Easy desiccant replacement
(3) Just mount it, no power source needed



CONTENTS

● 4001/4002 1804
⚠ Safety precautions 1805

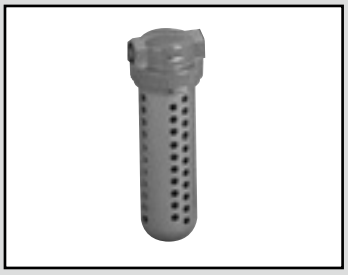

Manual air dryer (desiccant)

4001/4002 Series

Stable supply of ultra dry air with atmospheric dew point -72°C.

● Processing air flow rate: 280 ℓ/min (ANR) or less

RoHS CAD

Specifications

Item	4001-2C	4002-2C
Max. working pressure MPa	1.0 *1	
Proof pressure MPa	1.5 (≈220 psi, 15 bar)	
Inlet air temperature range °C	5 (41°F) to 32 (89.6°F)	
Ambient temperature °C	5 (41°F) to 65 (149°F)	
Atmospheric dew point °C	-43 (-45.4°F)	
Max. flow rate ℓ/min(ANR)	280 (at 0.7 MPa (≈100 psi, 7 bar)) *2, *3	
Desiccant	Silica gel	
Port size Rc	1/4	1/4
Weight kg	4.6	10

*1: The working pressure of 4002-2C is 0.2 MPa to 1.0 MPa.
*2: The max. flow rate at 0.7 MPa inlet air pressure calculated with the atmospheric pressure conversion value.
*3: The min. flow rate required for 4002-2C is 30 ℓ/min (ANR).

How to order

4001 - 2C - ○

Ⓐ Model No.
Ⓑ Port size
Ⓒ Accessory code

Code	Description
Ⓐ Model No.	
4001	1 station
4002	2 stations
Ⓑ Port size	
2C	Rc1/4(8A)
Ⓒ Accessory code	
U	For low dew point
X	For oil removal

Functions

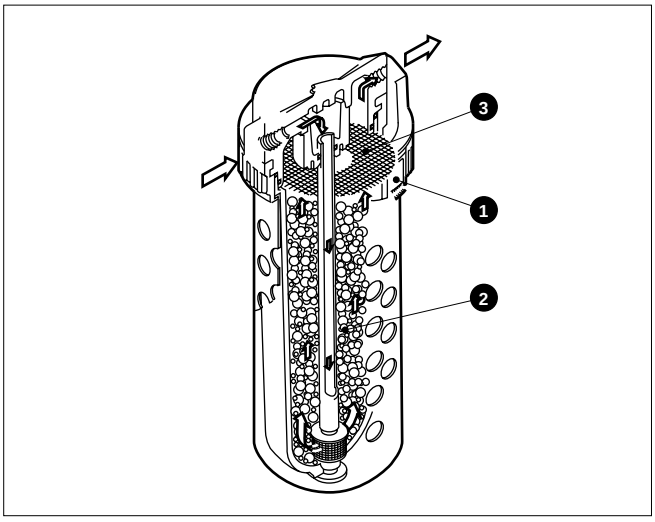

(1) Clamp ring
Push-in clamp ring for easy replacement of desiccant.

(2) Desiccant
Silica gel (atmospheric dew point: -43°C) and other molecular sieves (atmospheric dew point: -72°C) are provided as desiccant. Very small holes of these desiccants trap moisture from the passing compressed air, which is known as capillary action, and thus dry the compressed air.

(3) Screen
Desiccant prevents scattering due to air flow.

Performance list

Model No.	Atmospheric dew point	Max. inlet air temperature	Max. flow rate	Desiccant	Desiccant No.	Remarks
4001-2C 4002-2C	-43°C	32°C	280 ℓ/min(ANR)	Silica gel	4001-SILICA-GEL	Non-regenerable
4001-2C-U 4002-2C-U	-72°C	32°C	280 ℓ/min(ANR)	4AM.S.	85-060	Non-regenerable
4001-2C-X 4002-2C-X	Oil removal 24 PPM W/W	32°C	280 ℓ/min(ANR)	13XM.S.	85-061	Non-regenerable

Note: M.S. means molecular sieves.

Dimensions

● 4001-2C

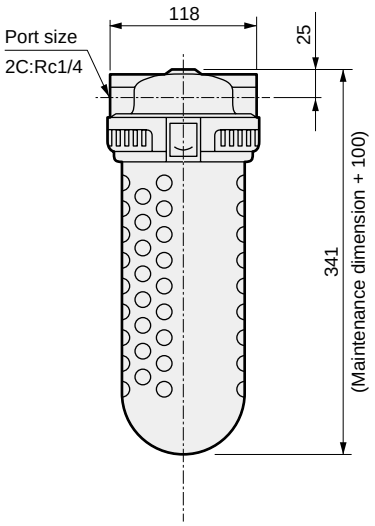

● 4002-2C

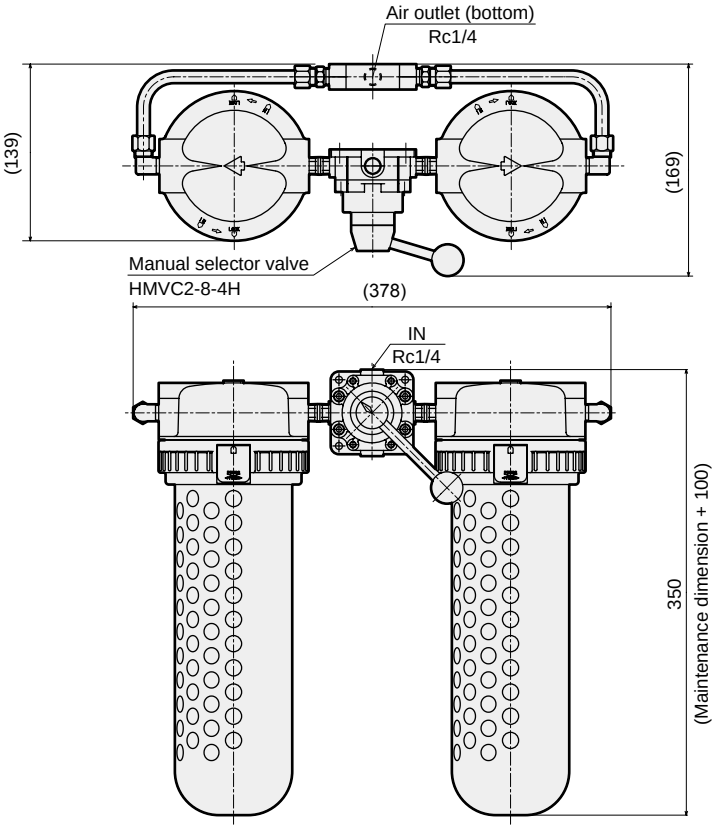

⚠ Safety precautions

- Fill the bowl with desiccant up to just below the screen (approximately 0.8 kg). Be careful not to allow any desiccant to enter the tube.
- Keep the max. flow rate below 280 ℓ/min. Replace the desiccant (silica gel) if it has changed from green to orange. The desiccant adsorbs approx. 100 g of moisture. (Desiccant weight 0.8 kg included)
- Use 4001-2C-U if the atmospheric dew point of -72°C is required. As the color does not change even when moisture is adsorbed, attach a moisture indicator (6119-2C) after 4001-2C-U or 4002-2C-U. Desiccant service life can be checked.
- To remove oil of the compressed air, use 4001-2C-X or 4002-2C-X. The color will change from yellowish brown to blackish brown when oil is adsorbed. Replace it when the color has changed. 113 g of oil content is adsorbed before replacement.
- Avoid direct sunlight.
- Installing an air filter is recommended to obtain cleaner air.
- Carefully prevent water drops from entering the inside. Otherwise heat generation may occur.



Moisture indicator

6119-2C Series

For dew point monitor of desiccant air dryer.

● Port size: Rc1/4

RoHS

Specifications

1 MPa ≈ 145.0 psi, 1 MPa = 10 bar

Item	6119-2C
Max. working pressure MPa	1.0 (≈145 psi, 10 bar)
Proof pressure MPa	1.5 (≈217 psi, 15 bar)
Fluid temperature °C	5 (41°F) to 65 (149°F)
Max. inlet air temperature °C	32 (89°F)
Max. flow rate ℓ/min (ANR)	50
Port size Rc	1/4
Weight kg	0.2

Internal structure and parts list

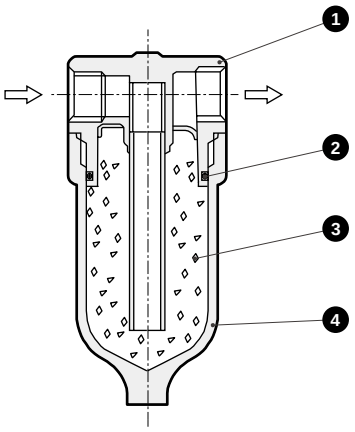

No.	Main part	6119
1	Body	Zinc die-cast

Parts list

No.	Part name	Material	Model No.
2	O-ring	Special nitrile rubber	A1019-ORING
3	Silica gel	Silica gel	6119-SILICA-GEL (20 g)
4	Bowl	Polycarbonate	A3019-BOWL

Dimensions

6119-2C

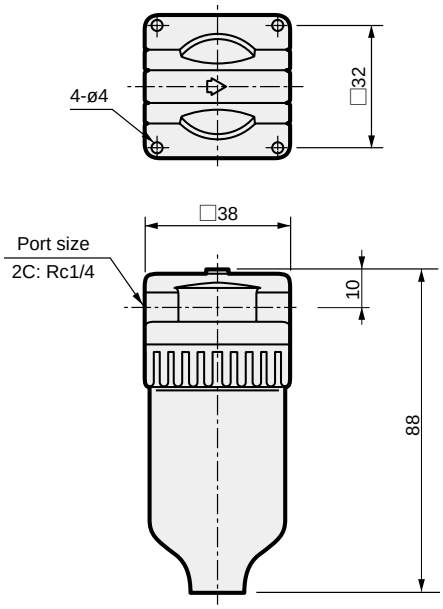

● Wall bracket: 6506

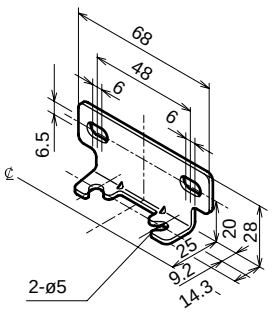

* Tapping screw included

Operational principle

Through the moisture indicator, the dew point of ultra-dry air is monitored using the chemical properties of silica gel whose color changes from blue to pink after moisture is absorbed.
If relative humidity in compressed air reaches 50%, the color changes to orange, so maintenance of the desiccant air dryer is easy.

⚠ Safety precautions

Avoid using in a place where the working air flow can increase or decrease vigorously or where the max. flow rate is exceeded.
The silica gel could flow to the secondary side.

Pneumatic components (main line components)

Safety Precautions

Be sure to read this section before use.
Refer to Intro Page 63 for general precautions.

Product-specific cautions: Heatless dryer

Manufacturer's Exemption of Liability

⚠WARNING

■ The manufacturer cannot be held liable in the following cases:
- In the case where there are serious errors in the operator's use.
- Inappropriate modifications or repairs using nonstandard parts, made by the user.

Design/selection

⚠WARNING

■ Avoid direct sunlight and rainwater. The resin parts, etc., could deteriorate and break.

■ Do not use in locations with corrosive gases.

■ Use this product within the operating ambient temperature.

■ Do not use in locations at risk of freezing.
The accumulated condensation water could freeze and damage the product.

■ Do not use in hazardous locations (possibly explosive atmospheres, etc.).

■ Do not use this product in an ozone generating environment.

■ We recommend keeping the inlet air temperature as low as possible. Adsorption performance of desiccants will be lower at high temperature.

■ Do not use when the inlet air contains corrosive gas, chemical solutions, organic solvents, or combustible gas.

■ Carefully prevent water drops from entering the inside.

■ The dew point value indicated by G type of the SHD Series can be used as a guide, but the accuracy is low especially in the low dew point range.
Use M type for accurate dew point monitoring.

Mounting, installation and adjustment

⚠CAUTION

■ "Class 2 pressure vessel" of the "safety regulation of boiler and pressure vessel" of Occupational Safety Sanitation Act applies to model No. SHD3075 to SHD3240.

■ Model numbers SHD3075 to SHD3240 have a Class 2 pressure vessel withstand pressure proof certificate. This certificate must be kept safely while using this device. (Application to the Labor Standards Supervision Office in Japan is not required.)

■ This device may only be used in Japan.
(Contact CKD for use overseas.)

■ Install this device on a stable, flat surface not subject to vibration.

■ Do not step onto this main unit.

■ Secure enough space for maintenance and inspection. (600 mm and over in front, sides and back)

■ Stainless steel pipes or galvanized pipes (white pipe) are recommended as piping materials. Flush the pipes before connecting them.

■ Use a forklift to carry the product. Pass the forks of forklift through the forklift hole.
(Excluding compact HD Series)

■ Do not block the forklift hole since it also discharges regenerated air. (SHD Series only)

■ Establish a ground connection.

■ Filters are supplied with SHD Series.
Install the supplied oil removing filter (M type) on the primary side (inlet side) and the supplied dust filter (P type) on the secondary side.
If the inlet air is low quality, add a filter before the M type. Additional filters may be necessary if customer requires higher air quality.

■ Filters are not supplied with other series (HD Series) than SHD Series.
Select filters appropriate for the system, purchase and install them as a separate order.

■ Install a filter as close as possible to the dryer.

Use/maintenance

Operation

⚠CAUTION

- Use within the working pressure range.
- Use within the power voltage range in the specifications.
- Energy-saving operation can be set with the “ECO MODE” ON/OFF button as desired. (SHD Series only)
- Keeping a constant dew point is not possible if the working air flow rate changes significantly.
- Leakage may occur from the silencer, though rarely, depending on the air intake condition and ambient temperature. If it occurs, place a drain pan underneath.

Inspection/maintenance

⚠CAUTION

- The replacement timing for the desiccant will differ depending on the working conditions and required dew point. It is preferable that the desiccant be replaced when degradation of its performance is observed in dew point monitoring. Normally replacement is approximately 2 years.
- Desiccants may adsorb various substances other than moisture contained in the compressed air. Always dispose of used desiccants as industrial waste in an appropriate manner.
- Replace the silencer if the pressure of regeneration chamber has exceeded 0.05 MPa or when one year has passed from the beginning of use.
- It is preferable that the humidity sensor for G type of the SHD Series be replaced once a year. (It cannot be calibrated.)
  As for the dew-point meter for M type, calibration once a year is recommended.
  In extreme conditions, more frequent replacement and calibration will be necessary.

Repair parts

⚠CAUTION

- Periodically check the parts for deterioration and replace them as necessary to use the product safely through its service life. Refer to the instruction manual included with the product for details.

Regular maintenance parts

⚠CAUTION

- Periodically inspect the regular maintenance parts and replace them according to the standard replacement frequency to use the product safely through its service life.
  Refer to the instruction manual included with the product for details.

High polymer membrane air dryer
(Super dryer)

■ **Refining and pressure adjusting components/main line units**

Overview

The super dryer is a high polymer membrane high-tech dryer. Without using electricity, moisture is removed from humid air by using a membrane to supply dry air. Realizes convenience and high reliability never achieved before.

Features

(1) Freon-free dryer
Freon-free dryer which is ozone safe.

(2) Electricity-free
No electricity is used.

(3) Noise-free
As it does not use electricity, there is no noise or effects thereof.

(4) No movable parts
No movable parts enables clean dry air to be supplied for long periods of time.

(5) Space-saving/simple installation
Achieving compact/lightweight, and easily installed into device.

(6) Low dew point equivalent to that of desiccants
Ultra low dew point of max. -60°C.

(7) Industry first, available up to 75 kW
Compatible with 75 kW grade large flow rate air compressors.

CONTENTS

Series variation	1810
Product introduction	1812
Super dryer (High polymer membrane air dryer) SU300E/SU400E/SD300E/SD400E-W	1814
Super dryer (High polymer membrane air dryer) SU300D/SU400D/SD300D/SD400D-W	1818
Super dryer (High polymer membrane air dryer) SU3000/SU4000-W	1822
Super dryer (High polymer membrane air dryer) SD3000/SD4000	1825
Super dryer modular series SDM4000	1828
Technical data	1831
⚠ Safety precautions	1832

HiPolymDry

Series variation

High polymer membrane air dryer (Super dryer)

	Standard dew point		Low dew point			
Series	SD300E/400E-W SU300E/400E-W	SD300D/400D-W SU300D/400D-W	SU3000-A-W SU4000-A-W	SU3000-B-W SU4000-B-W	SD3000-A/4000-A	
Features / Applicable air compressor kW	Low purge Purge rate 10% Atmospheric dew point -15°C	High flow rate Purge rate 20% Atmospheric dew point -20°C	Standard dew point unit Atmospheric dew point -20°C	Low dew point unit Atmospheric dew point -40°C	Standard dew point discrete type Atmospheric dew point -20°C	
0.2						
0.4	● (SD301E)			● (SU3015-B)		
0.75	● (SD/SU302E)	● (SD/SU301D)	● (SU3015-A)	● (SU3025-B)	● (SD3015-A)	
1.5		● (SD/SU302D)		● (SU3050-B)		
2.2	● (SD/SU401E)		● (SU3025-A)		● (SD3025-A)	
3.7	● (SD/SU402E)	● (SD/SU401D)	● (SU3035-A)		● (SD3035/4050-A)	
5.5		● (SD/SU402D)	● (SU3050-A)		● (SD3050-A)	
7.5			● (SU3075-A)		● (SD3075/4075-A)	
11			● (SU4100-A)		● (SD4100-A)	
15						
22						
37						
55						
75						
95						
120						
150						
200						
250						
300						
400						
480						
710						
960						
1450						
With common exhaust port	● Option	● Option	● Option	● Option	● Option	
Medium pressure	×	×	×	×	● Standard equipment	
CE	● Standard equipment	● Standard equipment	● Standard equipment	● Standard equipment	● Standard equipment	
Freon-free	● Standard equipment	● Standard equipment	● Standard equipment	● Standard equipment	● Standard equipment	
Power supply not required	● Standard equipment	● Standard equipment	● Standard equipment	● Standard equipment	● Standard equipment	
Drain treatment not required	● Standard equipment	● Standard equipment	● Standard equipment	● Standard equipment	● Standard equipment	
Appearance						
Page	1814	1818	1822	1822	1825	

Note) This list is a selection guideline. For final selection, refer to the relevant page and select a model upon confirming installation and operating conditions.

High polymer membrane air dryer

Series variation

			Large flow rate manifold		
	SD3000-B/4000-B	SD3000-C/4000-C	SDM4000		
	Low dew point discrete Atmospheric dew point -40°C	Ultra-low dew point discrete Atmospheric dew point -60°C	Atmospheric dew point -20°C	Atmospheric dew point -40°C	Atmospheric dew point -60°C
		● (SD3015-C)			
	● (SD3015-B)	● (SD3025-C)			
	● (SD3035-B)	● (SD3050-C)			
	● (SD3050-B)	● (SD3075/4050-C)			
	● (SD3075/4050-B)	● (SD4075-C)			
	● (SD4075-B)	● (SD4100-C)			● (SDM4050-2-C)
	● (SD4100-B)			● (SDM4050-2-B)	● (SDM4075-2-C)
			● (SDM4050-2-A)	● (SDM4075-2-B)	● (SDM4075-3-C)
			● (SDM4075-2-A)	● (SDM4075-3-B)	● (SDM4100-3-C)
			● (SDM4075-3-A)	● (SDM4100-3-B)	● (SDM4075-8-C)
			● (SDM4050-6-A)	● (SDM4075-6-B)	● (SDM4075-10-C)
			● (SDM4075-6-A)	● (SDM4075-10-B)	
			● (SDM4100-6-A)		
			● (SDM4100-8-A)		
	● Option	● Option	▲ Custom made	▲ Custom made	▲ Custom made
	● Standard equipment	● Standard equipment	● Standard equipment	● Standard equipment	● Standard equipment
	● Standard equipment	● Standard equipment	● Standard equipment	● Standard equipment	● Standard equipment
	● Standard equipment	● Standard equipment	● Standard equipment	● Standard equipment	● Standard equipment
	● Standard equipment	● Standard equipment	● Standard equipment	● Standard equipment	● Standard equipment
	● Standard equipment	● Standard equipment	● Standard equipment	● Standard equipment	● Standard equipment
					
	1825	1825	1828	1828	1828

7 series and 65 models

Select the best suited model for your application.

Selection guide MAP

Inlet air temperature : 25°C
Ambient temperature : 25°C
Inlet air pressure : 0.7 MPa

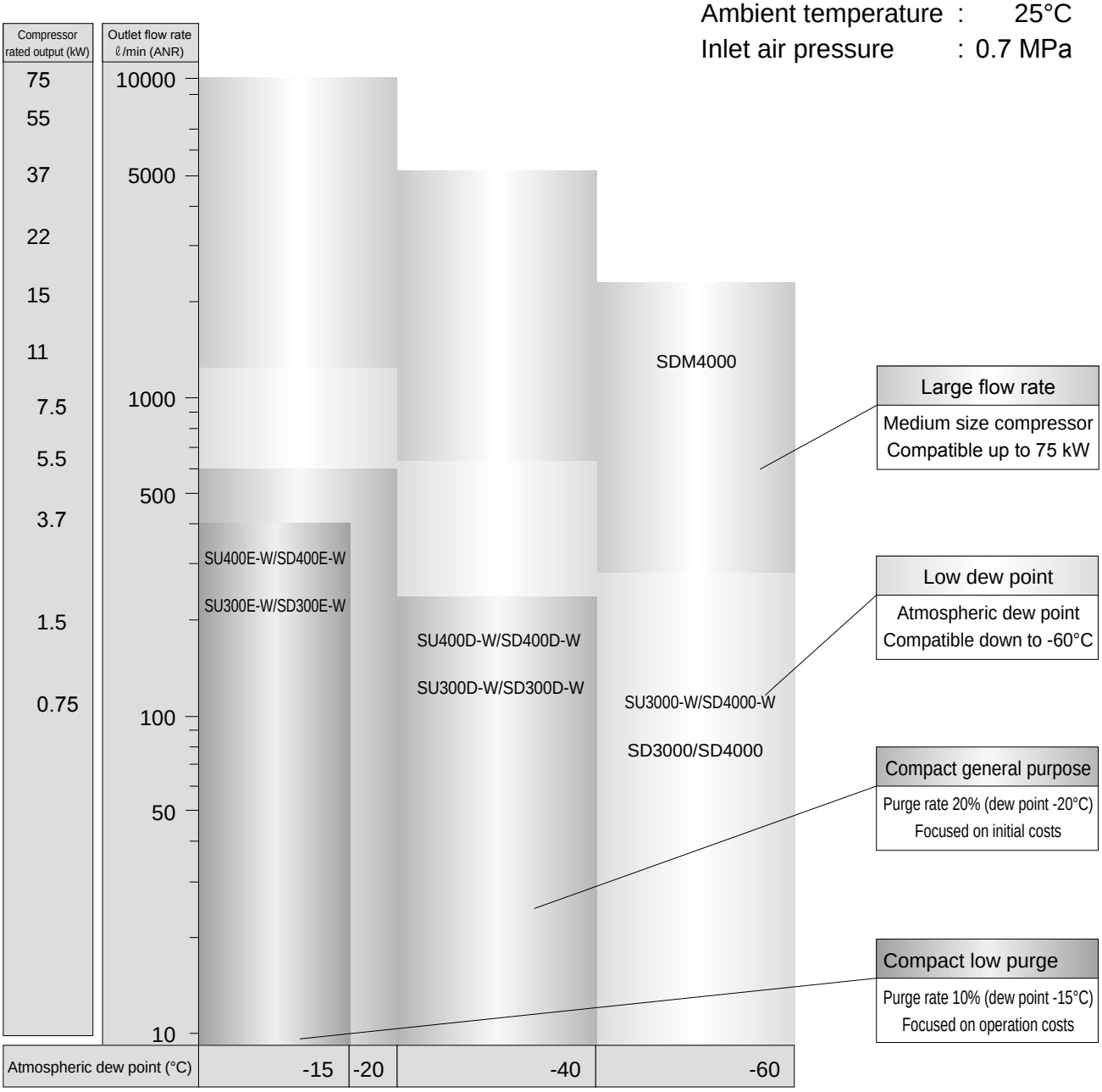

Compact low purge		Compact general purpose		Low dew point		Large flow rate
E Series (purge rate 10%)		D Series (purge rate 20%)				
SU300E-W/SU400E-W	SD300E-W/SD400E-W	SU300D-W/SU400D-W	SD300D-W/SD400D-W	SU3000-W/SU4000-W	SD3000/SD4000	SDM4000
				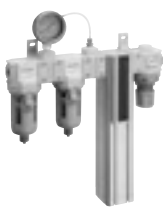		

The innovative super dryer series is a high-tech dryer that incorporates a high polymer membrane.

Unprecedented ease of use, long service life, and high reliability are realized.

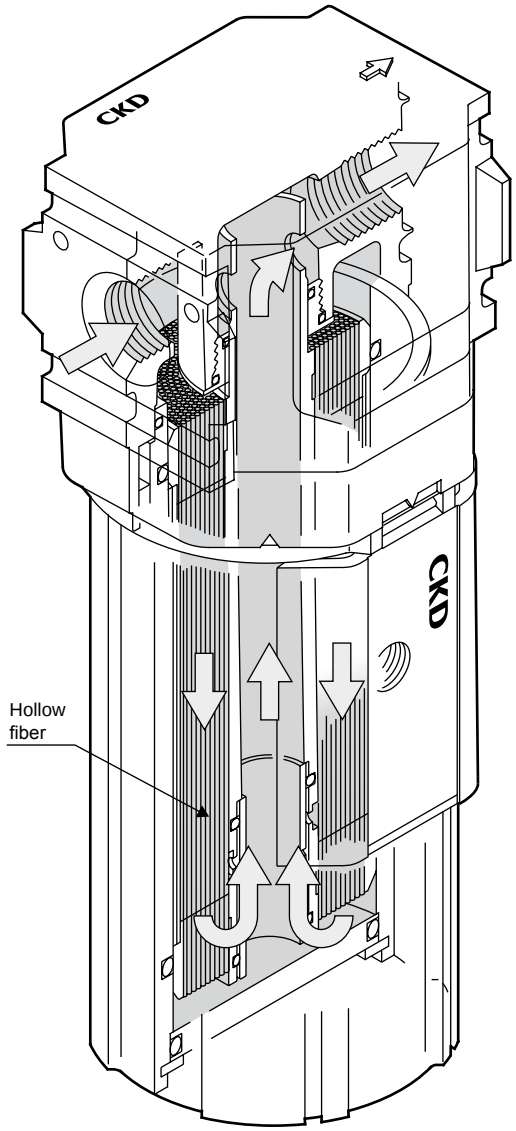

Pursuing ease of use

■ Handy preassembled unit

Super dryer (High polymer membrane air dryer) with integrated pre-filter, etc., is available. Easily used by just connecting directly to the pneumatic source.

■ Modular design

CKD original modular concept allows easy connections with CKD clean air units, reduces design and piping hours and enables systems to be upgraded easily.

■ Amenity

The unpleasant effects of conventional air dryers, such as vibration, heat discharge, power source noise, impact noise, and dust generation, have been eliminated.

■ No power supply needed

Electricity is not required, so expertise in electricity is not required when installing the dryer. The dryer can be installed anywhere including explosion-proof areas with different voltages.

■ No more problems

There are no mechanical moving parts, so no need for concern about unexpected failures. Clean dry air is stably supplied for long periods of time.

Diverse series to match applications

■ Low purge Purge rate 10%

Reduces operation costs through energy-saving moisture removal with an atmospheric dew point of -15°C and a purge ratio of 10%. [E Series]

■ Low dew point Atmospheric dew point -60°C

Clean ultra dry air can be supplied easily and stably.
[3000 and 4000 Series]

■ Large flow rate Compatible with 75 kW compressor

Large flow rate is achieved with a polymer separation membrane.
In addition, compared to suction air dryers, this unit is very compact and slim at 1/3 of installation area and 1/6 of the occupied volume of our conventional products. [SDM Series]

■ Compatible with medium pressure Max. working pressure 1.5 MPa

Available with max. working pressure of 1.5 MPa and a wide range of applications.
[SD3000/4000 Series, SDM Series]

■ Principle of dehumidification

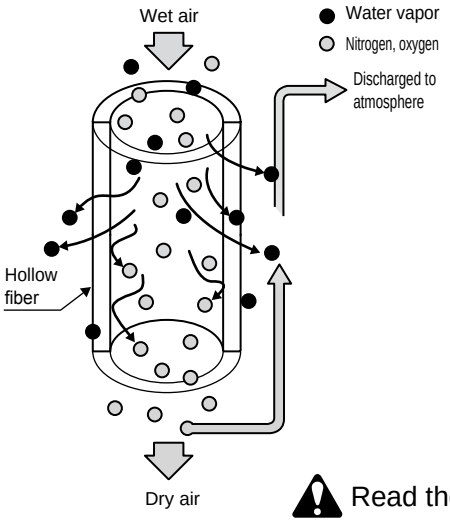

The gaseous molecules can freely pass through the high polymer material, but the ease of passage varies widely according to the mutual properties of the gas and the high polymer material being used.
In order to remove water vapor only, the super dryer uses a high polymer material which allows water vapor, but not nitrogen or oxygen, to pass through easily.
Since the concentration of each gas is high inside the hollow fibers of this material, gases try to move toward the outside of the hollow fibers where concentration is lower when fed with moist compressed air.
The hollow fibers are made of material that allows water vapor to pass through easily, so that only water vapor moves toward the outside of the hollow fibers. Moist air supplied from the inlet leaves the outlet as dry air.
By having part of the outlet's dry air flow toward the outside of the hollow fibers as purge air, water vapor moved to the outside is quickly discharged into the atmosphere. This keeps the concentration of water vapor on the outside of the hollow fibers low, enabling continuous dehumidification.

⚠ Read the precautions on pages 1832 and 1833 before use.



Super dryer combination Super dryer (High polymer membrane air dryer)

SU300E/SU400E/SD300E/SD400E-W Series

E Series, with small air loss and filter-like usability

- Reduces operation costs through energy-saving moisture removal with a purge ratio of 10%.
- 3 types of units are available. Appropriate system is available according to applications.
- Processing air flow rate: 75 to 450 ℓ /min. (ANR) (0.7 MPa, atmospheric dew point -15°C)

RoHS CAD

Specifications

1 MPa ≈ 145.0 psi, 1 MPa = 10 bar

Item		SU301E -*-W-C1	SU302E -*-W-C1	SU401E -*-W-C1	SU402E -*-W-C1	SU301E -*-W-C2	SU302E -*-W-C2	SU401E -*-W-C2	SU402E -*-W-C2	SU301E -*-W-C3	SU302E -*-W-C3	SU401E -*-W-C3	SU402E -*-W-C3	SD301E -*-W	SD302E -*-W	SD401E -*-W	SD402E -*-W
Appearance		 Simple & space saving structure unit that removes moisture from the air from which solid impurities have already been removed. (*1)				 Unit supplying clean dry air with line not requiring pressure adjustment.				 A unit that supplies pressure-adjusted clean dry air just by supplying compressed air.				 Discrete super dryer (High polymer membrane air dryer) enabling easy system configuration with peripheral devices due to modular design.			
Configuration		Oil mist filter Super dryer (High polymer membrane air dryer)				Air filter Oil mist filter (with differential pressure gauge) Super dryer (High polymer membrane air dryer)				Air filter Oil mist filter (with differential pressure gauge) Super dryer (High polymer membrane air dryer) Regulator				Super dryer (High polymer membrane air dryer)			
Range of working conditions	Working fluid	Compressed air															
	Inlet air pressure MPa	0.4 (≈58 psi, 4 bar) to 1.0 (≈150 psi, 10 bar)															
	Proof pressure MPa	1.5 (≈220 psi, 15 bar)															
	Inlet air temperature °C	5 (41°F) to 50 (122°F)															
	Ambient temperature °C	5 (41°F) to 50 (122°F)															
Standard rating	Outlet air atmospheric dew point °C	-15 (5°F)															
	Inlet air flow rate ℓ/min(ANR)	75	150	300	450	75	150	300	450	75	150	300	450	75	150	300	450
	Outlet air flow ℓ/min(ANR)	67	135	270	405	67	135	270	405	67	135	270	405	67	135	270	405
	Purge flow rate ℓ/min(ANR)	8	15	30	45	8	15	30	45	8	15	30	45	8	15	30	45
	Inlet air pressure dew point °C	25 (77°F)															
	Inlet air pressure MPa	0.7 (≈100 psi, 7 bar)															
	Inlet air temperature °C	25 (77°F)															
	Ambient temperature °C	25 (77°F)															
Air filter	Filtration rating μm	—				5								—			
Oil mist filter	Oil removal mg/m³	0.1 (approximately 0.1 ppm) (when the inlet air is 30°C (86°F))												—			
Regulator	Set pressure range MPa	—								0.05 to 0.85				—			
	Relief pressure MPa	—								Setting pressure plus 0.05				—			
Standard accessories		Bracket				Differential pressure gauge/bracket				Press gauge/diff press gauge/bracket				—			

*1: An oil mist filter cannot be controlled with a differential pressure gauge for C1. Replace the oil mist filter mantle every year.
*2: Purge flow rate in standard rating section is also the same value at 0.5 MPa.

JIS symbol

SD301E to 402E-*



SU301E to 402E-*-C1

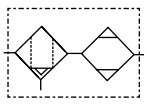

SU301E to 402E-*-C2

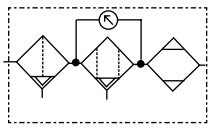

SU301E to 402E-*-C3

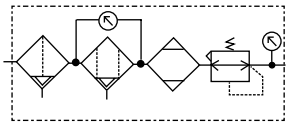

Dew point performance

Refer to page 1831 for selection guide and compensation method.

● Dew point performance curve

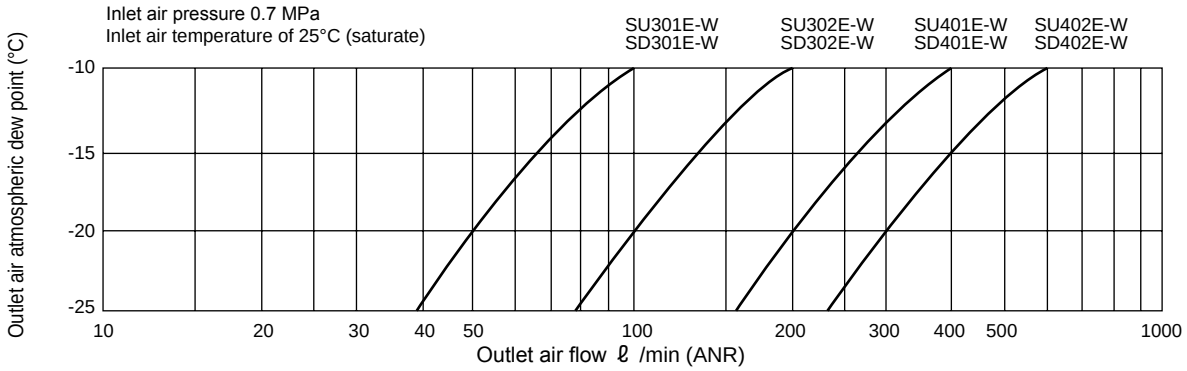

Inlet pressure - outlet air flow rate correction curve

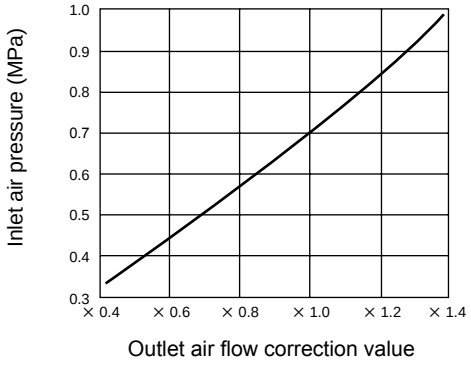

Inlet temperature - outlet air flow rate correction curve

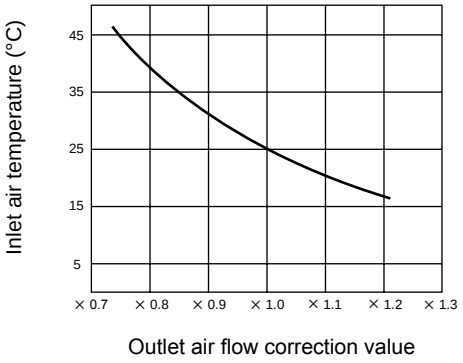

How to order

● Super dryer Combination

SU301E - 05 - W - C1 - X1

Ⓐ Model No.

Code	Description
Ⓐ Model No.	
SU301E	
SU302E	
SU401E	
SU402E	

Ⓑ Inlet air pressure

Code	Description
Ⓑ Inlet air pressure	
05	0.5 MPa (*1)
07	0.7 MPa (*1)

Ⓒ Unit

Code	Description
Ⓒ Unit	
C1	
C2	
C3	

Ⓓ Option *5

Code	Description
Ⓓ Option	
Blank	None
E	Common exhaust (*4)
X1	Rev. inlet/outlet (*3)

● Super dryer (High polymer membrane air dryer)

SD402E - 05 - W - B

Ⓐ Model No.

Code	Description
Ⓐ Model No.	
SD301E	
SD302E	
SD401E	
SD402E	

Ⓑ Inlet air pressure

Code	Description
Ⓑ Inlet air pressure	
05	0.5 MPa (*1)
07	0.7 MPa (*1)

Ⓒ Option *5

Code	Description
Ⓒ Option	
Blank	None
B	With C type bracket (*2)
E	Common exhaust (*4)
X1	Reversed inlet and outlet (*3)

⚠ Precautions for model No. selection

*1: If inlet air pressure is less than 0.7 MPa, indicate 05, while 0.7 MPa and over, indicate 07.
*2: If fixed by C type bracket, a modular connection with peripheral devices is not possible.
*3: Viewed from the front, standard products have an air inlet on the left port and an air outlet on the right port. For "X1", an air inlet is provided on the right port, with an air outlet provided on the left port.
*4: Purge air from standard products is released into the atmosphere. If "E" is indicated, common exhaust of purge air is enabled. The size of exhaust ports include the Rc1/8 for the 300 Series and the Rc1/4 for the 400 Series.
*5: When ordering several options, indicate the required options in alphabetical order.

Specifications for rechargeable battery (Catalog No. CC-1226A)

● Design compatible with rechargeable battery manufacturing process

SU*0*E - ..... - P4*

SD*0*E - ..... - P4*

Components

Components / Model No.	(1) Air filter	(2) Oil mist filter	(3) Super dryer (High polymer membrane air dryer)	(4) Regulator	(5) Differential pressure gauge
SU301E-*-W-C1	—	M3000-10-W-F1	SD301E-*-W	—	—
SU302E-*-W-C1	—	M4000-10-W-F1	SD302E-*-W	—	—
SU401E-*-W-C1	—	M4000-10-W-F1	SD401E-*-W	—	—
SU402E-*-W-C1	—	SM4100-W	SD402E-*-W	—	—
SU301E-*-W-C2	F3000-10-W-F	M3000-10-W-F1	SD301E-*-W	—	GA400-8-P02
SU302E-*-W-C2	F4000-10-W-F	M4000-10-W-F1	SD302E-*-W	—	GA400-8-P02
SU401E-*-W-C2	F4000-10-W-F	M4000-10-W-F1	SD401E-*-W	—	GA400-8-P02
SU402E-*-W-C2	F4000-10-W-F	SM4100-W	SD402E-*-W	—	GA400-8-P02
SU301E-*-W-C3	F3000-10-W-F	M3000-10-W-F1	SD301E-*-W	R3000-10-W	GA400-8-P02
SU302E-*-W-C3	F4000-10-W-F	M4000-10-W-F1	SD302E-*-W	R4000-10-W	GA400-8-P02
SU401E-*-W-C3	F4000-10-W-F	M4000-10-W-F1	SD401E-*-W	R4000-10-W	GA400-8-P02
SU402E-*-W-C3	F4000-10-W-F	SM4100-W	SD402E-*-W	R4000-10-W	GA400-8-P02

*1: Oil mist filter (SM4100-W) is a made-to-order product.

Dimensions

● Unit C1

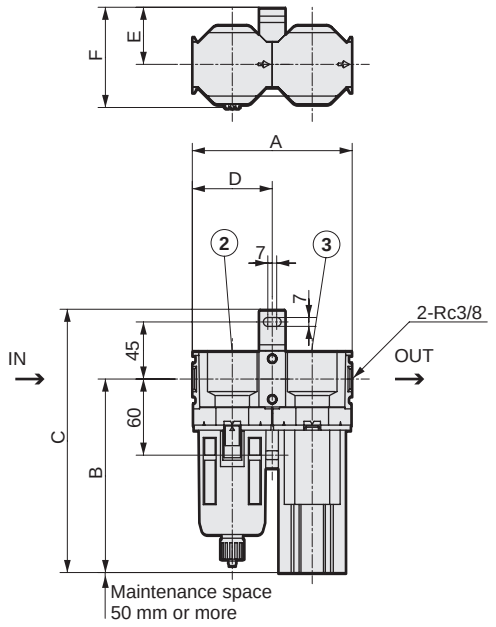

	A	B	C	D	E	F	Wt. (kg)
SU301E-*-W-C1	126	153	208	63	45	79	1.0
SU302E-*-W-C1	143	223	278	80	55	97	1.6
SU401E-*-W-C1	160	223	278	80	55	97	2.1
SU402E-*-W-C1	160	328	383	80	55	95	3.5

● Unit C2

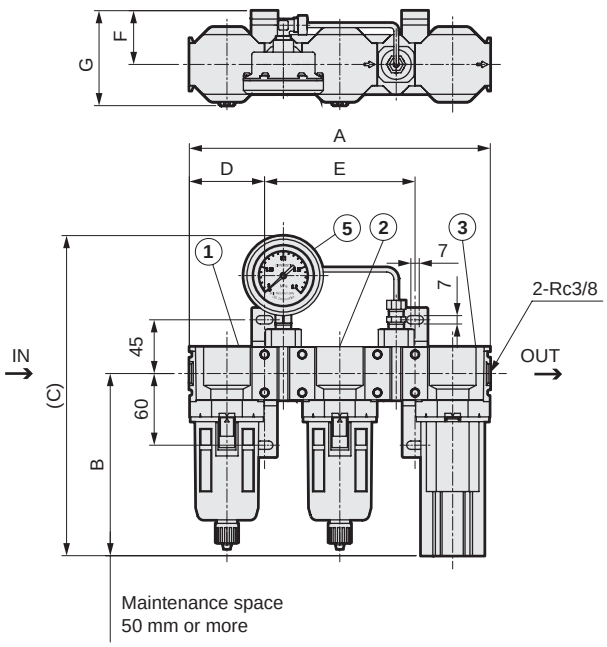

	A	B	C	D	E	F	G	Wt. (kg)
SU301E-*-W-C2	252	153	268	63	126	45	79	2.0
SU302E-*-W-C2	286	223	338	80	143	55	97	2.8
SU401E-*-W-C2	303	223	338	80	143	55	97	3.3
SU402E-*-W-C2	303	328	443	80	143	55	97	4.7

● Unit C3

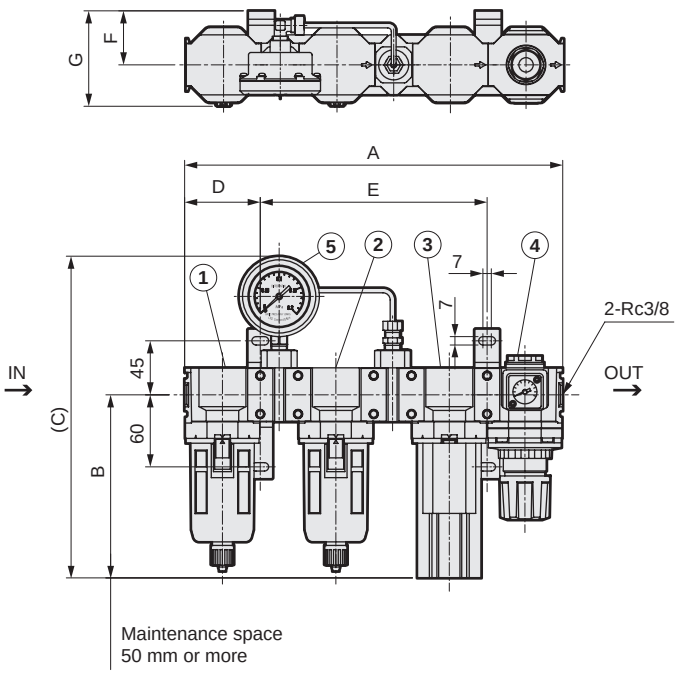

	A	B	C	D	E	F	G	Wt. (kg)
SU301E-*-W-C3	315	153	268	63	189	45	79	2.5
SU302E-*-W-C3	366	223	338	80	206	55	97	3.5
SU401E-*-W-C3	383	223	338	80	223	55	97	4.0
SU402E-*-W-C3	383	328	443	80	223	55	97	5.4

● SD300E/SD400E

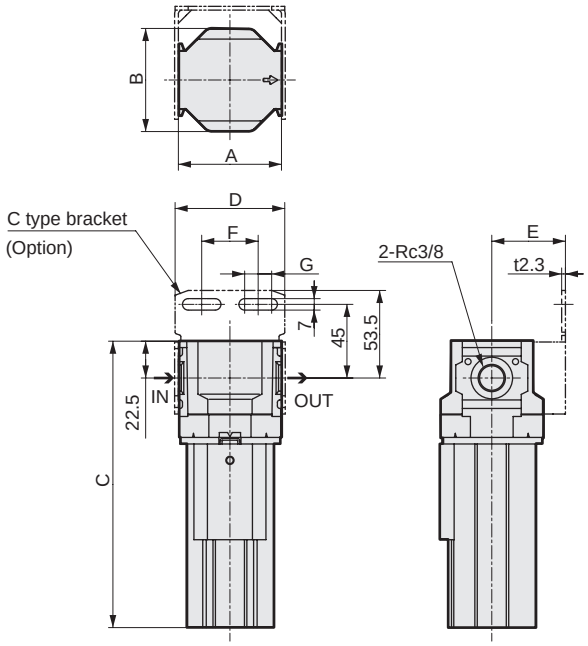

	A	B	C	D	E	F	G	Wt. (kg)
SD301E-*-W	63	63	175	67	45	34.5	16.5	0.6
SD302E-*-W	63	63	245	67	45	34.5	16.5	0.9
SD401E-*-W	80	79	245	84	55	55	14	1.4
SD402E-*-W	80	79	315	84	55	55	14	1.8



Super dryer combination Super dryer (High polymer membrane air dryer)

SU300D/SU400D/SD300D/SD400D-W Series

Slim body and high performance D series

- Small and powerful removal performance. Appropriate for integrating in devices.
- 3 types of units are available. Appropriate system is available according to applications.
- Processing air flow rate: 125 to 750 ℓ /min. (ANR) (0.7 MPa, atmospheric dew point -20°C)

CAD

Specifications

1 MPa ≈ 145.0 psi, 1 MPa = 10 bar

Item		SU301D -*-W-C1	SU302D -*-W-C1	SU401D -*-W-C1	SU402D -*-W-C1	SU301D -*-W-C2	SU302D -*-W-C2	SU401D -*-W-C2	SU402D -*-W-C2	SU301D -*-W-C3	SU302D -*-W-C3	SU401D -*-W-C3	SU402D -*-W-C3	SD301D -*-W	SD302D -*-W	SD401D -*-W	SD402D -*-W
Appearance										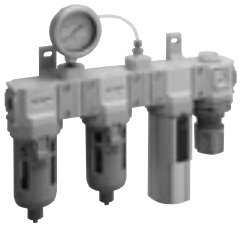							
		Simple & space saving structure unit that removes moisture from the air from which solid impurities have already been removed. (*1)				Unit supplying clean dry air with line not requiring pressure adjustment.				A unit that supplies pressure-adjusted clean dry air just by supplying compressed air.				Discrete super dryer (High polymer membrane air dryer) enabling easy system configuration with peripheral devices due to modular design.			
Configuration		Oil mist filter Super dryer (High polymer membrane air dryer)				Air filter Oil mist filter (with differential pressure gauge) Super dryer (High polymer membrane air dryer)				Air filter Oil mist filter (with differential pressure gauge) Super dryer (High polymer membrane air dryer) Regulator				Super dryer (High polymer membrane air dryer)			
Range of working conditions	Working fluid	Compressed air															
	Inlet air pressure MPa	0.4 (≈58 psi, 4 bar) to 1.0 (≈150 psi, 10 bar)															
	Proof pressure MPa	1.5 (≈220 psi, 15 bar)															
	Inlet air temperature °C	5 (41°F) to 50 (122°F)															
	Ambient temperature °C	5 (41°F) to 50 (122°F)															
Standard rating	Outlet air atmospheric dew point °C	-20 (-4°F)															
	Inlet air flow rate ℓ /min(ANR)	125	250	500	750	125	250	500	750	125	250	500	750	125	250	500	750
	Outlet air flow ℓ /min(ANR)	100	200	400	600	100	200	400	600	100	200	400	600	100	200	400	600
	Purge flow rate ℓ /min(ANR)	25	50	100	150	25	50	100	150	25	50	100	150	25	50	100	150
	Inlet air pressure dew point °C	25 (77°F)															
	Inlet air pressure MPa	0.7 (≈100 psi, 7 bar)															
	Inlet air temperature °C	25 (77°F)															
	Ambient temperature °C	25 (77°F)															
Air filter	Filtration rating μm	—				5								—			
Oil mist filter	Oil removal mg/m³	0.1 (approximately 0.1 ppm) (when the inlet air is 30°C)												—			
Regulator	Set pressure range MPa	—								0.05 to 0.85				—			
	Relief pressure MPa	—								Setting pressure plus 0.05				—			
Standard accessories		Bracket				Differential pressure gauge/bracket				Press gauge/diff press gauge/bracket				—			

*1: An oil mist filter cannot be controlled with a differential pressure gauge for C1. Replace the oil mist filter mantle every year.
*2: Purge flow rate in standard rating section is also the same value at 0.5 MPa.

JIS symbol

SD301D to 402D-*



SU301D to 402D-*-C1

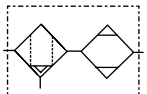

SU301D to 402D-*-C2

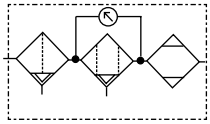

SU302D to 402D-*-C3

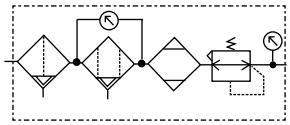

Dew point performance machine

Refer to page 1831 for selection guide and compensation method.

● Dew point performance curve

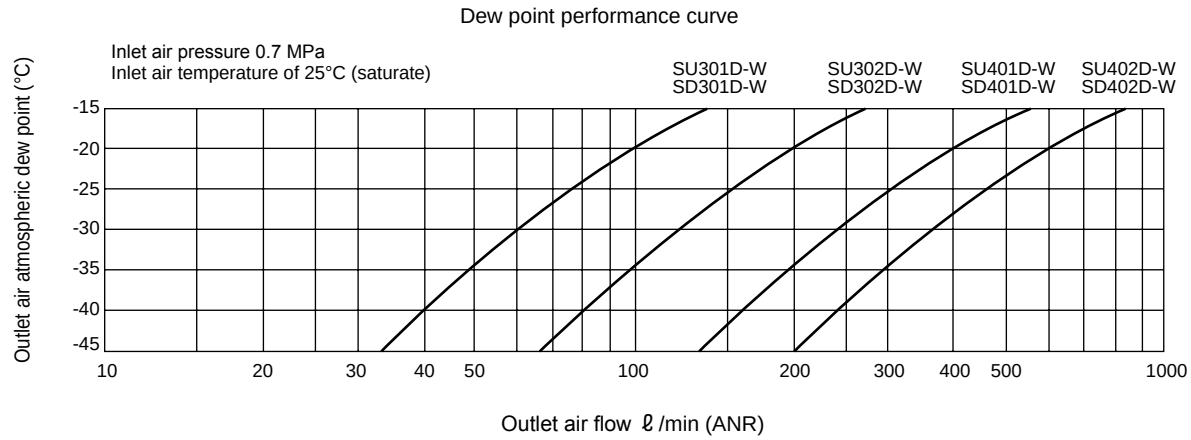

Inlet pressure - outlet air flow rate correction curve

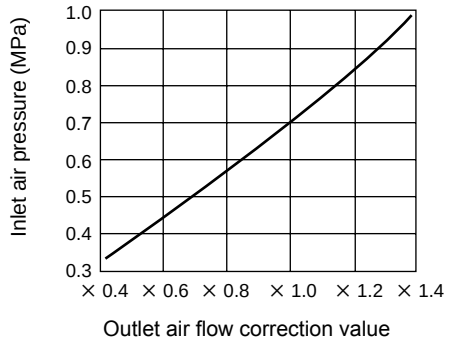

Inlet temperature - outlet air flow rate correction curve

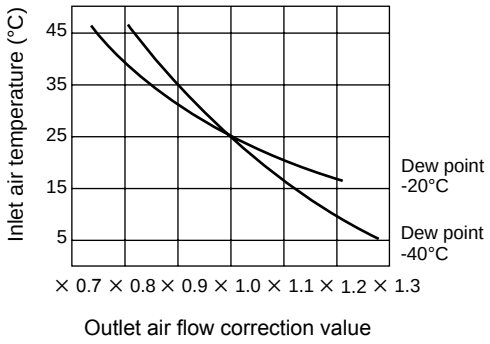

How to order

● Super dryer Combination

SU301D - 05 - W - C1 - X1

- Ⓐ Model No.
- Ⓑ Inlet air pressure
- Ⓒ Unit
- Ⓓ Option *5

Code	Description
Ⓐ Model No.	
SU301D	
SU302D	
SU401D	
SU402D	
Ⓑ Inlet air pressure	
05	0.5 MPa (*1)
07	0.7 MPa (*1)
Ⓒ Unit	
C1	
C2	
C3	
Ⓓ Option	
Blank	None
E	Common exhaust (*4)
X1	Rev. inlet/outlet (*3)

● Super dryer (High polymer membrane air dryer)

SD402D - 05 - W - B

- Ⓐ Model No.
- Ⓑ Inlet air pressure
- Ⓒ Option *5

Code	Description
Ⓐ Model No.	
SD301D	
SD302D	
SD401D	
SD402D	
Ⓑ Inlet air pressure	
05	0.5 MPa (*1)
07	0.7 MPa (*1)
Ⓒ Option	
Blank	None
B	With C type bracket (*2)
E	Common exhaust (*4)
X1	Reversed inlet and outlet (*3)

⚠ Precautions for model No. selection

*1: If inlet air pressure is less than 0.7 MPa, indicate 05, while 0.7 MPa and over, indicate 07.
*2: If fixed by C type bracket, modular connection with peripheral devices is not possible.
*3: Viewed from the front, standard products have an air inlet on the left port and an air outlet on the right port. For "X1", an air inlet is provided on the right port, with an air outlet provided on the left port.
*4: Purge air from standard products is released into the atmosphere. If "E" is indicated, common exhaust of purge air is enabled. The size of exhaust ports include the Rc1/8 for the 300 Series and the Rc1/4 for the 400 Series.
*5: When ordering several options, indicate the required options in alphabetical order.

Specifications for rechargeable battery (Catalog No. CC-1226A)

● Design compatible with rechargeable battery manufacturing process

SU*0*D - ..... - P4*

SD*0*D - ..... - P4*

Components

Components / Model No.	(1) Air filter	(2) Oil mist filter	(3) Super dryer (High polymer membrane air dryer)	(4) Regulator	(5) Differential pressure gauge
SU301D-*-W-C1	—	M4000-10-W-F1	SD301D-*-W	—	—
SU302D-*-W-C1	—	M4000-10-W-F1	SD302D-*-W	—	—
SU401D-*-W-C1	—	SM4100-W	SD401D-*-W	—	—
SU402D-*-W-C1	—	SM4100-W	SD402D-*-W	—	—
SU301D-*-W-C2	F4000-10-W-F	M4000-10-W-F1	SD301D-*-W	—	GA400-8-P02
SU302D-*-W-C2	F4000-10-W-F	M4000-10-W-F1	SD302D-*-W	—	GA400-8-P02
SU401D-*-W-C2	F4000-10-W-F	SM4100-W	SD401D-*-W	—	GA400-8-P02
SU402D-*-W-C2	F4000-10-W-F	SM4100-W	SD402D-*-W	—	GA400-8-P02
SU301D-*-W-C3	F4000-10-W-F	M4000-10-W-F1	SD301D-*-W	R4000-10-W	GA400-8-P02
SU302D-*-W-C3	F4000-10-W-F	M4000-10-W-F1	SD302D-*-W	R4000-10-W	GA400-8-P02
SU401D-*-W-C3	F4000-10-W-F	SM4100-W	SD401D-*-W	R4000-10-W	GA400-8-P02
SU402D-*-W-C3	F4000-10-W-F	SM4100-W	SD402D-*-W	R4000-10-W	GA400-8-P02

*1: Oil mist filter (SM4100-W) is a made-to-order product.

Dimensions

● Unit C1

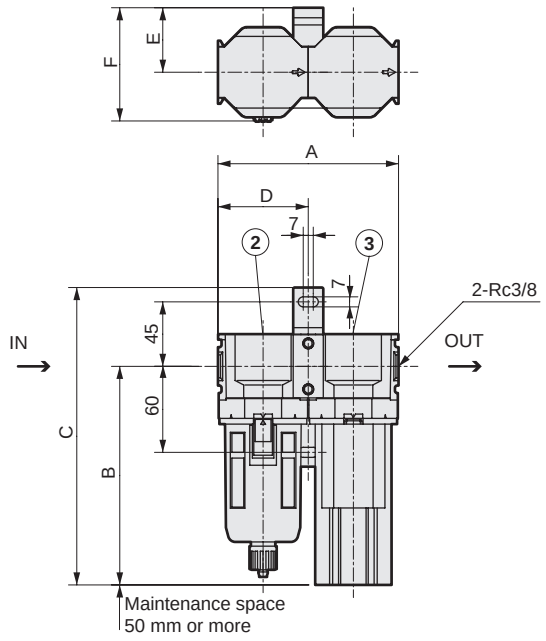

	A	B	C	D	E	F	Wt. (kg)
SU301D-*-W-C1	143	171	226	80	55	97	1.3
SU302D-*-W-C1	143	223	278	80	55	97	1.6
SU401D-*-W-C1	160	328	383	80	55	95	3.1
SU402D-*-W-C1	160	328	383	80	55	95	3.5

● Unit C2

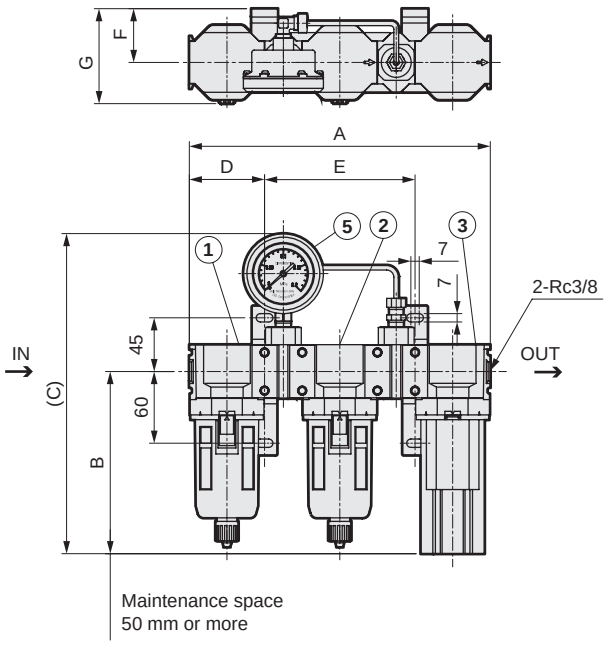

	A	B	C	D	E	F	G	Wt. (kg)
SU301D-*-W-C2	286	171	286	80	143	55	97	2.5
SU302D-*-W-C2	286	223	338	80	143	55	97	2.8
SU401D-*-W-C2	303	328	443	80	143	55	97	4.3
SU402D-*-W-C2	303	328	443	80	143	55	97	4.7

● Unit C3

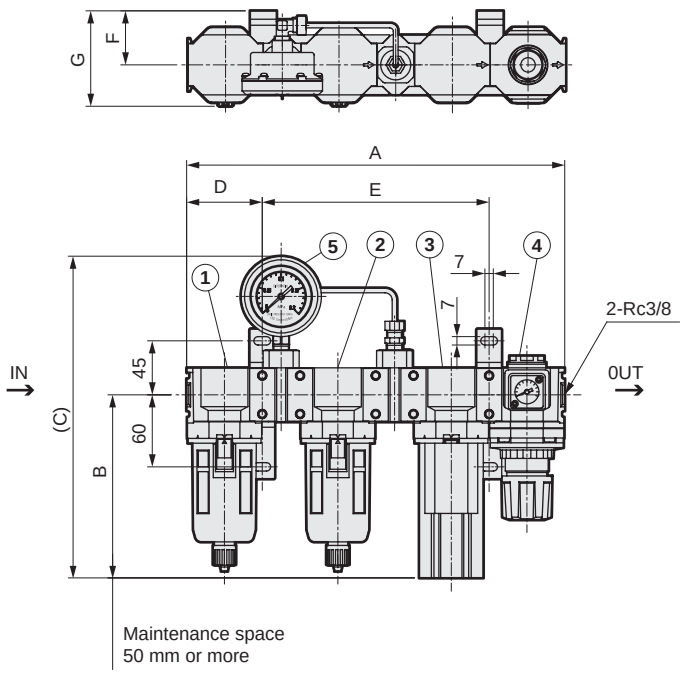

	A	B	C	D	E	F	G	Wt. (kg)
SU301D-*-W-C3	366	171	286	80	206	55	97	3.2
SU302D-*-W-C3	366	223	338	80	206	55	97	3.5
SU401D-*-W-C3	383	328	443	80	223	55	97	5.0
SU402D-*-W-C3	383	328	443	80	223	55	97	5.4

● SD300D/SD400D

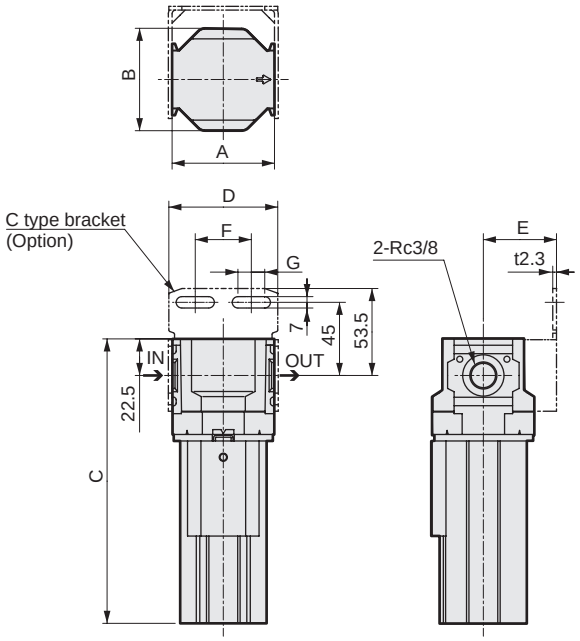

	A	B	C	D	E	F	G	Wt. (kg)
SD301D-*-W	63	63	175	67	45	34.5	16.5	0.6
SD302D-*-W	63	63	245	67	45	34.5	16.5	0.9
SD401D-*-W	80	79	245	84	55	55	14	1.4
SD402D-*-W	80	79	315	84	55	55	14	1.8

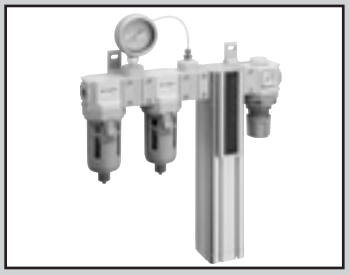

Super dryer combination

SU3000/SU4000-W Series

Easily and stably supplying ultra dry air.

- Ultra dry air with atmospheric dew point -60°C is obtained just by piping to a pneumatic source.
- All in one unit with superior installability.
- Processing air flow rate: 35 to 1500 ℓ/min (ANR) (at 0.7 MPa and -40°C atmospheric dew point)

CAD

Specifications

Item			SU 3015-A-W	SU 3025-A-W	SU 3035-A-W	SU 3050-A-W	SU 3075-A-W	SU 4100-A-W	SU 3015-B-W	SU 3025-B-W	SU 3050-B-W	SU 4050-B-W	SU 4100-B-W
Range of working conditions	Working fluid		Compressed air										
	Inlet air pressure	MPa	0.4 (≈58 psi, 4 bar) to 1.0 (≈150 psi, 10 bar)										
	Proof pressure	MPa	1.5 (≈220 psi, 15 bar)										
	Inlet air temperature	°C	5 (41°F) to 50 (122°F)										
	Ambient temperature	°C	5 (41°F) to 50 (122°F)										
Standard rating	Outlet air atmospheric dew point	°C	-20 (-4°F)						-40 (-40°F)				
	Inlet air flow rate	ℓ/min(ANR)	125	300	490	760	1200	1500	35	90	230	410	890
	Outlet air flow	ℓ/min(ANR)	100	240	390	610	960	1260	25	65	170	300	650
	Purge flow rate	ℓ/min(ANR)	25	60	100	150	240	240	10	25	60	110	240
	Inlet air pressure dew point	°C	25 (77°F)										
	Inlet air pressure	MPa	0.7 (≈100 psi, 7 bar)										
	Inlet air temperature	°C	25 (77°F)										
	Ambient temperature	°C	25 (77°F)										
Air filter	Filtration rating	μm	5										
Oil mist filter	Oil removal	mg/m³	0.1 (approximately 0.1 ppm) (when the inlet air is 30°C)										
Regulator	Set pressure range	MPa	0.05 (≈7.3 psi, 0.5 bar) to 0.85 (≈120 psi, 8.5 bar)										
	Relief pressure	MPa	Setting pressure plus 0.05 (≈7.3 psi, 0.5 bar)										
Standard accessories			Pressure gauge/differential pressure gauge/bracket										

JIS symbol

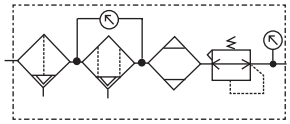

Dew point performance

Refer to page 1831 for selection guide and compensation method.

● Dew point performance curve (-20°C specifications)

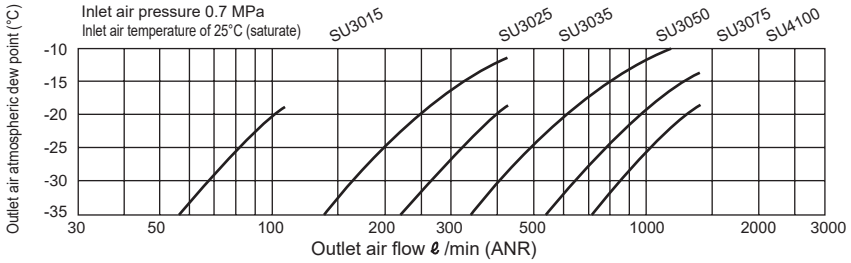

● Inlet pressure - outlet air flow rate correction curve

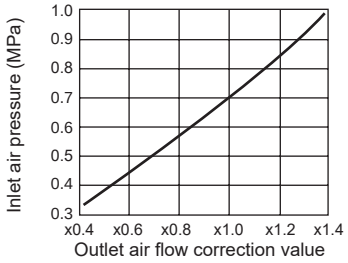

● Dew point performance curve (-40, -60°C specifications)

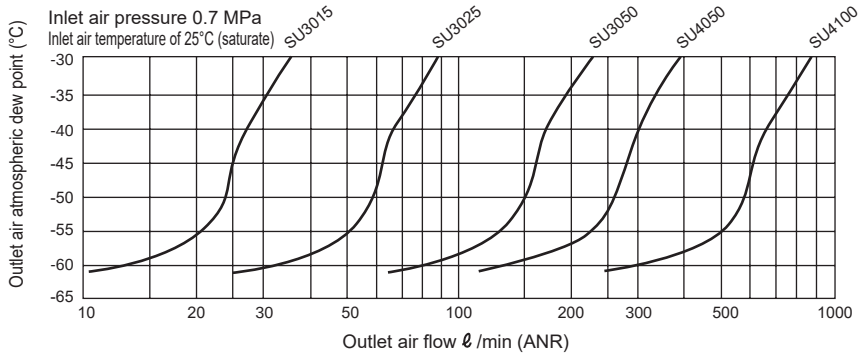

● Inlet temperature - outlet air flow rate correction curve

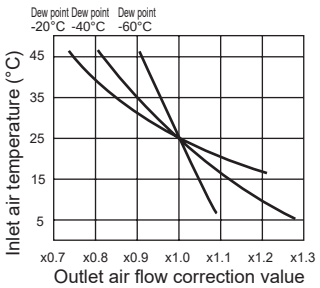

How to order

● Super dryer Combination

SU3015 - A 05 - W - E

Code	Description
Ⓐ Model No.	
SU3015	
SU3025	
SU3035	
SU3050	
SU3075	
SU4050	
SU4100	
Ⓑ Outlet air atmospheric dew point	
A	-20°C
B	-40°C, -60°C (*5)
Ⓒ Inlet air pressure	
05	0.5 MPa (*1)
07	0.7 MPa (*1)
Ⓓ Option	
Blank	None
E	Common exhaust (*3)
X1	Reversed inlet and outlet (*2)

Ⓐ Model No.
Ⓑ Outlet air atmospheric dew point
Ⓒ Inlet air pressure
Ⓓ Option *6

⚠ Precautions for model No. selection

*1: If inlet air pressure is less than 0.7 MPa, indicate 05, while 0.7 MPa and over, indicate 07.
*2: Viewed from the front, standard products have an air inlet on the left port and an air outlet on the right port. For "X1", an air inlet is provided on the right port, with an air outlet provided on the left port.
*3: Purge air from standard products is released into the atmosphere. If "E" is indicated, common exhaust of purge air is enabled. Size of exhaust port is Rc1/2.
*4: Purge flow rate in standard rating section is also the same value at 0.5 MPa.
*5: If outlet atmospheric dew point is -60°C, model No. is "B" as at -40°C.
*6: When ordering several options, indicate the required options in alphabetical order.

Specifications for rechargeable battery (Catalog No. CC-1226A)

● Design compatible with rechargeable battery manufacturing process

SU*000 - ..... - P4*

Components

Components / Model No.	(1) Air filter	(2) Oil mist filter	(3) Super dryer (High polymer membrane air dryer)	(4) Regulator	(5) Differential pressure gauge
SU3015-A-W	F3000-10-W-F	M3000-10-W-F1	SD3015-A	R3000-10-W	GA400-8-P02
SU3025-A-W	F4000-10-W-F	M4000-10-W-F1	SD3025-A	R4000-10-W	GA400-8-P02
SU3035-A-W	F4000-10-W-F	M4000-10-W-F1	SD3035-A	R4000-10-W	GA400-8-P02
SU3050-A-W	F4000-10-W-F	SM4000	SD3050-A	R4000-10-W	GA400-8-P02
SU3075-A-W	F4000-10-W-F	SM4000	SD3075-A	R4000-10-W	GA400-8-P02
SU4100-A-W	F4000-15-W-F	SM4000	SD4100-A	R4000-15-W	GA400-8-P02
SU3015-B-W	F3000-10-W-F	M3000-10-W-F1	SD3015-B	R3000-10-W	GA400-8-P02
SU3025-B-W	F3000-10-W-F	M3000-10-W-F1	SD3025-B	R3000-10-W	GA400-8-P02
SU3050-B-W	F4000-10-W-F	M4000-10-W-F1	SD3050-B	R4000-10-W	GA400-8-P02
SU4050-B-W	F4000-15-W-F	SM4000	SD4050-B	R4000-15-W	GA400-8-P02
SU4100-B-W	F4000-15-W-F	SM4000	SD4100-B	R4000-15-W	GA400-8-P02

*1: Oil mist filter (SM4000) is a made-to-order product.

Dimensions CAD

● SU3015-A/B-W SU3025-A/B-W SU3035-A-W SU3050-B-W

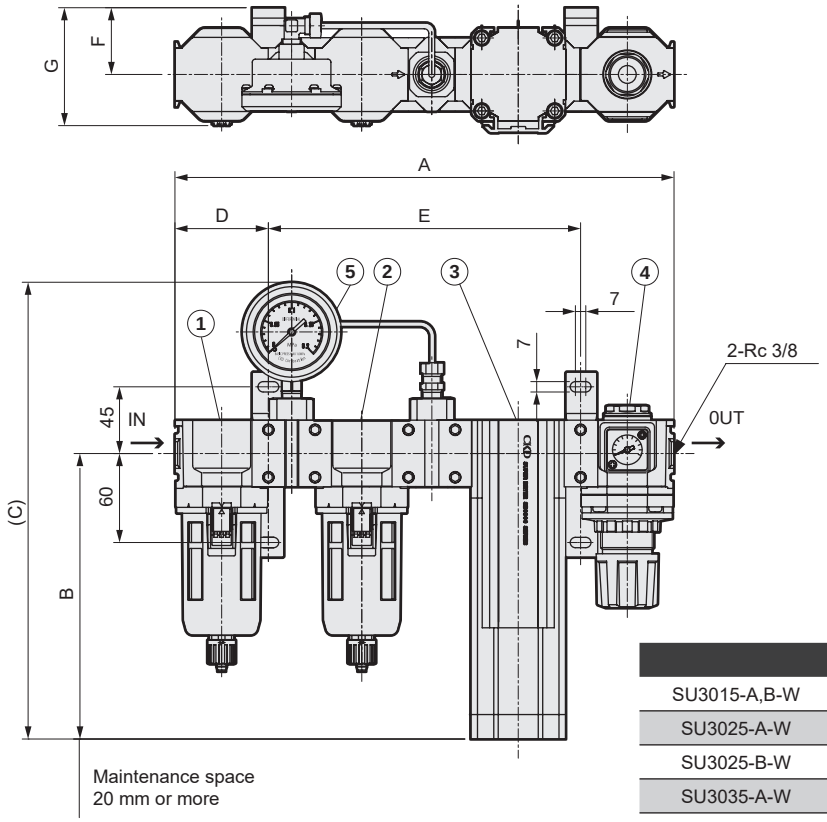

	A	B	C	D	E	F	G	Wt. (kg)
SU3015-A,B-W	337	193	308	63	211	45	85	3.3
SU3025-A-W	388	293	408	80	228	55	97	4.4
SU3025-B-W	337	293	408	63	211	45	85	3.7
SU3035-A-W	388	393	508	80	228	55	97	4.8
SU3050-B-W	388	543	658	80	228	55	97	5.3

● SU3050-A-W SU3075-A-W SU4050-B-W SU4100-A/B-W

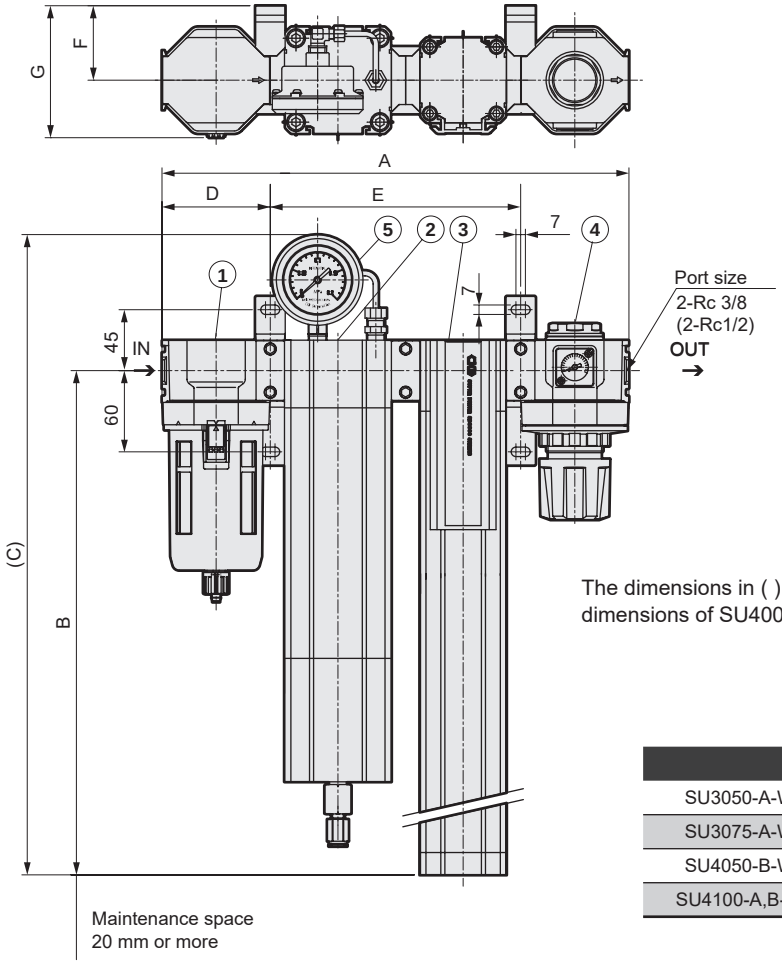

The dimensions in ( ) indicate the dimensions of SU4000.

	A	B	C	D	E	F	G	Wt. (kg)
SU3050-A-W	345	543	644	80	185	55	97	7.7
SU3075-A-W	345	793	894	80	185	55	97	8.6
SU4050-B-W	360	543	644	80	200	55	106	9.0
SU4100-A,B-W	360	1043	1144	80	200	55	106	11.8

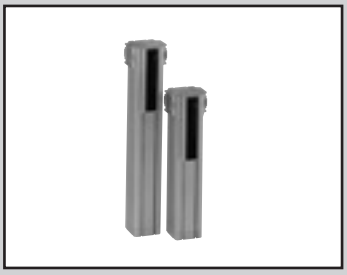

Super dryer (High polymer membrane air dryer)

SD3000/SD4000 Series

Modular design for easy system expansion with peripheral devices

- Quickly supplies ultra dry air of -60°C atmospheric dew point.
- Suitable for a wide range of applications with 1.5 MPa max. working pressure.
- Processing air flow rate: 35 to 890 ℓ/min (ANR) (at 0.7 MPa and -40°C atmospheric dew point)

CAD

Specifications

Item				SD3015	SD3025	SD3035	SD3050	SD3075	SD4050	SD4075	SD4100
Range of working conditions	Working fluid			Compressed air							
	Inlet air pressure		MPa	0.4 (≈58 psi, 4 bar) to 1.5 (≈220 psi, 15 bar)							
	Proof pressure		MPa	2.25 (≈330 psi, 22.5 bar)							
	Inlet air temperature		°C	5 (41°F) to 50 (122°F)							
	Ambient temperature		°C	5 (41°F) to 50 (122°F)							
Standard rating	Inlet air pressure dew point		°C	25 (77°F)							
	Inlet air pressure		MPa	0.7 (≈100 psi, 7 bar)							
	Inlet air temperature		°C	25 (77°F)							
	Ambient temperature		°C	25 (77°F)							
Outlet air atmospheric dew point	-20°C	Inlet air flow rate	ℓ/min(ANR)	125	300	490	760	1200	680	1100	1500
		Outlet air flow	ℓ/min(ANR)	100	240	390	610	960	570	930	1260
		Purge flow rate	ℓ/min(ANR)	25	60	100	150	240	110	170	240
	-40°C	Inlet air flow rate	ℓ/min(ANR)	35	90	150	230	370	410	650	890
		Outlet air flow	ℓ/min(ANR)	25	65	110	170	270	300	480	650
		Purge flow rate	ℓ/min(ANR)	10	25	40	60	100	110	170	240
	-60°C	Inlet air flow rate	ℓ/min(ANR)	20	55	90	140	220	240	380	520
		Outlet air flow	ℓ/min(ANR)	10	30	50	80	120	130	210	280
		Purge flow rate	ℓ/min(ANR)	10	25	40	60	100	110	170	240

JIS symbol



Dew point performance

Refer to page 1831 for selection guide and compensation method.

- Dew point performance curve (-20°C specifications)

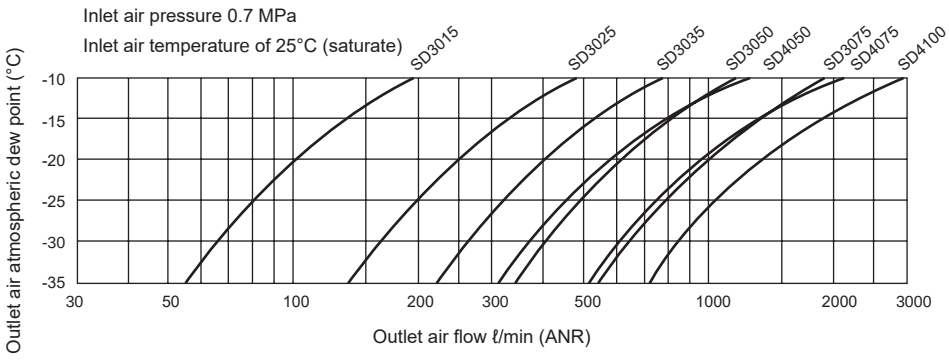

Dew point performance

Refer to page 1831 for selection guide and compensation method.

● Dew point performance curve (-40°C specifications)

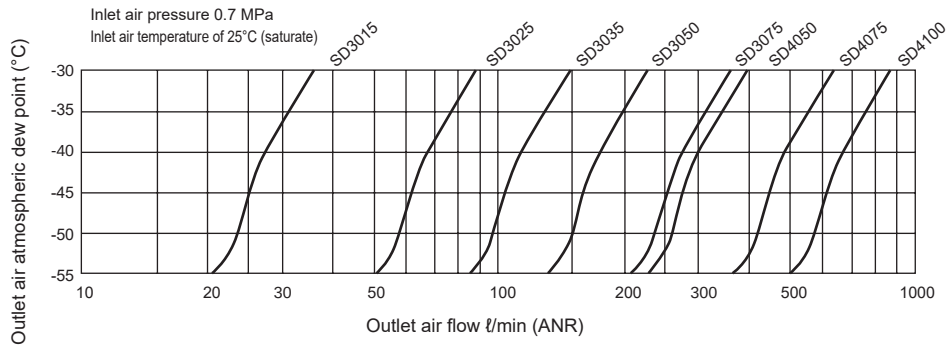

● Inlet pressure - outlet air flow rate correction curve

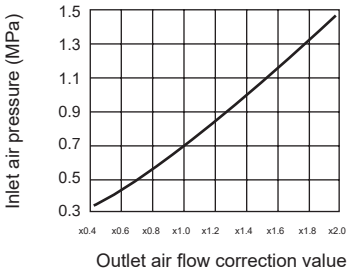

● Dew point performance curve (-60°C specifications)

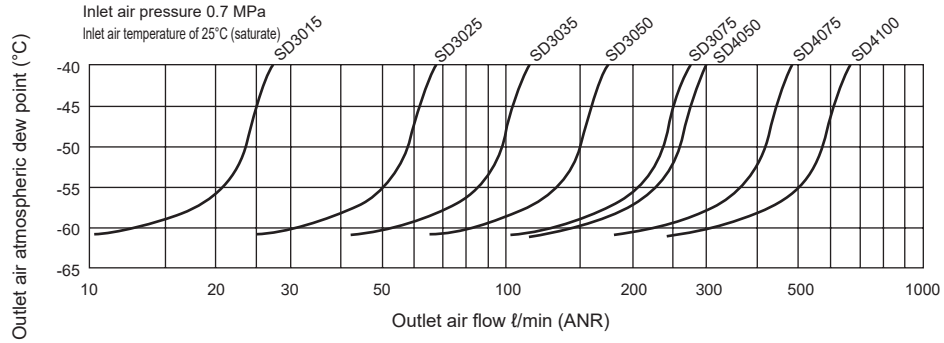

● Inlet temperature - outlet air flow rate correction curve

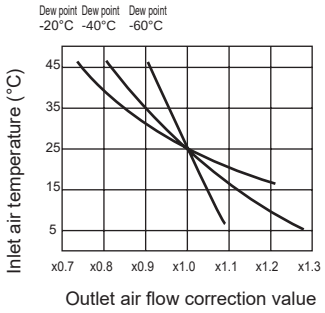

How to order

● Super dryer (High polymer membrane air dryer)

SD3015 - A 05 - B

Ⓐ Model No.

Ⓑ Outlet air atmospheric dew point

Ⓒ Inlet air pressure *1 *2

Ⓓ Option *3 *4 *5

Code	Description
Ⓐ Model No.	
SD3015	
SD3025	
SD3035	
SD3050	
SD3075	
SD4050	
SD4075	
SD4100	
Ⓑ Outlet air atmospheric dew point	
A	-20°C
B	-40°C
C	-60°C
Ⓒ Inlet air pressure	
05	0.5 MPa
07	0.7 MPa
14	1.4 MPa (N/A for outlet air atm dew point "A" (-20°C))
Ⓓ Option	
Blank	None
B	With bracket
E	Common exhaust (*4)
X1	Reversed inlet and outlet (*3)

⚠ Precautions for model No. selection

*1: Select 05 if the inlet air pressure is less than 0.7 MPa, and 07 if it is 0.7 MPa and over and less than 1.4 MPa.

*2: 1.4 MPa inlet air pressure and -20°C outlet air atmospheric dew point cannot be selected at the same time.
As the atmospheric dew point will be -14°C when the inlet air temperature is 25°C and the pressure is 1.4 MPa, there is no point in using the dryer. Select -40°C or -60°C.

*3: Viewed from the front, a standard product has an air inlet on the left port, while an air outlet on the right port. For "X1", air inlet is provided on the right port, while air outlet is provided on the left port.

*4: Purge air from standard products is released into the atmosphere. If "E" is indicated, common exhaust of purge air is enabled.
Size of exhaust port is Rc1/2.

*5: When ordering several options, indicate the required options in alphabetical order.

Specifications for rechargeable battery (Catalog No. CC-1226A)

● Design compatible with rechargeable battery manufacturing process

SD** - ..... - P4***

Dimensions

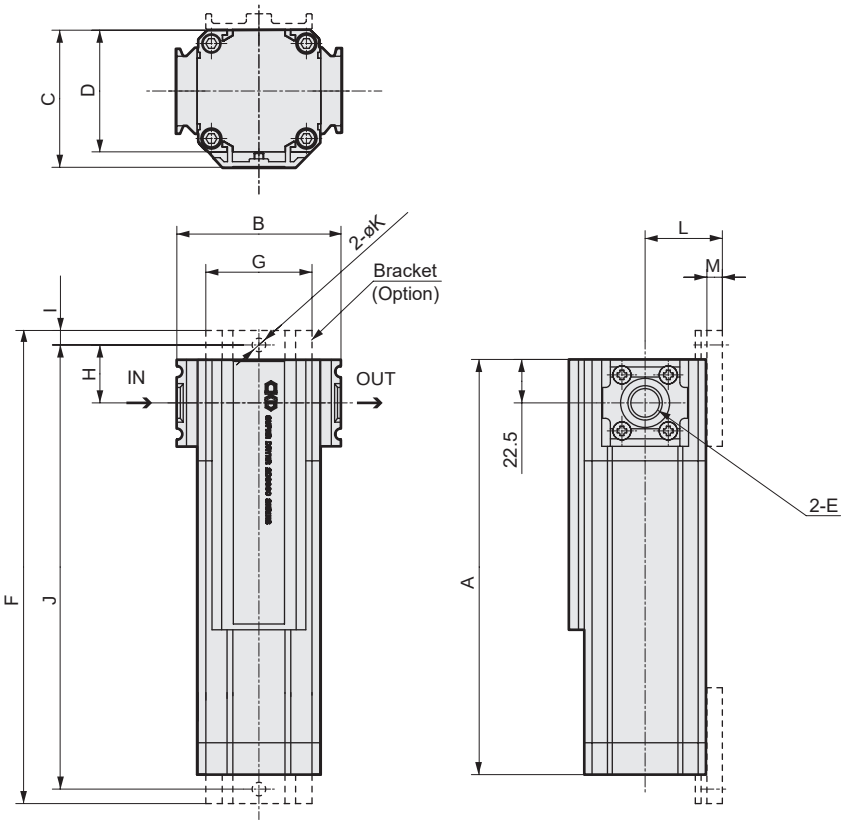

Model No.	A	B	C	D	E	Weight (kg)	Bracket relational dimensions							
							F	G	H	I	J	K	L	M
SD3015	215	85	71	63	Rc 3/8	1.4	245	55	30	7.5	230	7	40	8
SD3025	315	85	71	63	Rc 3/8	1.8	345	55	30	7.5	330	7	40	8
SD3035	415	85	71	63	Rc 3/8	2.2	445	55	30	7.5	430	7	40	8
SD3050	565	85	71	63	Rc 3/8	2.7	595	55	30	7.5	580	7	40	8
SD3075	815	85	71	63	Rc 3/8	3.6	845	55	30	7.5	830	7	40	8
SD4050	565	100	90	79	Rc 1/2	4.0	605	70	32.5	10	585	9	50	10
SD4075	815	100	90	79	Rc 1/2	5.4	855	70	32.5	10	835	9	50	10
SD4100	1065	100	90	79	Rc 1/2	6.8	1105	70	32.5	10	1085	9	50	10



Super dryer modular series

SDM4000 Series

Large flow rate is achieved with polymer separation membrane.

- A single unit can support up to 75 kW compressor.
- Joined headers enable flexible expansion according to the use conditions.
- Suitable for area where explosion must strictly be prevented.
- Processing air flow rate: 1.36 to 12.4 m³/min. (ANR) (0.7 MPa, atmospheric dew point -20°C)

Specifications

Item		SDM 4050-2	SDM 4050-3	SDM 4075-2	SDM 4075-3	SDM 4100-2	SDM 4100-3	SDM 4050-6	SDM 4050-8	SDM 4050-10	SDM 4075-6	SDM 4075-8	SDM 4075-10	SDM 4100-6	SDM 4100-8
Range of working conditions	Working fluid	Compressed air													
	Inlet air pressure MPa	0.4 (≈58 psi, 4 bar) to 1.5 (≈220 psi, 15 bar)													
	Proof pressure MPa	2.25 (≈330 psi, 22.5 bar)													
	Inlet air temperature °C	5 (41°F) to 50 (122°F)													
	Ambient temperature °C	5 (41°F) to 50 (122°F)													
Standard rating	Outlet air atmospheric dew point °C	-20 (-4°F)													
	Inlet air flow rate m³/min(ANR)	1.36	2.04	2.20	3.30	3.00	4.50	4.08	5.44	6.80	6.60	8.80	11.00	9.20	12.40
	Outlet air flow m³/min(ANR)	1.14	1.71	1.86	2.79	2.52	3.78	3.42	4.56	5.70	5.58	7.44	9.30	7.76	10.48
	Purge flow rate m³/min(ANR)	0.22	0.33	0.34	0.51	0.48	0.72	0.66	0.88	1.10	1.02	1.36	1.70	1.44	1.92
	Inlet air pressure dew point °C	25 (77°F)													
	Inlet air pressure MPa	0.7 (≈100 psi, 7 bar)													
	Inlet air temperature °C	25 (77°F)													
	Ambient temperature °C	25 (77°F)													

Note: The product will be floor-mounted for 6 stations or more.

JIS symbol



How to order

● Super dryer (High polymer membrane air dryer)

SDM4050 - 2 - A 05 - B

- Ⓐ Model No.
- Ⓑ Station No.
- Ⓒ Outlet air atmospheric dew point
- Ⓓ Inlet air pressure *1 *2
- Ⓔ Option *3

Code	Description
Ⓐ Model No.	
SDM4050	
SDM4075	
SDM4100	
Ⓑ Station No.	
2	2 stations
3	3 stations
6	6 stations
8	8 stations
10	10 stations (not available for SDM4100)
Ⓒ Outlet air atmospheric dew point	
A	-20°C
B	-40°C
C	-60°C
Ⓓ Inlet air pressure	
05	0.5 MPa
07	0.7 MPa
14	1.4 MPa (N/A for outlet air atm dew point "A" (-20°C))
Ⓔ Option	
Blank	None
B	With bracket

⚠ Precautions for model No. selection

*1: If inlet air pressure is less than 0.7 MPa, indicate 05; for 0.7 MPa and over, indicate 07.

*2: 1.4 MPa inlet air pressure and -20°C outlet air atmospheric dew point cannot be selected at the same time. As the atmospheric dew point will be -14°C when the inlet air temperature is 25°C and the pressure is 1.4 MPa, there is no point in using the dryer. Select -40°C or -60°C.

*3: The product will be floor-mounted without bracket for 6 stations or more.

Dew point performance

Refer to page 1831 for selection guide and compensation method.

● Dew point performance curve (-20°C specifications)

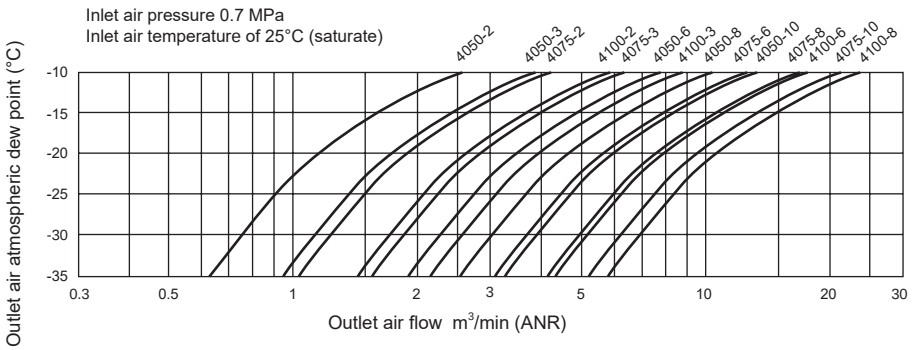

● Dew point performance curve (-40°C specifications)

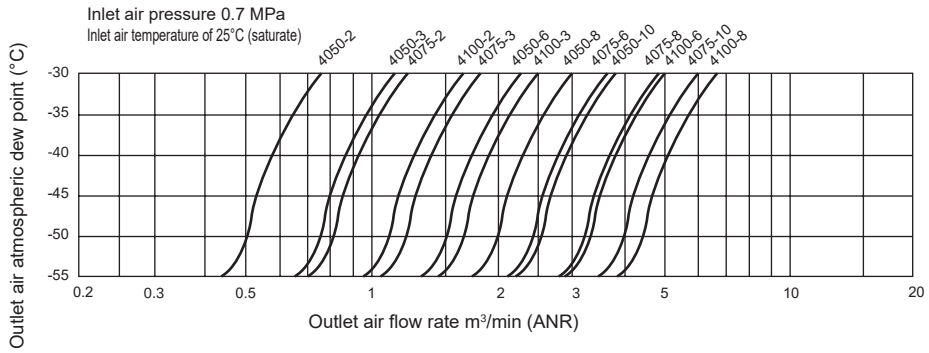

● Inlet pressure - outlet air flow rate correction curve

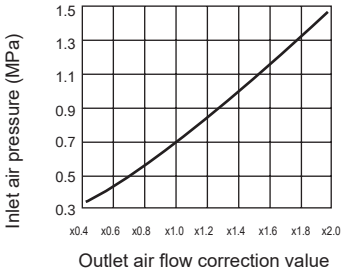

● Dew point performance curve (-60°C specifications)

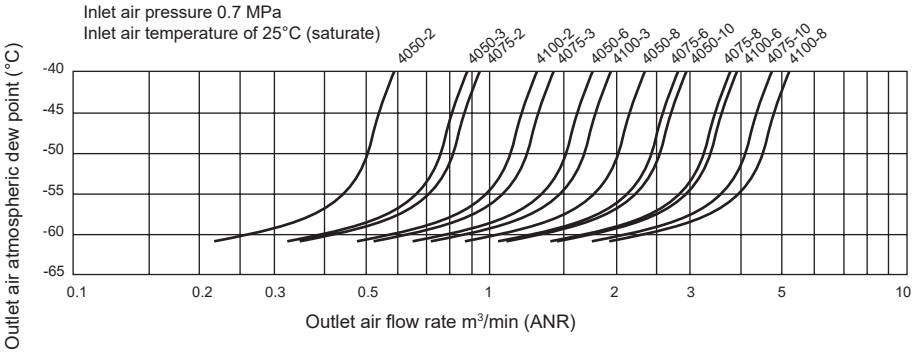

● Inlet temperature - outlet air flow rate correction curve

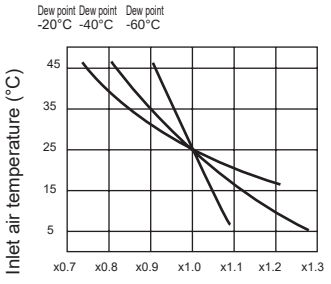

Selection guide by compressor capacity

Inlet air pressure 0.7 MPa
Inlet air temperature of 25°C (saturate)

m³/min(ANR)

Compatible compressor kw / Atm dew point		3.7	5.5	7.5	11	15	22	37	55	75
-20°C	Model No.			SDM4050-2-A07	SDM4075-2-A07	SDM4075-3-A07	SDM4050-6-A07	SDM4075-6-A07	SDM4100-6-A07	SDM4100-8-A07
	Inlet air flow rate			1.36	2.20	3.30	4.08	6.60	9.20	12.40
	Outlet air flow			1.14	1.86	2.79	3.42	5.58	7.76	10.48
-40°C	Model No.		SDM4050-2-B07	SDM4075-2-B07	SDM4075-3-B07	SDM4100-3-B07	SDM4075-6-B07	SDM4075-10-B07		
	Inlet air flow rate		0.82	1.30	1.95	2.67	3.90	6.50		
	Outlet air flow		0.60	0.96	1.44	1.95	2.88	4.80		
-60°C	Model No.	SDM4050-2-C07	SDM4075-2-C07	SDM4075-3-C07	SDM4100-3-C07	SDM4075-8-C07	SDM4075-10-C07			
	Inlet air flow rate	0.50	0.76	1.14	1.65	3.04	3.80			
	Outlet air flow	0.28	0.42	0.63	0.93	1.68	2.10			

With different flow rate and conditions, select the model based on the dew point performance curve above according to the required outlet air flow rate.

Dimensions

● 2/3 stations

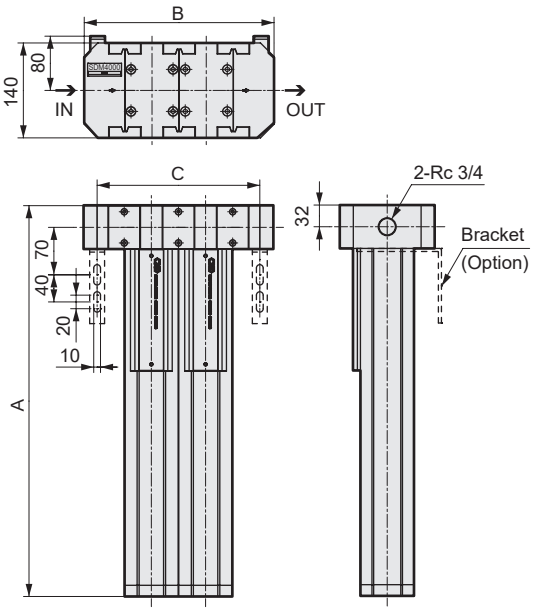

Model No.	A	B	C	Weight (kg)
SDM4050-2	577	280	240	12
SDM4050-3	577	360	320	17
SDM4075-2	827	280	240	15
SDM4075-3	827	360	320	21
SDM4100-2	1077	280	240	18
SDM4100-3	1077	360	320	25

● 6/8/10 stations

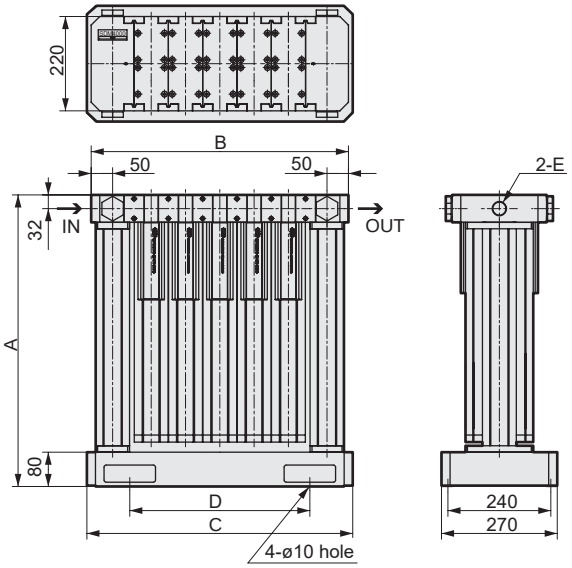

Model No.	A	B	C	D	E	Weight (kg)
SDM4050-6	680	440	460	260	Rc1	41
SDM4050-8	680	520	540	340	Rc1	50
SDM4050-10	680	600	620	420	Rc1	59
SDM4075-6	930	440	460	260	Rc1 1/2	52
SDM4075-8	930	520	540	340	Rc1 1/2	64
SDM4075-10	930	600	620	420	Rc1 1/2	76
SDM4100-6	1180	440	460	260	Rc1 1/2	63
SDM4100-8	1180	520	540	340	Rc1 1/2	78

Selection guide

(Selection guide)
Each performance curve shows the relation of the outlet air flow and the outlet air atmospheric dew point of each model at an inlet pressure of 0.7 MPa and inlet air temperature of 25°C (saturate). Select the model according to the intersection of the required dew point and required flow rate shown on the right.

(Flow rate compensation method)
If the inlet pressure and inlet temperature differ from the rated values, the outlet air flow rate that can be supplied will change. Use each compensation curve and compensate in this case.

(Rated outlet air flow rate) x (correction value) = (conditional outlet air flow rate)

In addition, when the inlet air is the air which comes through the refrigeration air dryer, regardless of actual temperature, select the model with inlet air temperature of 10°C.

(Example) Required dew point of -15°C
When the required flow rate is 100 ℓ/min (ANR), the model (1) located on the right side of an intersection point can be selected.

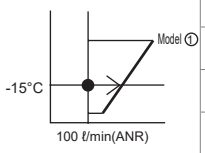

(Example) Inlet pressure of 0.85 MPa
Required dew point of -20°C
When the required flow rate is 120 ℓ/min (ANR)

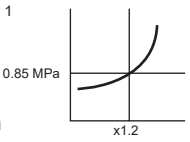

1. Obtain compensation (in this case 1.2) from the pressure flow rate compensation curve.
2. Model (2) has an outlet atmospheric dew point of -20°C and outlet air flow rate of 100 ℓ/min, allowing up to a 1.2-fold rate of 120 ℓ/min (ANR); therefore model (2) is selectable.

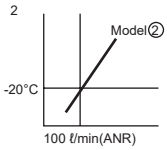

Purge flow rate

The purge flow rate is shown in the specifications.
Make sure that the flow rate including the purge flow rate as well as the outlet side operating air flow rate can be supplied from the inlet.The purge flow rate when the inlet air pressure differs from the rated,The rated purge flow rate is multiplied by the compensation value shown on the right.

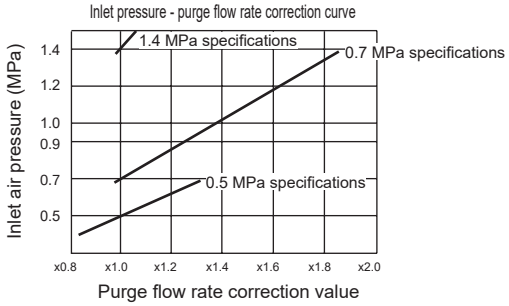

Pressure dew point - atmospheric dew point conversion table

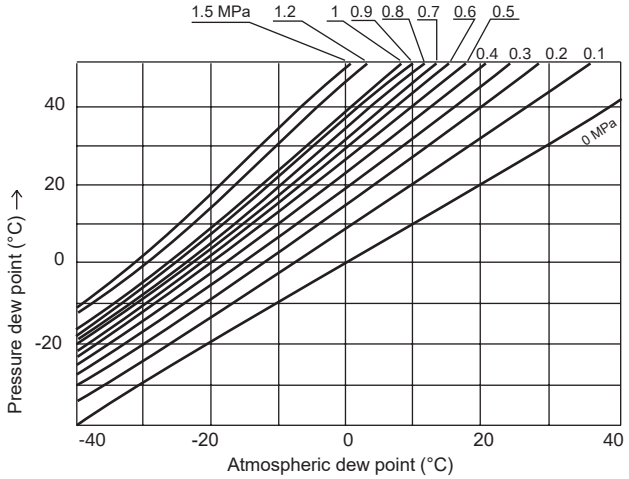

Reading pressure dew point - atmospheric dew point conversion table

This table,The pressure dew point at each pressure is converted to the atmospheric dew point,or to convert the atmospheric dew point to a pressure dew point. Example:Obtain the atmospheric dew point when the pressure is 0.7MPa and the pressure dew point is 5°C.

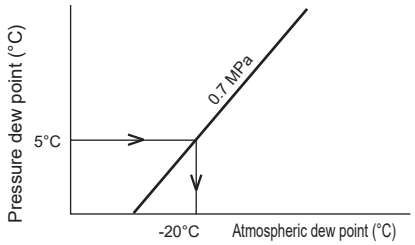

According to the above table, when the pressure is 0.7 MPa, the 5°C pressure dew point is converted into a -20°C atmospheric dew point.

Measuring the working air flow rate

When selecting the super dryer model,If the working air flow rate is unknown, measure the flow rate.Pneumatic flow rate sensor with integrated display, peak display, peak value hold, and analog output is used for flow rate measurement"FLUEREX Flow Sensor Tester Kit" is convenient.

● FLUEREX Flow Sensor Tester Kit
FLUEREX PFK SERIES



Pneumatic components (high polymer membrane air dryer)

Safety Precautions

Be sure to read this section before use.

Refer to Intro Page 63 for general precautions regarding pneumatic components and detailed precautions for individual series

Refer to "⚠ Safety precautions".

Product-specific cautions: Super dryer SD/SU Series

Design/selection

⚠CAUTION

■ Working environment

- Avoid using in conditions under which the inlet air temperature is higher than the ambient temperature. (Water drops may form and accumulate inside if the super dryer body cools)
- Avoid installing this product where it will be subject to direct sunlight or rain.
- As the bowl material is polycarbonate, avoid use with the following chemicals or in an atmosphere containing these chemicals. [SU Series]
- Avoid use in environments where ozone is generated.
- Avoid using this product where vibration and impact are present.

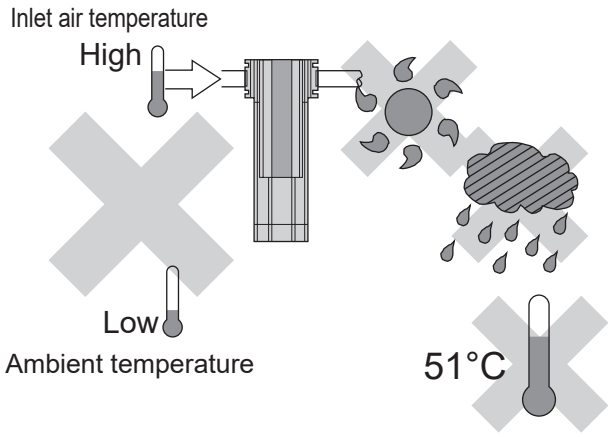

Types of chemicals	Categories of chemicals	Main products of chemicals	General applications	Polycarbonate
Inorganic compound	Acids	Hydrochloric acid, sulfuric acid, fluorine, phosphoric acid, chromic acid, etc.	Acid washing of metals, acidic degreasing solution, coating treatment solution	x
	Alkalines	Caustic soda, caustic potash, calcium hydroxide, aqueous ammonia, sodium carbonate, etc.	Alkaline degreasing solution for metals	x
	Inorganic salts	Sodium sulfide, potassium nitrate, potassium bichromate, sodium sulfate, etc.		x
Organic compound	Aromatic hydrocarbons	Benzene, toluene, xylene, ethyl benzene, styrene, etc.	Contained in paint thinner (benzene, toluene, and xylene)	x
	Chlorinated aliphatic hydrocarbons	Methyl chloride, ethylene chloride, methylene chloride, acetylene chloride, chloroform, trichlene, perchlene, carbon tetrachloride	Organic solvent-based washing solution for metals (trichlene, perchlene, carbon tetrachloride, etc.)	x
	Chlorinated aromatic hydrocarbons	Chlorobenzene, dichlorobenzene, benzene hexachloride (B/H/C), etc.	Agricultural chemicals	x
	Petroleum components	Solvent, naphtha, gasoline		x
	Alcohols	Methyl alcohol, ethyl alcohol, cyclohexanol, benzyl alcohol	Used as antifreezing agent	x
	Phenol	Carbolic acid, cresol, naphthol, etc.	Disinfectant solution	x
	Ethers	Methyl ether, methyl ethyl ether, ethyl ether	Additive of brake oil	x
	Ketones	Acetone, methyl ethyl ketone, cyclohexanone, acetophenone, etc.		x
	Carboxylic acids	Formic acid, acetic acid, butyl acid, acrylic acid, oxalic acid, phthalic acid, etc.	Dyes; oxalic acid for aluminum processing; phthalic acid for paint base	x
	Phosphate ester	Dimethyl phthalate (DMP), diethyl phthalate (DEP), dibutyl phthalate (DBP), dioctyl phthalate (DOP)	Lubricant, synthetic coolant, rust preventing agent additive plasticizer for synthetic resin	x
	Oxyacids	Glycol acid, lactic acid, malic acid, citric acid, tartaric acid		x
	Nitro compounds	Nitromethane, nitroethane, nitroethylene, nitrobenzene, etc.		x
	Amines	Methylamine, dimethylamine, ethylamine, aniline, acetanilide, etc.	Additive of brake oil	x
	Nitriles	Acetonitrile, acrylonitrile, benzonitrile, acetoisonitrile, etc.	Raw material for nitrile rubber	x

Mounting, installation and adjustment

⚠ CAUTION

- Do not step onto this body.

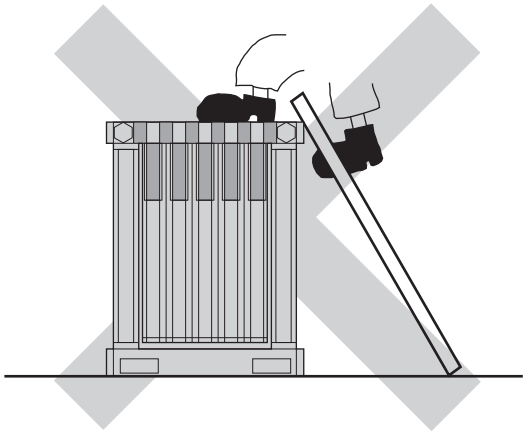

- When piping, remove coolant, rust preventing agents, contaminants, etc.

- Mount so that the drain outlet faces straight downward. Use a bore size ø5.7 to 6 tube for drain discharge piping, and keep the length within 5 m. Avoid vertical piping. [SU Series]

- Install an oil removing filter (M type) near the super dryer inlet to remove all water drops and oil. If oil adheres on the membrane module, dew point performance could degrade.

- Install the regulator on the outlet side of the super dryer.

- When installing SDM (2/3 stations), fix the inlet and outlet pipes or fix the body with a bracket.

- When installing SDM (6 stations or more), place it on a solid and flat surface that does not vibrate and fix the base with anchor bolts.

Use/maintenance

⚠ CAUTION

- Do not use reverse airflow.
  Do not pressurize suddenly. The differential pressure gauge or mantle may be damaged.
  [SU Series]

- The oil mist filter life is spent when the pressure drops to 0.07 MPa or after one year of use, whichever is sooner. Replace the mantle with a new one at the end of its life. (Check the pressure drop with the differential pressure gauge.)
  (Do not touch the urethane rubber foam layer when replacing the mantle)
  [SU Series]

- The service life of the super dryer's membrane module differs according to the working conditions. As a guideline, replace the membrane every 3 to 5 years.

- Confirm that pressure has been released before mounting or removing the bowl and bowl guard. [SU Series]

- Be aware that adequate time is necessary to obtain a required dew point after compressed air is supplied.

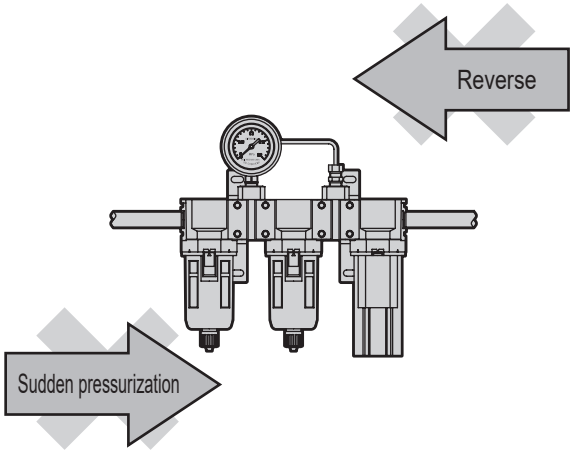

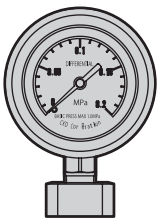

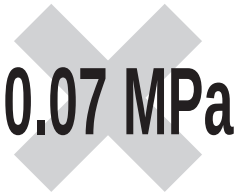

Main line filter

■ **Refining and pressure adjusting components/main line units**

CONTENTS

Series variation 1836
Guide to particle sizes 1838
Replacing the element 1840

Medium main line filter

Medium main line filter device recommended system configuration 1842
AF2 Series (general purpose) 1845
AF4000 Series (oil-free) 1855

Large main line filter

AF3000 Series (regular) 1867
AF5000 Series (oil-free) 1881

Series variation

Medium/large filter

		Medium (general purpose)			Medium (oil-free)			
Series		AF2-□P	AF2-□M	AF2-□X	AF4000P	AF4000S	AF4000M	AF4000X
Specifications					Stainless steel vessel			
Applicable air compressor kW (reference)	Processing flow rate m³/min	• Dust 1 μm	• Dust 0.01 μm • Oil content 0.01 mg/m³	• Oil content 0.003 mg/m³ • Deodorization	• Dust 5 μm	• Dust 1 μm	• Dust 0.01 μm • Oil content 0.01 mg/m³	• Oil content 0.003 mg/m³ • Deodorization
0.75	0.15							
1.5	0.22							
2.2	0.35							
3.7	0.5							
5.5	0.825							
7.5	1.0							
11	1.5							
15	3.7/4.95	● (4.95)	● (4.95)	● (4.95)				
22	3.7/4.95	● (4.95)	● (4.95)	● (4.95)	● (3.7)	● (3.7)	● (3.7)	● (3.7)
37	6.2/7.93	● (7.93)	● (7.93)	● (7.93)	● (6.2)	● (6.2)	● (6.2)	● (6.2)
55	10/11.3	● (11.3)	● (11.3)	● (11.3)	● (10)	● (10)	● (10)	● (10)
75	12.8/13	● (12.8)	● (12.8)	● (12.8)	● (13)	● (13)	● (13)	● (13)
95	16/18.8/19.8	● (19.8)	● (19.8)	● (19.8)		● (18.8)	● (18.8)	● (18.8)
120	24.1	●	●	●				
150	32							
200								
250	48							
300	64							
400	80							
480	96							
-	128							
710	160							
960	192							
1450	256							
Differential pressure gauge		● Standard equipment	● Standard equipment	-	● Option	● Option	● Option	● Option
Differential pressure alarm output		-	-	-	-	-	-	-
Auto-drain		Float	Float	-	Float	Float	Float	-
Low pressure loss element		● Standard equipment	● Standard equipment	● Standard equipment	● Standard equipment	● Standard equipment	● Standard equipment	● Standard equipment
Shut-off valve		● Standard equipment	● Standard equipment	● Standard equipment	● Included in auto-drain	● Included in auto-drain	● Included in auto-drain	-
Specified color paint		×	×	×	-	-	-	-
Companion flange attached		×	×	×	-	-	-	-
Foundation bolt/nut attached		×	×	×	-	-	-	-
Foundation bolt/nut attached (SUS)		×	×	×	-	-	-	-
Outdoor		×	×	×	-	-	-	-
IN/OUT reverse direction		-	-	-	-	-	-	-
Product photo		×	×	×	-	-	-	-
Appearance								
Page		1848			1858			

Note) This list is a selection guideline.
Refer to the page for selection, and select a model after checking installation and operating conditions.

		Large (regular)				Large (oil-free)			
Series		AF3000P	AF3000S	AF3000M	AF3000X	AF5000P	AF5000S	AF5000M	AF5000X
Specifications						Stainless steel vessel			
Applicable air compressor kW (reference)	Processing flow rate m³/min	• Dust 3 μm	• Dust 0.3 μm • Oil content 0. 5 mg/m³	• Dust 0.01 μm • Oil content 0.01 mg/m³	• Oil content 0.03 mg/m³ • Deodorization	• Dust 3 μm	• Dust 0.3 μm • Oil content 0. 5 mg/m³	• Dust 0.01 μm • Oil content 0.01 mg/m³	• Oil content 0.003 mg/m³ • Deodorization
0.75	0.15								
1.5	0.22								
2.2	0.35								
3.7	0.5								
5.5	0.825								
7.5	1.0								
11	1.5								
15	3.7/4.95								
22	3.7/4.95								
37	6.2/7.93								
55	10/11.3								
75	12.8/13								
95	16/17/18.8	● (16)	● (16)	● (16)	● (16)	● (16)	● (16)	● (16)	● (16)
120	24.1								
150	32	●	●	●	●	●	●	●	●
200									
250	48	●	●	●	●	●	●	●	●
300	64	●	●	●	●	●	●	●	●
400	80	●	●	●	●	●	●	●	●
480	96	●	●	●	●	●	●	●	●
-	128	●	●	●	●	●	●	●	●
710	160	●	●	●	●	●	●	●	●
960	192	●	●	●	●	●	●	●	●
1450	256	●	●	●	●	●	●	●	●
Differential pressure gauge		● Standard equipment	● Standard equipment	● Standard equipment	-	● Standard equipment	● Standard equipment	● Standard equipment	-
Differential pressure alarm output		▲ Custom made	▲ Custom made	▲ Custom made	-	● Standard equipment	● Standard equipment	● Standard equipment	-
Auto-drain		Float	Float	Float	-	Electronic (with alarm output)	Electronic (with alarm output)	Float	-
Low pressure loss element		● Standard equipment	● Standard equipment	● Standard equipment	● Standard equipment	● Standard equipment	● Standard equipment	● Standard equipment	● Standard equipment
Shut-off valve		● Included in auto-drain	● Included in auto-drain	● Included in auto-drain	×	● Included in auto-drain	● Included in auto-drain	● Included in auto-drain	● Standard equipment
Specified color paint		● Option	● Option	● Option	● Option	-	-	-	-
Companion flange attached		● Option	● Option	● Option	● Option	● Option	● Option	● Option	● Option
Foundation bolt/nut attached		● Option	● Option	● Option	● Option	● Option	● Option	● Option	● Option
Foundation bolt/nut attached (SUS)		● Option	● Option	● Option	● Option	● Option	● Option	● Option	● Option
Outdoor		● Option	● Option	● Option	● Option	▲ Custom made	▲ Custom made	▲ Custom made	▲ Custom made
IN/OUT reverse direction		● Option	● Option	● Option	● Option	● Option	● Option	● Option	● Option
Product photo		● Option	● Option	● Option	● Option	● Option	● Option	● Option	● Option
Appearance									
Page		1870	1872	1874	1876	1884	1888	1892	1896

Guide to particle sizes

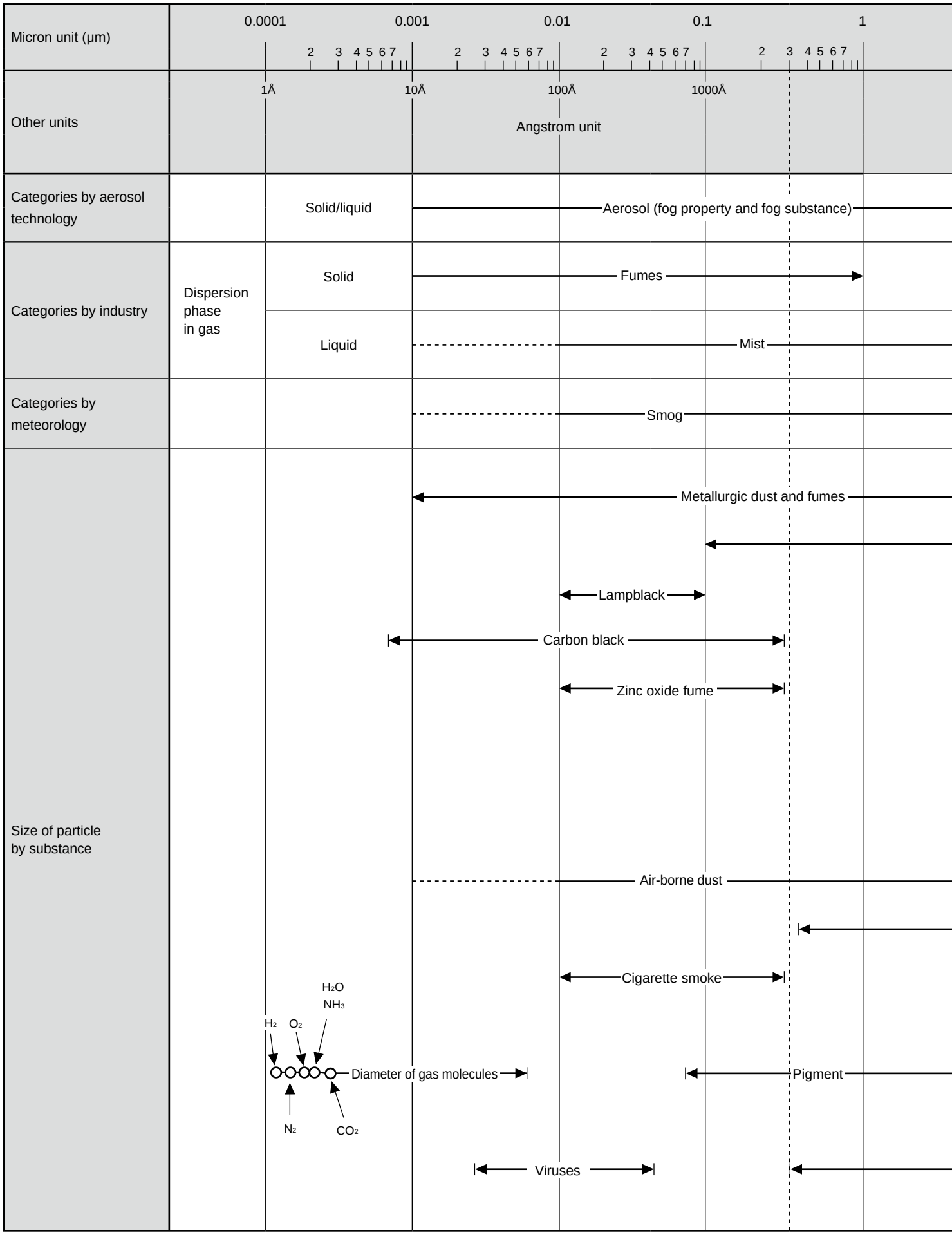

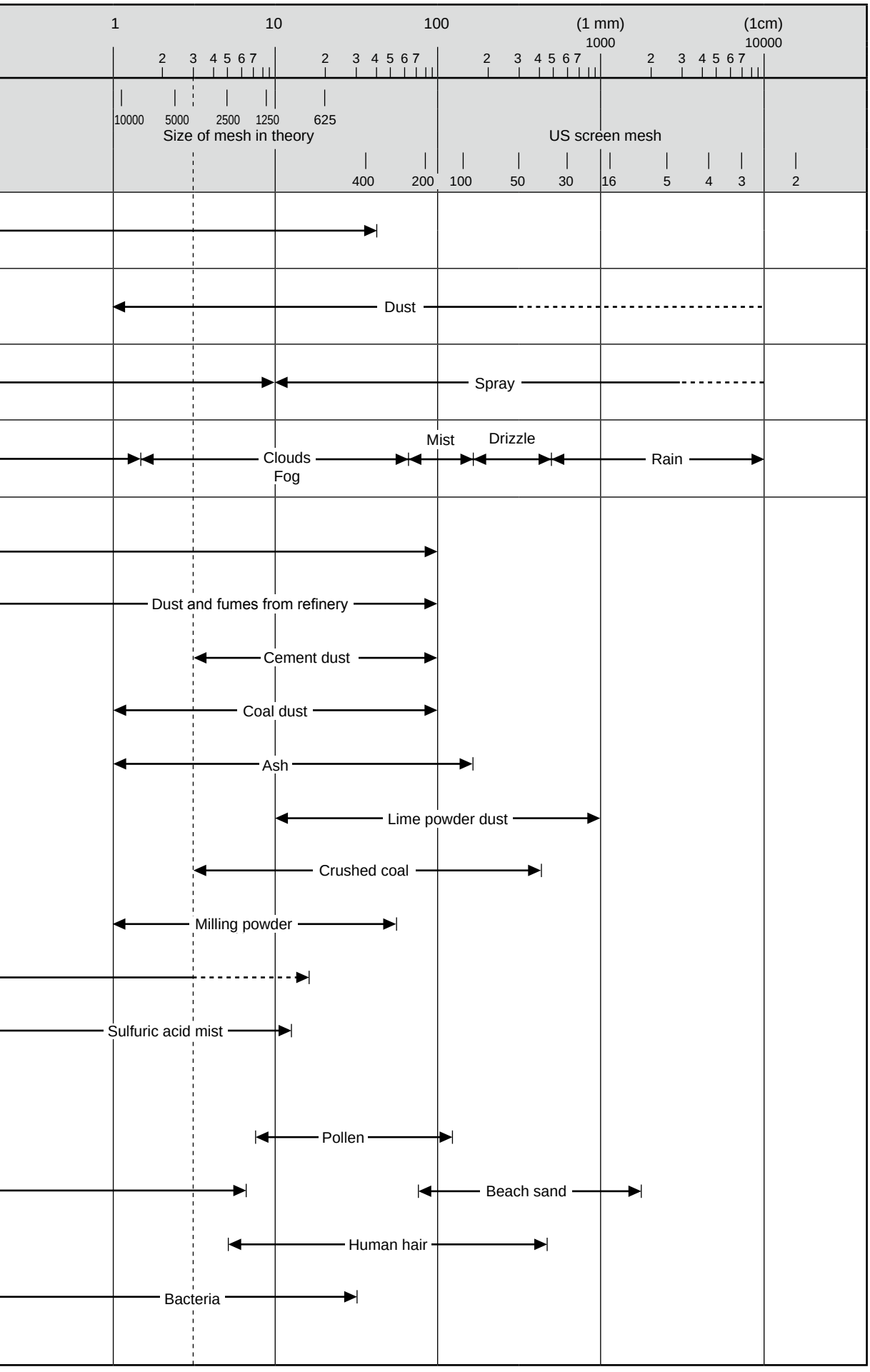
1
10
100
(1 mm)
1000
(1cm)
10000
2 3 4 5 6 7
10000
5000
2500
1250
625
Size of mesh in theory
US screen mesh
400
200
100
50
30
16
5
4
3
2
Dust
Spray
Mist
Drizzle
Clouds
Fog
Rain
Dust and fumes from refinery
Cement dust
Coal dust
Ash
Lime powder dust
Crushed coal
Milling powder
Sulfuric acid mist
Pollen
Beach sand
Human hair
Bacteria

Replacing the element

1 ⚠ Spent element must be disposed properly as industrial waste.
The filter cannot be regenerated and reused.
If the filter contains toxic or harmful substances, dispose of substances based on local laws.

2 Replace the element based on the following replacement standards.

P type: Replace when the differential pressure indicator in the filter body reaches the red zone or after one year of use, whichever comes first.
If use is continued while the indicator is in the red zone, the filter element could be damaged by the pressure difference, or pressure required for device operation may not be attained.

S type, M type:
Replace when the differential pressure indicator in the filter body reaches the red zone or after one year of use, whichever comes first.
If use is continued while the indicator is beyond the red zone, the filter element could be damaged by the pressure difference, or pressure required for device operation may not be attained.
When using the filter to remove oil, if the indicator is in the red zone and it is still being used, the oil captured by the element may flow out into the air again, and be carried to the secondary side. This will inhibit oil removal.

X type: Replace the element after the period specified for each model, or when the deodorizing effect is lost.
The X type filter adsorbs odorous molecules with adsorbent, so the service life cannot be detected by the element's pressure difference. Judge the status by odor or manage the service life based on usage time.

⚠ Valve operation at start and end of daily operations

If the large ball valve, etc., is opened when starting and ending operations, pay attention to the following and open the valve slowly.

- If the large bore size valve is opened suddenly, an excessive flow rate several-fold larger than set device specifications may flow and damage the internal structure.
- If the large bore size valve is opened suddenly to discharge any residual pressure from the air line at the end of daily operations, excessive amounts of flow may result as above and reverse flow could occur, damaging devices.
- Note that the differential pressure gauge can be easily damaged by the increase of pressure loss due to an excessive flow rate (proportional to the square of the flow rate), and reverse pressure caused by reverse flow.

Information on recommended alternative models for air filters (flange)

As of August 2006

Production and sales of the “Old products” listed below have been discontinued.

Select alternative models from “Current products”.

Note: The comparison table given below shall be used only as a guideline. When making an actual selection, the current working air pressure, inlet air temperature, ambient temperature, and required dew point, etc., must be taken into consideration to ensure sufficient performance.

Comparison table for new and old air filter model No.

Class equivalent to 3 µm

Old product		Current product	
Flow rate (m^3/min)	Model No.	Flow rate (m^3/min)	Model No.
12	1113-16C-MD		
		16	AF3016P-50
20	1114-40C-MD		
		32	AF3032P-80
40	1123-48C-MD		
		48	AF3048P-100
60	1128-64C-MD		
		64	AF3064P-100
		80	AF3080P-150
		96	AF3096P-150
		128	AF3128P-150
		160	AF3160P-200
		192	AF3192P-200
		256	AF3256P-200

Class equivalent to 0.3 µm

Old product		Current product	
Flow rate (m^3/min)	Model No.	Flow rate (m^3/min)	Model No.
7.2	1113-16C-MDY		
9.5	1151J-16C-MD		
		16	AF3016S-50
19	1152-24C-MD		
28.5	1152J-32C-MD		
		32	AF3032S-80
38	1153-32C-MD		
		48	AF3048S-100
57	1154-32C-MD		
		64	AF3064S-100
76	1155-48C-MD		
		80	AF3080S-150
95	1155J-48C-MD	96	AF3096S-150
114	1156-48C-MD		
		128	AF3128S-150
152	1157-48C-MD		
		160	AF3160S-200
190	1158-64C-MD	192	AF3192S-200
		256	AF3256S-200

Class equivalent to 0.01 µm

Old product		Current product	
Flow rate (m^3/min)	Model No.	Flow rate (m^3/min)	Model No.
11.9	1251J-16C-MD		
		16	AF3016M-50
23.8	1252-24C-MD		
		32	AF3032M-80
35.7	1252J-32C-MD		
47.6	1253-32C-MD	48	AF3048M-100
		64	AF3064M-100
71.4	1254-32C-MD		
		80	AF3080M-150
95.2	1255-48C-MD	96	AF3096M-150
119	1255J-48C-MD		
		128	AF3128M-150
142.8	1256-48C-MD		
		160	AF3160M-200
190.4	1257-48C-MD	192	AF3192M-200
238	1258-64C-MD		
		256	AF3256M-200

Class equivalent to deodorization

Old product		Current product	
Flow rate (m^3/min)	Model No.	Flow rate (m^3/min)	Model No.
11.9	1251J-16C-MX		
		16	AF3016X-50
23.8	1252-24C-MX		
		32	AF3032X-80
35.7	1252J-32C-MX		
47.6	1253-32C-MX	48	AF3048X-100
		64	AF3064X-100
71.4	1254-32C-MX		
		80	AF3080X-150
95.2	1255-48C-MX	96	AF3096X-150
119	1255J-48C-MX		
		128	AF3128X-150
142.8	1256-48C-MX		
		160	AF3160X-200
190.4	1257-48C-MX	192	AF3192X-200
238	1258-64C-MX		
		256	AF3256X-200

indicates the general purpose. Processing flow rates are guidelines. (Based on the temporary pressure of 0.7 MPa and pressure loss of 0.01 MPa; however, rates may slightly differ depending on the model No.)

Medium main line filter device recommended system configuration

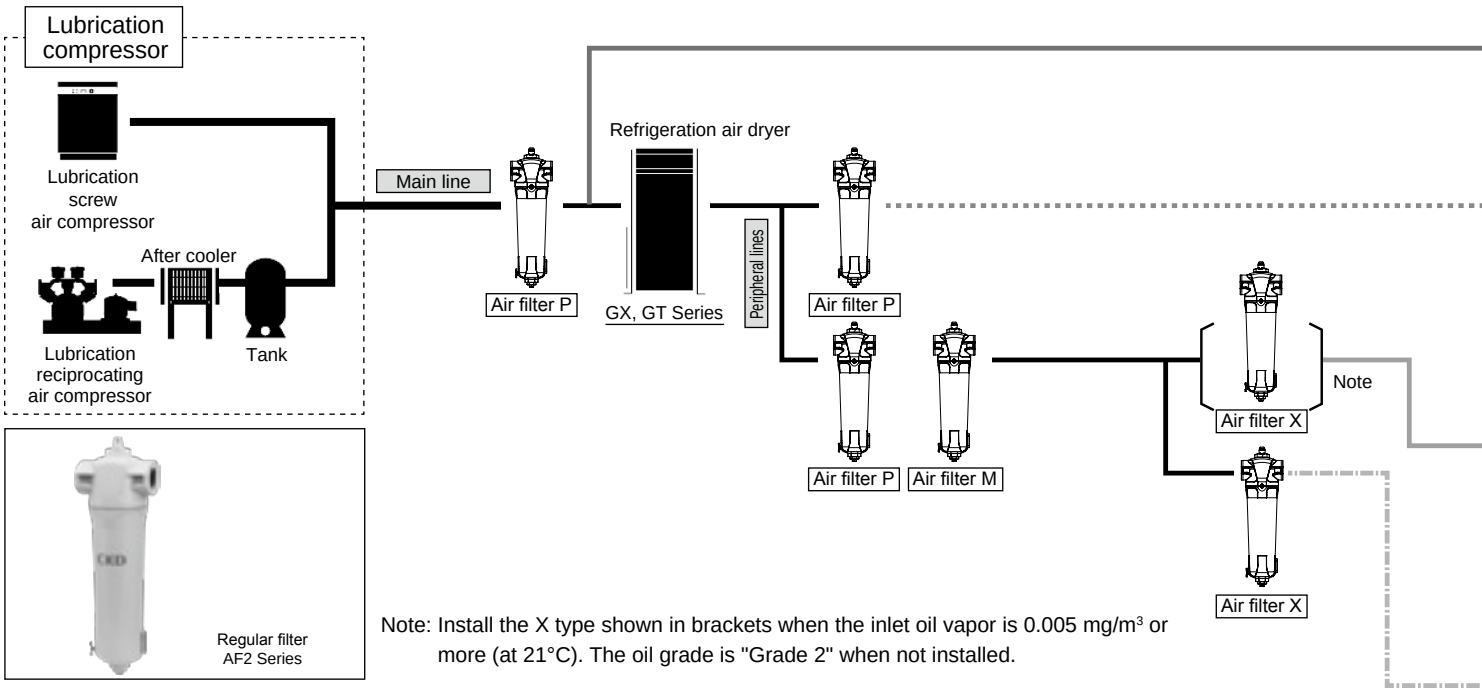

Note: Install the X type shown in brackets when the inlet oil vapor is 0.005 mg/m³ or more (at 21°C). The oil grade is "Grade 2" when not installed.

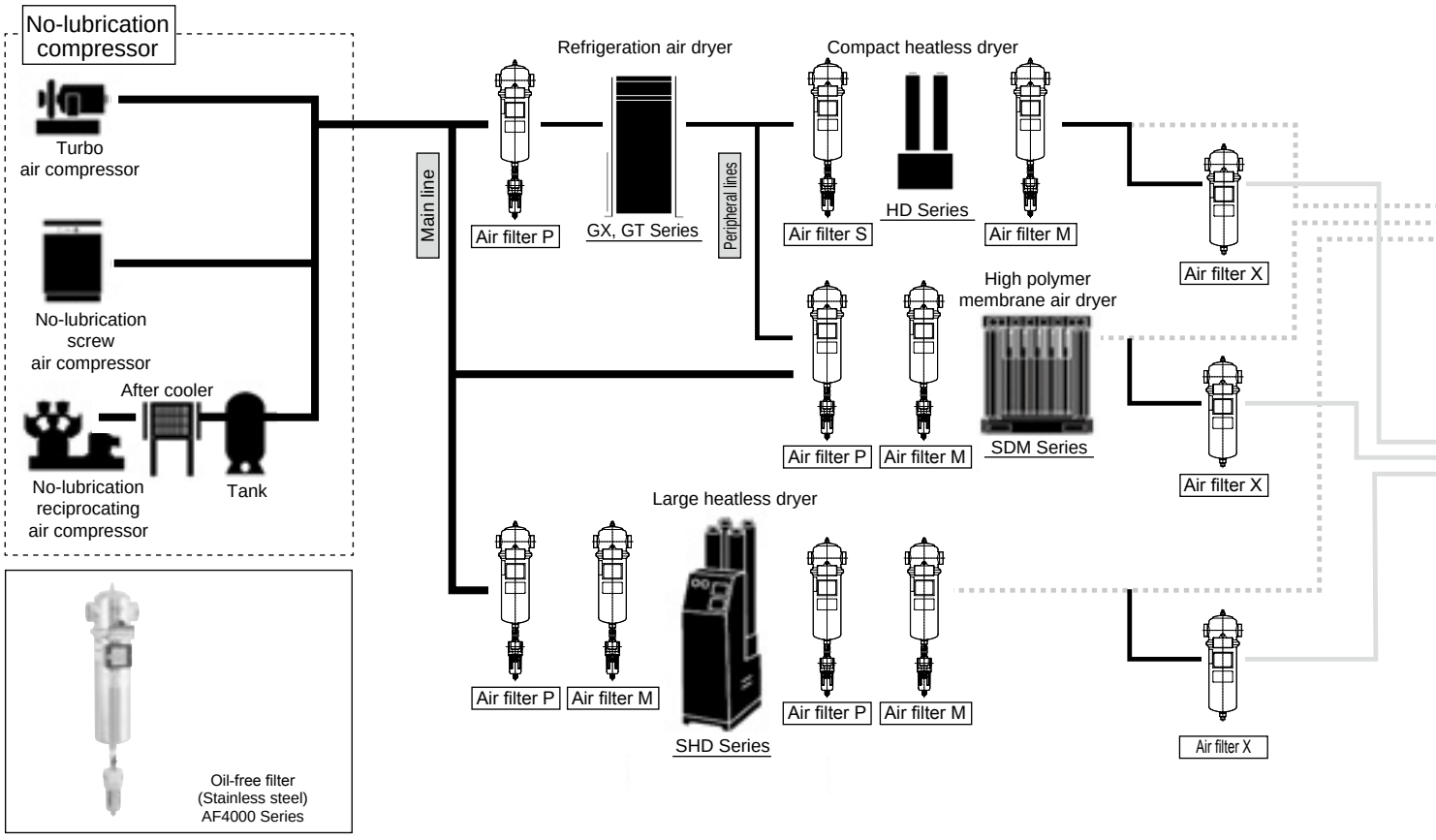

JIS B 8392-1:2012 Compressed air purity grade

Grade	Solid particles				Humidity and moisture		Oil
	Max. number of particles per 1 m³ for particle diameter d (μm)			Mass concentration Cp	Pressure dew point	Water concentration Cw	Total oil concentration
	0.1 < d ≤ 0.5	0.5 < d ≤ 1.0	1.0 < d ≤ 5.0	mg/m³	°C	g/m³	mg/m³
0	Conditions stricter than Grade 1 to be specified by user or supplier.						
1	≤ 20,000	≤ 400	≤ 10	-	≤ -70	-	≤ 0.01
2	≤ 400,000	≤ 6,000	≤ 100	-	≤ -40	-	≤ 0.1
3	-	≤ 90,000	≤ 1,000	-	≤ -20	-	≤ 1
4	-	-	≤ 10,000	-	≤ +3	-	≤ 5
5	-	-	≤ 100,000	-	≤ +7	-	-
6	-	-	-	0 < Cp ≤ 5	≤ +10	-	-
7	-	-	-	5 < Cp ≤ 10	-	Cw ≤ 0.5	-
8	-	-	-	-	-	0.5 < Cw ≤ 5	-
9	-	-	-	-	-	5 < Cw ≤ 10	-
X	-	-	-	Cp > 10	-	Cw > 10	> 5

JIS B 8392-1:2003 has been revised to JIS B 8392-1:2012.

For example,
What is Grade 1:2:1?

- Solid particles 0.1 to 0.5 μm are 20,000 particles or less, 0.5 to 1.0 μm are 400 particles or less, and 1.0 to 5.0 μm are 10 particles or less
- Pressure dew point -40°C or less
- Oil concentration 0.01 mg/m³ or less.

Air quality	Applications	Impurities in air			Grade
		Solid particle	Moisture	Oil content	
Water drip removal air/ coarse dust removal air	For construction/civil engineering machinery Air for cleaning (dry air not required)	1 µm	-	-	2.-.-
General dry air	General pneumatic components General pneumatic tools Labor saving components Pneumatic jigs and tools Air chuck Air vice Air for cleaning precision parts	1 µm	Pressure dew point 10°C	0.6 mg/m³	2.6.3
			Pressure dew point 7°C		2.5.3
Dry air (oil-free)	Instrumentation Measurement Sequence control High-grade coating	0.01 µm	Pressure dew point 10°C	0.01 mg/m³ [0.003 mg/m³]	1.6.1
			Pressure dew point 7°C		1.5.1
Dry air (odorless)	Food processing industry (where air is not directly blown onto food) Pharmaceutical industry Agitation/transportation/dry/package/air for brewing	0.01 µm	Pressure dew point 10°C	0.003 mg/m³	1.6.1
			Pressure dew point 7°C		1.5.1
Ultra dry air (oil-free)	Ozone generator Powder transfer Drying furnace gas Drying the insulation gas of a high-voltage generator Drying computer rooms Centralized control instrumentation	0.01 µm	Pressure dew point -20°C	0.01 mg/m³	1.3.1
			Pressure dew point -40°C		1.2.1
			Pressure dew point -60°C		1.2.1
Ultra dry air (odorless)	Food processing industry (where air is not directly blown onto food) Pharmaceutical industry Agitation/transportation/dry/package/air for brewing	0.01 µm	Pressure dew point -20°C	0.003 mg/m³	1.3.1
			Pressure dew point -40°C		1.2.1
			Pressure dew point -60°C		1.2.1

⚠ Precautions for system selection

*1: If your conditions are different, refer to the specifications in the catalog in order to select a model.
*2: This example of system selection is based on an air-cooling refrigeration air dryer.
When making a selection based on an air-cooling refrigeration air dryer, the since standard processing air flow rate may differ, the model No. of the filter may vary.
Contact CKD for details.
*3: Air filter and oil mist filter are to be used where the inlet air temperature is 60°C or less, and X type where the inlet air temperature is 30°C or less.
If air temperature from the secondary side of the refrigeration air dryer is high, keep enough distance from the refrigeration air dryer to maintain a temperature no greater than the inlet air temperature.
*4: This system cannot be used for high pressure specifications (1 to 1.6 MPa). Consult with CKD for details.
*5: Use anti-rust processed materials for piping (zinc plated pipe, lining pipe or stainless steel pipe).
*6: If a processing air rates larger than the refrigeration air dryer supplies may though they be used instantaneously, install a tank to the secondary side of the refrigeration air dryer. Installing a tank supplies stable moisture removed air.
*7: The air filter at the secondary side of the refrigeration air dryer can be used as a pre-filter before an oil mist filter.
*8: Depending on working conditions, condensation may form on the inside of the refrigeration air dryer and drip to the floor. To prevent water drops from flowing out, install a drain-pan, etc., before installing the dryer.
*9: Consult with CKD for energy-saving systems.
*10:Install a filter immediately before the equipment to be used to remove contaminants existing in the piping.

Medium main line filter
AF2

■ **Refining and pressure adjusting components/main line unit/main line filter**

Overview

Unique design works toward reducing pressure loss.
Medium main line filter helps reduce operation costs.

Features

(1) Pop-up indicator
A 360° high-visibility indicator, enabling differential pressure checking from all directions, is equipped as standard. (P/M types)
Changes to red for notifications.

(2) Module connections that help further save space
The filters can be connected with the modular kit, enabling space-saving installation. The linked structure is simplified for easy connection.

(3) Easy element replacement
The push-fit element makes mounting easy.

(4) Reliable drain discharger
The auto-drain, highly reliable with long service life, is provided as standard for the drain discharger.

(5) With residual pressure exhaust valve
A residual pressure air release valve is equipped as standard. It can also be used for manual drain discharge.



CONTENTS

Product introduction	1846
● Medium size oil removing filter (AF2-□P)	1848
● Medium size high performance oil removing filter (AF2-□M)	1848
● Medium deodorizing filter (AF2-□X)	1848
Configurations table	1851
Medium main line filter component recommended system configuration	1842
⚠ Safety precautions	1852

Energy saving filter

Unique design works toward reducing pressure loss.
Medium main line filter AF2 Series helps reduce operation costs.



Pop-up indicator

A 360° high-visibility indicator, enabling differential pressure checking from all directions, is equipped as standard. (P/M types) Changes to red for notifications.



Normal　　Replacement needed

Module connections that help further save space

The filters can be connected with the modular kit, enabling space-saving installation. The linked structure is simplified for easy connection.

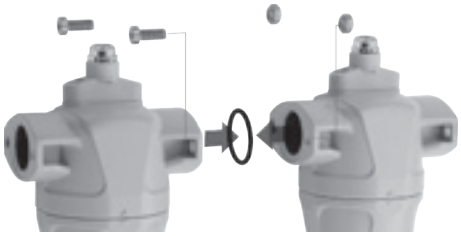

Easy element replacement

The push-fit element makes mounting easy.



Highly reliable automatic drain equipped as standard

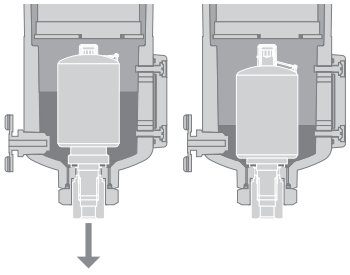

At drainage

With residual pressure exhaust valve

A residual pressure air release valve is equipped as standard.
It can also be used for manual drain discharge.



Liquid level gauge

The drain level can be visually confirmed.



Internal filter structure

Double seal structure

Realizes high sealing performance.

Colored end cap

Elements are easily identifiable due to the different colors assigned to each type.

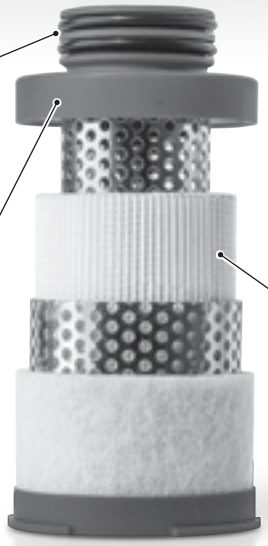



Pleated structure

With a large filtration area, the capacity for catching impurities is increased.
Pressure loss reduction and compactness are realized with this element.

Conventional product



Conventional element where water and oil are adhering to the material, causing pressure loss

AF2 Series



For image purposes.

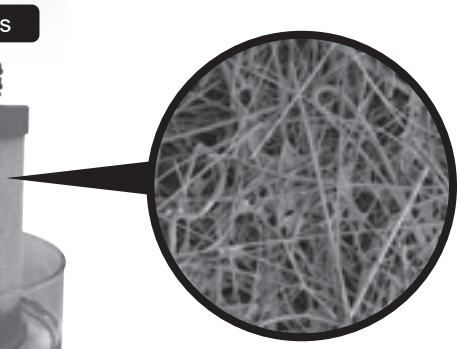

With hydrophobic/lipophobic borosilicate media, pressure loss is minimized.

AF2 Series variation

Removal of oil content (oil mist)
Removal of solids

Protects expensive pneumatic components.

- Removal of particles 1 µm and over
- Secondary side oil concentration
  Removes oil down to 0.3 mg/m^3 (21°C)
- End cap color: Red



P-Type

Highly efficient removal of oil contents (oil mist)
Highly efficient removal of solids

For pneumatic circuits which prohibit passage of oil.

- Removal of particles 0.01 µm and over
- Secondary side oil concentration
  Removes oil down to 0.01 mg/m^3 (21°C)
- End cap color: Blue



M-Type

Removal of oil vapor
Removal of odors

For pneumatic circuits which prohibit passage of odors.

- Suction by activated carbon
- Secondary side oil concentration
  Removes oil vapor and odors up to 0.003 mg/m^3 (21°C)
- End cap color: Black



X-Type



Medium main line filter

AF2 Series

Ideal for removal of solids, oil removing and deodorizing applications.
Processing air flow rate: 4.95 to 24.1 m³/min (ANR) (at 0.7 MPa)

JIS symbol P 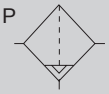 M 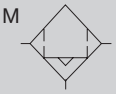 X 

CAD

Specifications

1 MPa ≈ 145.0 psi, 1 MPa = 10 bar

Item		AF2-05 □ 25A	AF2-08 □ 32A	AF2-11 □ 40A	AF2-13 □ 50A	AF2-20 □ 50A	AF2-24 □ 65A
Processing air flow rate	m³/min (ANR)	4.95	7.93	11.3	12.8	19.8	24.1
Working fluid		Compressed air					
Working pressure	MPa	0.1 (≈15 psi, 1 bar) to 1.0 (≈145 psi, 10 bar)					
Proof pressure	MPa	1.5 (≈217 psi, 15 bar)					
Port size	Rc	1	1 1/4	1 1/2	2		2 1/2
Weight	kg	2.2	6	5.9	5.7	6.9	13
Pop-up indicator		Standard equipment (Excluding X type)					
Drain discharger		Integrated (NO: with exhaust when not pressurized. Excluding X type)					
Drain outlet bore size	Rc	1/8 (Excluding X type)					

□ indicates type name.

Item		P type	M type	X type
Working ambient temperature	°C	5 (41°F) to 60 (140°F)		5 (41°F) to 50 (122°F)
Filtration	μm	1	0.01	Suction by activated carbon
Secondary side oil concentration	mg/m³	0.3	0.01	0.003
Initial pressure drop	MPa	0.0055 (≈0 psi, 0 bar)	0.0085 (≈1 psi, 0 bar)	0.0115 (≈1 psi, 0 bar)
Regular pressure drop	MPa	0.0125 (≈1 psi, 0 bar)	0.0125 (≈1 psi, 0 bar)	–

*1. Processing air flow rate is the atmospheric pressure conversion value where the inlet pressure is 0.7 MPa.
*2. ANR indicates conditions of 20°C atmospheric pressure and relative humidity 65%.
*3. The secondary side oil concentration is the value when the inlet air temperature is 21°C.
*4. The drain discharger is NO. Air is purged with initial drainage until pressure reaches 0.1 MPa.
*5. The P/M elements must be replaced after one year or when the pop-up indicator turns red, whichever is faster.
*6. Replace the X element after 1000 hours (at 21°C) or when the deodorizing effect is lost.
*7. The X type has a ball valve (G1/4) at the discharge outlet.
*8. The initial pressure drop is 0.008 MPa for AF2-20P50A and 0.011 MPa for AF2-20M50A.

How to order

AF2 - 05 P 25A

- Ⓐ Flow rate classification
- Ⓑ Element
- Ⓒ Bore size

Code	Description
Ⓐ Flow rate classification	
05	4.95 m³/min (ANR)
08	7.93 m³/min (ANR)
11	11.3 m³/min (ANR)
13	12.8 m³/min (ANR)
20	19.8 m³/min (ANR)
24	24.1 m³/min (ANR)
Ⓑ Element	
P	P type (solid/oil removing filter)
M	M type (high-performance solid/oil removing filter)
X	X type (odor removing filter)
Ⓒ Bore size	
25A	Rc1
32A	Rc1 1/4
40A	Rc1 1/2
50A	Rc2
65A	Rc2 1/2

⚠ Note on model No. selection

The unit's full performance may not be obtained if used at less than the selected pressure. Be sure to select the model No. with your working pressure.

Flow rate compensation coefficient

Pressure (MPa)	Compensation coefficient
0.1	0.38
0.2	0.53
0.3	0.65
0.4	0.76
0.5	0.84
0.6	0.92
0.7	1.0
0.8	1.07
0.9	1.13
1.0	1.19

If working pressure is other than 0.7 MPa, multiply processing air flow rate by the above coefficient.

Internal structure and parts list

● P, M types

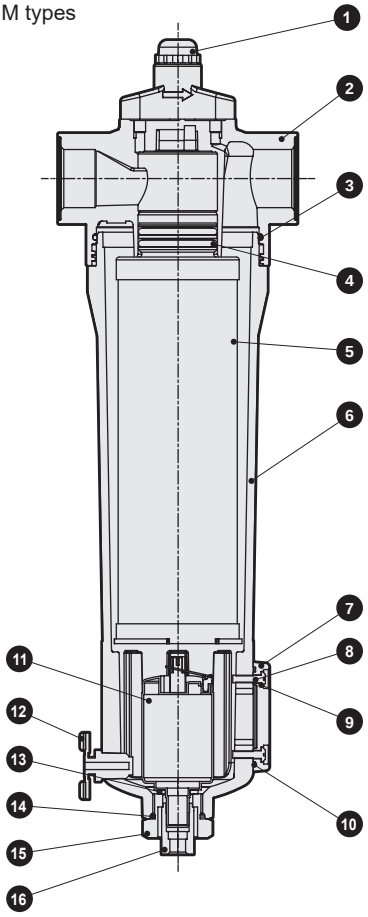

Parts list

No.	Part name	Material
1	Pop-up indicator	Polyamide resin
2	Cover	Aluminum
3	O-ring	Nitrile rubber
4	O-ring	Nitrile rubber
5	Element	
6	Bowl	Aluminum
7	Observation glass	Polyamide resin
8	Small machine screw	Steel
9	Packing	Polyamide resin
10	Packing	Nitrile rubber
11	Auto-drain	
12	Valve	Copper alloy
13	Packing	Nitrile rubber
14	O-ring	Nitrile rubber
15	Drain adapter	Aluminum
16	Adapter nut	Copper alloy

● X type

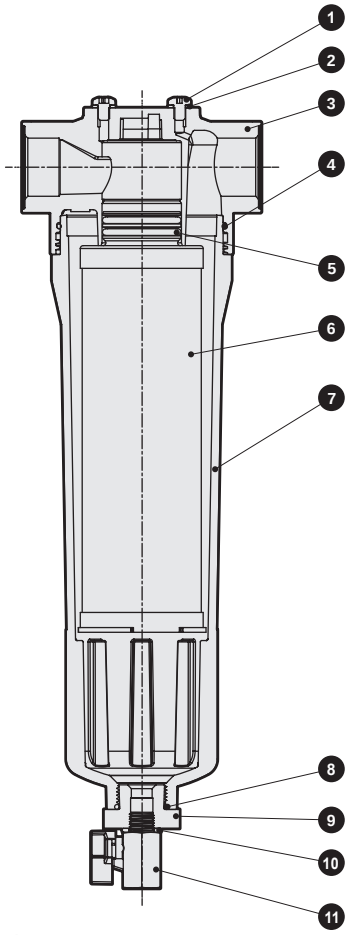

Parts list

No.	Part name	Material
1	Small machine screw	Steel
2	Seal washer	Polyamide resin, Nitrile rubber
3	Cover	Aluminum
4	O-ring	Nitrile rubber
5	O-ring	Nitrile rubber
6	Element	
7	Bowl	Aluminum
8	O-ring	Nitrile rubber
9	Drain adapter	Aluminum
10	Seal washer	Steel, nitrile rubber
11	Valve	Copper alloy

Consumable parts list

Consumable parts kits model No. / Model	O-ring (3) (4) (14) (For X type: (4) (5) (8))	Auto-drain (11) (13) (16)
AF2-05 ☐ 25A	AF2-05K-FLA12532	AF2-DRN-FLA14439
AF2-08 ☐ 32A	AF2-08K-FLA12533	
AF2-11 ☐ 40A		
AF2-13 ☐ 50A		
AF2-20 ☐ 50A		
AF2-24 ☐ 65A	AF2-24K-FLA12534	

The P/M/X type name is indicated on the ☐.
The O-ring kit consists of two O-rings for elements, one for the bowl, and one for the nut.
The auto-drain kit consists of a float section, hexagon nut and packing.
The drain discharger cannot be mounted on the X type.

Element kit

Consumable parts kit model No. / Model	P type Element (3) (4) (5)	M type Element (3) (4) (5)	X type Element (4) (5) (6)
AF2-05 ☐ 25A	AF2-05P-FLA09029	AF2-05M-FLA09030	AF2-05X-FLA09031
AF2-08 ☐ 32A	AF2-08P-FLA09032	AF2-08M-FLA09033	AF2-08X-FLA09034
AF2-11 ☐ 40A	AF2-08P-FLA09032	AF2-08M-FLA09033	AF2-08X-FLA09034
AF2-13 ☐ 50A	AF2-08P-FLA09032	AF2-08M-FLA09033	AF2-08X-FLA09034
AF2-20 ☐ 50A	AF2-20P-FLA09035	AF2-20M-FLA09036	AF2-20X-FLA09037
AF2-24 ☐ 65A	AF2-24P-FLA09038	AF2-24M-FLA09039	AF2-24X-FLA09040

Dimensions

●AF2-05P25A to AF2-24P65A
AF2-05M25A to AF2-24M65A

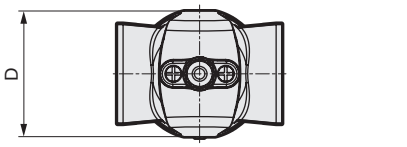

●AF2-05X25A to AF2-24X65A

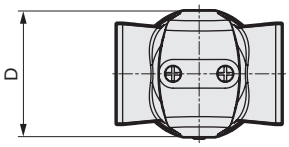

●With bracket

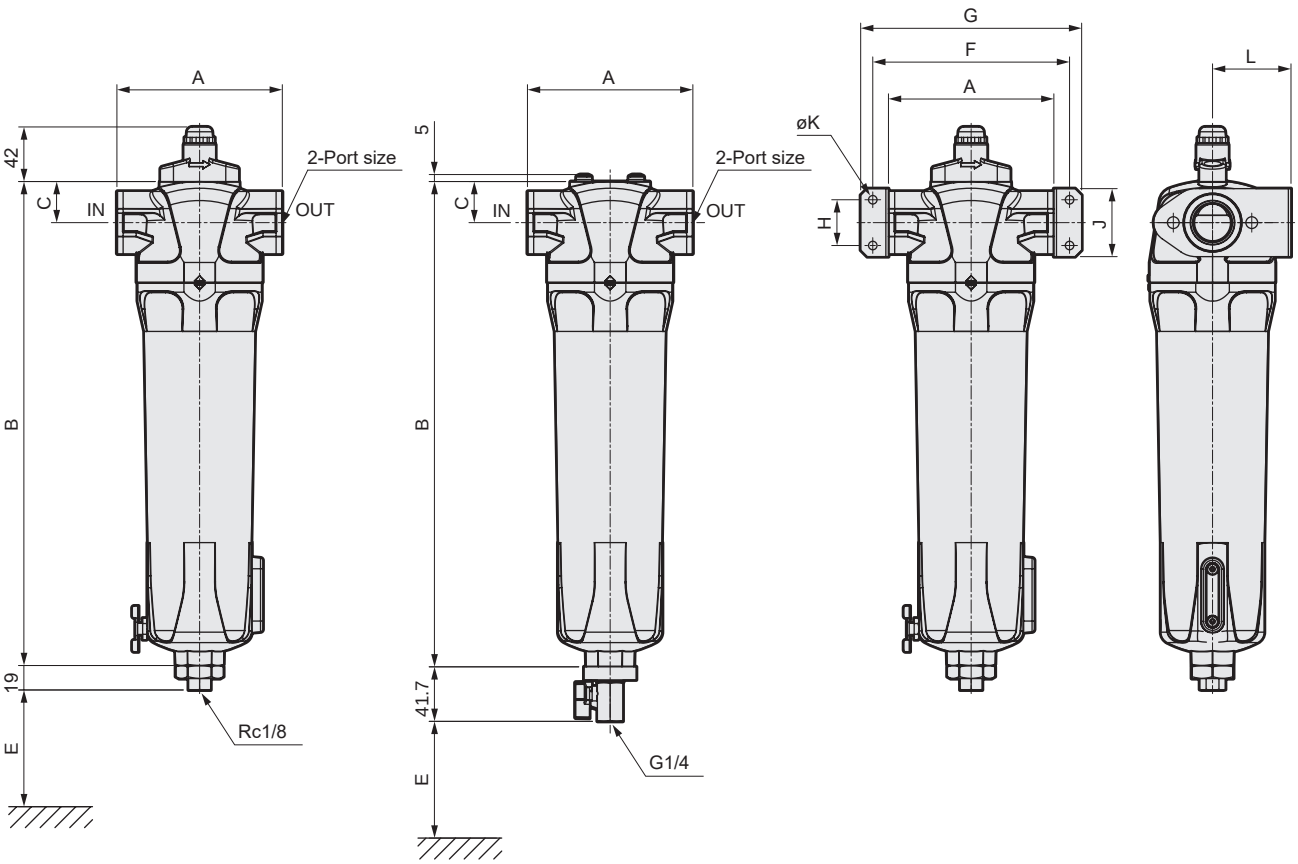

Model No.	Port size	A	B	C	D	E	F	G	H	J	K	L
AF2-05P25A/05M25A	Rc1	127	370	31.4	96	80	151	169	36	52	6.5	60
AF2-05X25A	Rc1	127	370	31.4	96	80	151	169	36	52	6.5	60
AF2-08P32A/08M32A	Rc1¼	170	508	53	133	100	206	230	65	95	9	90
AF2-08X32A	Rc1¼	170	508	53	133	100	206	230	65	95	9	90
AF2-11P40A/11M40A	Rc1½	170	508	53	133	100	206	230	65	95	9	90
AF2-11X40A	Rc1½	170	508	53	133	100	206	230	65	95	9	90
AF2-13P50A/13M50A	Rc2	170	508	53	133	100	206	230	65	95	9	90
AF2-13X50A	Rc2	170	508	53	133	100	206	230	65	95	9	90
AF2-20P50A/20M50A	Rc2	170	708	53	133	100	206	230	65	95	9	90
AF2-20X50A	Rc2	170	708	53	133	100	206	230	65	95	9	90
AF2-24P65A/24M65A	Rc2½	219	735	69	185	100	257	283	95	125	11	118
AF2-24X65A	Rc2½	219	735	69	185	100	257	283	95	125	11	118

The X type does not have a pop-up indicator.

The E dimension shows the minimum dimension required to remove the element. When actually installing the auto-drain, consider the piping dimensions and maintainability of the auto-drain and set dimensions with sufficient margin.

Configurations table

Bracket kit

Model	Model No.
AF2-05□	AF2-05M-FLA12524
AF2-08□ to AF2-20□	AF2-08M-FLA12525
AF2-24□	AF2-24M-FLA12526

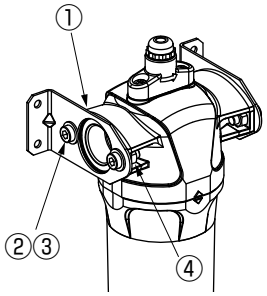

No.	Part name	Quantity
(1)	Mounting bracket	2
(2)	Hexagon socket head cap screw	4
(3)	Flat washer	4
(4)	Hexagon nut	4

Modular kit

Model	Model No.
AF2-05□	AF2-05C-FLA12521
AF2-08□ to AF2-20□	AF2-08C-FLA12522
AF2-24□	AF2-24C-FLA12523

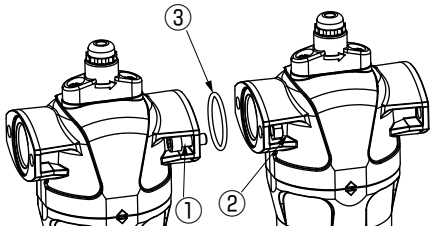

No.	Part name	Quantity
(1)	Hexagon socket head cap screw	2
(2)	Hexagon nut	2
(3)	O-ring	1
Accessory	Allen wrench (mounting tool)	1

Pop-up indicator

Model	Model No.
AF2-05□ to AF2-24□	AF2-DPU-FLA12527

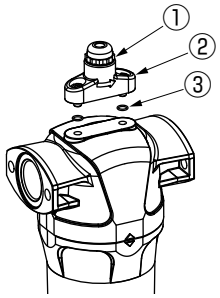

No.	Part name	Quantity
(1)	Pop-up indicator	1
(2)	Mounting screw	2
(3)	O-ring	2

Piping adapter

Made-to-order product

Model		Model No.
AF2-05□	For Rc1	AF2-05A-FLA15316
	For G1	AF2-05A-FLA15317
	For NPT1	AF2-05A-FLA15318
AF2-08□	For Rc1 $^1/_4$	AF2-08A-FLA15319
	For G1 $^1/_4$	AF2-08A-FLA15320
	For NPT1 $^1/_4$	AF2-08A-FLA15321
AF2-11□	For Rc1 $^1/_2$	AF2-11A-FLA15322
	For G1 $^1/_2$	AF2-11A-FLA15323
	For NPT1 $^1/_2$	AF2-11A-FLA15324
AF2-13□, AF2-20□	For Rc2	AF2-13A-FLA15325
	For G2	AF2-13A-FLA15326
	For NPT2	AF2-13A-FLA15327
AF2-24□	For Rc2 $^1/_2$	AF2-24A-FLA15328
	For G2 $^1/_2$	AF2-24A-FLA15329
	For NPT2 $^1/_2$	AF2-24A-FLA15330

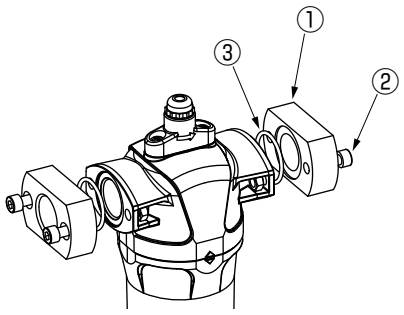

No.	Part name	Quantity
(1)	Piping adapter	2
(2)	Hexagon socket head cap screw	4
(3)	O-ring	2
(4)	Hexagon nut	4

Safety Precautions

Be sure to read this section before use.
For general precautions, refer to Intro Page 63.

Series/Product-specific cautions: Medium main line filter AF2 Series.

Manufacturer's Exemption of Liability

⚠ WARNING

- The manufacturer cannot be held liable in the following cases:
  - In the case of serious errors in the operator's use.
  - Inappropriate modifications or repairs using nonstandard parts, made by the user.

Design/selection

⚠ WARNING

- Do not use for applications other than compressed air.
- Do not use for caisson shields or medical equipment such as breathing devices.
  - There is a risk of personal injury.
- Do not mount or use this device on transportation equipment such as vehicles or ships.
  - The internal components could be damaged by vibration, etc.
- Avoid direct sunlight and rainwater.
  The resin parts, etc., could deteriorate and break.
- Do not use in locations with corrosive gases.
- Use this product within the operating ambient temperature range.

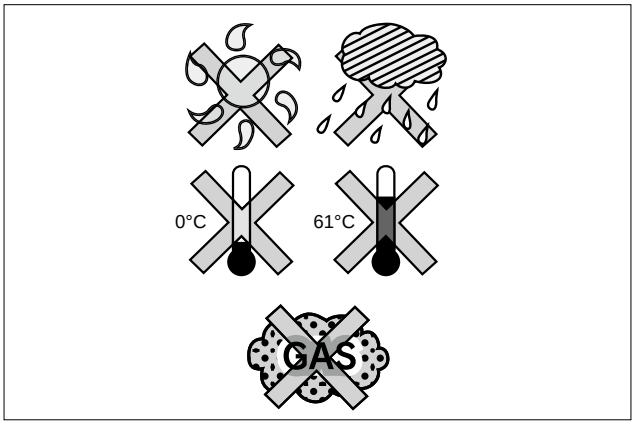

- Do not use in locations at risk of freezing. The accumulated drainage could freeze and damage the product.
- Do not use in hazardous locations (potentially explosive atmospheres, etc.).
- We recommend keeping the inlet air temperature as low as possible.The oil removing rate will drop if the temperature is high.
- Avoid using this product where ozone is generated.
- Avoid using this product where vibration and impact are present.
- Do not use this product in areas containing dust, etc.
- Do not use this product in an environment in which the compressed air contains the following gases.

  · Sulfur dioxide/chlorine gas
  · Aromatic hydrocarbon compounds
  (For example, benzene, toluene, phenol, cyclohexane, etc.)
  · Chlorinated hydrocarbon compounds
  (For example, trichloroethylene, chloroform, etc.)
  · Ketones (For example, acetone, etc.)
  · Aldehydes
  (For example, formaldehyde, acetaldehyde, etc.)
  · Amines (For example, ethylamine, methylamine, etc.)

- Always set the air flow to within the working pressure range and the processing air rate.
  - Failure to observe this may prevent proper removal of water, dust and oil.
- Install indoors.

Mounting, installation and adjustment

⚠ CAUTION

- Do not step onto the body.
- When piping, remove coolant and rust preventing agent, etc.
- Secure enough space for maintenance and inspection.
- Do not mount directly after a valve which opens/closes suddenly.Do not install this filter in a system where a reverse flow could occur or where impact could be applied easily.
- Flush the drain piping with air blow before mounting to the main body to remove any foreign matter inside.
- As drainage is discharged with pressure, securely fix the piping at the drain port so that drainage does not splatter.
- Mount the bowl vertically facing downward. Failure to do so could cause drainage discharge malfunction.
  Lay the drain pipe so that it is not pressurized. Laying several pipes together or attaching a check valve will create a pressurized state. Do not lay the pipes in this state.
- Ensure that the product's weight can be sufficiently withstood when installing. Fix the inlet and outlet piping to the floor or ceiling with a holder or supporter, etc.
- When connecting pipes, make sure that the piping before and after is straight.
- Do not apply excessive force to the connected pipes. Excessive force could deform or damage the connection port threads or the fitting.
- Use a pipe with inner diameter ø5.7 to 6.0 that is 5 m or less in length for the P or M type drain discharger piping. Do not use vertical piping.
  The drain outlet is processed with female threads. Use that section when piping.
  When connecting the pipe, fix the nut with a wrench, etc. Do not apply excessive force to the threads.

Use/maintenance

⚠ WARNING

- Before removing the bowl, stop the compressed air, completely discharge the pressure in the bowl and confirm that there is no residual pressure.

⚠ CAUTION

- Do not use reverse airflow. Do not pressurize suddenly.
  Otherwise, the original performance may not be attained.
  There is a risk of damage.

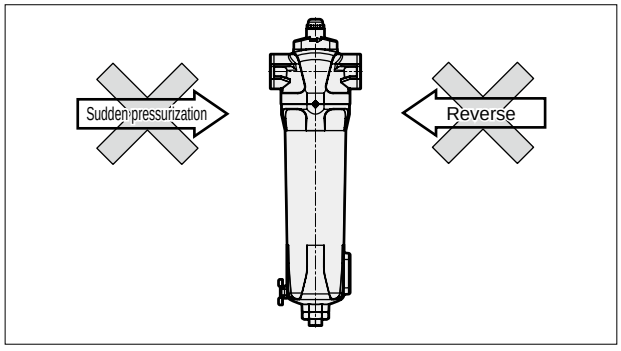

- The drain discharger is a normally open type. The compatible compressor capacity is 0.75 kW or more (discharge flow rate 90 L/min or more).
- The life of the filter is one year or when the pop-up indicator turns red, whichever comes first. Replace the element with a new one at the end of its life.
  (Note that the X type must be replaced after 1000 hours (at 21°C) or when the deodorizing effect is lost.)
- The drain discharger is air purged with the initially generated drainage until the pressure rises to 0.1 MPa.
- Release the air in the filter before servicing the drain discharger for a drain malfunction, etc. Wash the drain unit with water, and then blow out all moisture with an air gun.
- An air release valve is provided on the bottom of the filter, which can be used to release air and drain.

● Chemical resistance of drain discharger plastic bowl

Types of chemicals	Categories of chemicals	Main products of chemicals	General applications	Polycarbonate	Nylon
Inorganic compounds	Acids	Hydrochloric acid, sulfuric acid, fluorine, phosphoric acid, chromic acid, etc.	Acid washing of metals and acidic degreasing solutions Coating treatment solution	x	x
	Alkalines	Caustic soda, caustic potash, calcium hydroxide, aqueous ammonia, sodium carbonate, etc.	Alkaline degreasing solution for metals	x	○
	Inorganic salts	Sodium sulfide, potassium nitrate, potassium bichromate, sodium sulfate, etc.		x	○
Organic compounds	Aromatic hydrocarbons	Benzene, toluene, xylene, ethyl benzene, styrene, etc.	Contained in paint thinner (Benzene, toluene, and xylene)	x	x
	Chlorinated aliphatic hydrocarbons	Methyl chloride, ethylene chloride, methylene chloride, acetylene chloride, chloroform, trichlene, perchlene, carbon tetrachloride	Organic solvent-based washing solution for metals (Trichlene/perchlene/carbon tetrachloride, etc.)	x	○
	Chlorinated aromatic hydrocarbons	Chlorobenzene, dichlorobenzene, benzene hexachloride (B/H/C), etc.	Agricultural chemicals	x	○
	Petroleum components	Solvent, naphtha, gasoline		x	○
	Alcohols	Methyl alcohol, ethyl alcohol, cyclohexanol, benzyl alcohol	Used as antifreezing agent	x	x
	Phenol	Carbolic acid, cresol, naphthol, etc.	Disinfectant solution	x	x
	Ethers	Methyl ether, methyl ethyl ether, ethyl ether	Brake oil additive	x	○
	Ketones	Acetone, methyl ethyl ketone, cyclohexanone, acetophenone, etc.		x	x
	Carboxylic acids	Formic acid, acetic acid, butyl acid, acrylic acid, oxalic acid, phthalic acid, etc.	Dyes/oxalic acid are used for aluminum treatment Phthalic acid used for paint base	x	x
	Phosphate ester	Dimethyl phthalate (DMP), diethyl phthalate (DEP), dibutyl phthalate (DBP), dioctyl phthalate (DOP)	Lubricant, synthetic coolant, rust preventing agent additives Plasticizer for synthetic resin	x	○
	Oxyacids	Glycol acid, lactic acid, malic acid, citric acid, tartaric acid		x	x
	Nitro compounds	Nitromethane, nitroethane, nitroethylene, nitrobenzene, etc.		x	○
	Amines	Methylamine, dimethylamine, ethylamine, aniline, acetanilide, etc.	Brake oil additive	x	x
	Nitriles	Acetonitrile, acrylonitrile, benzonitrile, acetoisonitrile, etc.	Raw material for nitrile rubber	x	○

○: Usable ×: Not usable

Medium main line filter
AF4000 (oil-free)

■ Refining and pressure adjusting components/main line unit/air filter

Overview

High performance main line filter with stainless steel housing for clean environments.
Ideal for oil-free air lines.

Features

(1) Differential pressure gauge mounting port provided
A differential pressure gauge (option) mounting port is provided on the top of the filter.

(2) Easy element replacement
A band method has been adopted for tightening the housing.
The element can be replaced without tools.

(3) Time management of element replacement
The replacement time is managed by time (approx. one year). The replacement timing is indicated by a blinking lamp.

(4) Mechanism preventing the dislocation of the housing
The mechanism prevents the housing from falling when the hand cover is removed when replacing the element, etc.

(5) Highly reliable drain discharger mounted
A highly reliable automatic drain is provided for the drain discharger.
Drainage can be discharged without wasteful air loss.



CONTENTS

Product introduction	1856
● Medium pre-filter (AF4000P)	1858
● Medium solid removing filter (AF4000S)	1858
● Medium oil mist filter (AF4000M)	1858
● Medium deodorizing filter (AF4000X)	1858
Medium main line filter device recommended system configuration	1842
⚠ Safety precautions	1862

Supporting oil-free air lines

The high-performance main line filter AF4000 Series with stainless steel housing supports clean environments.
This filter is perfect for oil-free air lines.



Differential gauge mounting port

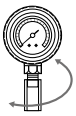

A mounting port for the differential pressure gauge (option) is provided on the top of the filter.

Preventing accidents



With residual pressure warning function

A band cover is provided as a standard to prevent unintentional removal of the band during operation or when there is a residual pressure. When the band cover's fixing screw is loosened, a small amount of air is leaked to notify the operator.

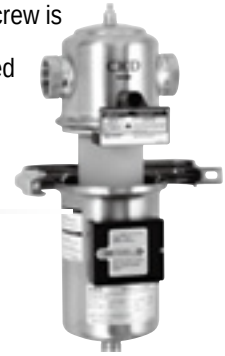

Easy element replacement

A band method is used to tighten the housing. There's no need to use tools when replacing the element.

Time-controlled element replacement timing



The conventional differential pressure method supported fluid type oil mist for which it was difficult to determine the replacement timing. The replacement timing is now controlled by time (approx. one year). A lamp flashes to alert the operator when the replacement timing arrives.

Housing drop-prevention mechanism

A mechanism is provided to prevent the housing from dropping when the band cover is removed for maintenance, such as when replacing the element.
The housing can be removed and mounted with both hands.



Highly reliable drain separator

A highly reliable snap drain (DT Series) is mounted on the drain separator.
Discharge drain without wasteful air loss.



M type element structure

- Removes particles 0.01 μm or larger in size
- Outlet oil concentration 0.01 mg/m³
- Normal pressure loss value is reduced

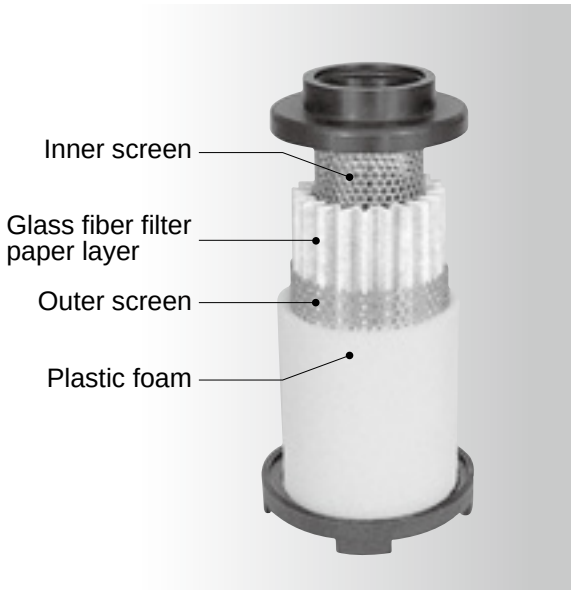

1. The waterproof and oil-proof glass fiber filter paper captures and condenses oil mist and reduced the pressure loss value.
2. The pleat structure ensures a wide filtration area.
3. Polyvinyl chloride resin has been eliminated in view of the global environment.

S type element structure

- Removes particles 1 μm or larger in size

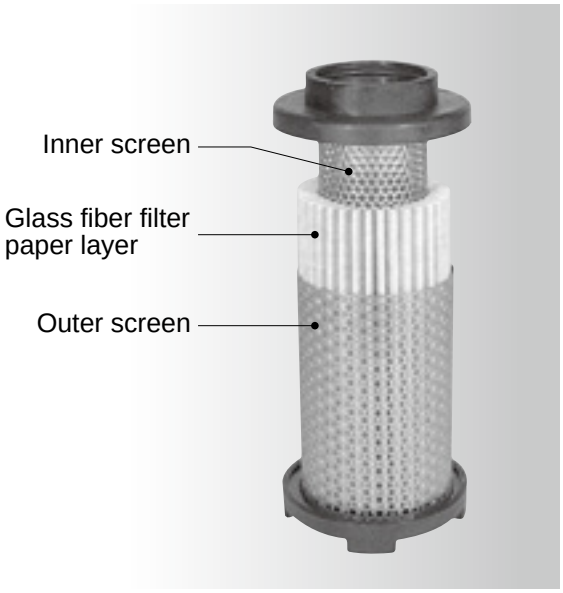

1. The standard glass fiber filtration paper improves the catching performance and water resistance.
2. The pleat structure ensures a wide filtration area.
3. A stable catching performance is realized even if there are water drops in the air.

AF4000 Series System

Water drop removal Solid particle removal

For air dryer pre-filter

- Removes particles 5 μm or larger
- Water drop separation rate 99%



P Type

Filter Solid particle removal

Protect your expensive air compressor

- Removes particles 1 μm or larger



S Type

Highly efficient removal of oil mist Highly efficient removal of solids

Suitable for pneumatic pressure circuits susceptible to oil

- Removes particles 0.01 μm or larger
- Secondary oil concentration Removes oil up to 0.01 mg/m³ (at 20˚C)



M Type

Oil vapor removal Odor removal

Suitable for pneumatic pressure circuits which are susceptible to odors

- Absorption with active carbon fibers
- Secondary oil concentration Removes vaporous oil mist and odors up to 0.003 mg/m³ (at 20˚C)



X Type

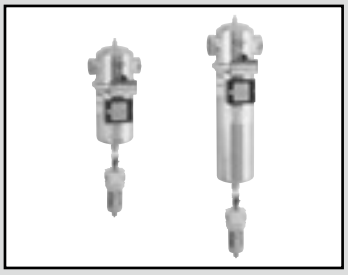

Medium main line stainless steel filter

AF4000P/S/M/X Series

Ideal for pre-filter, oil removal and deodorizing applications.

● Processing air flow rate: 3.7 to 18.8 m³/min (ANR) (at 0.7 MPa)

JIS symbol 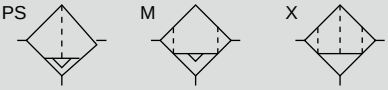

CAD

Specifications

Item	AF4004□-25	AF4007□-40	AF4010□-40	AF4013□-50	AF4020□-50
Processing air flow rate m³/min(ANR)	3.7	6.2	10	13	18.8
Working fluid	Compressed air				
Working pressure MPa	0.1 (≈15 psi, 1 bar) to 1.0 (≈150 psi, 10 bar)				
Ambient temperature °C	5 (41°F) to 60 (140°F)				
Proof pressure MPa	1.5 (≈220 psi, 15 bar)				
Port size Rc	1	1 1/2		2	
Weight kg	3	3.3	3.7	4.3	6
Element life indicator	Standard only for M type				
Drain discharger	DT3000-15-W (Excluding X type)				
Drain outlet bore size	Directly connecting bore size ø5.7 to ø6 nylon tube (Excluding X type)				

□ indicates series name.

1 MPa = 10 bar, °F = 9/5 °C + 32

Item			P type	S type	M type	X type
Performance	Processing air Conditions	Inlet air pressure MPa	0.7 (≈100 psi, 7 bar)			
		Inlet air temperature °C	32 (89.6°F)			
		Inlet air dew point °C	-	-	No water infiltration/droplet forming	Pressure dew point 10°C
		Inlet oil content mg/m³	-	-	3	0.01
	Filtration rating µm		5	1	0.01	Suction by activated carbon fibers
	Secondary side oil concentration mg/m³		-	-	0.01	0.003
	Water separation efficiency %		99	-	-	-
	Pressure drop	Initial MPa	0.005 (≈0.73 psi)	0.005 (≈0.73 psi)	0.01 (≈1.5 psi)	0.009 (≈1.3 psi)
	Element renew time	Pressure drop MPa	0.02 (≈3 psi)	0.07 (≈10 psi)	0.07 (≈10 psi)	-
		Duration of use	8000 hours or 1 year			

*1: Processing air flow rate is the atmospheric pressure conversion value where the inlet pressure is 0.7 MPa.
*2: ANR indicates conditions of 20°C atmospheric pressure and relative humidity 65%.
*3: The secondary side oil concentration is the value when the inlet air temperature is 20°C.
*4: The drain discharger is an NO. Air is purged with initial drainage until pressure reaches 0.1 MPa.
*5: The P/S/M type elements must be replaced when the pressure drops or the service life is reached, whichever comes first.
*6: Replace the X type element when the service life is reached or when the deodorizing effect is lost.
*7: P type is not available in AF4020.

How to order

AF4 | 004 | P | - | 25 | - | GA

Model No. | Ⓐ Flow rate classification | Ⓑ Element | Ⓒ Bore size | Ⓓ Included product

Code	Description
Ⓐ Flow rate classification	
004	3.7 m³/min(ANR)
007	6.2 m³/min(ANR)
010	10 m³/min(ANR)
013	13 m³/min(ANR)
020	18.8 m³/min (ANR) (S, M, or X only)
Ⓑ Element	
P	P type (solid/water removing filter)
S	S type (solid removing filter)
M	M type (oil mist removing filter)
X	X type (deodorizing filter)
Ⓒ Bore size	
25	Rc1
40	Rc1 1/2
50	Rc2
Ⓓ Included product	
GA	Differential pressure gauge (GA400-8-P02) enclosed
EL	Element life indicator attached

(An element life indicator is mounted on the M type as standard.)

⚠ Note on model No. selection

The required performance may not be attained if using at a level less than the selected pressure. Always select the model No. with the working pressure.

Flow rate compensation coefficient

Pressure (MPa)	Auxiliary coefficient
0.2	0.36
0.3	0.5
0.4	0.62
0.5	0.75
0.6	0.88
0.7	1.0
0.8	1.13
0.9	1.25
1.0	1.38

If the inlet pressure is not 0.7 MPa, multiply the coefficient above with the processing air flow rate.

Internal structure and parts list

● P, S, M types

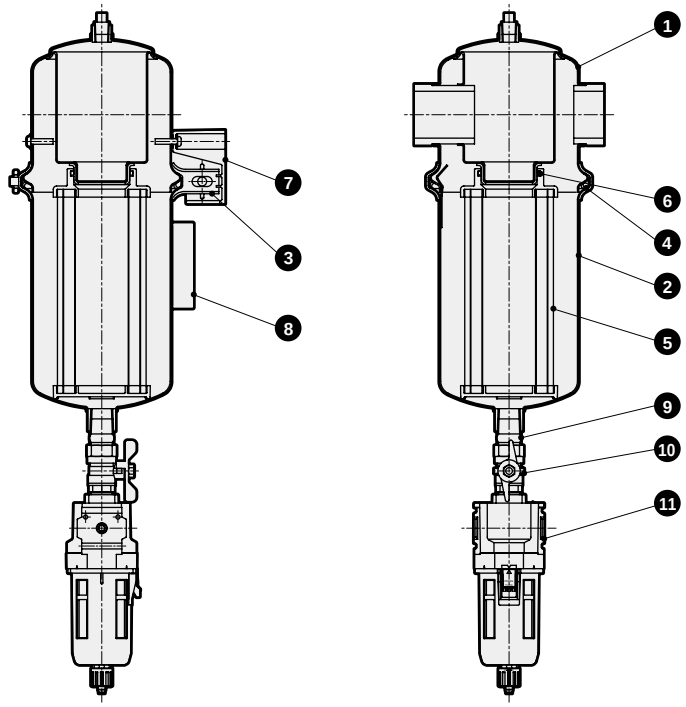

Parts list

No.	Part name	Material
1	Cover	SUS304
2	Bowl	SUS304
3	Band	SUS304
4	O-ring	NBR
5	Element	
6	O-ring	NBR
7	Band cover	Polyamide
8	Element life indicator	
9	Nipple	SUS304
10	Ball valve	C3771, PTFE, SUS, etc.
11	Drain discharger	DT3000-15-W

Drain discharger and ball valve are attached.
The element life indicator is mounted only on the M type.

● X type

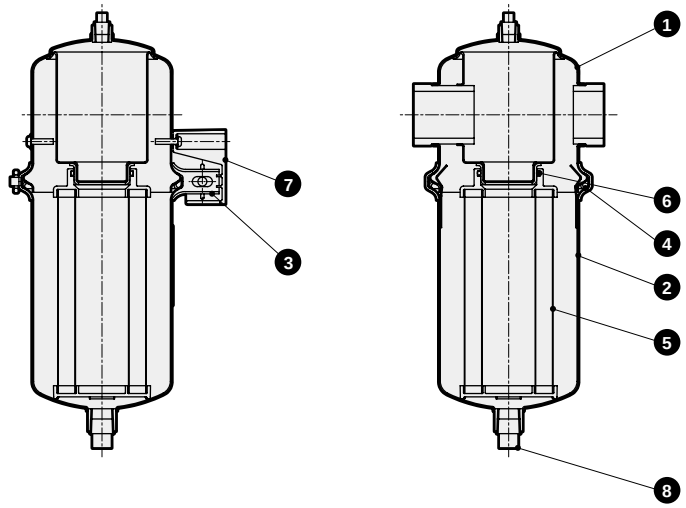

Parts list

No.	Part name	Material
1	Cover	SUS304
2	Bowl	SUS304
3	Band	SUS304
4	O-ring	NBR
5	Element	
6	O-ring	NBR
7	Band cover	Polyamide
8	Plug	SUS304

Dimensions CAD

● AF4004P/S/M to AF4020S/M

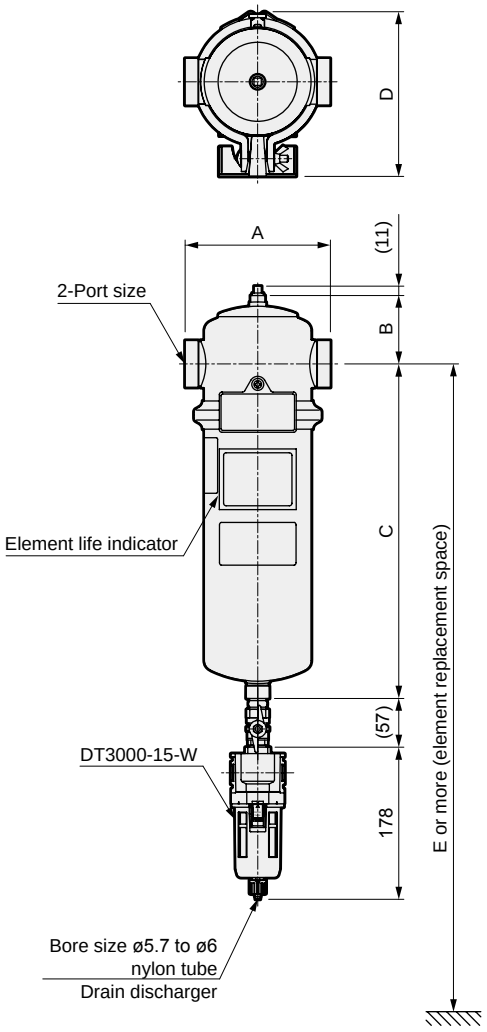

● AF4004X to AF4020X

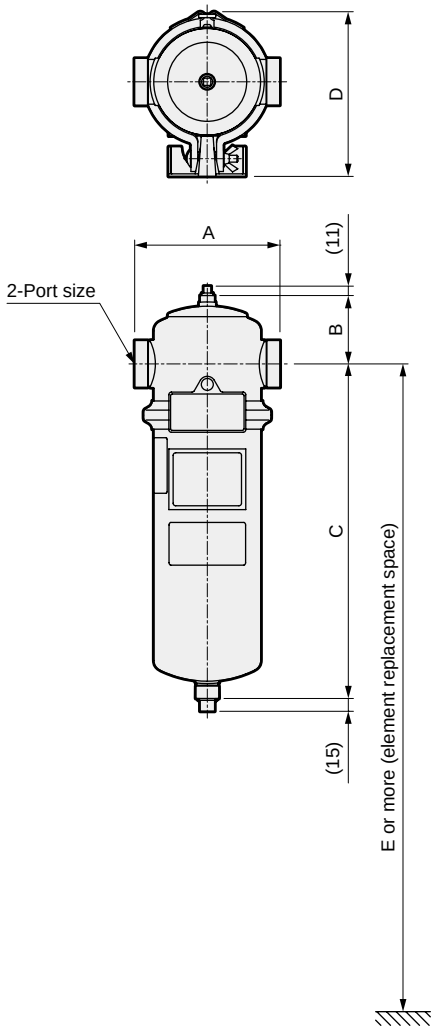

Model No.	Port size	A	B	C	D	E
AF4004P/S/M/X-25	Rc1	160	72.5	209	192.7	570
AF4007P/S/M/X-40	Rc1 1/2	170	80	283.5	192.7	730
AF4010P/S/M/X-40	Rc1 1/2	170	80	391.5	192.7	940
AF4013P/S/M/X-50	Rc2	173	86.5	478	192.7	1100
AF4020S/M/X-50	Rc2	173	86.5	635	192.7	1420

The element life indicator is mounted only on the M type.
E dimensions indicate the maintenance space.
Drain discharger and ball valve are attached.

Repair parts list

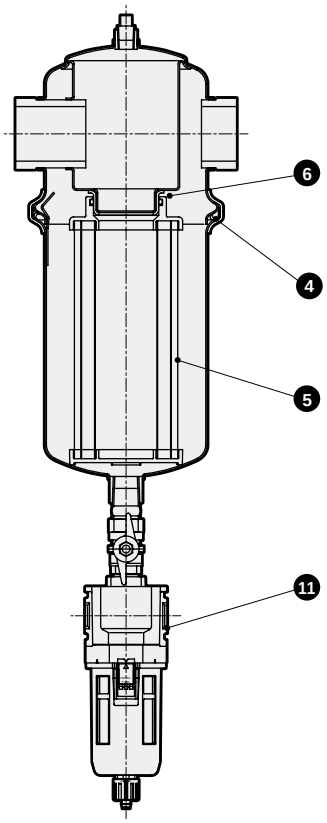

Repair parts list

Repair parts kit No. / Model	O-ring ④	Drain discharger ⑪
AF4004*-25	AF4004P-QFL-391648	DT3000-15-W
AF4007*-40		
AF4010*-40		
AF4013*-50		
AF4020*-50		

The P/S/M/X Series name is indicated with *.
The drain discharger cannot be mounted on the X Series.

Element

Repair parts kit No. / Model	P type element	S type element	M type element	X type element
AF4004*-25	AF4004P-KFL-391451	AF4004S-KFL-391461	AF4004M-KFL-391471	AF4004X-KFL-391481
AF4007*-40	AF4007P-KFL-391452	AF4007S-KFL-391462	AF4007M-KFL-391472	AF4007X-KFL-391482
AF4010*-40	AF4010P-KFL-391453	AF4010S-KFL-391463	AF4010M-KFL-391473	AF4010X-KFL-391483
AF4013*-50	AF4013P-KFL-391454	AF4013S-KFL-391464	AF4013M-KFL-391474	AF4013X-KFL-391484
AF4020*-50	-	AF4020S-KFL-391465	AF4020M-KFL-391475	AF4020X-KFL-391485

The P/S/M/X Series name is indicated with *.
The element kit consists of an O-ring ⑥ and element ⑤.
The O-ring ⑥, element ⑤ and battery kit applies only for the M type element.

Pneumatic components (Main line unit)

Safety Precautions

Be sure to read this section before use.
Refer to Intro Page 63 for general precautions.

Series/Product-specific cautions: Medium main line filter AF4000 Series

Manufacturer's Exemption of Liability

⚠ WARNING

■ The manufacturer cannot be held liable in the following cases:
- In the case where there are serious errors in the operator's use.
- Inappropriate modifications or repairs using nonstandard parts, made by the user.

Design/selection

⚠ WARNING

■ Do not use for applications other than compressed air.

■ Do not use for caisson shields or medical devices such as breathing devices.
- There is a risk of personal injury.

■ Do not mount and use this device on transportation equipment such as vehicles or ships.
- The internal devices could be damaged by vibration, etc.

■ Avoid direct sunlight and rainwater. The resin parts, etc., could deteriorate and break.

■ Do not use in locations with corrosive gases.

■ Use this product within the operating ambient temperature.

■ Do not use in locations at risk of freezing. The accumulated drainage could freeze and damage the product.

■ Do not use in hazardous locations (possibly explosive atmospheres, etc.).

■ We recommend keeping the inlet air temperature as low as possible. The oil removing rate will drop if the temperature is high.

■ Do not use this product in an ozone generating environment.

■ Avoid using this product where vibration and impact are present.

■ Do not use this product in areas containing dust, etc.

■ Do not use this product in an environment in which the compressed air contains the following types of gases.
- Sulfur dioxide/chlorine gas
- Aromatic hydrocarbon compounds
  (For example, benzene, toluene, phenol, cyclohexane, etc.)
- Chlorinated hydrocarbon compounds
  (For example, trichloroethylene, chloroform, etc.)
- Ketones (for example, acetone, etc.)
- Aldehydes
  (For example, formaldehyde or acetaldehyde, etc.)
- Amines (For example, ethylamine, methylamine, etc.)

■ Always set the air flow to within the working pressure range, and use treated air.
- Failure to observe this may prevent proper removal of water, dust and oil.

■ Install indoors.

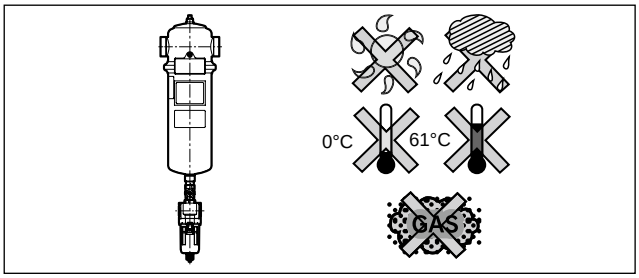

Mounting, installation and adjustment

⚠ CAUTION

■ Do not step onto the body.

■ When piping, remove coolant and rust preventing agent, etc.

■ Secure enough space for maintenance and inspection.

■ Do not mount directly after a valve which opens/ closes suddenly. Do not install this filter in a system where a reverse flow could occur or where impact could be applied easily.

■ Flush the drain piping with air blow before mounting to the main body to remove any foreign matter inside.

■ Use a pipe with an inner diameter ø5.7 to 6.0 that is 5 m or less in length for the P, S or M type drain discharger piping. Do not use vertical piping.

■ As drainage is discharged with pressure, securely fix the piping at the drain port so that drainage does not splatter.

■ When mounting a differential pressure gauge on the P, S or M type, check the high pressure side and low pressure side ports, and mount properly.

■ Mount the bowl vertically facing downward. Failure to do so could cause drainage discharge faults. Lay the drain pipe so that it is not pressurized. Laying several pipes together or attaching a check valve will create a pressurized state. Do not lay the pipes in this state.

■ Ensure that the product's weight can be sufficiently withstood when installing. Fix the inlet and outlet piping to the floor or ceiling with a holder or supporter, etc.

■ When connecting pipes, make sure that the front and back pipes are straight.

■ Do not apply excessive force on the connected pipes. Excessive force could deform or damage the connection port threads or the fitting.

Use/maintenance

⚠ WARNING

■ Confirm that no pressure is applied before removing the band.

⚠ CAUTION

■ Do not use reverse airflow.
Do not pressurize suddenly.
Otherwise, original performance may not be attained. There is a risk of damage.

■ The drain discharger is an NO. The compatible compressor capacity is 0.75 kW or more (discharge flow rate 90 ℓ/min. or more).

■ The air filter service life is reached when the pressure drops, or after 8000 hours or one year of use. Replace the element with a new one at the end of its life. When using an element life indicator, replace the indicator battery with a new one when replacing the element.
(Replace the X type element when the service life is reached, or when the deodorizing effect is lost.)

■ The M type is equipped with an element life indicator as a standard, so the element's service life can be seen at a glance.

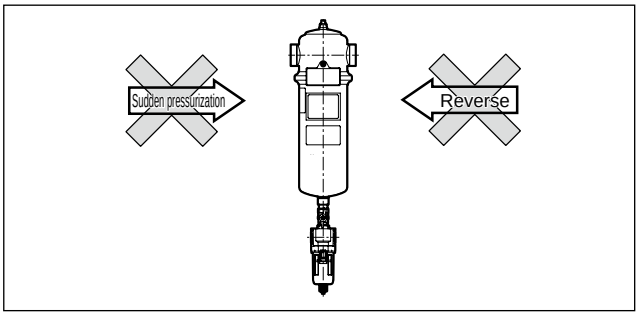

■ The drain discharger is air purged with the initially generated drainage until the pressure rises to 0.1 MPa.

■ Close the stop valve and release the air in the drain discharger bowl before servicing the drain discharger for a drain fault, etc. Wash the drain unit with water, and then blow out all moisture with an air gun.

■ Use a household neutral detergent to wash the bowl, and then rinse with water.

■ The drain discharger bowl is made of polycarbonate. Avoid using the following chemicals or using the product in an atmosphere containing these chemicals.

● Chemical resistance of drain discharger plastic bowl

○: Available ×: Not available

Types of chemicals	Categories of chemicals	Main products of chemicals	General applications	Polycarbonate	Nylon
Inorganic compound	Acids	Hydrochloric acid, sulfuric acid, fluorine, phosphoric acid, chromic acid, etc.	Acid washing of metals, acidic degreasing solutions, coating treatment solutions	×	×
	Alkalines	Caustic soda, caustic potash, calcium hydroxide, aqueous ammonia, sodium carbonate, etc.	Alkaline degreasing solution for metals	×	○
	Inorganic salts	Sodium sulfide, potassium nitrate, potassium bichromate, sodium sulfate, etc.		×	○
Organic compound	Aromatic hydrocarbons	Benzene, toluene, xylene, ethyl benzene, styrene, etc.	Contained in paint thinner (benzene, toluene, and xylene)	×	×
	Chlorinated aliphatic hydrocarbons	Methyl chloride, ethylene chloride, methylene chloride, acetylene chloride, chloroform, trichlene, perchlene, carbon tetrachloride	Organic solvent-based washing solution for metals (trichlene, perchlene, carbon tetrachloride, etc.)	×	○
	Chlorinated aromatic hydrocarbons	Chlorobenzene, dichlorobenzene, benzene hexachloride (B/H/C), etc.	Agricultural chemicals	×	○
	Petroleum components	Solvent, naphtha, gasoline		×	○
	Alcohols	Methyl alcohol, ethyl alcohol, cyclohexanol, benzyl alcohol	Used as antifreezing agent	×	×
	Phenol	Carbolic acid, cresol, naphthol, etc.	Disinfectant solution	×	×
	Ethers	Methyl ether, methyl ethyl ether, ethyl ether	Additive of brake oil	×	○
	Ketones	Acetone, methyl ethyl ketone, cyclohexanone, acetophenone, etc.		×	×
	Carboxylic acids	Formic acid, acetic acid, butyl acid, acrylic acid, oxalic acid, phthalic acid, etc.	Dyes/oxalic acid for aluminum processing, phthalic acid for paint base	×	×
	Phosphate ester	Dimethyl phthalate (DMP), diethyl phthalate (DEP), dibutyl phthalate (DBP), dioctyl phthalate (DOP)	Lubricant, synthetic coolant, rust preventing agent additive plasticizer for synthetic resin	×	○
	Oxyacids	Glycol acid, lactic acid, malic acid, citric acid, tartaric acid		×	×
	Nitro compounds	Nitromethane, nitroethane, nitroethylene, nitrobenzene, etc.		×	○
	Amines	Methylamine, dimethylamine, ethylamine, aniline, acetanilide, etc.	Additive of brake oil	×	×
	Nitriles	Acetonitrile, acrylonitrile, benzonitrile, acetoisonitrile, etc.	Raw material for nitrile rubber	×	○

Large main line filter device recommended system configuration

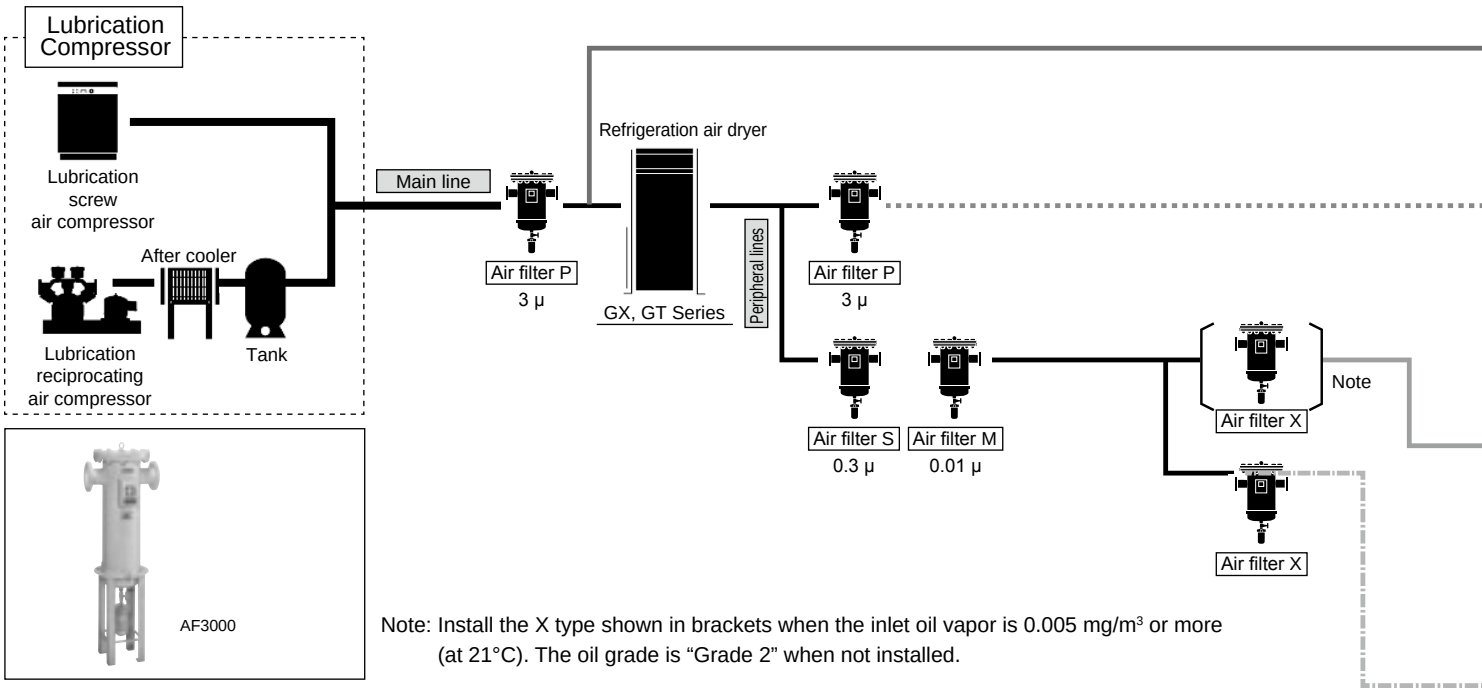

Note: Install the X type shown in brackets when the inlet oil vapor is 0.005 mg/m³ or more (at 21°C). The oil grade is "Grade 2" when not installed.

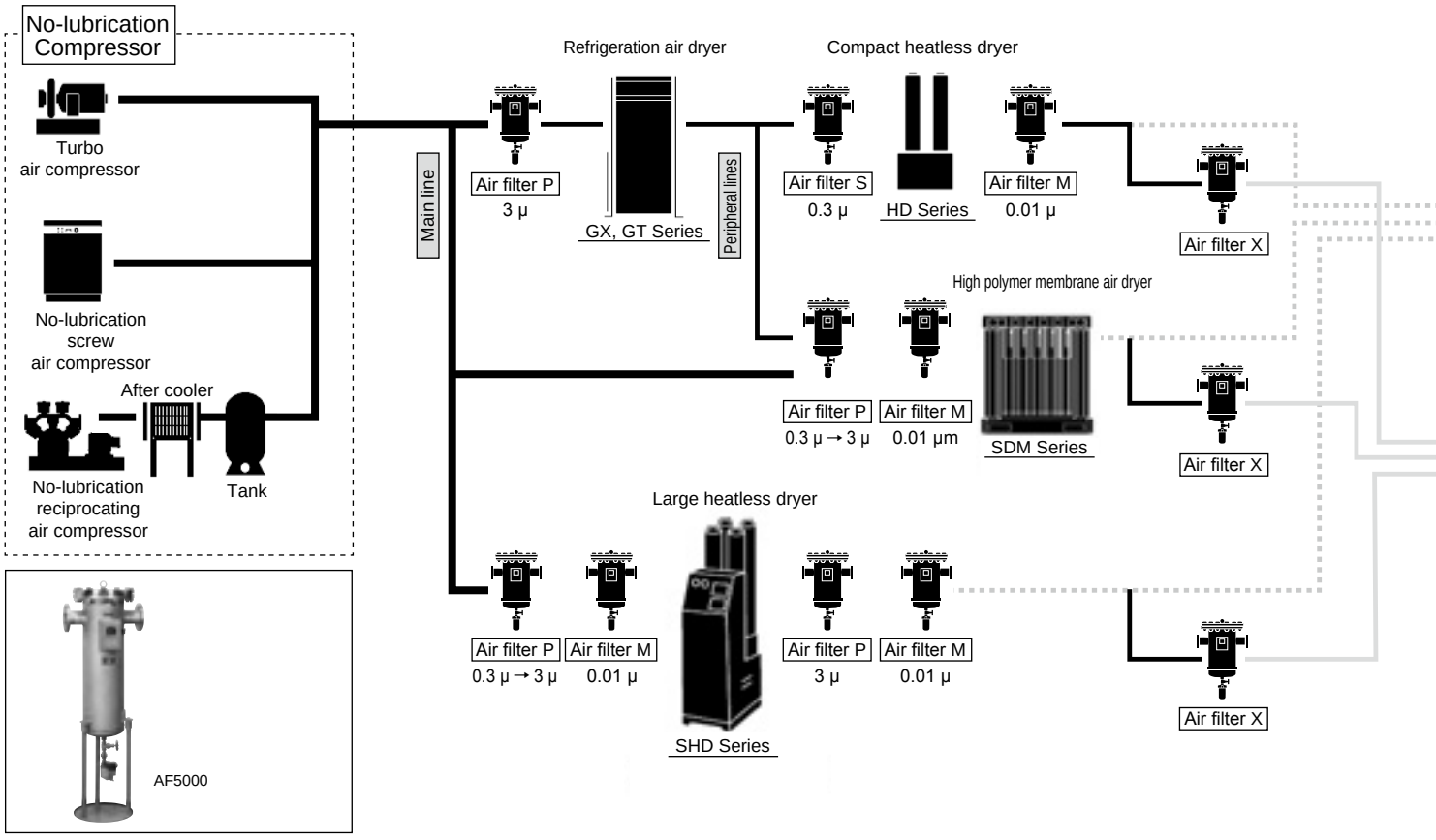

JIS B 8392-1:2012 Compressed air purity grade

Grade	Solid particles				Humidity and moisture		Oil
	Max. number of particles per 1 m³ for particle diameter d (µm)			Mass concentration Cp	Pressure dew point	Water concentration Cw	Total oil concentration
	0.1 < d ≤ 0.5	0.5 < d ≤ 1.0	1.0 < d ≤ 5.0	mg/m³	°C	g/m³	mg/m³
0	Conditions stricter than Grade 1 to be specified by user or supplier.						
1	≤ 20,000	≤ 400	≤ 10	-	≤ -70	-	≤ 0.01
2	≤ 400,000	≤ 6,000	≤ 100	-	≤ -40	-	≤ 0.1
3	-	≤ 90,000	≤ 1,000	-	≤ -20	-	≤ 1
4	-	-	≤ 10,000	-	≤ +3	-	≤ 5
5	-	-	≤ 100,000	-	≤ +7	-	-
6	-	-	-	0 < Cp ≤ 5	≤ +10	-	-
7	-	-	-	5 < Cp ≤ 10	-	Cw ≤ 0.5	-
8	-	-	-	-	-	0.5 < Cw ≤ 5	-
9	-	-	-	-	-	5 < Cw ≤ 10	-
X	-	-	-	Cp > 10	-	Cw > 10	> 5

JIS B 8392-1:2003 has been revised to JIS B 8392-1:2012.

For example,
What is Grade 1:2:1?

- Solid particles 0.1 to 0.5 µm are 20,000 particles or less,
  0.5 to 1.0 µm are 400 particles or less, and
  1.0 to 5.0 µm are 10 particles or less
- Pressure dew point -40°C or less
- Oil concentration 0.01 mg/m³ or less.

Air quality	Applications	Impurities in air			Grade
		Solid particle	Moisture	Oil content	
Water drip removal air/ coarse dust removal air	For construction/civil engineering machinery Air for cleaning (dry air not required)	3 µm	-	-	4.-.-
General dry air	General pneumatic components General pneumatic tools Labor saving components Pneumatic jigs and tools Air chuck Air vice Air for cleaning precision parts	3 µm	Pressure dew point 10°C	0.5 mg/m^3	4.6.3
			Pressure dew point 7°C		4.5.3
Dry air (oil-free)	Instrumentation Measurement Sequence control High-grade coating	0.01 µm	Pressure dew point 10°C	0.01 mg/m^3 [0.003 mg/m^3]	1.6.1
			Pressure dew point 7°C		1.5.1
Dry air (odorless)	Food processing industry (where air is not directly blown onto food) Pharmaceutical industry Agitation/transportation/dry/package/air for brewing	0.01 µm	Pressure dew point 10°C	0.003 mg/m^3	1.6.1
			Pressure dew point 7°C		1.5.1
Ultra dry air (oil-free)	Ozone generator Powder transfer Drying furnace gas Drying the insulation gas of a high-voltage generator Drying computer rooms Centralized control instrumentation	0.01 µm	Pressure dew point -20°C	0.01 mg/m^3	1.3.1
			Pressure dew point -40°C		1.2.1
			Pressure dew point -60°C		1.2.1
Ultra dry air (odorless)	Food processing industry (where air is not directly blown onto food) Pharmaceutical industry Agitation/transportation/dry/package/air for brewing	0.01 µm	Pressure dew point -20°C	0.003 mg/m^3	1.3.1
			Pressure dew point -40°C		1.2.1
			Pressure dew point -60°C		1.2.1

⚠ Precautions for system selection

*1: If your conditions are different, refer to the specifications in the catalog in order to select a model.
*2: This example of sy stem selection is based on an air-cooling refrigeration air dryer.
When making a selection based on an air-cooling refrigeration air dryer, since the standard processing air flow rate may differ, the model No. of the filter may vary.
Contact CKD for details.
*3: Air filter and oil mist filter are to be used where the inlet air temperature is 60°C or less, and X type where the inlet air temperature is 30°C or less.
If air temperature from the secondary side of the refrigeration air dryer is high, keep enough distance from the refrigeration air dryer to maintain a temperature no greater than the inlet air temperature.
*4: This system cannot be used for high pressure specifications (1 to 1.6 MPa). Consult with CKD for details.
*5: Use anti-rust processed materials for piping (zinc plated pipe, lining pipe or stainless steel pipe).
*6: If a processing air rates larger than the refrigeration air dryer supplies though may be used instantaneously, install a tank to the secondary side of the refrigeration air dryer. Installing a tank supplies stable moisture removed air.
*7: The air filter at the secondary side of the refrigeration air dryer can be used as a pre-filter before an oil mist filter.
*8: Depending on working conditions, condensation may form on the inside of the refrigeration air dryer and drip to the floor. To prevent water drops from flowing out, install a drain-pan, etc., before installing the dryer.
*9: Consult with CKD for energy-saving systems.
*10: Install a filter immediately before the equipment to be used to remove contaminants existing in the piping.

Large main line filter
AF3000 (regular)

■ Refining and pressure adjusting components/main line unit/main line filter

Overview

Simple system configuration is realized thanks to a unified design of filter vessels to achieve an easy layout design.

Features

(1) Incorporated element saving
Low pressure loss element is used to contribute to energy saving. Pressure loss is reduced by approx. 1/2 of conventional products.

(2) Differential pressure gauge provided as standard
The differential pressure gauge equipped as standard enables easy service life management for the element.

(3) Stand provided as standard
Easy pipe design and plumbing.

(4) Easy maintenance
Easy replacement of element by removing top of flange and rotating.

(5) Wide variation
max. 16 to 256 m^3/min. Wide application with 4 types and 40 models.



CONTENTS

Product introduction	1868
● Medium pre-filter (AF3000P)	1870
● Oil removing filter (AF3000S)	1872
● High-performance oil removing filter (AF3000M)	1874
● Activated carbon filter (AF3000X)	1876
Large main line filter device recommended system configuration	1864
⚠ Safety precautions	1878

Main line filter Energy saving and long life

40 models in 4 series are available to cover all applications from 16 to 256 m^3/min (ANR).

P-Type
Main line filter

(Pre-filter)

For air dryer pre-filter

- Contaminants 3 µm and over are removed
- Water separation efficiency 95%

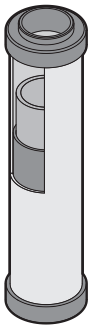

CKD's proprietary chemical fiber structure permanent element has been adopted for the 3 µm element. This structure reduces clogging and realizes long service life and low pressure loss.

S-Type
Oil mist filter

(Oil removing filter)

Protect expensive pneumatic components

- Contaminants 0.3 µm and over are removed
- Oil content up to a concentration of 0.5 mg/m^3 (at 21°C) is removed from the oil content on the secondary side

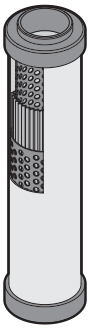

Polysilicate micro fibers quickly separate oil and limit pressure loss. The pleated structure creates a large filtration area, increasing the capacity for catching impurities. Prevents increased pressure loss.

M-Type
Oil mist filter

(High-performance oil removing filter)

For pneumatic circuits which prohibit passage of oil

- Contaminants 0.01 µm and over are removed
- Oil content up to a concentration of 0.01 mg/m^3 (at 21°C) is removed from the oil content on the secondary side

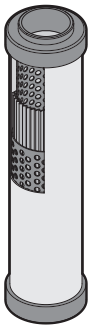

X-Type
Oil mist filter

(Activated carbon filter)

For pneumatic circuits which prohibit passage of odors

- Suction by activated carbon
- Vaporized oil content up to a concentration of 0.003 mg/m^3 (at 21°C) and odors are removed from the oil content on the secondary side

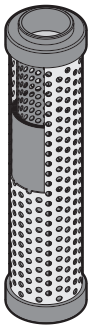

Cylindrically wound particle activated carbon adsorbs oil vapor molecules and odor molecules with low pressure loss. High density activated carbon extends element service life.

■ Long life/low pressure loss element

Element service life curve

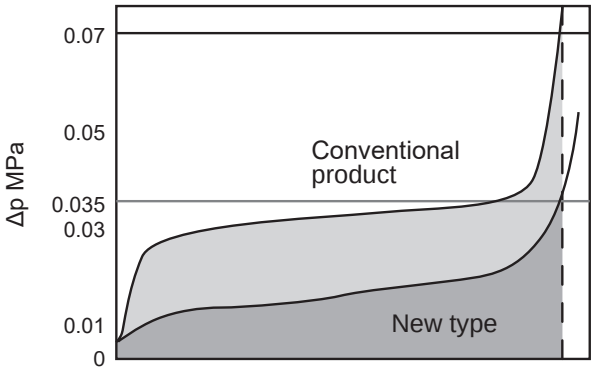

Element replacement
One year in normal usage state

- The pressure loss is half that of conventional products.
- The element is replaced when the pressure drops to 0.035 MPa.
- The element service life is one year when used under normal conditions.

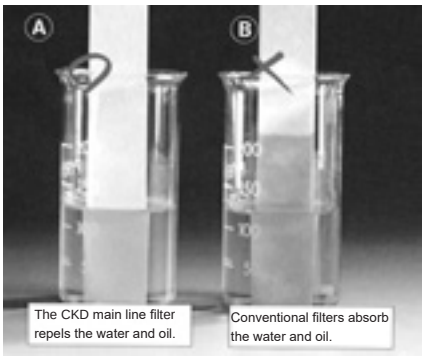

Ⓐ New filter

Borosilicate glass microfibers used in the filtration layer powerfully repel water and oil, allowing the pressure drop and operation costs to be minimized.

Ⓑ Conventional filter

Conventional glass microfibers absorb water and oil, so the pressure easily drops, filtration performance decreases, and operation costs increase.

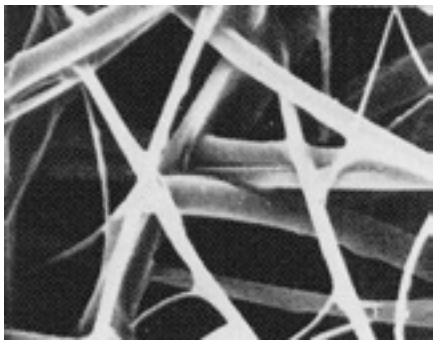

High 96% porosity inside the element fibers helps achieve low pressure loss and a long life

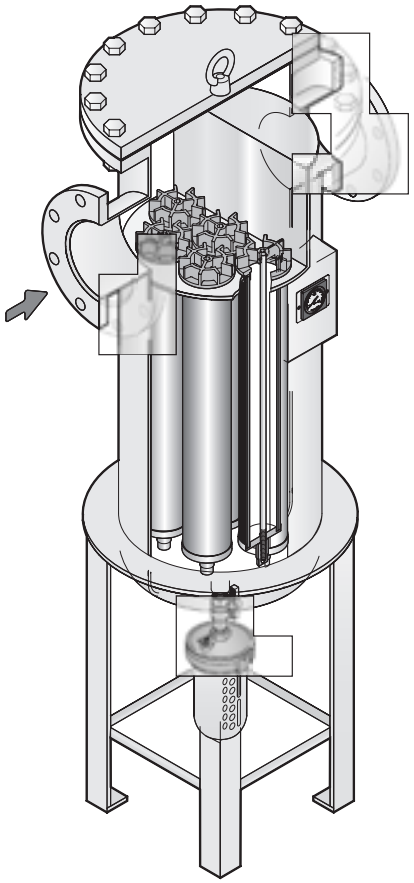

1. Lower operation costs.

CKD's original chemical fiber structure permanent element has been adopted for the 3 μm element. This structure does not clog easily, allowing less frequent element replacement. (P Series)

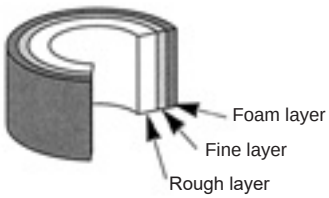

Permanent element

2. Contributes to energy saving.

The pressure loss has been reduced thanks to the permanent element. (P Series)

3. Easily replaceable element.

A screw method is adopted for element installation, so the element can now be replaced easily. Stainless steel is used for the screws, with no concerns for stiffness due to rust.



4. Easy daily inspection.

A differential pressure gauge is mounted on the front surface.
Improves visibility during daily inspection.
This differential pressure gauge is used as a reference for the element replacement interval.



5. Easy design of equipment.

The dimensions and bore sizes are the same within the same series, so if the flow rate is the same, the system is easily designed and installed.

6. Easy installation.

Installation legs have been prepared as standard. This eliminates the need for extra equipment for installation.
(Excluding AF3016)
The legs can be removed when not required.

7. Wide variation.

40 models in four series are available.
The ideal model can be selected based on the flow rate and quality of air.

AF3 016 P - 50
(A) (B) (C)

(A) Flow rate classification	
016	16 m³/min(ANR)
032	32 m³/min(ANR)
048	48 m³/min(ANR)
064	64 m³/min(ANR)
080	80 m³/min(ANR)
096	96 m³/min(ANR)
128	128 m³/min(ANR)
160	160 m³/min(ANR)
192	192 m³/min(ANR)
256	256 m³/min(ANR)

(B) Element	
P	P Series
S	S Series
M	M Series
X	X Series

(C) Bore size	
50	Flange 2B
80	Flange 3B
100	Flange 4B
150	Flange 6B
200	Flange 8B

Always read the safety precautions on pages 1878 to 1879 before use.



Main line filter

AF3000P Series

Appropriate for large pre-filter.

● Processing air flow rate: 16 to 256 m³/min (ANR)

JIS symbol



CAD

Specifications

Descriptions	AF3016 P-50	AF3032 P-80	AF3048 P-100	AF3064 P-100	AF3080 P-150	AF3096 P-150	AF3128 P-150	AF3160 P-200	AF3192 P-200	AF3256 P-200
Processing air flow ratem³/min (ANR)	16	32	48	64	80	96	128	160	192	256
Working fluid	Compressed air									
Working pressure MPa	0.07 to 1.0									
Proof pressure MPa	1.5									
Ambient temperature °C	5 to 60									
Degree of filtration μm	3									
Pressure drop Initial MPa	Within 0.005									
Pressure drop Normal MPa	0.005 to 0.02									
Pressure drop Element replacement MPa	0.07									
Element quantity	1	2	3	4	5	6	8	10	12	16
Port size (Note1) Flange	2 B	3 B	4 B	4 B	6 B	6 B	6 B	8 B	8 B	8 B
Weight kg	45	95	98	130	160	190	250	260	300	350
Differential pressure gauge	Standard (model No.: GA5102)									
Drain discharger	Standard (model No.: 5100-4C)									

*1: Flange is 10K flange.
*2: Processing air flow rate is the atmospheric pressure conversion value where the inlet pressure is 0.7MPa and initial pressure drop is 0.005MPa.
*3: ANR indicates conditions of 20°C atmospheric pressure and relative humidity 65%.

How to order

AF3 | 016 | P | - | 50 | - | ○

Ⓐ Flow rate classification

Code	Item
Ⓐ Flow rate classification	
016	16m³/min (ANR)
032	32m³/min (ANR)
048	48m³/min (ANR)
064	64m³/min (ANR)
080	80m³/min (ANR)
096	96m³/min (ANR)
128	128m³/min (ANR)
160	160m³/min (ANR)
192	192m³/min (ANR)
256	256m³/min (ANR)

Ⓑ Bore size

Ⓑ Bore size
Refer to the bore size/flow rate classification table on the left.

Ⓒ Option *3

Ⓒ Option	
Blank	None
H	English language specifications
K	Companion flange included
L	Foundation bolt/nut included (*2)
L1	Stainless steel foundation bolt/nut included (*2)
O	Outdoors
X1	IN/OUT reverse direction (*1)
Y2	Product photo

Bore size/flow rate classification table

Ⓑ Bore size

Flow rate classification		016	032	048	064	080	096	128	160	192	256
50	Flange 2 B	●									
80	Flange 3 B		●								
100	Flange 4 B			●	●						
150	Flange 6 B					●	●	●			
200	Flange 8 B								●	●	●

Precautions for model No. selection

*1: Viewed from the front, standard products have an air inlet on the left port and an air outlet on the right port. For "X1", air inlet is provided on the right port, while air outlet is provided on the left port.
*2: Available for AF3032P to AF3256P.
*3: When ordering several options, indicate the required options in alphabetical order.

Flow characteristics

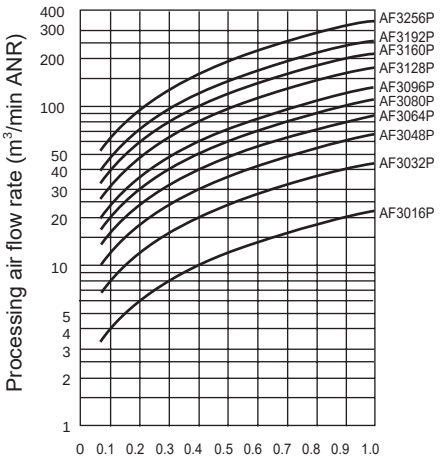

Note on selection

1. Never use model numbers found to be below the point of intersection of the selection conditions.
2. When the point of intersection found according to selecting conditions and flow characteristics curve are on the same line,the life time could be shortened.,Select a model that is one level higher.
3. Unit performance may not be attained if used at less than the selected pressure. Always select the model No. for the working pressure.

Internal structure and parts list

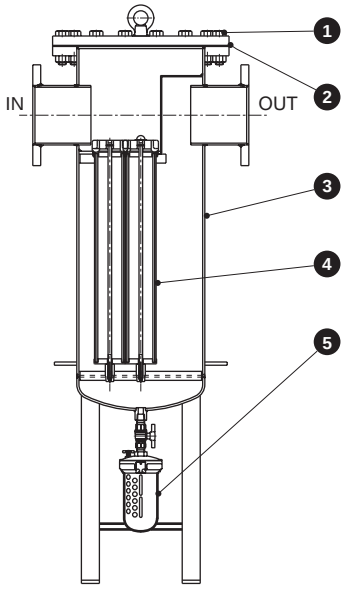

Parts list * Repair parts

No.	Part name	Material
1	Upper flange	SS400
2	* Gasket	NBR
3	Body	SS400
4	* Element kit	PP, NBR, etc.
5	* Drain discharger	ZDC, PC, etc.

The drain discharger and stop valve are attached.

Repair parts model No.

Flow rates m^3/min(ANR)	② Gasket	④ Element kit	⑤ Drain discharger
16	AF3016P-GASKET	AF3016P-ELEMENT-KIT(1)	5100-4C
32	AF3032P-GASKET	AF3032P-ELEMENT-KIT(2)	
48	AF3048P-GASKET	AF3048P-ELEMENT-KIT(3)	
64	AF3064P-GASKET	AF3064P-ELEMENT-KIT(4)	
80	AF3080P-GASKET	AF3080P-ELEMENT-KIT(5)	
96	AF3096P-GASKET	AF3096P-ELEMENT-KIT(6)	
128	AF3128P-GASKET	AF3128P-ELEMENT-KIT(8)	
160	AF3160P-GASKET	AF3160P-ELEMENT-KIT(10)	
192	AF3192P-GASKET	AF3192P-ELEMENT-KIT(12)	
256	AF3256P-GASKET	AF3256P-ELEMENT-KIT(16)	

Element quantity is indicated in ( ).

Dimensions CAD

● AF3016P

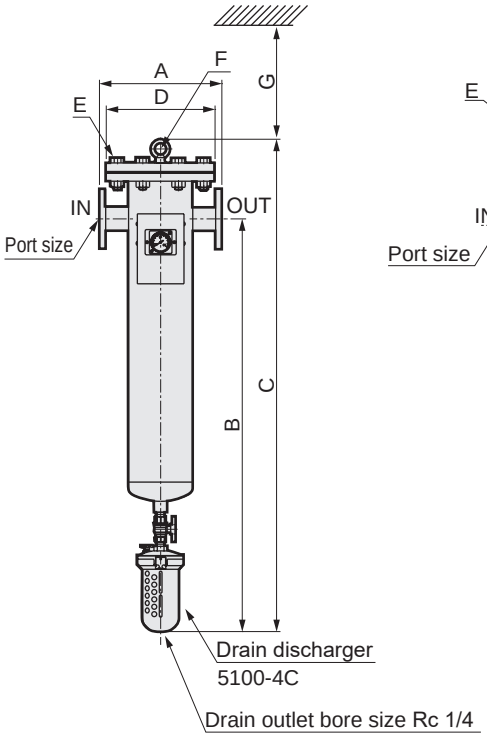

● AF3032P to 3256P

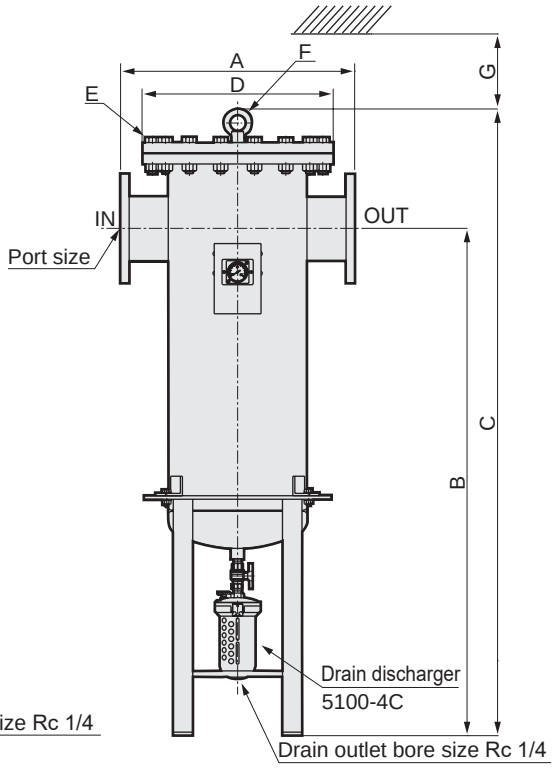

● Installation legs foundation bolt hole dimension

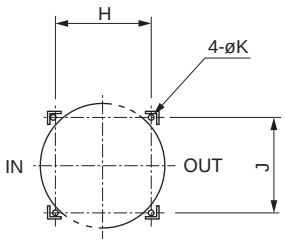

Model No.	Port size	A	B	C	D	E	F	G
AF3016P-50	Flange 2B	315	1045	1250	280	8-M20×70	M12	600
AF3032P-80	Flange 3B	500	1255	1495	400	12-M22×80	M12	600
AF3048P-100	Flange 4B	500	1255	1495	400	12-M22×80	M12	600
AF3064P-100	Flange 4B	550	1270	1522	445	16-M22×80	M16	600
AF3080P-150	Flange 6B	600	1300	1606	490	16-M22×80	M20	600
AF3096P-150	Flange 6B	650	1320	1630	560	16-M24×90	M20	600
AF3128P-150	Flange 6B	700	1350	1693	620	20-M24×90	M20	600
AF3160P-200	Flange 8B	700	1350	1693	620	20-M24×90	M20	600
AF3192P-200	Flange 8B	750	1360	1709	675	20-M24×100	M20	600
AF3256P-200	Flange 8B	850	1400	1786	745	20-M30×110	M24	600

Model No.	H	J	K
AF3032P-80	210	210	ø15
AF3048P-100	210	210	ø15
AF3064P-100	250	250	ø15
AF3080P-150	280	280	ø15
AF3096P-150	320	320	ø15
AF3128P-150	350	350	ø15
AF3160P-200	350	350	ø15
AF3192P-200	400	400	ø15
AF3256P-200	450	450	ø15



Micro alescer

AF3000S Series

Protect expensive pneumatic components

● Flow rate range: 16 to 256 m^3/min (ANR)

JIS symbol

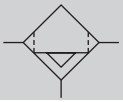

CAD

Specifications

Descriptions	AF3016 S-50	AF3032 S-80	AF3048 S-100	AF3064 S-100	AF3080 S-150	AF3096 S-150	AF3128 S-150	AF3160 S-200	AF3192 S-200	AF3256 S-200
Processing air flow ratem^3/min (ANR)	16	32	48	64	80	96	128	160	192	256
Working fluid	Compressed air									
Working pressure MPa	0.07 to 1.0									
Proof pressure MPa	1.5									
Ambient temperature °C	5 to 60									
Degree of filtration µm	0.3									
Secondary oil content mg/m^3	1.0 (inlet air 30°C)									
Pressure drop Initial MPa	Within 0.01									
Pressure drop Normal MPa	0.01 to 0.03									
Pressure drop Element replacement MPa	0.07									
Element quantity	1	2	3	4	5	6	8	10	12	16
Port size (*1) Flange	2B	3B	4B	4B	6B	6B	6B	8B	8B	8B
Weight kg	45	95	98	130	160	190	250	260	300	350
Differential pressure gauge	Standard (model No.: GA5102)									
Drain discharger	Standard (model No.: 5100-4C)									

*1: Flange is 10K flange.
*2: Processing air flow rate is the atmospheric pressure conversion value where the inlet pressure is 0.7 MPa and initial pressure drop is 0.01 MPa.
*3: ANR indicates conditions of 20°C atmospheric pressure and relative humidity 65%.

How to order

AF3 | 016 | S | - | 50 | - | ○

Ⓐ Flow rate classification

Ⓑ Bore size

Ⓒ Option

Code	Item
Ⓐ Flow rate classification	
016	16m^3/min (ANR)
032	32m^3/min (ANR)
048	48m^3/min (ANR)
064	64m^3/min (ANR)
080	80m^3/min (ANR)
096	96m^3/min (ANR)
128	128m^3/min (ANR)
160	160m^3/min (ANR)
192	192m^3/min(ANR)
256	256m^3/min (ANR)
Ⓑ Bore size	
Refer to the bore size/flow rate classification table on the left.	
Ⓒ Option	
Blank	No
H	English language specifications
K	Companion flange included
L	Foundation bolt/nut included(*2)
L1	Stainless steel foundation bolt/nut included(*2)
O	Outdoors
X1	IN/OUT reverse direction (*1)
Y2	Product photo

Bore size/flow rate classification table

Ⓑ Bore size											
Flow rate classification		016	032	048	064	080	096	128	160	192	256
50	Flange 2B	●									
80	Flange 3B		●								
100	Flange 4B			●	●						
150	Flange 6B					●	●	●			
200	Flange 8B								●	●	●

Precautions for model No. selection

*1: Viewed from the front, standard products have an air inlet on the left port while an air outlet on the right port. For "X1", air inlet is provided on the right port, while air outlet is provided on the left port.
*2: Available for AF3032S to AF3256S.

Flow characteristics

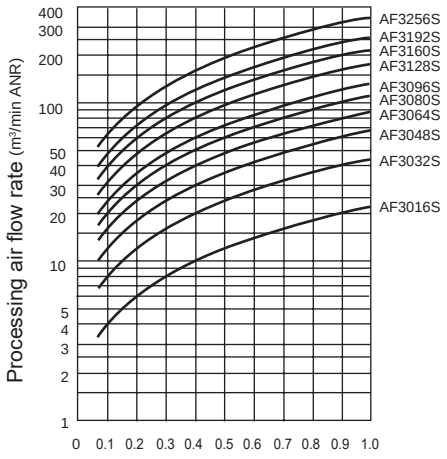

Note on selection

1. Never use model numbers found to be below the point of intersection of the selection conditions.
2. When the point of intersection found according to selecting conditions and flow characteristics curves are on the same line, the service life may be shortened, so select a model that is one size larger.
3. The oil removing ratio drops if the inlet air temperature is 30°C or more. Maintain the inlet air temperature at 30°C or less.
4. Unit performance may not be attained if used at less than the selected pressure. Always select the model No. for the working pressure.

Internal structure and parts list

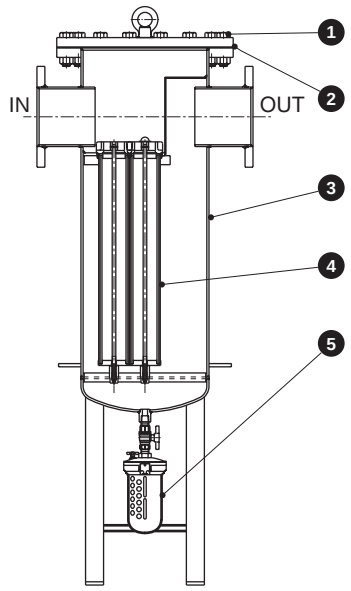

Parts list * Repair parts

No.	Part name	Material
1	Upper flange	SS400
2	* Gasket	NBR
3	Body	SS400
4	* Element kit	Filter paper, NBR, etc.
5	* Drain discharger	ZDC, PC, etc.

The drain discharger and stop valve are attached.

Repair parts model No.

Flow rate class m³/min(ANR)	Gasket	Element kit	Drain discharger
16	AF3016P-GASKET	AF3016S-ELEMENT-KIT(1)	5100-4C
32	AF3032P-GASKET	AF3032S-ELEMENT-KIT(2)	
48	AF3048P-GASKET	AF3048S-ELEMENT-KIT(3)	
64	AF3064P-GASKET	AF3064S-ELEMENT-KIT(4)	
80	AF3080P-GASKET	AF3080S-ELEMENT-KIT(5)	
96	AF3096P-GASKET	AF3096S-ELEMENT-KIT(6)	
128	AF3128P-GASKET	AF3128S-ELEMENT-KIT(8)	
160	AF3160P-GASKET	AF3160S-ELEMENT-KIT(10)	
192	AF3192P-GASKET	AF3192S-ELEMENT-KIT(12)	
256	AF3256P-GASKET	AF3256S-ELEMENT-KIT(16)	

Element quantity is indicated in ( ).

Dimensions CAD

● AF3016S

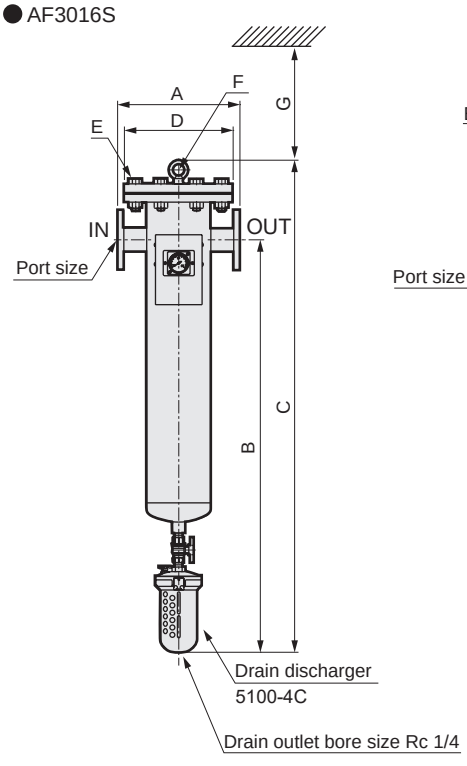

● AF3032S to 3256S

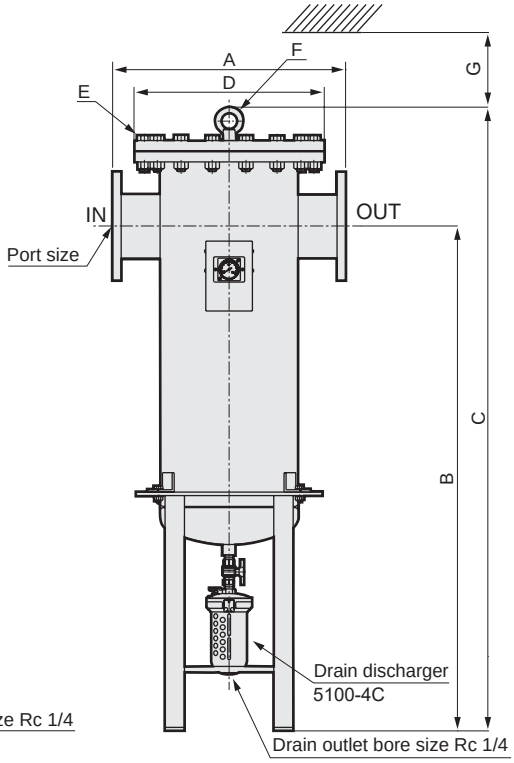

● Installation legs foundation bolt hole dimension

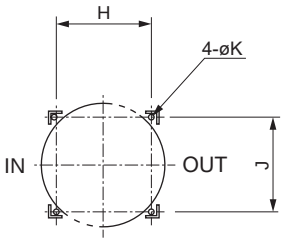

Model No.	Port size	A	B	C	D	E	F	G
AF3016S-50	Flange 2B	315	1045	1250	280	8-M20x70	M12	600
AF3032S-80	Flange 3B	500	1255	1495	400	12-M22x80	M12	600
AF3048S-100	Flange 4B	500	1255	1495	400	12-M22x80	M12	600
AF3064S-100	Flange 4B	550	1270	1522	445	16-M22x80	M16	600
AF3080S-150	Flange 6B	600	1300	1606	490	16-M22x80	M20	600
AF3096S-150	Flange 6B	650	1320	1630	560	16-M24x90	M20	600
AF3128S-150	Flange 6B	700	1350	1693	620	20-M24x90	M20	600
AF3160S-200	Flange 8B	700	1350	1693	620	20-M24x90	M20	600
AF3192S-200	Flange 8B	750	1360	1709	675	20-M24x100	M20	600
AF3256S-200	Flange 8B	850	1400	1786	745	20-M30x110	M24	600

Model No.	H	J	K
AF3032S-80	210	210	ø15
AF3048S-100	210	210	ø15
AF3064S-100	250	250	ø15
AF3080S-150	280	280	ø15
AF3096S-150	320	320	ø15
AF3128S-150	350	350	ø15
AF3160S-200	350	350	ø15
AF3192S-200	400	400	ø15
AF3256S-200	450	450	ø15



Micro alescer

AF3000M Series

For pneumatic pressure circuits which are susceptible to oil

● Flow rate range: 16 to 256 m³/min (ANR)

JIS symbol 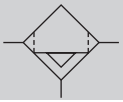

CAD

Specifications

Descriptions	AF3016 M-50	AF3032 M-80	AF3048 M-100	AF3064 M-100	AF3080 M-150	AF3096 M-150	AF3128 M-150	AF3160 M-200	AF3192 M-200	AF3256 M-200
Processing air flow ratem³/min(ANR)	16	32	48	64	80	96	128	160	192	256
Working fluid	Compressed air									
Working pressure MPa	0.07 to 1.0									
Proof pressure MPa	1.5									
Ambient temperature °C	5 to 60									
Degree of filtration μm	0.01									
Secondary oil content mg/m³	0.1 (inlet air 30°C)									
Pressure drop Initial MPa	Within 0.01									
Pressure drop Normal MPa	0.02 to 0.04									
Pressure drop Element replacementMPa	0.07									
Element quantity	1	2	3	4	5	6	8	10	12	16
Port size (*1) Flange	2B	3B	4B	4B	6B	6B	6B	8B	8B	8B
Weight kg	45	95	98	130	160	190	250	260	300	350
Differential pressure gauge	Standard (model No.: GA5102)									
Drain discharger	Standard (model No.: 5100-4C)									

*1: Flange is 10K flange.
*2: Processing air flow rate is the atmospheric pressure conversion value where the inlet pressure is 0.7 MPa and initial pressure drop is 0.01 MPa.
*3: ANR indicates conditions of 20°C atmospheric pressure and relative humidity 65%.

How to order

AF3 | 016 | M | - | 50 | - | ○

Ⓐ Flow rate classification

Code	Item
Ⓐ Flow rate classification	
016	16m³/min (ANR)
032	32m³/min (ANR)
048	48m³/min (ANR)
064	64m³/min (ANR)
080	80m³/min (ANR)
096	96m³/min (ANR)
128	128m³/min (ANR)
160	160m³/min (ANR)
192	192m³/min(ANR)
256	256m³/min (ANR)

Ⓑ Bore size

Ⓑ Bore size
Refer to the bore size/flow rate classification table on the left.

Ⓒ Option *3

Ⓒ Option	
Blank	No
H	English language specifications
K	Companion flange included
L	Foundation bolt/nut included (*2)
L1	Stainless steel foundation bolt/nut included (*2)
O	Outdoors
X1	IN/OUT reverse direction (*1)
Y2	Product photo

Bore size/flow rate classification table

Ⓑ Bore size											
Flow rate classification		016	032	048	064	080	096	128	160	192	256
50	Flange 25	●									
80	Flange 38		●								
100	Flange 45			●	●						
150	Flange 68					●	●	●			
200	Flange 88								●	●	●

Precautions for model No. selection

*1: Viewed from the front, standard products have an air inlet on the left port and an air outlet on the right port. For "X1", air inlet is provided on the right port, while air outlet is provided on the left port.
*2: Available for AF3032M to AF3256M.
*3: When ordering several options, indicate the required options in alphabetical order.

Flow characteristics

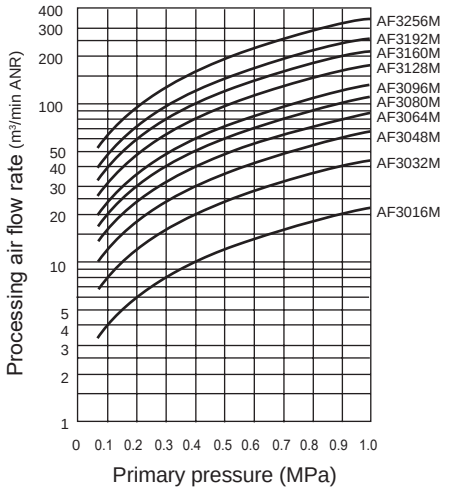

Note on selection

1. Never use model numbers found to be below the point of intersection of the selection conditions.
2. When the point of intersection found according to selecting conditions and flow characteristics curves are on the same line, the service life may be shortened, so select a model that is one size larger.
3. The oil removing ratio drops if the inlet air temperature is 30°C or more. Maintain the inlet air temperature at 30°C or less.
4. Unit performance may not be attained if used at less than the selected pressure. Always select the model No. for the working pressure.

Internal structure and parts list

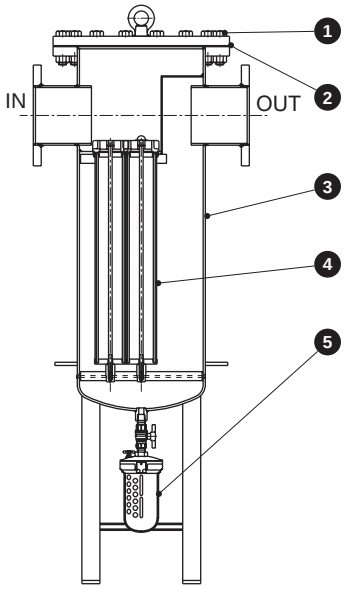

Parts list * Repair parts

No.	Part name	Material
1	Upper flange	SS400
2	* Gasket	NBR
3	Body	SS400
4	* Element kit	Filter paper, NBR, etc.
5	* Drain discharger	ZDC, PC, etc.

The drain discharger and stop valve are attached.

Repair parts model No.

Flow rates m³/min (ANR)	❷ Gasket	❹ Element kit	❺ Drain discharger
16	AF3016P-GASKET	AF3016M-ELEMENT-KIT(1)	5100-4C
32	AF3032P-GASKET	AF3032M-ELEMENT-KIT(2)	
48	AF3048P-GASKET	AF3048M-ELEMENT-KIT(3)	
64	AF3064P-GASKET	AF3064M-ELEMENT-KIT(4)	
80	AF3080P-GASKET	AF3080M-ELEMENT-KIT(5)	
96	AF3096P-GASKET	AF3096M-ELEMENT-KIT(6)	
128	AF3128P-GASKET	AF3128M-ELEMENT-KIT(8)	
160	AF3160P-GASKET	AF3160M-ELEMENT-KIT(10)	
192	AF3192P-GASKET	AF3192M-ELEMENT-KIT(12)	
256	AF3256P-GASKET	AF3256M-ELEMENT-KIT(16)	

Element quantity is indicated in ( ).

Dimensions CAD

● AF3016M

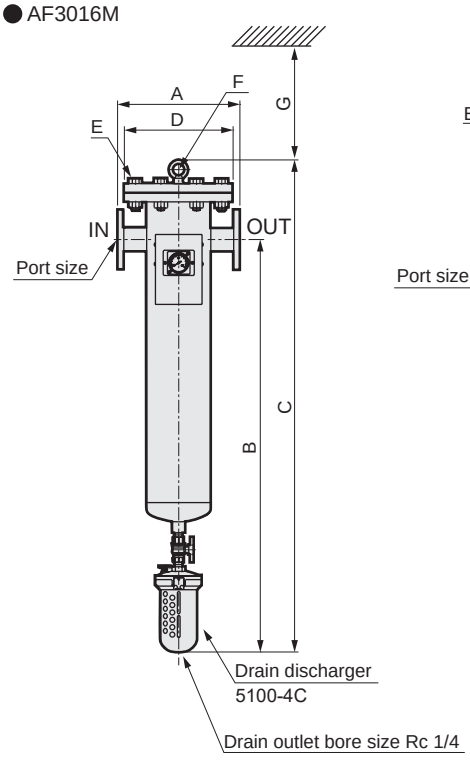

● AF3032M to 3256M

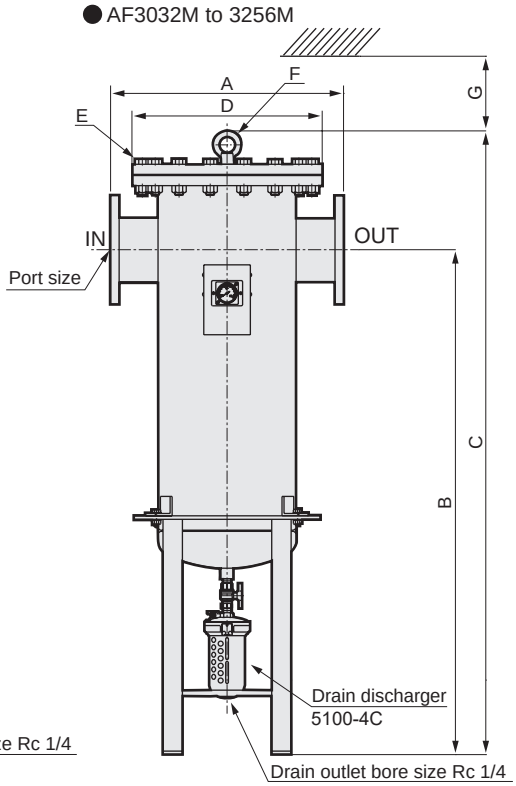

● Installation legs foundation bolt hole dimension

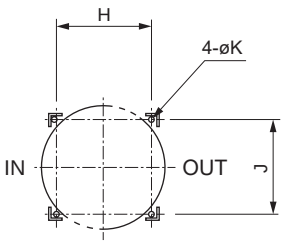

Model No.	Port size	A	B	C	D	E	F	G
AF3016M-50	Flange 2B	315	1045	1250	280	8-M20x70	M12	600
AF3032M-80	Flange 3B	500	1255	1495	400	12-M22x80	M12	600
AF3048M-100	Flange 4B	500	1255	1495	400	12-M22x80	M12	600
AF3064M-100	Flange 4B	550	1270	1522	445	16-M22x80	M16	600
AF3080M-150	Flange 6B	600	1300	1606	490	16-M22x80	M20	600
AF3096M-150	Flange 6B	650	1320	1630	560	16-M24x90	M20	600
AF3128M-150	Flange 6B	700	1350	1693	620	20-M24x90	M20	600
AF3160M-200	Flange 8B	700	1350	1693	620	20-M24x90	M20	600
AF3192M-200	Flange 8B	750	1360	1709	675	20-M24x100	M20	600
AF3256M-200	Flange 8B	850	1400	1786	745	20-M30x110	M24	600

Model No.	H	J	K
AF3032M-80	210	210	ø15
AF3048M-100	210	210	ø15
AF3064M-100	250	250	ø15
AF3080M-150	280	280	ø15
AF3096M-150	320	320	ø15
AF3128M-150	350	350	ø15
AF3160M-200	350	350	ø15
AF3192M-200	400	400	ø15
AF3256M-200	450	450	ø15



Micro alescer

AF3000X Series

For pneumatic pressure circuits which are susceptible to odors

● Flow rate range: 16 to 256 m³/min (ANR)

JIS symbol 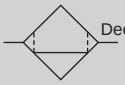 Deodorization

CAD

Specifications

Descriptions	AF3016 X-50	AF3032 X-80	AF3048 X-100	AF3064 X-100	AF3080 X-150	AF3096 X-150	AF3128 X-150	AF3160 X-200	AF3192 X-200	AF3256 X-200
Processing air flow ratem³/min(ANR)	16	32	48	64	80	96	128	160	192	256
Working fluid	Compressed air									
Working pressure MPa	0.07 to 1.0									
Proof pressure MPa	1.5									
Ambient temperature °C	5 to 30									
Filtration method	Suction by activated carbon									
Secondary oil content mg/m³	0.03 (inlet air 30°C)									
Pressure drop MPa	Within 0.01									
Element quantity	1	2	3	4	5	6	8	10	12	16
Port size (*1) Flange	2B	3B	4B	4B	6B	6B	6B	8B	8B	8B
Weight kg	45	95	98	130	160	190	250	260	300	350
Differential pressure gauge	Standard (model No.: GA5102)									
Drain discharger	No									

*1: Flange is 10K flange.
*2: Processing air flow rate is the atmospheric pressure conversion value where the inlet pressure is 0.7 MPa and initial pressure drop is 0.01 MPa.
*3: ANR indicates conditions of 20°C atmospheric pressure and relative humidity 65%.

How to order

AF3 | 016 | X | - | 50 | - | ○

Ⓐ Flow rate classification

Ⓑ Bore size

Ⓒ Option

Code	Item
Ⓐ Flow rate classification	
016	16m³/min (ANR)
032	32m³/min (ANR)
048	48m³/min (ANR)
064	64m³/min (ANR)
080	80m³/min (ANR)
096	96m³/min (ANR)
128	128m³/min (ANR)
160	160m³/min (ANR)
192	192m³/min(ANR)
256	256m³/min (ANR)
Ⓑ Bore size	
Refer to the bore size/flow rate classification table on the left.	
Ⓒ Option	
Blank	No
H	English language specifications
K	Companion flange included
L	Foundation bolt/nut included (*2)
L1	Stainless steel foundation bolt/nut included (*2)
O	Outdoors
X1	IN/OUT reverse direction (*1)
Y2	Product photo

Bore size/flow rate classification table

Ⓑ Bore size										
Flow rate classification		016	032	048	064	080	096	128	160	192	256
50	Flange 2B	●									
80	Flange 3B		●								
100	Flange 4B			●	●						
150	Flange 6B					●	●	●			
200	Flange 8B								●	●	●

Flow characteristics

Flow characteristics are the same as AF3000M on page 1874. Be sure to use the AF3000M as a pre-filter.

Precautions for model No. selection

*1: Viewed from the front, standard products have an air inlet on the left port and an air outlet on the right port. For "X1", air inlet is provided on the right port, while air outlet is provided on the left port.
*2: Available for AF3032X to AF3256X.
*3: Unit performance may not be attained if used at less than the selected pressure. Always select the model No. for the working pressure.

Internal structure and parts list

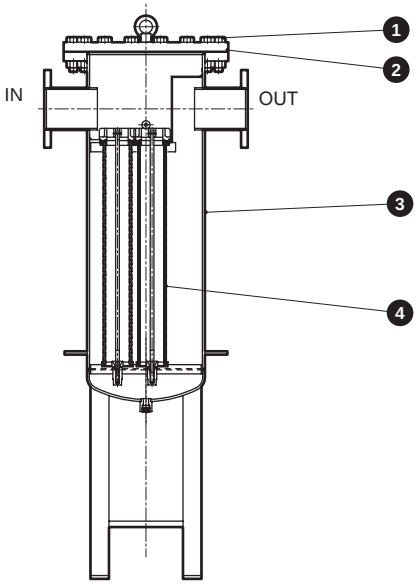

Parts list * Repair parts

No.	Part name	Material
1	Upper flange	SS400
2	* Gasket	NBR
3	Body	SS400
4	* Element kit	Activated carbon, NBR, etc.

Repair parts model No.

Flow rates m^3/min (ANR)	② Gasket	④ Element kit
16	AF3016P-GASKET	AF3016X-ELEMENT-KIT(1)
32	AF3032P-GASKET	AF3032X-ELEMENT-KIT(2)
48	AF3048P-GASKET	AF3048X-ELEMENT-KIT(3)
64	AF3064P-GASKET	AF3064X-ELEMENT-KIT(4)
80	AF3080P-GASKET	AF3080X-ELEMENT-KIT(5)
96	AF3096P-GASKET	AF3096X-ELEMENT-KIT(6)
128	AF3128P-GASKET	AF3128X-ELEMENT-KIT(8)
160	AF3160P-GASKET	AF3160X-ELEMENT-KIT(10)
192	AF3192P-GASKET	AF3192X-ELEMENT-KIT(12)
256	AF3256P-GASKET	AF3256X-ELEMENT-KIT(16)

Element quantity is indicated in ( ).

Dimensions

Dimensions are the same as the AF3000M on page 1875. However, the drain discharger and stop valve are not included.

Pneumatic components (Main line unit)

Safety Precautions

Be sure to read this section before use.
Refer to Intro Page 63 for general precautions.

Product-specific cautions: Large main line filter AF3000 series

Manufacturer's Exemption of Liability

⚠ WARNING

■ The manufacturer cannot be held liable in the following cases:
- In the case where there are serious errors in the operator's use.
- Inappropriate modifications or repairs using nonstandard parts, made by the user.

Design/selection

⚠ WARNING

■ Do not use for applications other than compressed air.

■ Do not use for caisson shields or medical devices such as breathing devices, or for direct air blow onto foodstuffs.
- There is a risk of personal injury.

■ Do not mount and use this device on transportation equipment such as vehicles or ships.
- The internal devices could be damaged by vibration, etc.

■ Avoid direct sunlight and rainwater.
The resin parts, etc., could deteriorate and break.

■ Do not use in locations with corrosive gases.

■ Use this product within the operating ambient temperature.

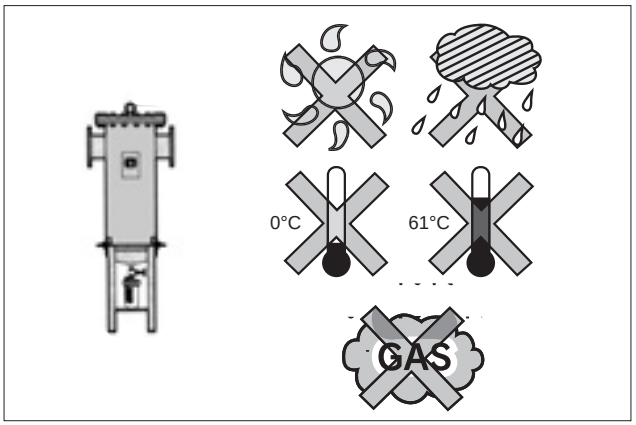

■ Do not use in locations at risk of freezing. The accumulated drainage could freeze and damage the product.

■ Do not use in hazardous locations (possibly explosive atmospheres, etc.).

■ We recommend keeping the inlet air temperature as low as possible. The oil removing rate will drop if the temperature is high.

■ Do not use this product in an ozone generating environment.

■ Avoid using this product where vibration and impact are present.

■ Do not use this product in areas containing dust, etc.

■ Do not use this product in an environment in which the compressed air contains the following types of gases.
- Sulfur dioxide, chlorine gas
- Aromatic hydrocarbon compounds
  (For example, benzene, toluene, phenol, cyclohexane, etc.)
- Chlorinated hydrocarbon compounds
  (For example, trichloroethylene, chloroform, etc.)
- Ketones (for example, acetone, etc.)
- Aldehydes
  (For example, formaldehyde or acetaldehyde, etc.)
- Amines (For example, ethylamine, methylamine, etc.)

■ Always set the air flow to within the working pressure range, and use treated air.
- Failure to observe this may prevent proper removal of water, dust and oil.

■ Install indoors.

■ The inside of the AF3000 Series is coated to prevent rust. However, when using this series for applications susceptible to rust, the stainless steel housing "AF5000 Series (page 1881)" is recommended.

Mounting, installation and adjustment

⚠ CAUTION

- "Class 2 pressure vessel" of the "Safety regulation of boiler and pressure vessel" of Occupational Safety Sanitation Act applies to model No. AF3032 to 3256.
- Model numbers AF3032 to 3256 have a Class 2 pressure vessel pressure proof certificate. This certificate must be kept safely while using this device. (Applications to the Labor Standards Supervision Office are not required in Japan.)
- This device may only be used in Japan. (Contact CKD regarding use overseas.)
- Install this device on a stable, flat surface not subject to vibration.
- Do not step onto this body.
- When piping, remove coolant and rust preventing agent, etc.
- Secure enough space for maintenance and inspection.

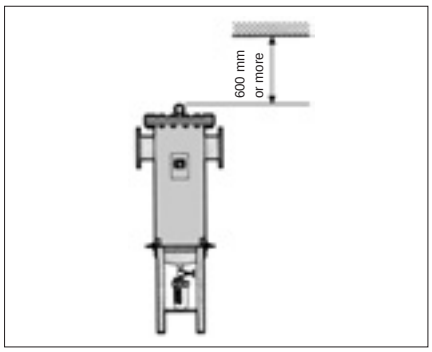

- The element and differential pressure gauge could be damaged if air flows through suddenly. When installing valves, etc., before and after this product, do not operate the valves suddenly.
  Do not install this filter in a system where a reverse flow could occur or where impact could be applied easily.
- Flush the drain piping with air blow before mounting to the main body to remove any foreign matter inside.
- Connect a tube pipe, etc., to the drain outlet.
- As drainage is discharged with pressure, securely fix the piping at the drain port so that drainage does not splatter.
- If the drain outlet piping slopes upward, the min. working pressure will increase by 0.01 MPa per 1 m. Please be careful.
  Make sure that the rising piping does not exceed 5 m.
- Mount the bowl vertically facing downward. Failure to do so could cause drainage discharge faults.
  Lay the drain pipe so that it is not pressurized. Laying several pipes together or attaching a check valve will create a pressurized state. Do not lay the pipes in this state.

Use/maintenance

⚠ CAUTION

- A differential pressure gauge is provided as standard to judge the element life.
- Do not use reverse airflow.
  Do not pressurize suddenly.
  The differential pressure gauge or element could be damaged.
- The air filter life is spent when the pressure drops to 0.07 MPa or after one year of use, whichever comes first.

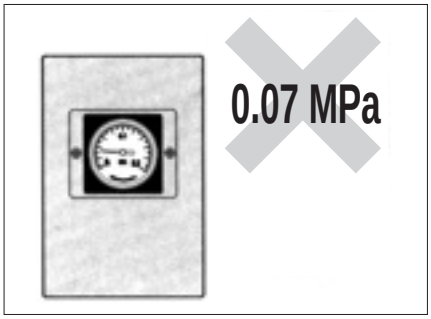

Change all elements when the service life is reached. (X Series cannot control service life due to the differential pressure. Therefore, replace the filter after 1,000 hours of use or when the deodorizing effect is lost.)

- When replacing the element, the retaining nut tightening torque shall be 18 N·m.
- Release the air in the bowl before inspecting the auto-drain for improper discharge, etc. Wash the drain unit with water, and then blow out all moisture with an air gun.
- Use a household neutral detergent to wash the bowl, and then rinse with water.

● Chemical resistance of drain discharger plastic bowl

Types of chemicals	Categories of chemicals	Main products of chemicals	General applications	Polycarbonate	Nylon
Inorganic compound	Acids	Hydrochloric acid, sulfuric acid, fluorine, phosphoric acid, chromic acid, etc.	Acid washing of metals, acidic degreasing solutions, coating treatment solutions	x	x
	Alkalines	Caustic soda, caustic potash, calcium hydroxide, aqueous ammonia, sodium carbonate, etc.	Alkaline degreasing solution for metals	x	○
	Inorganic salts	Sodium sulfide, potassium nitrate, potassium bichromate, sodium sulfate, etc.		x	○
Organic compound	Aromatic hydrocarbons	Benzene, toluene, xylene, ethyl benzene, styrene, etc.	Contained in paint thinner (benzene, toluene, and xylene)	x	x
	Chlorinated aliphatic hydrocarbons	Methyl chloride, ethylene chloride, methylene chloride, acetylene chloride, chloroform, trichlene, perchlene, carbon tetrachloride	Organic solvent-based washing solution for metals (trichlene, perchlene, carbon tetrachloride, etc.)	x	○
	Chlorinated aromatic hydrocarbons	Chlorobenzene, dichlorobenzene, benzene hexachloride (B/H/C), etc.	Agricultural chemicals	x	○
	Petroleum components	Solvent, naphtha, gasoline		x	○
	Alcohols	Methyl alcohol, ethyl alcohol, cyclohexanol, benzyl alcohol	Used as antifreezing agent	x	x
	Phenol	Carbolic acid, cresol, naphthol, etc.	Disinfectant solution	x	x
	Ethers	Methyl ether, methyl ethyl ether, ethyl ether	Additive of brake oil	x	○
	Ketones	Acetone, methyl ethyl ketone, cyclohexanone, acetophenone, etc.		x	x
	Carboxylic acids	Formic acid, acetic acid, butyl acid, acrylic acid, oxalic acid, phthalic acid, etc.	Dyes/oxalic acid for aluminum processing, phthalic acid for paint base	x	x
	Phosphate ester	Dimethyl phthalate (DMP), diethyl phthalate (DEP), dibutyl phthalate (DBP), dioctyl phthalate (DOP)	Lubricant, synthetic coolant, rust preventing agent additive plasticizer for synthetic resin	x	○
	Oxyacids	Glycol acid, lactic acid, malic acid, citric acid, tartaric acid		x	x
	Nitro compounds	Nitromethane, nitroethane, nitroethylene, nitrobenzene, etc.		x	○
	Amines	Methylamine, dimethylamine, ethylamine, aniline, acetanilide, etc.	Additive of brake oil	x	x
	Nitriles	Acetonitrile, acrylonitrile, benzonitrile, acetoisonitrile, etc.	Raw material for nitrile rubber	x	○

○: Available x: Not available

Large main line filter
AF5000 (oil-free)

■ Refining and pressure adjusting components/main line unit/main line filter

Overview

For oil-free compressor, a stainless steel vessel is used to eliminate concerns about rust, and to supply perfectly clean high quality air.

Features

(1) SUS vessel provided
For oil-free, SUS304 is used for all models.
(2) Incorporated energy saving element
(3) Unique drainage system
Forcible discharge method, while new auto-drain with air loss zero system is used.
(4) Remote control possible
Element replacement information is issued by differential pressure switch outputting alarm signal.
(5) Simple element replacement
Remove the top flange, and just turn the screw on the element.



CONTENTS

Product introduction	1882
● Medium pre-filter (AF5000P)	1884
● Oil removing filter (AF5000S)	1888
● High-performance oil removing filter (AF5000M)	1892
● Activated carbon filter (AF5000X)	1896
Large main line filter device recommended system configuration	1864
⚠ Safety precautions	1900

Providing total oil-free specifications from refrigeration air dryer to filter by incorporating a stainless steel vessel

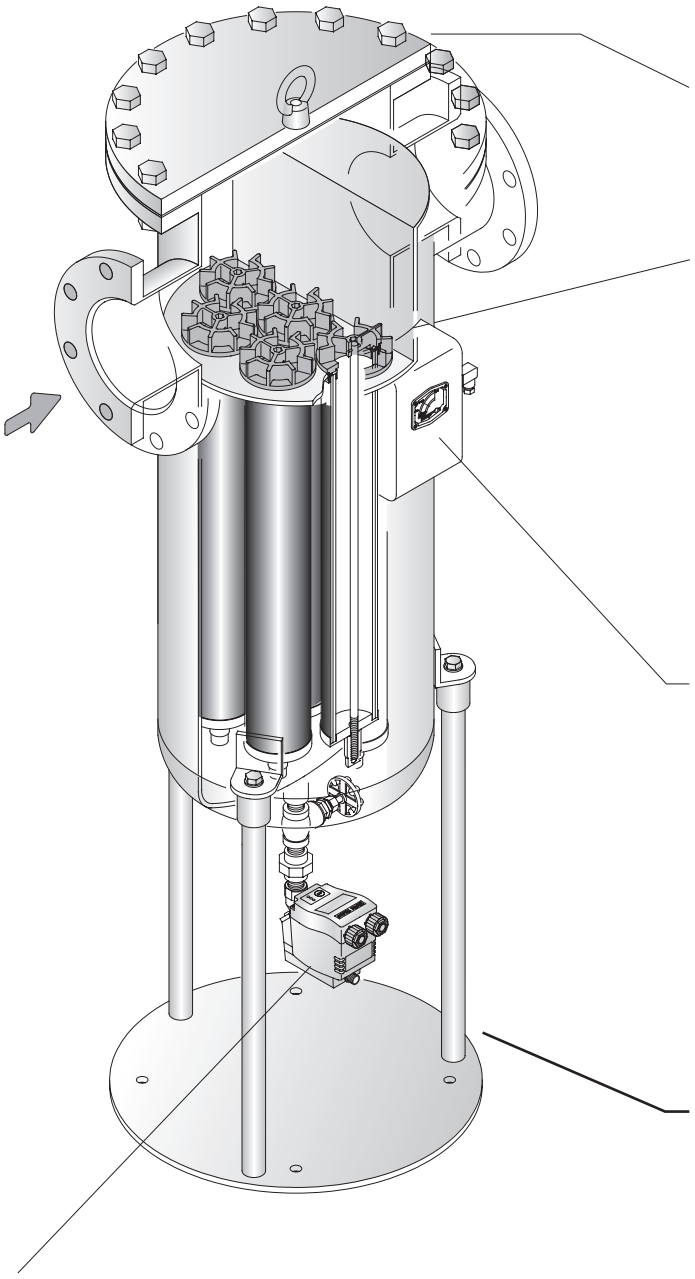

■ Stainless steel vessel incorporated for all models

(SUS304)Truly clean air is supplied without rust forming.
Lightweight (10 to 20% (CKD comparison))

■ Easily replace element

A screw method is used for element installation, so the element is replaced by removing the upper flange. Stainless steel is also used for the screws, with no concern for stiffness due to rust.



■ Remote control possible

An indicator with a differential pressure switch is standard, installed on the front. The element replacement interval is confirmed beforehand. An alarm signal is output from the differential pressure switch, providing an accurate reading and enabling remote control.

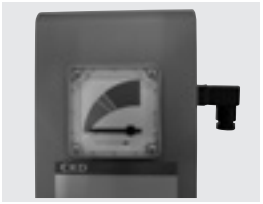

■ Easy installation

Installation legs have been prepared as standard.
Piping work is easier. (AF5016isexcluding.)
The legs are removed when not required.

■ Drain discharger with no air loss sensor prevents wasted air consumption (Provided as standard on P and S types)

The highly reliable drain lower end sensor and solenoid valve have been integrated in this new energy-saving drain discharger. While air is discharged with the drainage when using the float or disc drain discharger, this product detects lower water levels during drainage discharge, so air is not wasted and discharged when discharging the drainage. An alarm signal is output, enabling remote control. (Power supply 95 VAC to 240 VAC is required)

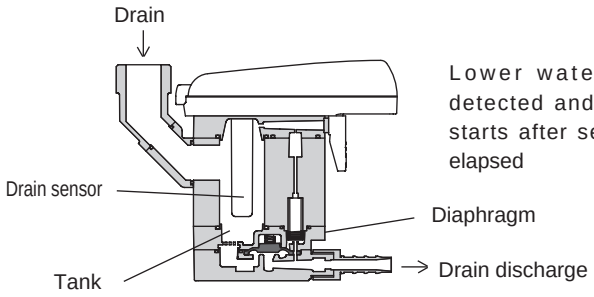

Lower water level is detected and discharge starts after set time has elapsed

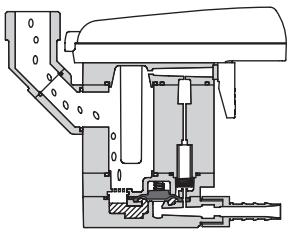

Lower water level is detected again and drainage stops

Wide variation

40 models in four types are available.
The ideal model can be selected based on the flow rate and quality of air.

AF5016P-50

Flow rate classification		Element		Bore size	
016	16 m³/min(ANR)	P	P type	50	Flange 2B
032	32 m³/min(ANR)	S	S type	80	Flange 3B
048	48 m³/min(ANR)	M	M type	100	Flange 4B
064	64 m³/min(ANR)	X	X type	150	Flange 6B
080	80 m³/min(ANR)			200	Flange 8B
096	96 m³/min(ANR)				
128	128 m³/min(ANR)				
160	160 m³/min(ANR)				
192	192 m³/min(ANR)				
256	256 m³/min(ANR)				

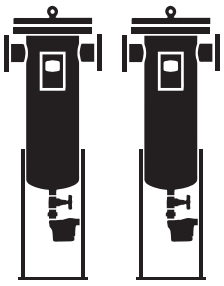

Easy design of equipment

The dimensions and bore sizes are the same for each series with the same flow rate, so the system is easily designed and installed.
Types can be changed only by replacing the element.

P Type
Main line filter

(Pre-filter)

For air dryer pre-filter

- Contaminants 3 µm and over are removed
- Water separation efficiency 95%

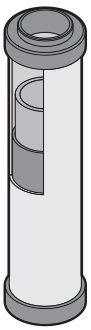

CKD's original chemical fiber structure permanent element has been adopted for the 3 µm element. This structure reduces clogging and realizes long service life and low pressure loss.

S Type
Oil mist filter

(Oil removing filter)

Protect expensive pneumatic components

- Contaminants 0.3 µm and over are removed
- Oil content up to a concentration of 0.5 mg/m³ (at 21°C) is removed from the oil content on the secondary side

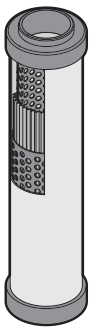

Polysilicate micro fibers quickly separate oil and limit pressure loss. The pleated structure creates a large filtration area, increasing the capacity for catching impurities. Prevents increased pressure loss.

M Type
Oil mist filter

(High-performance oil removing filter)

For pneumatic pressure circuits which are susceptible to oil

- Contaminants 0.01 µm and over are removed
- Oil content up to a concentration of 0.01 mg/m³ (at 21°C) is removed from the oil content on the secondary side

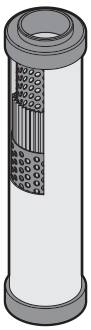

X Type
Oil mist filter

(Activated carbon filter)

For pneumatic pressure circuits which are susceptible to odors

- Suction by activated carbon
- Vaporized oil content up to a concentration of 0.003 mg/m³ (at 21°C) and odors are removed from the oil content on the secondary side

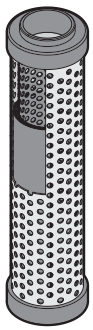

Cylindrically wound particle activated carbon adsorbs oil vapor molecules and odor molecules with a low pressure loss.
High density activated carbon extends element service life.

Long life/low pressure loss element

Element service life curve

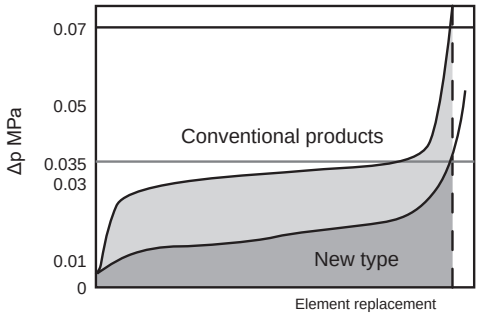

- The pressure loss is half that of conventional products.
- The element is replaced when the pressure drops to 0.035 MPa.
- The element service life is one year when used under normal conditions.

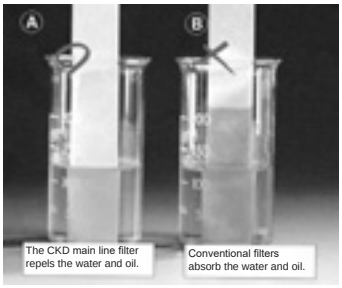

Ⓐ New filter

Borosilicate glass microfibers used in the filtration layer powerfully repel water and oil, allowing the pressure drop and operation costs to be minimized.

Ⓑ Conventional filter

Conventional glass microfibers absorb water and oil, so the pressure easily drops, filtration performance decreases, and operation costs increase.

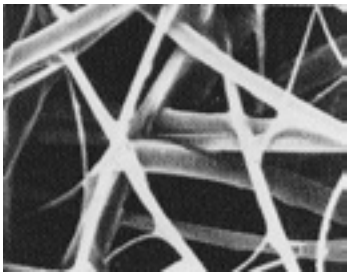

High 96% porosity inside the element fibers helps achieve low pressure loss and a long life



Main line filter

AF5000P Series

For air dryer pre-filter

● Flow rate range: 16 to 256 m^3/min (ANR)

JIS symbol

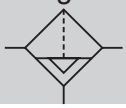

CAD

Specifications

Model No. / Item			AF5016P-50	AF5032P-80	AF5048P-100	AF5064P-100	AF5080P-150	AF5096P-150	AF5128P-150	AF5160P-200	AF5192P-200	AF5256P-200
Processing air flow rate	(*2, *3) m^3/min (ANR)		16	32	48	64	80	96	128	160	192	256
Working fluid			Compressed air									
Working pressure		MPa	0.08 to 1.0									
Proof pressure		MPa	1.5									
Ambient temperature		°C	5 to 60									
Degree of filtration		μm	3									
Pressure drop	Initial	MPa	Within 0.005									
	Normal	MPa	0.01									
	Element replacement	MPa	0.035									
Element quantity			1	2	3	4	5	6	8	10	12	16
Port size	(*1) flange		2B	3B	4B	4B	6B	6B	6B	8B	8B	8B
Weight		kg	38	76	78	107	140	167	223	232	269	330
Differential pressure switch												
Operating pressure differential		MPa	0.04±0.01									
Contact			1 pole a contact									
Max. contact current		A	0.5									
Max. contact voltage		VDC	200									
Max. contact capacitance		W	10									
Max. contact resistance (including reed switch)		mΩ	150									
Drain discharger (model No.: DBV1003D)												
Drain outlet port size			(*4) G 1/4 or ø8 to 10 mm hose fitting									
Power supply			Single phase 95 VAC to 240 VAC 50/60 Hz									

*1: Flange is a 10K flange.
*2: Processing air flow rate is the atmospheric pressure conversion value where the inlet pressure is 0.7 MPa and initial pressure drop is 0.005 MPa.
*3: ANR indicates conditions of 20°C atmospheric pressure and relative humidity 65%.
*4: R1/4 connection is possible with G1/4.

Flow rate compensation coefficient

If the working pressure is other than 0.7 MPa, multiply the processing air flow rate by the above coefficient.

Pressure (MPa)	0.1	0.2	0.3	0.4	0.5	0.6	0.7	0.8	0.9	1.0
Compensation coefficient	0.38	0.53	0.65	0.76	0.85	0.93	1.0	1.07	1.13	1.2

How to order

AF5 016 P - 50 - X1

Ⓐ Flow rate classification

Ⓑ Bore size

Ⓒ Option *1 *2 *3 *5

Code	Description
Ⓐ Flow rate classification m³/min (ANR)	
016	16
032	32
048	48
064	64
080	80
096	96
128	128
160	160
192	192
256	256

Ⓑ Bore size

Flow rate classification		016	032	048	064	080	096	128	160	192	256
50	Flange 2B	●	-	-	-	-	-	-	-	-	-
80	Flange 3B	-	●	-	-	-	-	-	-	-	-
100	Flange 4B	-	-	●	●	-	-	-	-	-	-
150	Flange 6B	-	-	-	-	●	●	●	-	-	-
200	Flange 8B	-	-	-	-	-	-	-	●	●	●

Ⓒ Option

Blank	Standard products
D	Drain discharger 5100-4C (*1)
E	Without drain discharger
K	Companion flange attached
H	English language specifications
H2	SUS nameplate
L	Foundation bolt/nut attached (SS400) (*2)
L1	Foundation bolt/nut attached (SUS304) (*2)
X1	IN/OUT reverse direction (*3)
Y2	Product photo

⚠ Precautions for model No. selection

*1: "D" drain discharger 5100-4C is recommended for working environments where electric wiring is not possible.
*2: "L" and "L1" are applicable to AF5032P to AF5256P.
*3: Viewed from the front, a standard product has an air inlet on the left port, while an air outlet on the right port. For "X1", an air inlet is provided on the right port, while an air outlet is provided on the left port.
*4: Unit performance may not be attained if used at less than the selected pressure. Always select the model No. for the working pressure.
*5: When ordering several options, indicate the required options in alphabetical order.

[Example of model No.]

AF5016P-50-X1

Model: Main line filter AF5000P Series

Ⓐ Flow rate ..... 16 m³/min (ANR)
Ⓑ Bore size ..... Flange 2B
Ⓒ Option ..... IN/OUT reverse direction

Dimensions

● AF5016P

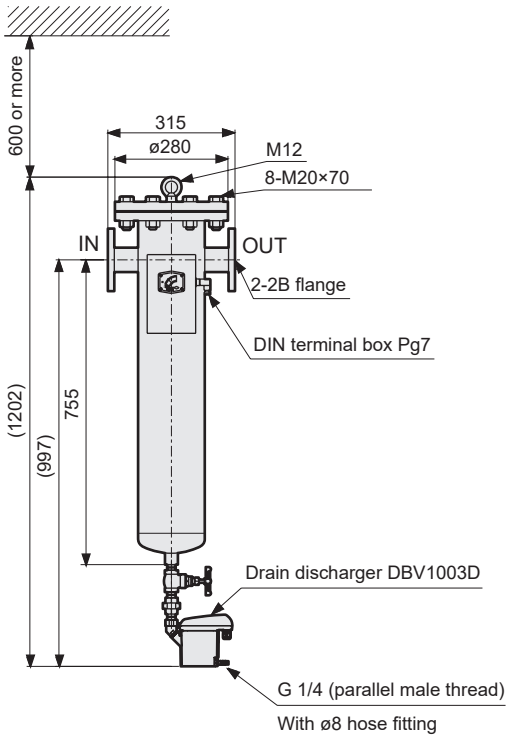

● AF5032P to AF5256P

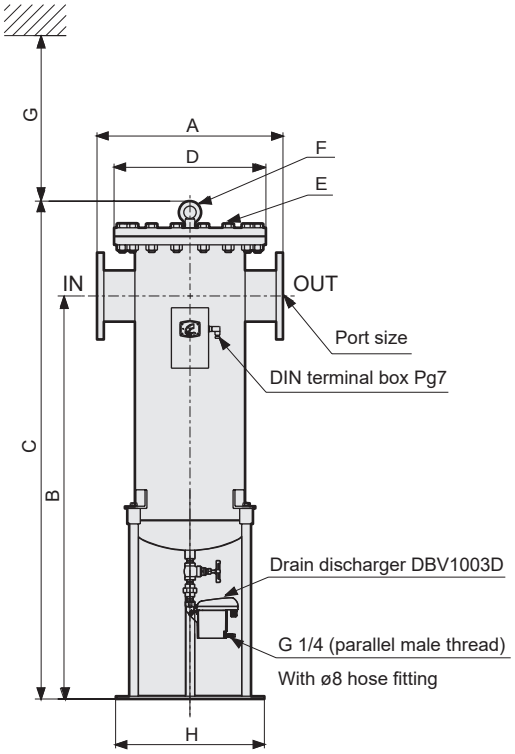

● Foundation bolt hole dimension

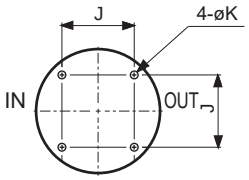

Model No.	Port size	A	B	C	D	E	F	G	H	J	K
AF5032P-80	Flange 3B	500	1255	1495	ø400	12-M22×80	M12	600	ø380	210	ø15
AF5048P-100	Flange 4B	500	1255	1495	ø400	12-M22×80	M12	600	ø380	210	ø15
AF5064P-100	Flange 4B	550	1270	1522	ø445	16-M22×80	M16	600	ø440	250	ø15
AF5080P-150	Flange 6B	600	1300	1606	ø490	16-M22×80	M20	600	ø480	280	ø15
AF5096P-150	Flange 6B	650	1320	1630	ø560	16-M24×90	M20	600	ø540	320	ø15
AF5128P-150	Flange 6B	700	1350	1693	ø620	20-M24×90	M20	600	ø610	350	ø15
AF5160P-200	Flange 8B	700	1350	1693	ø620	20-M24×90	M20	600	ø610	350	ø15
AF5192P-200	Flange 8B	750	1360	1709	ø675	20-M24×100	M20	600	ø670	400	ø15
AF5256P-200	Flange 8B	850	1400	1786	ø745	20-M30×110	M24	600	ø730	450	ø15

Repair parts list

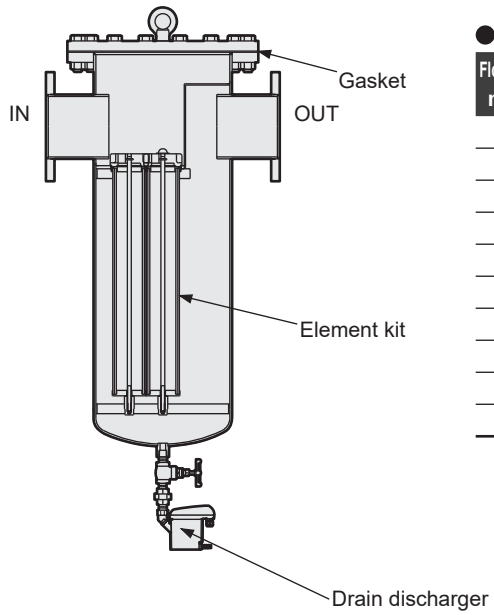

● Ordering method

Flow rate classification m³/min(ANR)	Gasket	Element kit	Drain discharger
16	AF5016P-GASKET	AF5016P-ELEMENT-KIT	AF-DBV1003D-15
32	AF5032P-GASKET	AF5032P-ELEMENT-KIT	
48	AF5048P-GASKET	AF5048P-ELEMENT-KIT	
64	AF5064P-GASKET	AF5064P-ELEMENT-KIT	
80	AF5080P-GASKET	AF5080P-ELEMENT-KIT	
96	AF5096P-GASKET	AF5096P-ELEMENT-KIT	
128	AF5128P-GASKET	AF5128P-ELEMENT-KIT	
160	AF5160P-GASKET	AF5160P-ELEMENT-KIT	
192	AF5192P-GASKET	AF5192P-ELEMENT-KIT	
256	AF5256P-GASKET	AF5256P-ELEMENT-KIT	



Micro alescer

AF5000S Series

Protect expensive pneumatic components

● Flow rate range: 16 to 256 m^3/min (ANR)

JIS symbol

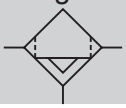

CAD

Specifications

Model No. / Item			AF5016S-50	AF5032S-80	AF5048S-100	AF5064S-100	AF5080S-150	AF5096S-150	AF5128S-150	AF5160S-200	AF5192S-200	AF5256S-200
Processing air flow rate	(*2, *3) m^3/min (ANR)		16	32	48	64	80	96	128	160	192	256
Working fluid			Compressed air									
Working pressure		MPa	0.08 to 1.0									
Proof pressure		MPa	1.5									
Ambient temperature		°C	5 to 60									
Filtration rating		μm	0.3									
Secondary side oil concentration		mg/m^3	0.5 (at inlet air 21°C or less)									
Pressure drop	Initial	MPa	0.007									
	Normal	MPa	0.014									
	Element replacement	MPa	0.035									
Element quantity			1	2	3	4	5	6	8	10	12	16
Port size		(*1) flange	2B	3B	4B	4B	6B	6B	6B	8B	8B	8B
Weight kg			38	76	78	107	140	167	223	232	269	330
Differential pressure switch												
Operating pressure differential		MPa	0.04±0.01									
Contact			1 pole a contact									
Max. contact current		A	0.5									
Max. contact voltage		VDC	200									
Max. contact capacitance		W	10									
Max. contact resistance (including reed switch)		mΩ	150									
Drain discharger (model No.: DBV1003D)												
Drain outlet port size			(*4) G1/4 or ø8-10 mm hose fitting									
Power supply			Single phase 95 VAC to 240 VAC 50/60 Hz									

*1: Flange is a 10K flange.
*2: Processing air flow rate is the atmospheric pressure conversion value where the inlet pressure is 0.7 MPa and initial pressure drop is 0.007 MPa.
*3: ANR indicates conditions of 20°C atmospheric pressure and relative humidity 65%.
*4: R1/4 connection is possible with G1/4.

Flow rate compensation coefficient

If the working pressure is other than 0.7 MPa, multiply the processing air flow rate by the above coefficient.

Pressure (MPa)	0.1	0.2	0.3	0.4	0.5	0.6	0.7	0.8	0.9	1.0
Compensation coefficient	0.38	0.53	0.65	0.76	0.85	0.93	1.0	1.07	1.13	1.2

How to order

AF5 **016** **S** **-** **50** **-** **X1**

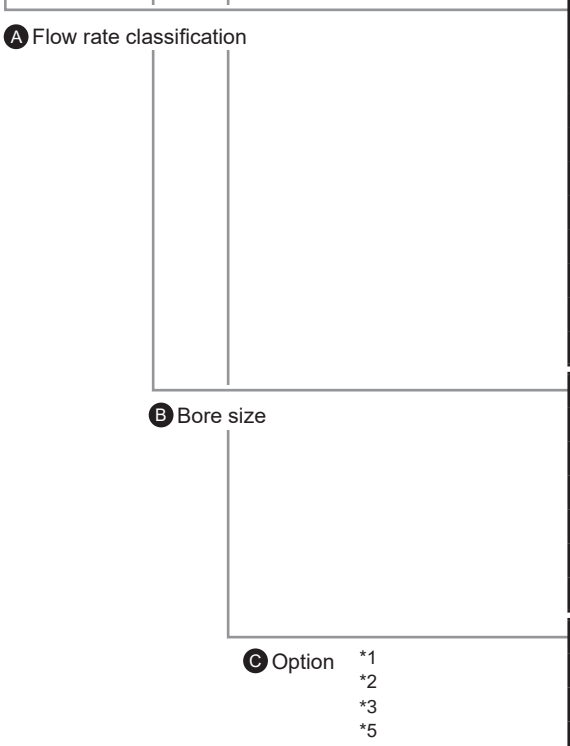

Code	Description
Ⓐ Flow rate classification m³/min (ANR)	
016	16
032	32
048	48
064	64
080	80
096	96
128	128
160	160
192	192
256	256

Ⓑ Bore size

Flow rate classification		016	032	048	064	080	096	128	160	192	256
50	Flange 2B	●	-	-	-	-	-	-	-	-	-
80	Flange 3B	-	●	-	-	-	-	-	-	-	-
100	Flange 4B	-	-	●	●	-	-	-	-	-	-
150	Flange 6B	-	-	-	-	●	●	●	-	-	-
200	Flange 8B	-	-	-	-	-	-	-	●	●	●

Ⓒ Option	
Blank	Standard products
D	Drain discharger 5100-4C (*1)
E	Without drain discharger
K	Companion flange attached
H	English language specifications
H2	SUS nameplate
L	Foundation bolt/nut attached (SS400) (*2)
L1	Foundation bolt/nut attached (SUS304) (*2)
X1	IN/OUT reverse direction (*3)
Y2	Product photo

⚠ Precautions for model No. selection

*1: "D" drain discharger 5100-4C is recommended for working environments where electric wiring is not possible.
*2: "L" and "L1" are applicable to AF5032S to AF5256S.
*3: Viewed from the front, a standard product has an air inlet on the left port, while an air outlet on the right port. For "X1", an air inlet is provided on the right port, while an air outlet is provided on the left port.
*4: Unit performance may not be attained if used at less than the selected pressure. Always select the model No. for the working pressure.
*5: When ordering several options, indicate the required options in alphabetical order.

[Example of model No.]

AF5016S-50-X1

Model: Main line filter AF5000S Series
Ⓐ Flow rate ..... 16 m³/min (ANR)
Ⓑ Bore size ..... Flange 2B
Ⓒ Option ..... IN/OUT reverse direction

Dimensions

● AF5016S

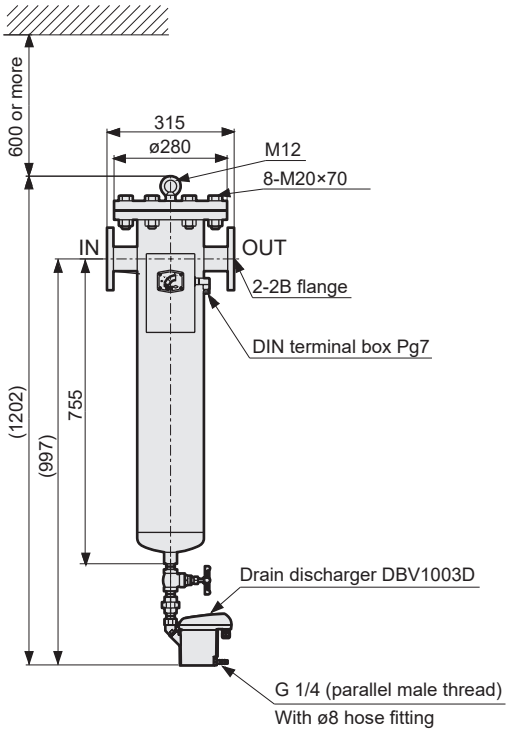

● AF5032S to AF5256S

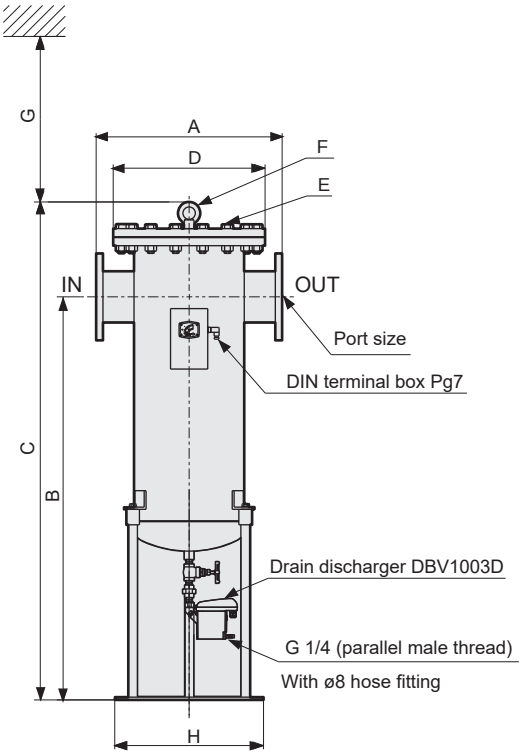

● Foundation bolt hole dimension

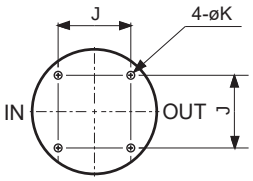

Model No.	Port size	A	B	C	D	E	F	G	H	J	K
AF5032S-80	Flange 3B	500	1255	1495	ø400	12-M22×80	M12	600	ø380	210	ø15
AF5048S-100	Flange 4B	500	1255	1495	ø400	12-M22×80	M12	600	ø380	210	ø15
AF5064S-100	Flange 4B	550	1270	1522	ø445	16-M22×80	M16	600	ø440	250	ø15
AF5080S-150	Flange 6B	600	1300	1606	ø490	16-M22×80	M20	600	ø480	280	ø15
AF5096S-150	Flange 6B	650	1320	1630	ø560	16-M24×90	M20	600	ø540	320	ø15
AF5128S-150	Flange 6B	700	1350	1693	ø620	20-M24×90	M20	600	ø610	350	ø15
AF5160S-200	Flange 8B	700	1350	1693	ø620	20-M24×90	M20	600	ø610	350	ø15
AF5192S-200	Flange 8B	750	1360	1709	ø675	20-M24×100	M20	600	ø670	400	ø15
AF5256S-200	Flange 8B	850	1400	1786	ø745	20-M30×110	M24	600	ø730	450	ø15

Repair parts list

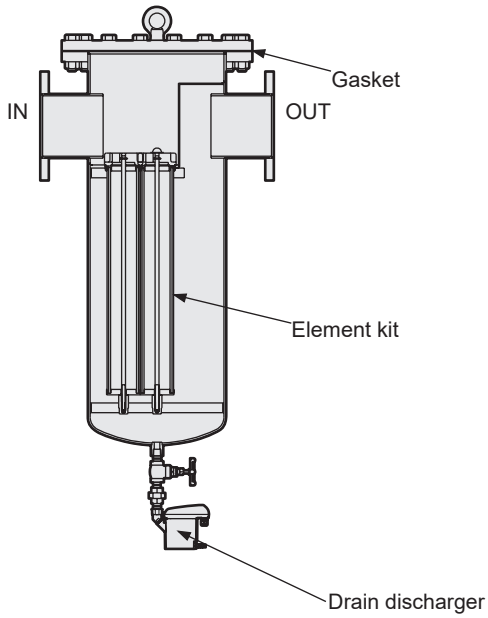

● Ordering method

Flow rate classification m³/min(ANR)	Gasket	Element kit	Drain discharger
16	AF5016P-GASKET	AF5016S-ELEMENT-KIT	AF-DBV1003D-15
32	AF5032P-GASKET	AF5032S-ELEMENT-KIT	
48	AF5048P-GASKET	AF5048S-ELEMENT-KIT	
64	AF5064P-GASKET	AF5064S-ELEMENT-KIT	
80	AF5080P-GASKET	AF5080S-ELEMENT-KIT	
96	AF5096P-GASKET	AF5096S-ELEMENT-KIT	
128	AF5128P-GASKET	AF5128S-ELEMENT-KIT	
160	AF5160P-GASKET	AF5160S-ELEMENT-KIT	
192	AF5192P-GASKET	AF5192S-ELEMENT-KIT	
256	AF5256P-GASKET	AF5256S-ELEMENT-KIT	

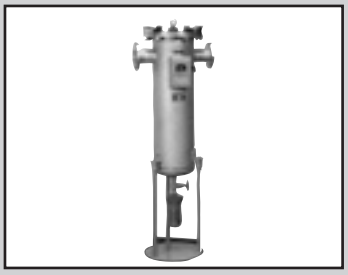

Micro alescer

AF5000M Series

For pneumatic pressure circuits which are susceptible to oil

● Flow rate range: 16 to 256 m^3/min (ANR)

JIS symbol

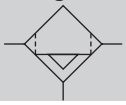

CAD

Specifications

Model No. / Item			AF5016M-50	AF5032M-80	AF5048M-100	AF5064M-100	AF5080M-150	AF5096M-150	AF5128M-150	AF5160M-200	AF5192M-200	AF5256M-200
Processing air flow rate	(*2, *3) m^3/min (ANR)		16	32	48	64	80	96	128	160	192	256
Working fluid			Compressed air									
Working pressure		MPa	0.08 to 1.0									
Proof pressure		MPa	1.5									
Ambient temperature		°C	5 to 60									
Filtration rating		μm	0.01									
Secondary side oil concentration		mg/m^3	0.01 (at inlet air 21°C or less)									
Pressure drop	Initial	MPa	0.01									
	Normal	MPa	0.02									
	Element replacement	MPa	0.035									
Element quantity			1	2	3	4	5	6	8	10	12	16
Port size		(*1) Flange	2B	3B	4B	4B	6B	6B	6B	8B	8B	8B
Weight		kg	38	76	78	107	140	167	223	232	269	330
Differential pressure switch												
Operating pressure differential		MPa	0.04±0.01									
Contact			1 pole a contact									
Max. contact current		A	0.5									
Max. contact voltage		VDC	200									
Max. contact capacitance		W	10									
Max. contact resistance (including reed switch)		mΩ	150									
Drain discharger(Model No.:5100-4C)												
Drain outlet port size			Rc 1/4									

*1: Flange is a 10K flange.
*2: Processing air flow rate is the atmospheric pressure conversion value where the inlet pressure is 0.7 MPa and initial pressure drop is 0.01 MPa.
*3: ANR indicates conditions of 20°C atmospheric pressure and relative humidity 65%.

Flow rate compensation coefficient

If the working pressure is other than 0.7 MPa, multiply the processing air flow rate by the above coefficient.

Pressure (MPa)	0.1	0.2	0.3	0.4	0.5	0.6	0.7	0.8	0.9	1.0
Compensation coefficient	0.38	0.53	0.65	0.76	0.85	0.93	1.0	1.07	1.13	1.2

How to order

AF5 016 M - 50 - X1

Ⓐ Flow rate classification
Ⓑ Bore size
Ⓒ Option *1 *2 *4

Code	Description
Ⓐ Flow rate classification m³/min (ANR)	
016	16
032	32
048	48
064	64
080	80
096	96
128	128
160	160
192	192
256	256

Ⓑ Bore size

Flow rate classification		016	032	048	064	080	096	128	160	192	256
50	Flange 2B	●	-	-	-	-	-	-	-	-	-
80	Flange 3B	-	●	-	-	-	-	-	-	-	-
100	Flange 4B	-	-	●	●	-	-	-	-	-	-
150	Flange 6B	-	-	-	-	●	●	●	-	-	-
200	Flange 8B	-	-	-	-	-	-	-	●	●	●

Ⓒ Option

Blank	Standard products
E	Without drain discharger
K	Companion flange attached
H	English language specifications
H2	SUS nameplate
L	Foundation bolt/nut attached (SS400) (*1)
L1	Foundation bolt/nut attached (SUS304) (*1)
X1	IN/OUT reverse direction (*3)
Y2	Product photo

⚠ Precautions for model No. selection

*1: "L" and "L1" are applicable to AF5032M to AF5256M.
*2: Viewed from the front, a standard product has an air inlet on the left port, while an air outlet on the right port. For "X1", an air inlet is provided on the right port, while an air outlet is provided on the left port.
*3: Unit performance may not be attained if used at less than the selected pressure. Always select the model No. for the working pressure.
*4: When ordering several options, indicate the required options in alphabetical order.

[Example of model No.]

AF5016M-50-X1

Model: Main line filter AF5000M Series
Ⓐ Flow rate ..... 16 m³/min (ANR)
Ⓑ Bore size ..... Flange 2B
Ⓒ Option ..... IN/OUT reverse direction

Dimensions

● AF5016M

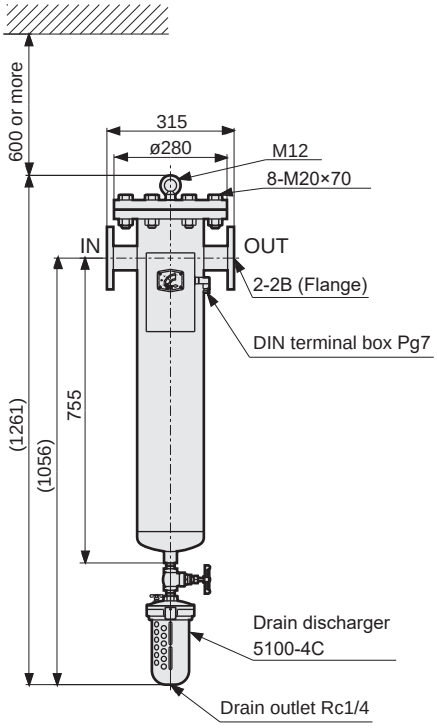

● AF5032M to AF5256M

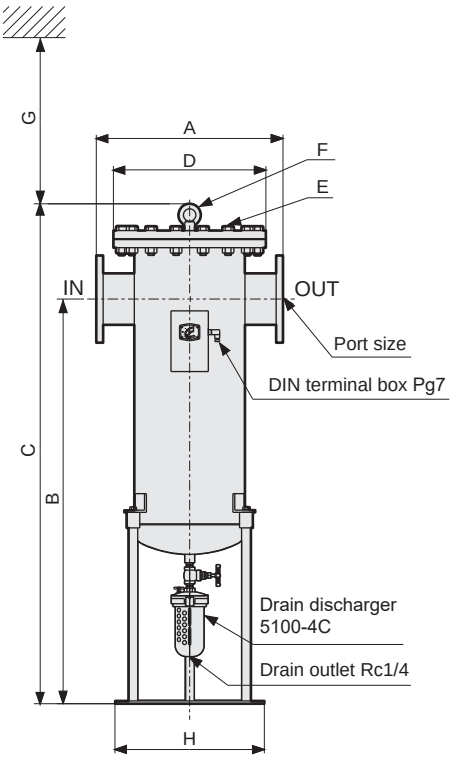

● Foundation bolt hole dimension

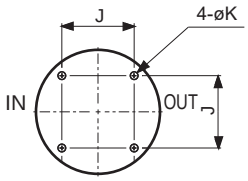

Model No.	Port size	A	B	C	D	E	F	G	H	J	K
AF5032M-80	Flange 3B	500	1255	1495	ø400	12-M22×80	M12	600	ø380	210	ø15
AF5048M-100	Flange 4B	500	1255	1495	ø400	12-M22×80	M12	600	ø380	210	ø15
AF5064M-100	Flange 4B	550	1270	1522	ø445	16-M22×80	M16	600	ø440	250	ø15
AF5080M-150	Flange 6B	600	1300	1606	ø490	16-M22×80	M20	600	ø480	280	ø15
AF5096M-150	Flange 6B	650	1320	1630	ø560	16-M24×90	M20	600	ø540	320	ø15
AF5128M-150	Flange 6B	700	1350	1693	ø620	20-M24×90	M20	600	ø610	350	ø15
AF5160M-200	Flange 8B	700	1350	1693	ø620	20-M24×90	M20	600	ø610	350	ø15
AF5192M-200	Flange 8B	750	1360	1709	ø675	20-M24×100	M20	600	ø670	400	ø15
AF5256M-200	Flange 8B	850	1400	1786	ø745	20-M30×110	M24	600	ø730	450	ø15

Repair parts list

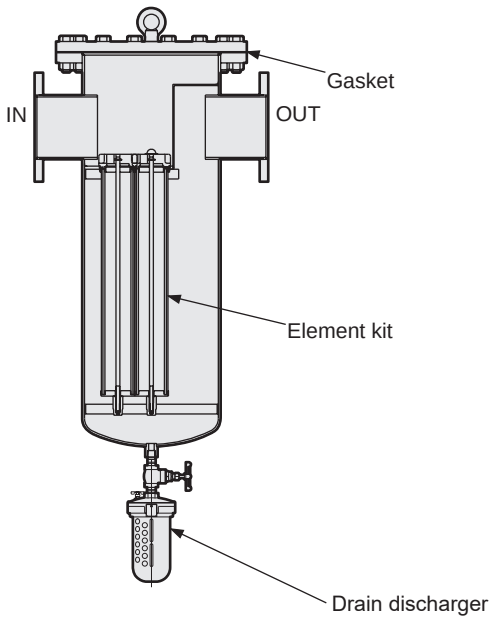

● Ordering method

Flow rate classification m³/min(ANR)	Gasket	Element kit	Drain discharger
16	AF5016P-GASKET	AF5016M-ELEMENT-KIT	5100-4C
32	AF5032P-GASKET	AF5032M-ELEMENT-KIT	
48	AF5048P-GASKET	AF5048M-ELEMENT-KIT	
64	AF5064P-GASKET	AF5064M-ELEMENT-KIT	
80	AF5080P-GASKET	AF5080M-ELEMENT-KIT	
96	AF5096P-GASKET	AF5096M-ELEMENT-KIT	
128	AF5128P-GASKET	AF5128M-ELEMENT-KIT	
160	AF5160P-GASKET	AF5160M-ELEMENT-KIT	
192	AF5192P-GASKET	AF5192M-ELEMENT-KIT	
256	AF5256P-GASKET	AF5256M-ELEMENT-KIT	

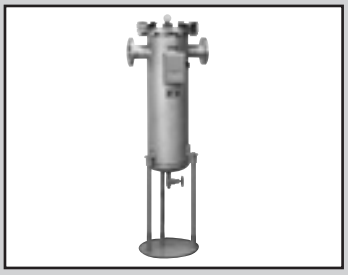

Micro alescer

AF5000X Series

For pneumatic pressure circuits which are susceptible to odors

● Flow rate range: 16 to 256 m^3/min (ANR)

JIS symbol 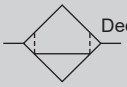 Deodorization

CAD

Specifications

Model No. / Item		AF5016X-50	AF5032X-80	AF5048X-100	AF5064X-100	AF5080X-150	AF5096X-150	AF5128X-150	AF5160X-200	AF5192X-200	AF5256X-200
Processing air flow rate	(*2, *3) m^3/min (ANR)	16	32	48	64	80	96	128	160	192	256
Working fluid		Compressed air									
Working pressure	MPa	0.08 (≈12 psi, 0.8 bar) to 1.0 (≈150 psi, 10 bar)									
Proof pressure	MPa	1.5 (≈220 psi, 15 bar)									
Ambient temperature	°C	5 (41°F) to 30 (86°F)									
Filtration method		Suction by activated carbon									
Secondary side oil concentration	mg/m^3	0.003 (at inlet air 21°C (69.8°F) or less)									
Initial pressure drop	MPa	Within 0.007 (≈1 psi, 0.07 bar)									
Element quantity		1	2	3	4	5	6	8	10	12	16
Port size	(*1) Flange	2B	3B	4B	4B	6B	6B	6B	8B	8B	8B
Weight	kg	38	76	78	107	140	167	223	232	269	330

*1: Flange is 10K flange.
*2: Processing air flow rate is the atmospheric pressure conversion value where the inlet pressure is 0.7 MPa and initial pressure drop is 0.007 MPa.
*3: ANR indicates conditions of 20°C atmospheric pressure and relative humidity 65%.

Flow rate compensation coefficient

If the working pressure is other than 0.7 MPa, multiply the processing air flow rate by the above coefficient.

Pressure (MPa)	0.1	0.2	0.3	0.4	0.5	0.6	0.7	0.8	0.9	1.0
Compensation coeff	0.38	0.53	0.65	0.76	0.85	0.93	1.0	1.07	1.13	1.2

How to order

AF5 016 X -50-X1

Ⓐ Flow rate classification

Ⓑ Bore size

Ⓒ Option *1 *2 *4

Code	Description
Ⓐ Flow rate classification m³/min (ANR)	
016	16
032	32
048	48
064	64
080	80
096	96
128	128
160	160
192	192
256	256

Ⓑ Bore size

Flow rate classification		016	032	048	064	080	096	128	160	192	256
50	Flange 2B	●	-	-	-	-	-	-	-	-	-
80	Flange 3B	-	●	-	-	-	-	-	-	-	-
100	Flange 4B	-	-	●	●	-	-	-	-	-	-
150	Flange 6B	-	-	-	-	●	●	●	-	-	-
200	Flange 8B	-	-	-	-	-	-	-	●	●	●

Ⓒ Option	
Blank	Standard products
K	Companion flange attached
H	English language specifications
H2	SUS nameplate
L	Foundation bolt/nut attached (SS400) (*1)
L1	Foundation bolt/nut attached (SUS304) (*1)
X1	IN/OUT reverse direction (*2)
Y2	Product photo

⚠ Precautions for model No. selection

*1: "L" and "L1" are applicable to AF5032X to AF5256X.
*2: Viewed from the front, a standard product has an air inlet on the left port, while an air outlet on the right port. For "X1", an air inlet is provided on the right port, while an air outlet is provided on the left port.
*3: Unit performance may not be attained if used at less than the selected pressure. Always select the model No. for the working pressure.
*4: When ordering several options, indicate the required options in alphabetical order.

[Example of model No.]

AF5016X-50-X1

Model: Main line filter AF5000X Series
Ⓐ Flow rate ..... 16 m³/min (ANR)
Ⓑ Bore size ..... Flange 2B
Ⓒ Option ..... IN/OUT reverse direction

Dimensions

● AF5016X

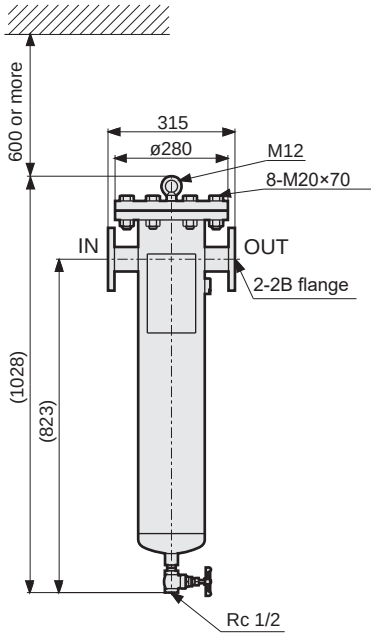

● AF5032X to AF5256X

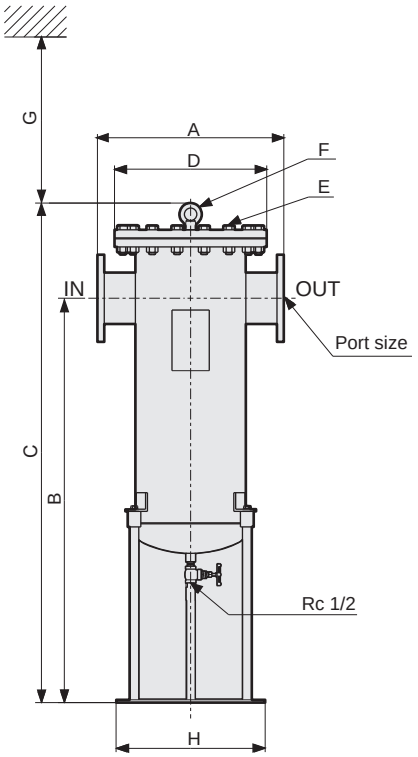

● Foundation bolt hole dimension

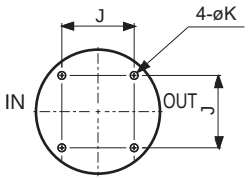

Model No.	Port size	A	B	C	D	E	F	G	H	J	K
AF5032X-80	Flange 3B	500	1255	1495	ø400	12-M22×80	M12	600	ø380	210	ø15
AF5048X-100	Flange 4B	500	1255	1495	ø400	12-M22×80	M12	600	ø380	210	ø15
AF5064X-100	Flange 4B	550	1270	1522	ø445	16-M22×80	M16	600	ø440	250	ø15
AF5080X-150	Flange 6B	600	1300	1606	ø490	16-M22×80	M20	600	ø480	280	ø15
AF5096X-150	Flange 6B	650	1320	1630	ø560	16-M24×90	M20	600	ø540	320	ø15
AF5128X-150	Flange 6B	700	1350	1693	ø620	20-M24×90	M20	600	ø610	350	ø15
AF5160X-200	Flange 8B	700	1350	1693	ø620	20-M24×90	M20	600	ø610	350	ø15
AF5192X-200	Flange 8B	750	1360	1709	ø675	20-M24×100	M20	600	ø670	400	ø15
AF5256X-200	Flange 8B	850	1400	1786	ø745	20-M30×110	M24	600	ø730	450	ø15

Repair parts list

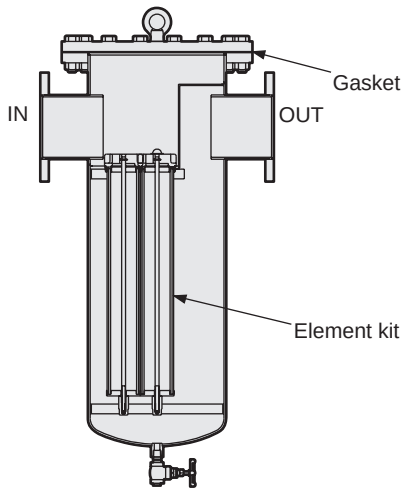

● Ordering method

Flow rate classification m³/min(ANR)	Gasket	Element kit
16	AF5016P-GASKET	AF5016X-ELEMENT-KIT
32	AF5032P-GASKET	AF5032X-ELEMENT-KIT
48	AF5048P-GASKET	AF5048X-ELEMENT-KIT
64	AF5064P-GASKET	AF5064X-ELEMENT-KIT
80	AF5080P-GASKET	AF5080X-ELEMENT-KIT
96	AF5096P-GASKET	AF5096X-ELEMENT-KIT
128	AF5128P-GASKET	AF5128X-ELEMENT-KIT
160	AF5160P-GASKET	AF5160X-ELEMENT-KIT
192	AF5192P-GASKET	AF5192X-ELEMENT-KIT
256	AF5256P-GASKET	AF5256X-ELEMENT-KIT

*1: Drain discharger
AF5000X: none

Main line component (Main line unit)

Safety Precautions

Be sure to read this section before use.
Refer to Intro Page 63 for general precautions.

Product-specific cautions: Large main line filter AF5000 Series

Manufacturer's Exemption of Liability

⚠ WARNING

■ The manufacturer cannot be held liable in the following cases:
- In the case where there are serious errors in the operator's use.
- Inappropriate modifications or repairs using nonstandard parts, made by the user.

Design/selection

⚠ WARNING

■ Do not use for applications other than compressed air.

■ Do not use for caisson shields or medical devices such as breathing devices, or for direct air blow onto foodstuffs.
- There is a risk of personal injury.

■ Do not mount and use this device on transportation equipment such as vehicles or ships.
- The internal devices could be damaged by vibration, etc.

■ Avoid direct sunlight and rainwater.
The resin parts, etc., could deteriorate and break.

■ Do not use in locations with corrosive gases.

■ Use this product within the operating ambient temperature.

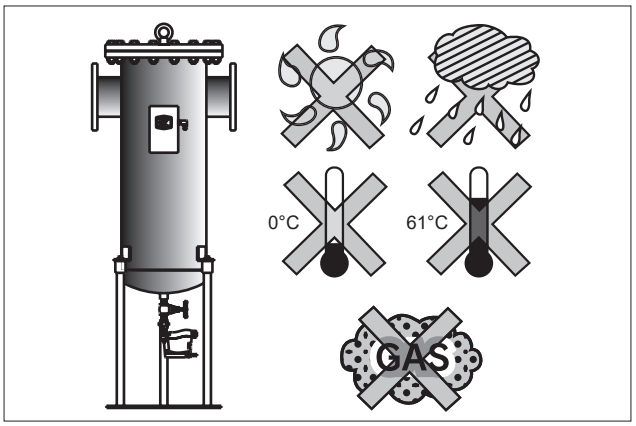

■ Do not use in locations at risk of freezing. The accumulated drainage could freeze and damage the product.

■ Do not use in hazardous locations (possibly explosive atmospheres, etc.).

■ We recommend keeping the inlet air temperature as low as possible. The oil removing rate will drop if the temperature is high.

■ Do not use this product in an ozone generating environment.

■ Avoid using this product where vibration and impact are present.

■ Do not use this product in areas containing dust, etc.

■ Do not use this product in an environment in which the compressed air contains the following types of gases.
- Sulfur dioxide, chlorine gas
- Aromatic hydrocarbon compounds
  (For example, benzene, toluene, phenol, cyclohexane, etc.)
- Chlorinated hydrocarbon compounds
  (For example, trichloroethylene, chloroform, etc.)
- Ketones (for example, acetone, etc.)
- Aldehydes
  (For example, formaldehyde or acetaldehyde, etc.)
- Amines (For example, ethylamine, methylamine, etc.)

■ Always set the air flow to within the working pressure range, and use treated air.
- Failure to observe this may prevent proper removal of water, dust and oil.

■ Install indoors.

Mounting, installation and adjustment

⚠ CAUTION

■ "Class 2 pressure vessel" of the "Safety regulation of boiler and pressure vessel" of Occupational Safety Sanitation Act applies to model No. AF5032 to 5256.

■ Model numbers AF5032 to AF5256 have a Class 2 pressure vessel pressure proof certificate. This certificate must be kept safely while using this device. (Applications to the Labor Standards Supervision Office are not required in Japan.)

■ This device may only be used in Japan.
(Contact CKD regarding use overseas.)

■ Install this device on a stable, flat surface not subject to vibration.

■ Do not step onto the body.

■ When piping, remove coolant and rust preventing agent, etc.

■ Secure enough space for maintenance and inspection.

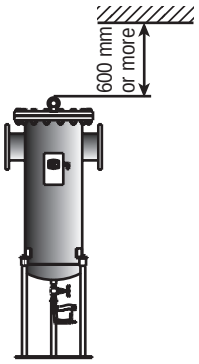

- The element and differential pressure indicator could be damaged if air flows through suddenly. When installing valves, etc., before and after this product, do not operate the valves suddenly. Do not install this filter in a system where a reverse flow could occur or where impact could be applied easily.
- Flush the drain piping with air blow before mounting to the main body.Remove the foreign matter.
- Connect a tube pipe, etc., to the drain outlet.
- Drainage is discharged with pressure, so securely fix the piping at the drain port so that drainage may splatterbe careful.
- If the drain outlet piping slopes upward, the min. working pressure will increase by 0.01MPa per 1 m. Please be careful. Make sure that the rising piping does not exceed 5 m.
- Mount the bowl vertically facing downward. Failure to do so could cause drainage discharge faults. Lay the drain pipe so that it is not pressurized. Laying several pipes together or attaching a check valve will create a pressurized state. Do not lay the pipes in this state.
- The differential switch is a reed switch, so do not apply magnetic fields.

Use/maintenance

⚠CAUTION

- A differential pressure indicator is provided as standard.Judge the element life.
- Do not use reverse air flow.
  Do not pressurize suddenly. Otherwise, the original performance may not be attained.

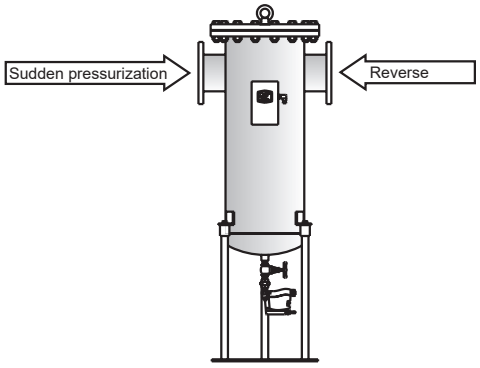

- The air filter life is spent when the pressure drops to 0.035 MPa or after one year of use, whichever comes first. Change all elements when the service life is reached. X type cannot control service life due to the differential pressure. Therefore, replace the filter after 1000 hours of use or when the deodorizing effect is lost.

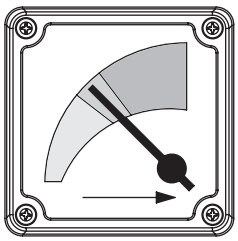



- Release the air in the bowl before inspecting the auto-drain for improper discharge, etc. Wash the drain unit with water, and then blow out all moisture with an air gun.Please take a row.
- Use a household neutral detergent to wash the bowl, and then rinse with water.

[Drain discharger: DBV1003D]

- Use the product within the rated voltage range of 95 VAC to 240 VAC.
- Use this product within working pressure range.
- The drain outlet closes when the power is OFF, so drainage will not be discharged. Drainage will be discharged only when power is ON, so leave the power ON at all times during use.
- Check whether the Power indicator is ON.
- Check whether the Alarm indicator is OFF.
- Press the TEST button, and confirm that drainage is discharged. However, 1MinutesThe alarm mode is entered if the button is held down. (Alarm is output)

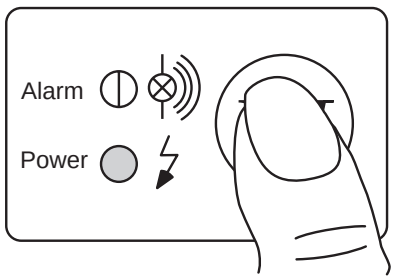

- Maintenance and repairs must always be done in an unpressurized state with the power turned OFF.
- Use only genuine consumable parts.
- The "Power" lamp blinks after one year or 1 million operation cycles. Refer to the instruction manual of the DBV1003D to replace the service unit.

Drain discharger

■ **Main line units**

CONTENTS

Drain discharger

Drain discharger series variation 1904

Automatic drain
DT Series 1906

Automatic drain
DB Series 1914

Drain sensor
DBS1006 1919

Heavy duty drain
5100 Series 1922

Series variation

Drain discharger

	Float				
Series	DT3000-W	DT4000-W	5100	DB1000	
Features / Dryer / kW	• Normally open DT3000-W • Normally closed DT3100-W	• Normally open DT4000-W • Normally closed DT4100-W	Heavy duty	For lubrication compressor	
0.75					
1.5					
2.2					
3.7					
5.5					
7.5					
11					
15					
22					
37					
55				●	
75					
95					
120					
150					
200					
250				●	
300					
400					
480					
710					
960				●	
1450					
2000					
Medium pressure (1.6 MPa)	x	x	x	● Standard compliance	
Alarm output	x	x	x	● Standard equipment	
Manual discharge	● Standard equipment	● Standard equipment	x	● Standard equipment	
Appearance					
Page	1908	1908	1922	1916	

	Electronic	
	DB3000	DBS1006
	For no-lubrication compressor (rust proof coating)	Drain level sensor (without discharge function)
	●	
	●	●
	●	
	●	
	●	
	● Standard compliance	● Standard compliance
	● Standard equipment	● Standard equipment
	● Standard equipment	x
		
	1916	1919

Normally open and Normally closed float auto-drain DT3000-W and DT4000-W

Normally open:
The drain exhaust valve (port) is open when pressure is not applied inside the auto-drain device.
Normally closed:
The drain exhaust valve (port) is closed when pressure is not applied inside the auto-drain device.

- Generally the NO is used so that drain in the auto-drain can fall freely and be discharged when the air line is not in operation (i.e., when pressure is not applied).
- With this type, if air supply is insufficient at the start of operation, air is released from the open drain exhaust valve (port) preventing rise of pressure.
- If the case above is expected (when air compressor capacity is less than 0.75 kW and air supply rate is 0.09 m^3/min or less), use the NC.
  With the NC, drain is not discharged and accumulates in the bowl unless the pressure is applied (i.e., if the pressure is 0.15 MPa or less).

Note) This list is a selection guideline.
For final selection, refer to the relevant page and select a model upon confirming installation and operating conditions

Automatic drain DT Series

Lightweight and compact. The newly adopted mechanism has enabled a highly reliable drain discharger with long service life.

[Overview]

1 Automatic drain DT3000/4000-W Series automatically discharge drain from the pneumatic circuit.
2 The newly adopted snap-action mechanism has improved durability beyond the conventional types.
3 Manual discharge as desired is possible in addition to automatic discharge.



AUTOMATIC DRAIN DT3000-4000-W SERIES

Two connection ports

Either top or side piping can be selected based on the application.

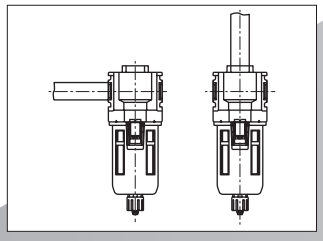

* Mount the included blanking plug on the port not in use.

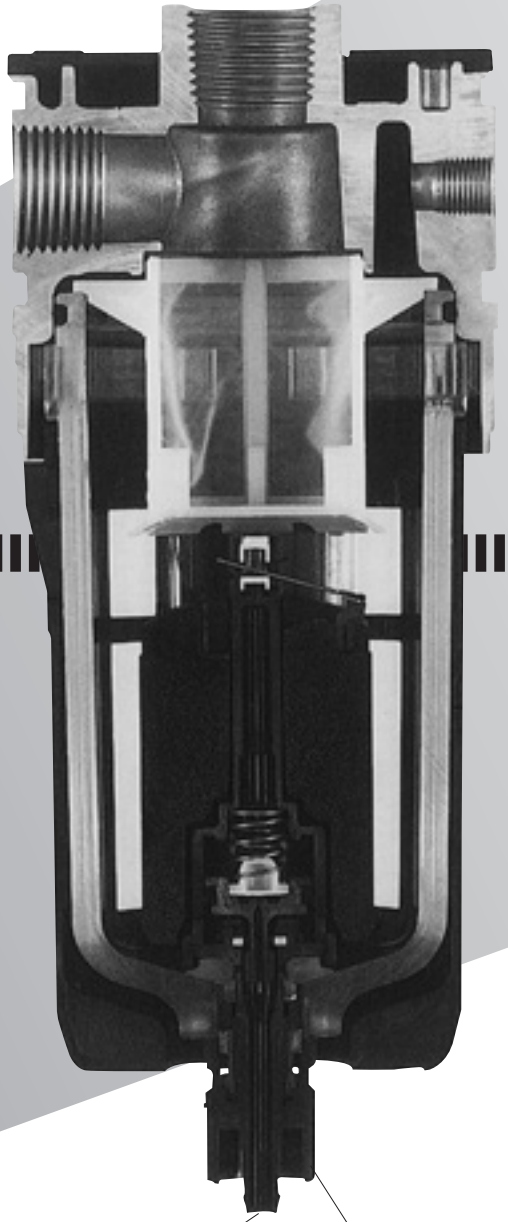

Compact & lightweight

Combining different materials (body: aluminum die-cast, cover: resin) has enabled a strong body lighter than the conventional model.

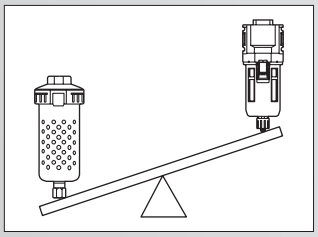

Quick-release latch

The bowl and bowl guard are easily attached/detached together with the quick-release latch.

* Confirm that pressure has been released before mounting or removing the bowl and bowl guard.

Either NO or NC

Normally open or normally closed can be selected according to the application.

Highly corrosion resistant, safe bowl guard

Very safe and corrosion resistant plastic bowl guard is used.

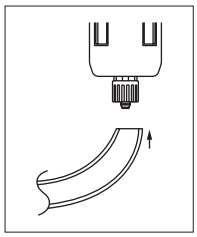

Integrated fitting for drain pipe

ø5.7 to ø6 bore size nylon tube can be connected directly.

* Keep the length 5 m or less. Do not use riser piping.

Manual cock provided as standard

The manual cock allows manual discharging as desired.
It can also be used as residual pressure exhaust valve.

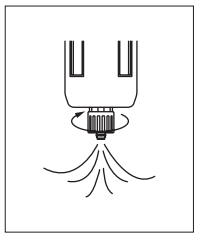



Automatic drain

DT3000-W/DT4000-W Series

Lightweight and compact automatic drain discharger.

● Compatible compressor: 0.75 kW to 75 kW

JIS symbol 

RoHS CAD

Specifications

Item		DT3000-W	DT4000-W	DT3010-W	DT4010-W
Type		Normally open (*1)		Normally closed	
Working fluid		Drain contained in the compressed air (water or oil)			
Proof pressure	MPa	1.5 (≈220 psi, 15 bar)			
Working pressure range	MPa	0.1 (≈15 psi, 1 bar) to 1 (≈150 psi, 10 bar)		0.15 (≈22 psi, 1.5 bar) to 1 (≈150 psi, 10 bar)	
Operating ambient temperature range	℃	5 (41°F) to 60 (140°F)			
Port size	Rc,NPT,G	3/8, 1/2			
Drain outlet		Barbed nipple (soft nylon tube of ø5.7 to ø6 bore size can be connected directly)			
Weight	kg	0.3	0.45	0.3	0.45

*1: If capacity of the air compressor used is less than 0.75 kW (0.09 m^3/min or less air supply rate), use the NC.

How to order

DT3000 - 10 ( ) - W - Z - BW (White type)

- Ⓐ Model No.
- Ⓑ Port size
- Ⓒ Port thread
- Ⓓ Option
- Ⓔ Attachment *2

Code	Description
Ⓐ Model No.	
DT3000	Normally open auto-drain
DT3010	Normally closed auto-drain
DT4000	Normally open auto-drain
DT4010	Normally closed auto-drain
Ⓑ Port size	
10	3/8
15	1/2
Ⓒ Port thread	
Blank	Rc thread
N	NPT thread
G	G thread
Ⓓ Option	
Bowl material **Blank**	Polycarbonate bowl
Bowl material **Z**	Nylon bowl
Bowl material **M *1**	Metal bowl (with gauge) drain port Rc1/8
Bowl material **M2 *1**	Metal bowl (with gauge) drain port Rc1/4
Cock Attached **Blank**	With pipe plug attached
Cock Attached **C *1**	With cock (without pipe plug)
Ⓔ Attachment	
Blank	Not included
BW	C-bracket

Precautions for model No. selection

*1: A cock is included.

*2: C-bracket model No. DT3000-W.....B320
DT4000-W.....B420

*3: A masking plug matching the port size is attached.

Bowl type and shape

Type / Bowl material / Compatible series		Normally open (open at no pressure) DT3000-W/DT4000-W	Normally closed (closed at no pressure) DT3010-W/DT4010-W
DT3000-W DT4000-W	Plastic	● With manual cock 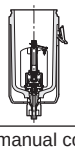	● With manual cock 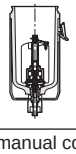
	Metal	● Without manual cock [M, M2] 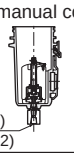 Rc1/8(M) Rc1/4(M2)	● Without manual cock [M, M2] 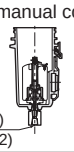 Rc1/8(M) Rc1/4(M2)

Automatic drain performance curve

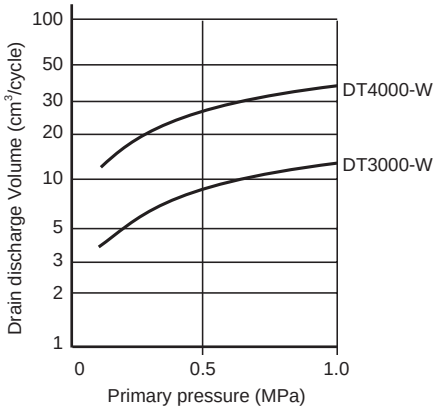

Internal structure and parts list

● Normally open (open at no pressure)
DT3000-W/DT4000-W

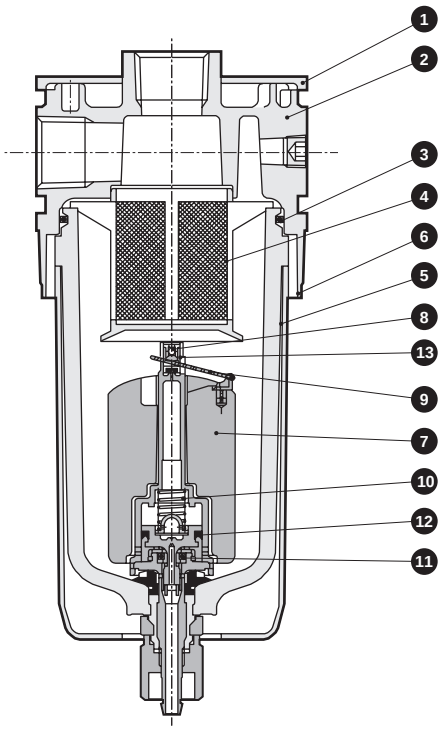

When pressure is not applied inside the bowl, the ❿ spring pushes down the ⓬ valve, keeping it away from the ⓫ stem packing. When 0.1 MPa or higher pressure is applied inside the bowl, the pressure applied to the ⓬ valve becomes larger than the force of the ❿ spring and pushes up the ⓬ valve, sealing it with the ⓫ stem packing.
When drain accumulates in the bowl, the ❼ float moves up and the ❾ float level arm pushes up the ⓭ orifice spring.
Then the ⓭ orifice spring snaps open the ❽ orifice seat assembly and leads the compressed air into the upper chamber of the ⓬ valve, making it pressurized. When the ⓬ valve is pushed down apart from the ⓫ stem packing, drain is discharged to air. After drain is discharged, the ❼ float moves down and the ❾ float level arm closes the ❽ orifice seat assembly. The compressed air that has kept the upper chamber of the ⓬ valve pressurized passes through the orifice of the ⓬ valve to be discharged to air. Then the pressure applied to the ⓬ valve from below becomes larger than the force of the ❿ spring and pushes up the ⓬ valve, sealing it with the ⓫ stem packing.

● Normally closed (closed at no pressure)
DT3010-W/DT4010-W

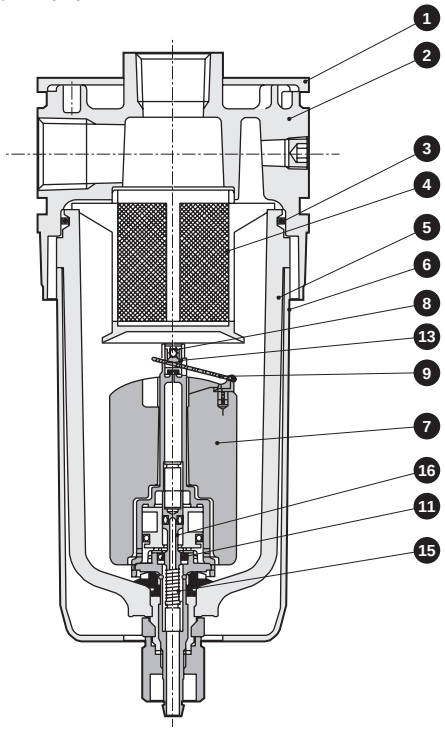

When pressure is not applied inside the bowl, the ⓯ spring pushes up the ⓰ valve, keeping it sealed with the ⓫ stem packing.
When 0.15 MPa or higher pressure is applied inside the bowl and drain accumulates, the ❼ float moves up and the ❾ float level arm pushes up the ⓭ orifice spring.
Then the ⓭ orifice spring snaps open the ❽ orifice seat assembly and leads the compressed air into the upper chamber of the ⓰ valve, making it pressurized. When the ⓰ valve is pushed down apart from the ⓫ stem packing, drain is discharged to air.
After drain is discharged, the ❼ float moves down and the ❾ float level arm closes the ❽ orifice seat assembly. The compressed air that has kept the upper chamber of the ⓰ valve pressurized passes through the orifice of the ⓰ valve to be discharged to air. Then the force of the ⓯ spring pushes up the ⓰ valve from below, sealing it with the ⓫ stem packing.

No.	Part name	Material	Model No.			
			DT3000-W	DT3010-W	DT4000-W	DT4010-W
1	Plate cover	ABS resin	-	-	-	-
2	Body	Aluminum alloy die-casting	-	-	-	-
3	O-ring	Special nitrile rubber	F3000-ORING	F3000-ORING	F4000-ORING	F4000-ORING
4	Screen	Polyacetal resin, polyester	DT3000-SCREEN	DT3000-SCREEN	DT4000-SCREEN	DT4000-SCREEN
5	Bowl assembly (including O-ring)	-	DT3000-W-BOWL	DT3010-W-BOWL	DT4000-W-BOWL	DT4010-W-BOWL
6	Bowl guard	Polyamide resin, steel	DT3000-W-BOWL-GUARD	DT3000-W-BOWL-GUARD	DT4000-W-BOWL-GUARD	DT4000-W-BOWL-GUARD

Dimensions

● DT3000-W/DT3010-W

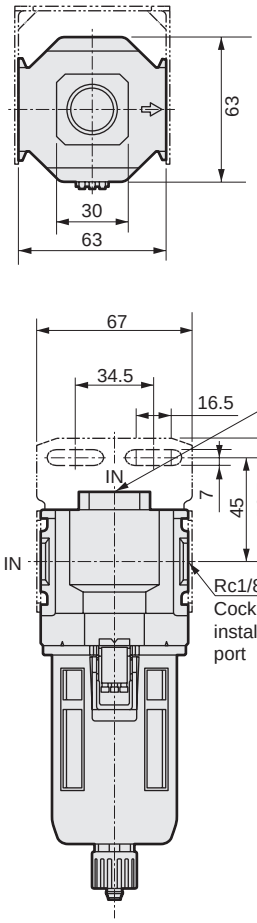

● DT4000-W/DT4010-W

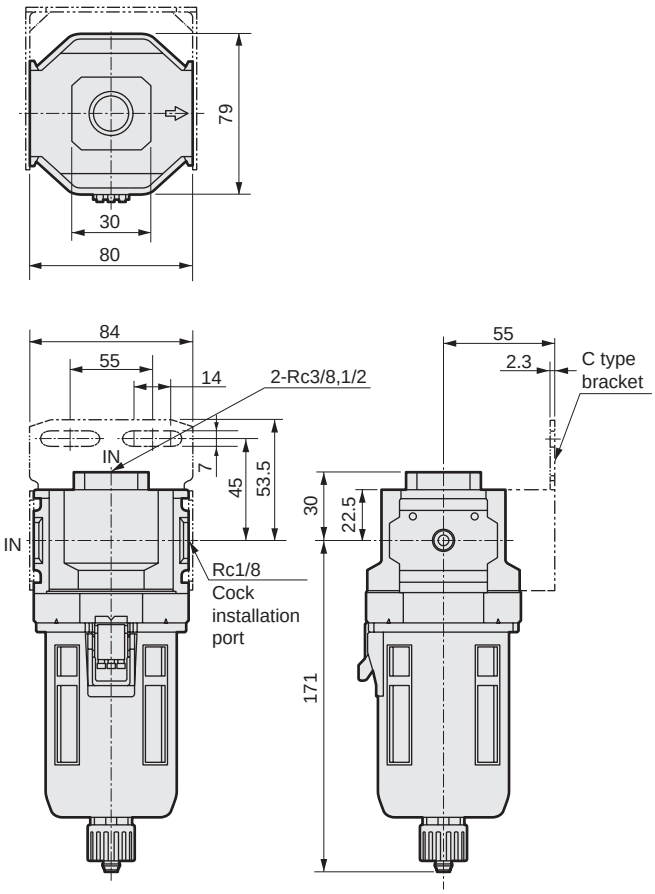

Note: A soft nylon tube of ø5.7 to ø6 bore size can be directly connected to the drain outlet.
Note: Keep 60 mm and over space below the bowl for maintenance.

Metal bowl specifications

● Option [M, M2]

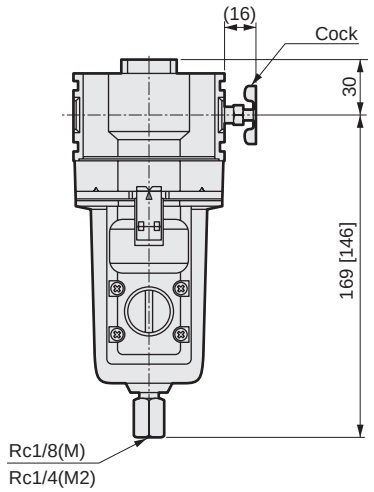

Note: Dimensions shown in [ ] are for DT3000-W.

Cock specifications

● Option [C]

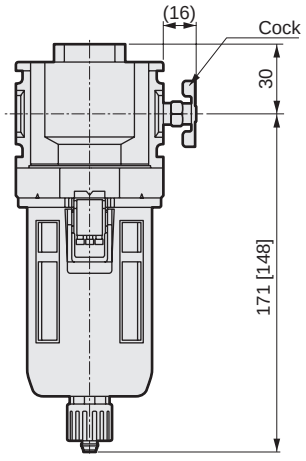

Note: Dimensions shown in [ ] are for DT3000-W.

MEMO

Safety Precautions

Be sure to read this section before use.
Refer to Intro Page 63 for general precautions
and refer to "⚠ Safety precautions" for detailed precautions for individual series.

Precautions for each model series and for individual products

Automatic drain DT3000/DT4000-W Series

⚠ CAUTION Mounting, installation and adjustment

1 Piping screw-in torque

Make sure that excessive torque is not applied to the body and pipes when piping.

	3000/4000 Series
Max. torque N·m	30

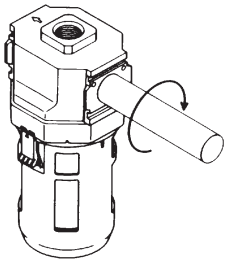

2 Piping, load torque

Avoid applying piping load or torque to the body or pipes.

	3000/4000 Series
Max. torque N·m	50

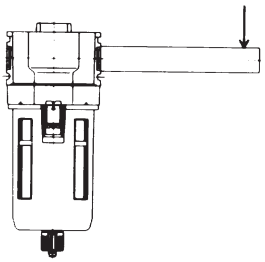

Use/maintenance

⚠ CAUTION

■ Avoid direct sunlight. Avoid installing this product where it is subject to direct ultraviolet.

■ As the bowl is made of polycarbonate, avoid exposing it to the chemicals on page 1913 or to an atmosphere containing them. A metal bowl is available if these chemicals must be used.

■ Use a household neutral detergent to wash the bowl, and then rinse with water.

■ Use an inner diameter of ø5.7 to 6.0 and piping of 5 m or less for the drain discharge section. Do not use vertical piping. Do not route it vertically. Pipe so that no lateral load is applied on the bowl.

■ Compatible compressor capacity is 0.75kW or more (discharge flow rate 90/min or more). (Normally open auto-drain only)

■ Prevent drainage exceeding the processing capability from entering the product. The product may malfunction if such a large amount of drain enters even temporarily.

■ The service life may be extremely short in an environment where a large amount of foreign matter enters the bowl. Periodically maintain the product and replace the bowl assembly.

■ The bowl assembly is a consumable part. Supports your working environment and frequencyfor periodic replacement.

■ Confirm that pressure has been released before mounting or removing the bowl and bowl guard.

■ Do not use hot air in that it may result in shorter service life or corrosion of the component.

■ Even when the drain piping is opened due to mounting restrictions, it can be discharged by the following procedure.
(1)Open the cock slightly to let the air bleed.
(2)Remove the cock and provide pressure equalization piping to the tank as shown in the figure below.

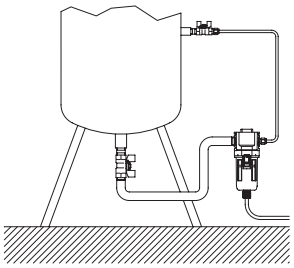

■ Repeated and sudden increase and decrease in pressure must be avoided because it could adversely affect the service life of the drain discharger. Moderate the pressure change in the circuit.

Cautions for attaching/detaching the bowl/bowl guard

⚠ CAUTION

■ Removing residual pressure

● To remove residual pressure, use the manual cock at the bottom. For a metal bowl, use the cock on the side. Remove the pressure applied inside the bowl and confirm that there is no residual pressure.

■ Attaching/detaching

● After removing residual pressure, press on the latch and push up and turn the bowl and bowl guard.

● Chemical resistance of plastic bowl

Use metal bowl in an atmosphere with the following chemicals.

Chemicals	Chem categ	Main products of chemicals	General applications	Polycarbonate bowl	Nylon bowl
Inorganic compound	Acids	Hydrochloric acid, sulfuric acid, fluorine, phosphoric acid, chromic acid, etc.	Acid metal wash, acid degreasing soln, coating treatment soln, etc.	×	×
	Alkalines	Alkalis such as caustic soda, caustic potash, calcium hydroxide, aqueous ammonia, sodium carbonate	Alkaline degreasing solution for metals	×	○
	Inorganic salts	Sodium sulfide, potassium nitrate, potassium bichromate, sodium sulfate, etc.		×	○
Organic compound	Aromatic HCs	Benzene, toluene, xylene, ethyl benzene, styrene, etc.	Contained in paint thinner (benzene, toluene, and xylene)	×	×
	Chlorinated aliphatic hydrocarbons	Methyl chloride, ethylene chloride, methylene chloride, acetylene chloride, chloroform, trichlene, perchlene, carbon tetrachloride	Organic solvent-based washing solution for metals (trichlene, perchlene, carbon tetrachloride, etc.)	×	○
	Cl Arom HCs	Chlorobenzene, dichlorobenzene, benzene hexachloride (B/H/C), etc.	Agricultural chemicals	×	○
	Petrol components	Solvent naphtha, gasoline, kerosene		×	○
	Alcohols	Methyl alcohol, ethyl alcohol, cyclohexanol, benzyl alcohol	Used as antifreezing agent	×	×
	Phenol	Carbolic acid, cresol, naphthol, etc.	Disinfectant solution	×	×
	Ethers	Methyl ether, methyl ethyl ether, ethyl ether	Additive of brake oil	×	○
	Ketones	Acetone, methyl ethyl ketone, cyclohexanone, acetophenone, etc.		×	×
	Carboxylic acids	Formic acid, acetic acid, butyl acid, acrylic acid, oxalic acid, phthalic acid, etc.	Dyes/oxalic acid for aluminum processing, phthalic acid for paint base	×	×
	Esters	Dimethyl phthalate (DMP), diethyl phthalate (DEP), dibutyl phthalate (DBP), dioctyl phthalate (DOP)	Lubricant, synthetic coolant, rust preventing agent additive plasticizer for synthetic resin	×	○
	Oxyacids	Glycol acid, lactic acid, malic acid, citric acid, tartaric acid		×	×
	Nitro compounds	Nitromethane, nitroethane, nitroethylene, nitrobenzene, etc.		×	○
	Amines	Methylamine, dimethylamine, ethylamine, aniline, acetanilide, etc.	Additive of brake oil	×	×
	Nitriles	Acetonitrile, acrylonitrile, benzonitrile, acetoisonitrile, etc.	Raw material for nitrile rubber	×	○

Automatic drain DB Series Energy saving & highly reliable

Two sensors prevent wasteful air consumption.

Control unit

● Electronic circuit with self-diagnosis function

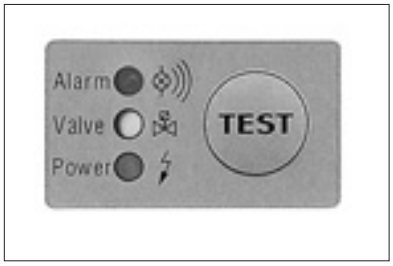

The electronic circuit with self-diagnosis function constantly monitors the discharge status displaying it with LEDs. (excluding DB3003D)

● Arbitrary discharge of drainage

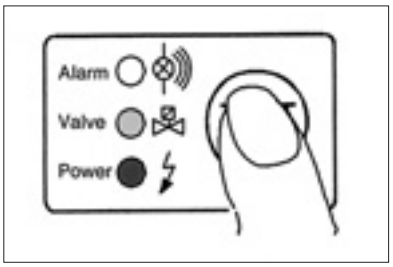

Drain can be discharged as desired by pressing the TEST button during operation check, etc. Added external test terminals. (excluding DB3003D)

● Simultaneous with alarm mode output, Self-avoidance operation is performed.



If drain discharge does not work normally, an alarm signal is output and self-recovery operation is repeated until the problem of the valve is removed. (excluding DB3003D)

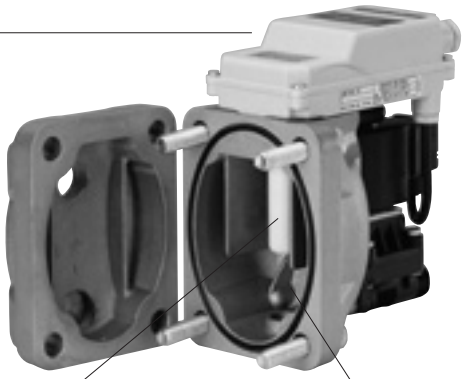

● Easy wiring

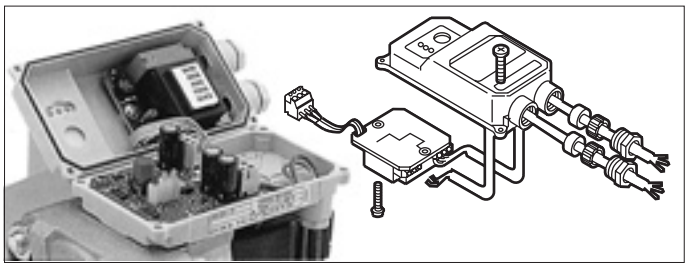

The power supply and control sections are compactly stored. The power supply section can be detached allowing you to connect the pipes easily. (excluding DB3003D)

Level sensor

● Highly reliable level sensor

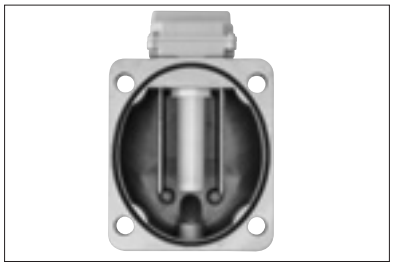

The sensor is protected by the resin cover. Stable performance is not affected by the drain quality.

Tank

● Easy to clean inside the tank

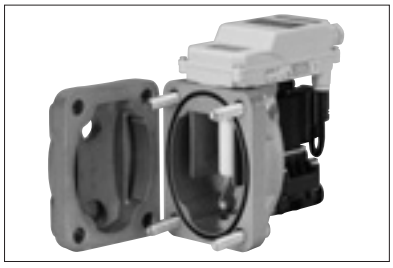

You can access inside the tank easily by simply removing four bolts without disconnecting the inlet pipe. (DB1024/3024/1090D/3090D)

● Oil-prohibited

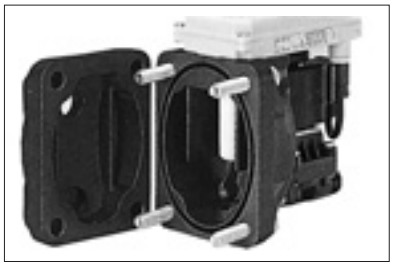

Rust proof treatment on the inner and outer surfaces of the housing. (DB3000 Series)

● Efficient use of compressed air

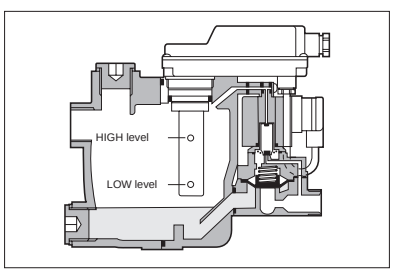

HIGH and LOW level sensors discharge drainage only, preventing wasteful air consumption. (DB1090D/3090D/3700)

● Port options that can be selected according to the installation condition

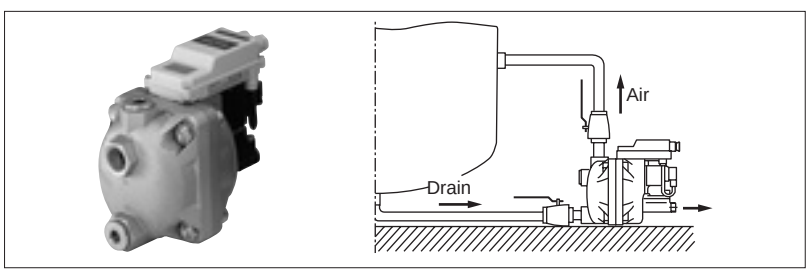

If the inlet pipe is connected to the bottom part and the amount of drain is large, the pipe at the top can be used as an air vent. (DB1024/3024/1090D/3090D/3700)

Automatic drain series map

Automatic drain DB Series						
Compressor RO (kW)		11 15 22	37	55 75	120 150	300 450 900
Outlet flow rate m^3/min (ANR)		1	5	10	50	100 500 1000
Compatible compressor	No-lubrication	DB3003D	DB3006E	DB3024	DB3090D	DB3700
	Lubrication		DB1006E	DB1024	DB1090D	

Drain sensor DBS1006

Operational explanation

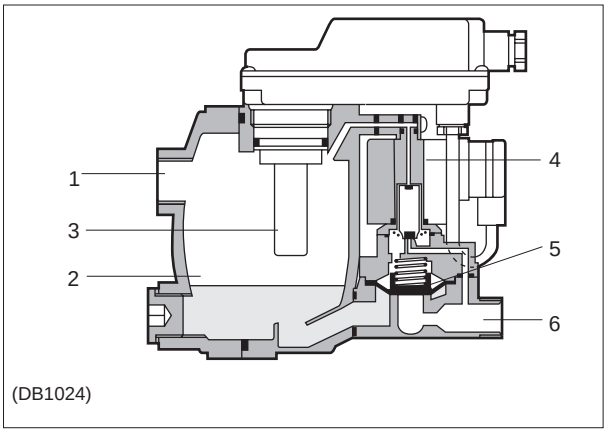

(DB1024)

● DB Series single sensor (DB3003D, DB1006E/3006E, DB1024/3024)

Drain passing the inlet pipe (1) accumulates in the tank (2). The diaphragm valve (5) is closed by air pressure inside the tank. The level sensor (3) is constantly monitoring the drain level.
When the level sensor (3) detects that the tank (2) is full of drain, it activates the pilot valve (4). This opens the diaphragm valve (5) letting drain flow out of the outlet (6).
The valve open time is controlled by the timer and air leakage can be minimized in various conditions. When drain cannot be discharged, the automatic drain enters the alarm mode in approximately 60 seconds where the red LED flashes and an alarm signal is output. In the alarm mode, the automatic drain tries self-recovery by opening the valve once in approximately four minutes.

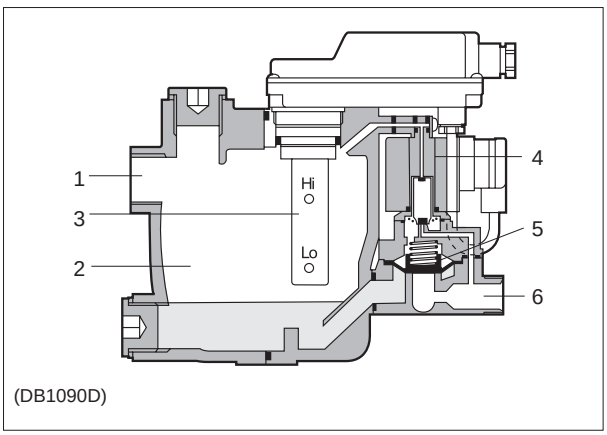

(DB1090D)

● DB Series double sensor (DB1090D/3090D, DB3700)

Drain passing the inlet pipe (1) accumulates in the tank (2). The diaphragm valve (5) is closed by air pressure inside the tank. The level sensor (3) is constantly monitoring the drain level.
When the level sensor (3) detects that the tank (2) is filled with drain up to the high level (Hi) of the level sensor (3), it activates the pilot valve (4). This opens the diaphragm valve (5) letting drain flow out of the outlet (6).
The automatic drain system determines the accurate valve open time by calculating it from the drop rate of the drain level. The valve is closed completely to prevent leakage before the compressed air starts leaking.
When drain cannot be discharged, the automatic drain enters the alarm mode in approximately 60 seconds where the red LED flashes and an alarm signal is output. In the alarm mode, the automatic drain tries self-recovery by opening the valve once in approximately four minutes.

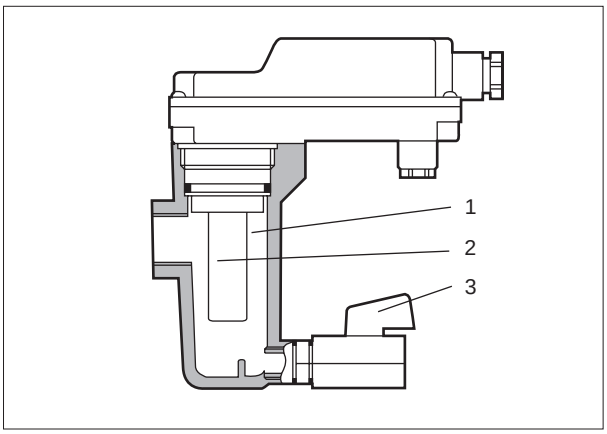

● DBS1006

Drain accumulates in the tank (1).
The level sensor (2) is constantly monitoring the drain level.
When the level sensor (2) detects that the tank (1) is full of drain, an alarm is output, the red LED flashes and an alarm signal is output (alarm mode). The drain cock (3) is normally kept closed. In the alarm mode, accumulated drain can be manually discharged from the drain cock (3). After discharge, the alarm mode ends and the system returns to the normal status.
(Drain is not discharged automatically since this product is not a drain discharger.)

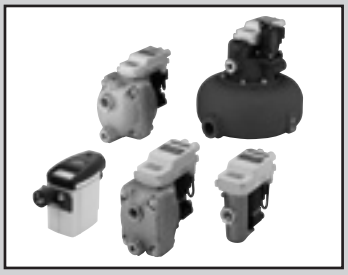

Automatic drain

DB1000/DB3000 Series

Drain discharger with highly reliable level sensor.

- Port size: G1/2" to G1"
  (for 2.5 to 1000 m^3/min (ANR) air compressor discharge flow rate)

JIS symbol 

CAD

Specifications

Item		DB3003D-15	DB1006E-15 -200 VAC	DB3006E-15 -200 VAC	DB1024-15 -200 VAC	DB3024-15 -200 VAC	DB1090D-20 -200 VAC	DB3090D-20 -200 VAC	DB3700-20 -200 VAC
Port size	Drain inlet	G1/2"	G1/2"		G1/2"		G3/4″		G3/4", G1"
	Drain outlet	8 mm fitting, G1/4"	10 mm hose fitting or G3/8"		13 mm hose fitting or G1/2"		13 mm hose fitting or G1/2"		G1/2"
Processing air flow rate of applicable air compressor m^3/min(ANR)		2.5	4.5		20		90		1000
Processing air flow rate of applicable air dryer m^3/min(ANR)		5	9		40		180		2000
[Reference] Capacity of compressor for the corresponding air dryer. (kW)		22	55		240		900		7000
Working conditions	Working fluid	Drain contained in compressed air							
	Ambient temperature °C	1 to 60							
	Working pressure MPa	0.08 to 1.6							
Electro specs	Power supply	Single phase 95 VAC to 240 VAC 50/60 Hz	Single phase 200 VAC 50/60 Hz						
	Max. power consumption	3VA	8.0VA						
Alarm contact capacity		-	max. 250 VAC/1 A, max. 30 VDC/1 A, min. 5 VDC/10 mA						
Degree of protection		IP67	IP65						
Weight kg		0.8	0.8		2.0		2.9		5.9
Applicable air compressor type		No-lubrication	Lubrication	No-lubrication	Lubrication	No-lubrication	Lubrication	No-lubrication	No-lubrication

*1: G means parallel female thread that can be connected with an R thread.
*2: Use a hose fitting or G1/4" for the drain outlet of DB3003D. G1/4" is a parallel male thread.
*3: Use a hose fitting or G3/8" for the drain outlet of DB1006E/3006E. G3/8" is a parallel male thread.
*4: Use a hose fitting or G1/2" for the drain outlet of DB1024/3024 and DB1090D/3090D. G1/2" is a parallel male thread.
*5: Use G3/4" or G1" for the drain inlet of DB3700.
*6: DB3000 Series can be used for lubrication compressor.

How to order

DB 1 090 – 20 – AC200V

Ⓐ Application
Ⓑ Capacity category
Ⓒ Inlet port size
Ⓓ Voltage *2

Code	Description
Ⓐ Application	
1	For lubrication compressor
3	For no-lubrication compressor
Ⓑ Capacity category	
003D	22 kW or less
006E	55 kW or less
024	240 kW or less
090D	900 kW or less
700	7000 kW or less
Ⓒ Inlet port size	
15	G1/2"
20	G3/4″
Ⓓ Voltage	
200 VAC	

Model No.Note on selection

*1: Capacity code is the capacity of air compressor for the corresponding air dryer.
*2: Cannot be selected for the Ⓑ Capacity category “003D”.

Dimensions

● DB3003D-15

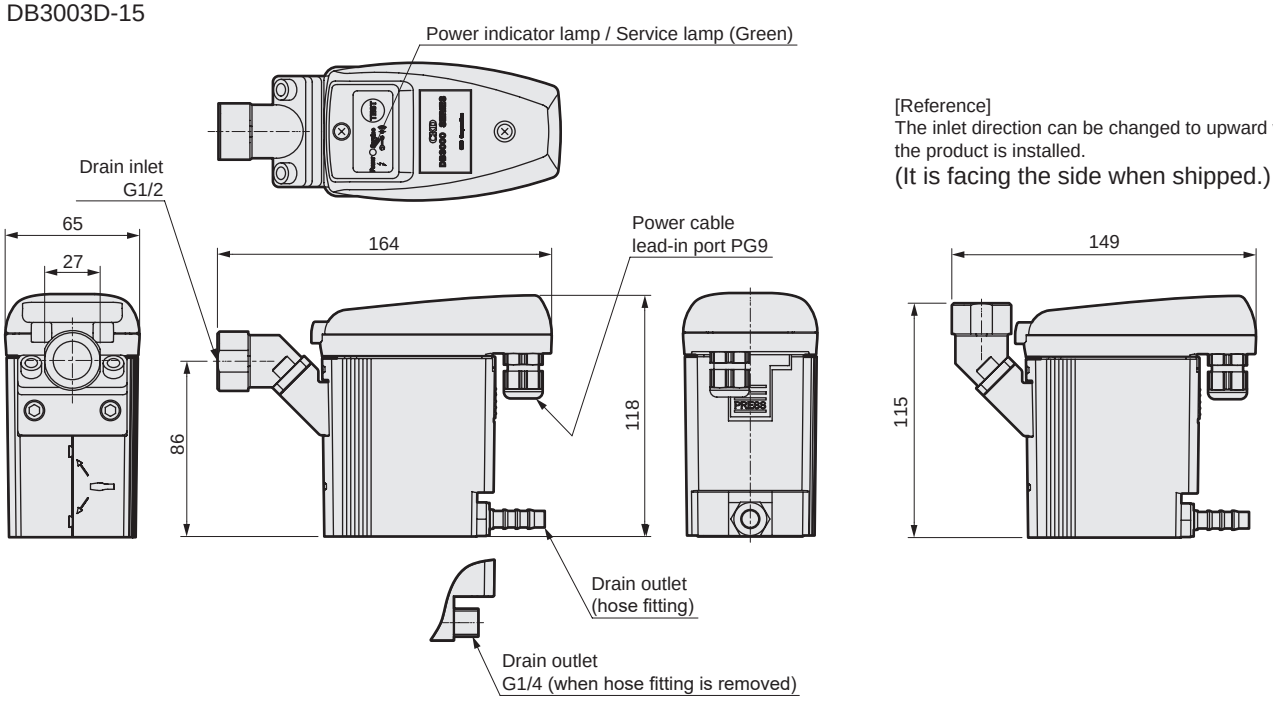

● DB1006E-15/DB3006E-15

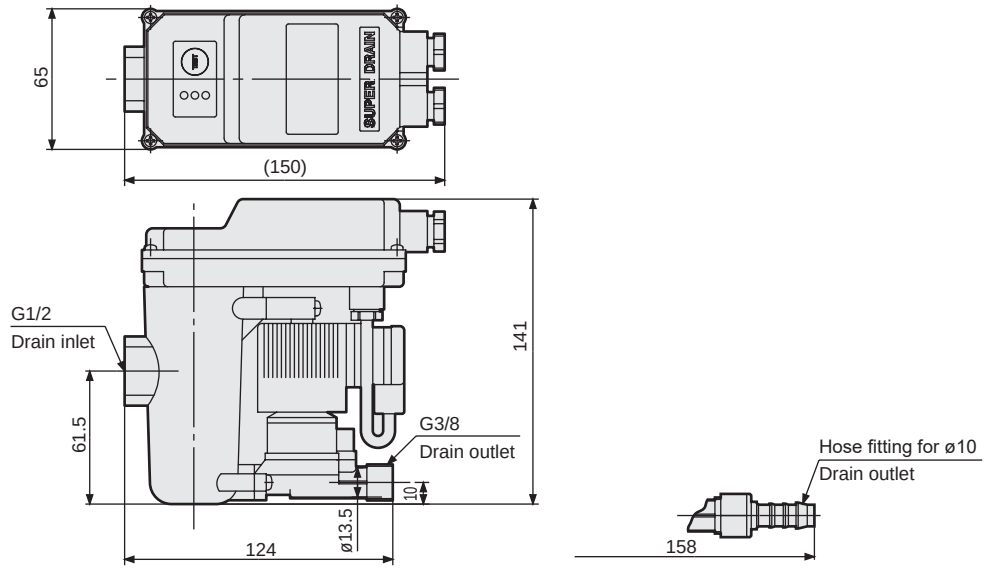

● DB1024-15/DB3024-15

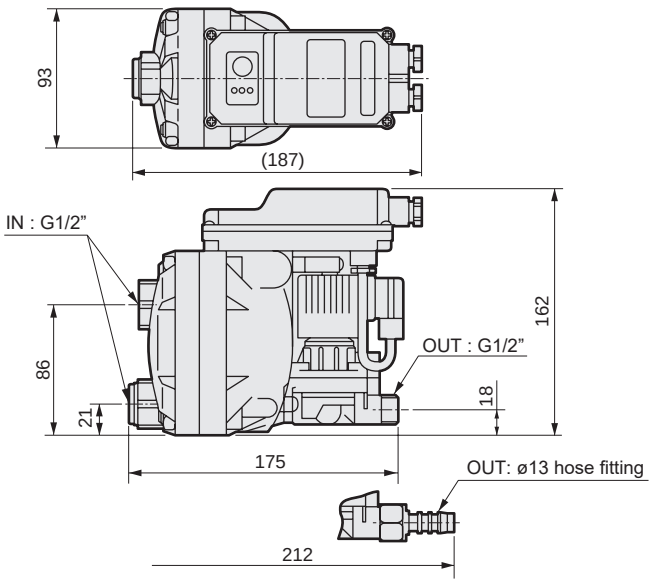

Dimensions CAD

● DB1090D-20/DB3090D-20

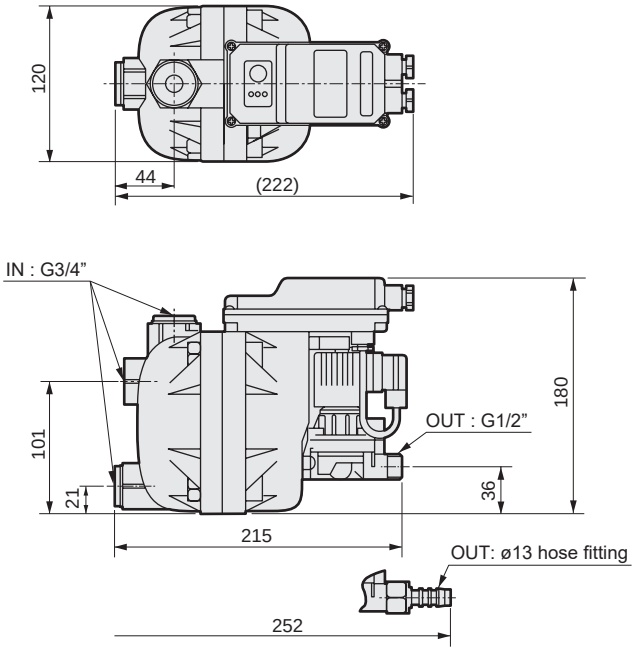

● DB3700-20

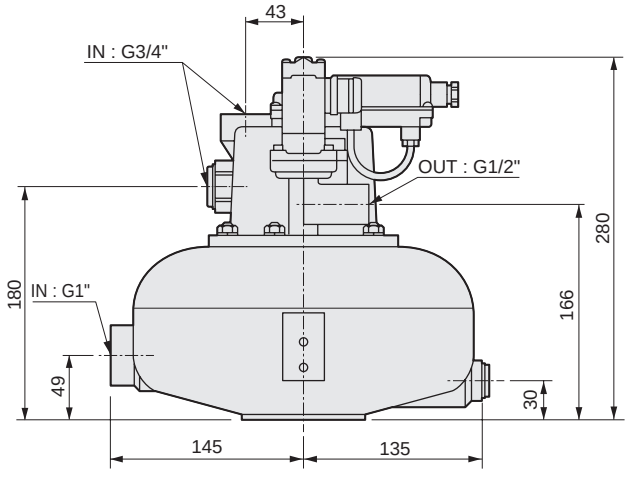



Drain sensor

DBS1006 Series

High-reliability level sensor detects the entry of drainage into the pneumatic circuit.

● Port size: G1/2"

CAD

Specifications

Item		DBS1006-15-AC200V
Port size	Drain inlet	G1/2"
	Drain outlet port	G1/4″
Working conditions	Working fluid	Drain contained in compressed air
	Ambient temperature °C	1 to 60
	Working pressure MPa	0 to 1.6
Electro specs	Power supply	Single phase 200 VAC 50/60 Hz
	Max. power consumption	8.0VA
Alarm contact capacity		max. 250 VAC/1 A, max. 30 VDC/1 A, min. 5 VDC/10 mA
Degree of protection		IP65
Weight kg		0.65

Applications

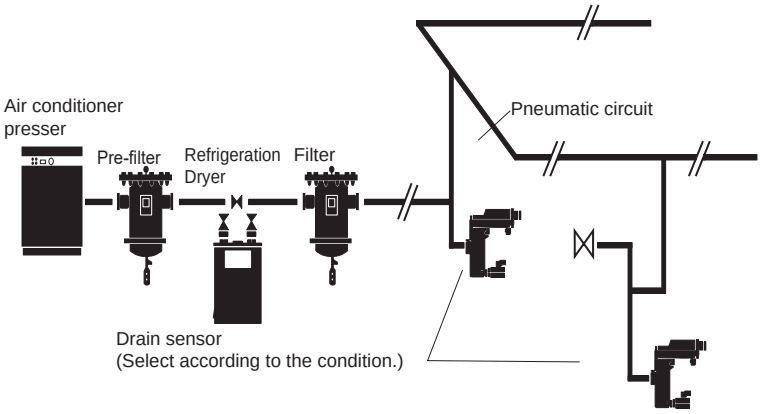

dimensions CAD

● DBS1006-15

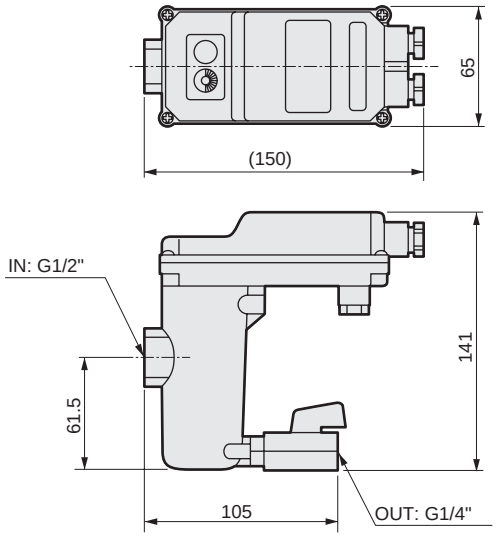

Safety Precautions

Be sure to read this section before use.
Refer to Intro Page 63 for general precautions.

Product-specific cautions: Automatic drain DB Series

Design/selection

⚠ CAUTION

- Avoid direct sunlight and rainwater. The resin parts, etc., could deteriorate and break.
- Do not use in locations with corrosive gases.
- Use this product within the operating ambient temperature.
- Do not use in locations at risk of freezing. The accumulated drainage could freeze and damage the product.
- Do not use in hazardous locations (possibly explosive atmospheres, etc.).
- Do not use this product in an ozone generating environment.
- Do not use the product with a refrigeration air dryer, water cooling cooler or similar devices with rapid air cooling to below the ambient temperature.

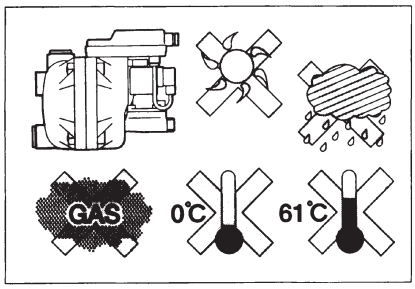

Mounting, installation and adjustment

⚠ CAUTION

- Do not step onto the body of this unit. Doing so may damage the upper resin cover.
- Use appropriate pipe material for the working pressure. Using inappropriate pipe material may cause damage of the pipe resulting in a blast of drain or air.
- Fix the inlet pipe with a wrench. Fixing any other part may result in damage of the part.
- The drain inlet pipe should be 1/2” and over and continuously slope downward. Note that riser piping must be avoided. Otherwise drainage will not enter to be discharged.
- To pass drain from the bottom inlet, provide an equalization piping on the top of the product. Otherwise drain will not enter to be discharged.
- Do not install a strainer to the drain inlet pipe. Doing so may cause a clogged strainer preventing drain from entering.
- Use a ball valve or gate valve as a stop valve. Do not use any other valves. The ball valve should be a full bore type. Using any other valves than those specified may block the drain path preventing drainage from entering.
- As drainage is discharged with pressure, securely fix the piping at the drain port so that drainage does not splatter.
- If the drain outlet piping slopes upward, the min. working pressure will increase by 0.01 MPa per 1 m. Please be careful. Make sure that the rising piping does not exceed 5 m.

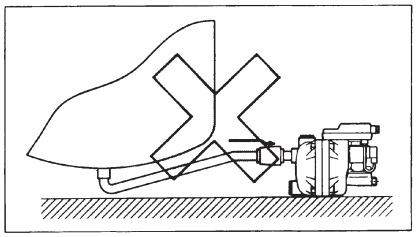

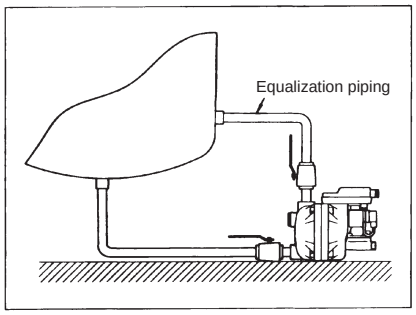

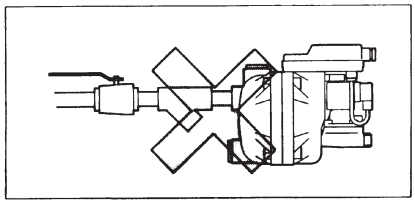

During use/maintenance

⚠ CAUTION

- Check the product nameplate and use within ±10% of the rated voltage.
- Use this product within working pressure range.
- The drain outlet closes when the power is OFF, so drainage will not be discharged. Drainage will be discharged only when power is ON, so leave the power ON at all times during use.
- Do not use test buttons or test signals with external inputs to continuously discharge drain. Otherwise an alarm will be output.
- Check whether the Power indicator is ON.
- Check whether the Alarm indicator is OFF.
- Press the TEST button, and confirm that drainage is discharged.
- Maintenance and repairs must always be done in an unpressurized state with the power turned OFF.
- Use only genuine consumable parts.
- The “Power” lamp of the DB3003D blinks after two years or 1 million operation cycles. Refer to the instruction manual of the DB3003D to replace the service unit.

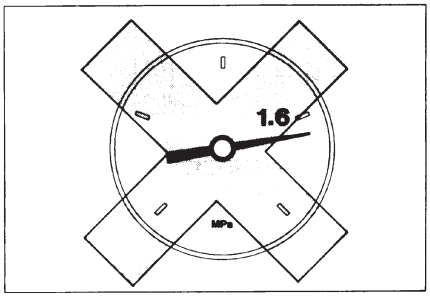

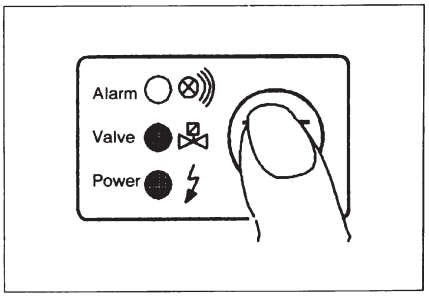



Drain discharger
Heavy duty drain

5100-4C Series

Float drain (NC: no discharge when not pressurized).
Ideal for circuits generating a lot of moisture.

● Port size: Rc1/2

JIS symbol 

RoHS

Specifications

1 MPa = 10 bar

Item	5100-4C
Max. working pressure MPa	1.0 (≈150 psi)
Proof pressure MPa	1.5 (≈210 psi)
Fluid temperature (ambient) °C	5 (41°F) to 65 (149°F)
Min. working pressure MPa	0.069 (≈10 psi)
Drain discharge cm^3	170/time
Port size	Rc1/2
Weight kg	1.9
Bowl guard	Standard equipment

How to order

● Heavy duty drain

5100 – 4C – Z

Ⓐ Model No.

Ⓑ Port size

Ⓒ Option

Code		Description
Ⓑ Port size		
4C		Rc1/2
Ⓒ Option		
Bowl material	Blank	Polycarbonate bowl
	Z	Nylon bowl
	M	Metal bowl
	MG	Metal bowl with gauge

Precautions for model No. selection

*1: If port size NPT thread is required, do not indicate nominal size C. (Example) 5100-4

Internal structure and parts list

● 5100-4C

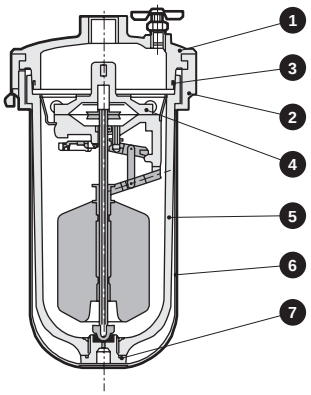

No.	Main part	Material
1	Cover	Zinc die casting
2	Clamp ring	Zinc die casting

Parts list

No.	Part name	Material	Model No.
3	O-ring	Special nitrile rubber	1138-ORING
4	Drain unit assembly	-	1326-DRAIN-UNIT
5	Bowl assembly	Polycarbonate	5100-BOWL
6	Bowl guard	Steel	1138-BOWL-GUARD
7	Drain seat assembly	Aluminum alloy, nitrile rubber	A1338-DRAIN-SEAT

Dimensions CAD

● 5100-4C

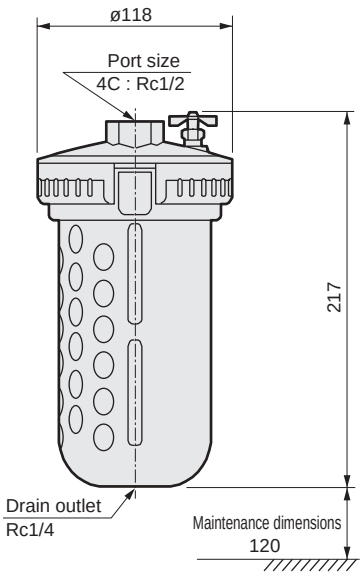

Safety precautions

■ Use/maintenance

● Note that the bowl may be difficult to remove at times. When it is hard to remove, apply a strong force. (Before removing the bowl, check the looseness by applying force to the side of the lower part of the bowl.)

Systems

Page

Components for clean room specifications (New Fine System) — Ending Page 2

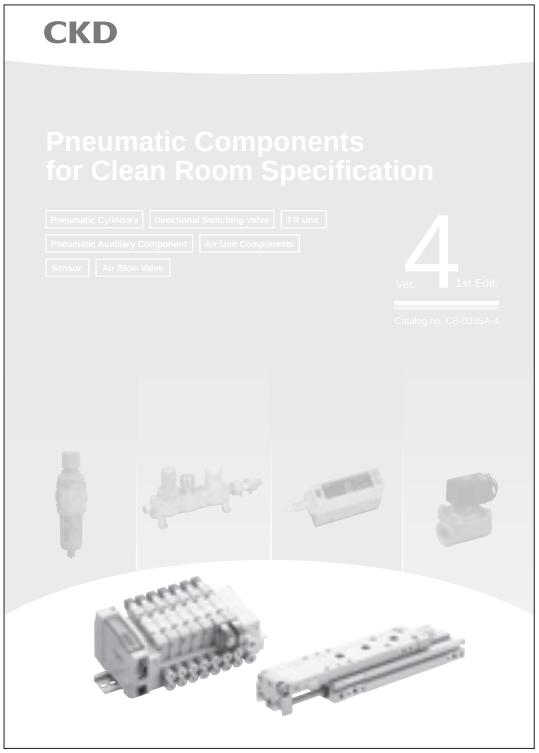

Components for clean room specifications

Catalog No.CB-033SA

Satisfies the various levels of clean room cleanliness in a wide range of industries

● Reliably producing high cleanliness air

Clean blow system model circuit

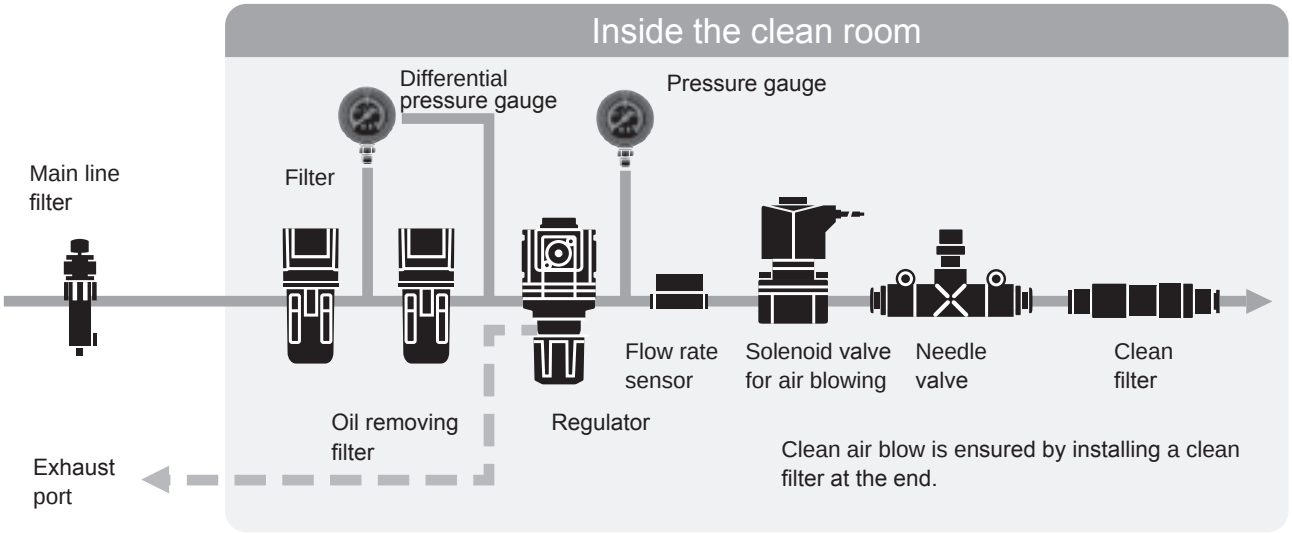

Zero particle generation with vacuum treatment and exhaust port

Air-driven actuator system circuit structure

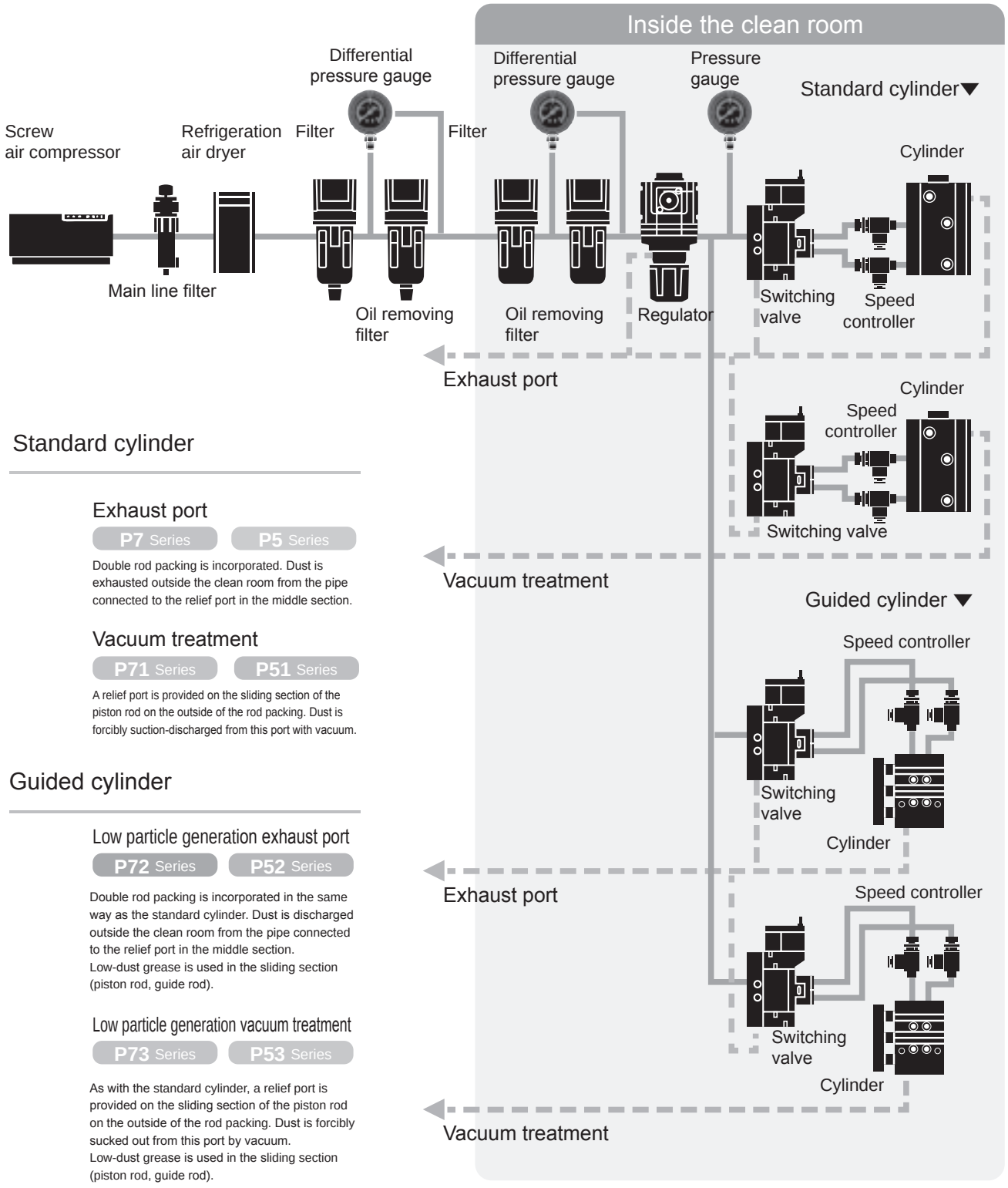

Standard cylinder

Exhaust port

P7 Series P5 Series

Double rod packing is incorporated. Dust is exhausted outside the clean room from the pipe connected to the relief port in the middle section.

Vacuum treatment

P71 Series P51 Series

A relief port is provided on the sliding section of the piston rod on the outside of the rod packing. Dust is forcibly suction-discharged from this port with vacuum.

Guided cylinder

Low particle generation exhaust port

P72 Series P52 Series

Double rod packing is incorporated in the same way as the standard cylinder. Dust is discharged outside the clean room from the pipe connected to the relief port in the middle section.
Low-dust grease is used in the sliding section (piston rod, guide rod).

Low particle generation vacuum treatment

P73 Series P53 Series

As with the standard cylinder, a relief port is provided on the sliding section of the piston rod on the outside of the rod packing. Dust is forcibly sucked out from this port by vacuum.
Low-dust grease is used in the sliding section (piston rod, guide rod).

Ozone proof components

Page

Influence of ozone — Ending Page 6

Ozone proof component selection range — Ending Page 7

Support by product group — Ending Page 8

Plant environments easily affected by ozone

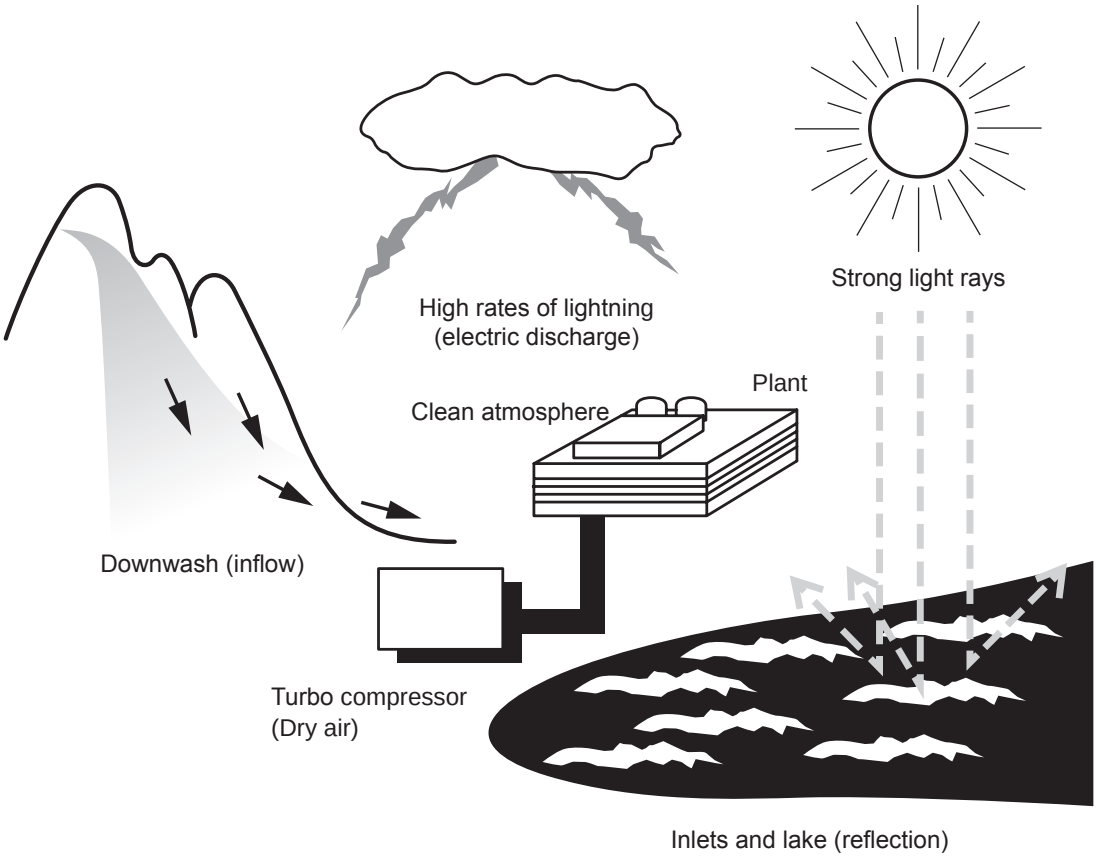

Pneumatic components affected by ozone

Diaphragm and valve seat of regulator

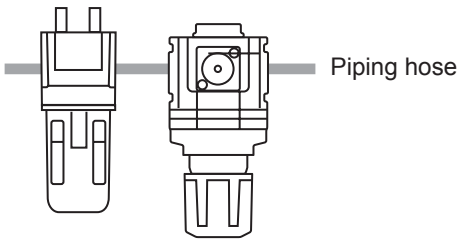

Repeated stress accelerates rubber deterioration

Valve seat of air blow valve

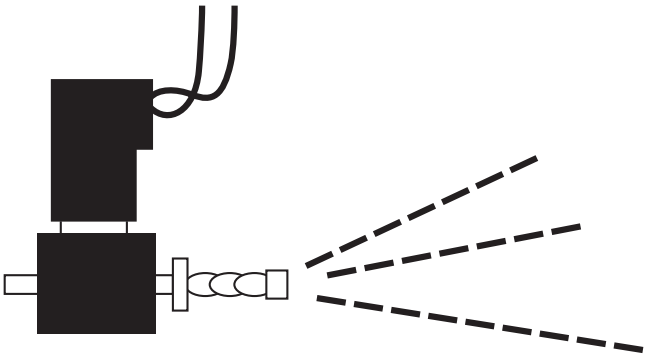

High air flow speed at orifice

Ozone proof component selection range

A typical pneumatic component system consists of the following devices.

Devices in [ ] require ozone countermeasures.

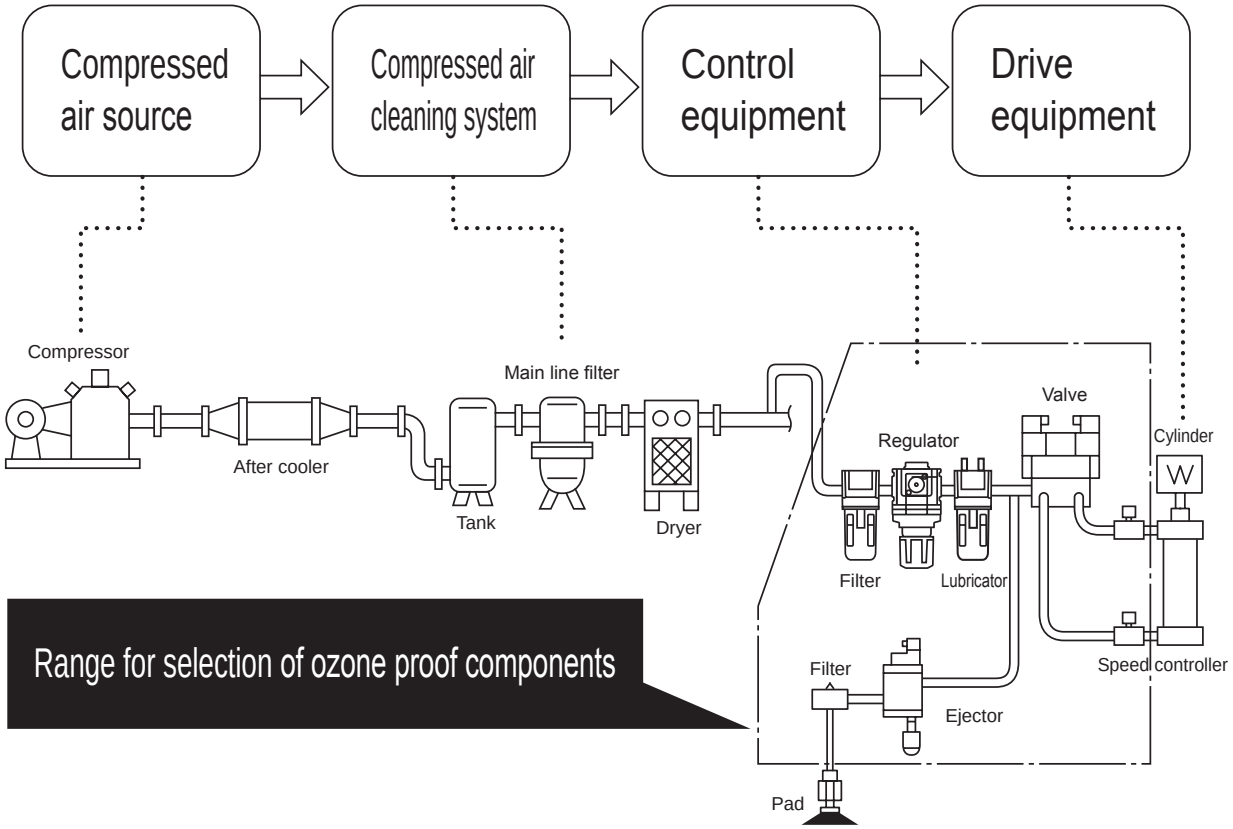

⚠ Safety precautions

Ozone-proof components use fluoro rubber or hydrogenated nitrile rubber for rubber parts.
Therefore, special working environments and conditions that differ from the standard products must be considered when evaluating performance and service life.

Support by product group

1. Pneumatic cylinders

Available as standard specifications.

2. Pneumatic valves

Pneumatic valves are available as indicated below.

● Option
Ozone-proof specifications are available as an option.

● -P11 compatible
Parts with ozone-proof specifications are available by adding -P11 at the end of the model No. (Made-to-order product)

Ozone countermeasures

The material of the rubber parts differs from standard products.
(Dimensions are the same as for standard products.)

Option compatible model

Series		Model No.	How to order
4G Series	4, 5-port valve	4G$^{A}_{B}$* M4G$^{A}_{B}$* MN4G$^{A}_{B}$*	Selectable with option code A. Example) Single unit [Model No.] [Solenoid position] - [Port size] - [Electrical connections] [Option] A - [Rated voltage] Example) Manifold [Model No.] [Solenoid position] - [Port size] - [Electrical connections] [Option] A - [Station No.] - [Rated voltage]
	3-port valve	3G$^{A}_{B}$* M3G$^{A}_{B}$* MN3G$^{A}_{B}$*	
W4G2 Series	4, 5-port valve	W4GB2* MW4G$^{B}_{2}$2*	
	3-port valve	MW3GA2*	
MN4E0 Series	4-port valve	MN4E0*	
	3-port valve	MN3E0*	

-P11 compatible model

Series		Model No.	How to order
4S0 Series	5-port valve	4S$^{A}_{B}$0* M4S$^{A}_{B}$0*	Available by adding -P11 at the end of the model No. (Made-to-order product) Example) Discrete [Model No.] [Solenoid position] - [Port size] - [Manual operating device] [Electrical connections] [Option] - [Rated voltage] -P11 Example) Manifold [Model No.] [Solenoid position] - [Port size] - [Manual operating device] [Electrical connections] [Option] - [Station No.] - [Rated voltage] - P11
MN4S0 Series	4-port valve	MN4S0* MT4S0*	
	3-port valve	MN3S0* MT3S0*	
4K Series	4, 5-port valve	4K$^{A}_{B}$* M4K$^{A}_{B}$* MN4KB*	
	3-port valve	3KA* M3KA*	
3M Series	3-port valve	3M$^{A}_{B}$0* M3M$^{A}_{B}$0*	
3P Series	3-port valve	3P$^{A}_{B}$* M3P$^{A}_{B}$*	

3. Refining and pressure adjusting components (F.R.L.)

Refer to the “How to order” of each model (Ending Pages 10 to 19).

4. Pneumatic auxiliary components

Pneumatic auxiliary components are available as follows:

● Option
Ozone-proof specifications are available as an option.

● -P11 compatible
Parts with ozone-proof specifications are available by adding -P11 at the end of the model No. (Made-to-order product)

Ozone countermeasures

The material of the rubber parts differs from standard products.
(Dimensions are the same as the standard products.)

Option compatible model

Series	Model No.	How to order
Speed controller	SC1	Selectable with option code “X1”.
Medium bore size		SC1-[Piping port size]-X1

-P11 compatible model

Series	Model No.	How to order
Speed controller **Direct piping/elbow**	SC3R	SC3R - [Piping port size] - [Option] P11
Speed controller **Elbow with push-in fitting**	SC3W	SC3W - [Piping size] - [Compatible tube O.D.] - [Option] P11
Miniature fitting	F	F[Shape] [Flow path shape] [Compatible tube] - [Piping size] - P11
Fitting	GW	GW [Shape] [Compatible tube] - [Piping size] - [Other combination] - P11
Fitting stainless steel	ZW	ZW-[Shape] [Compatible tube O.D.]-[Piping size]-P11

* The following models are available as standard.
Silencer SLM/SLW Series, stainless steel fitting ZJ Series, tube F.U.KX

5. Sensors

* The following models are available as standard.
· Mechanical pressure switch (reed small pressure switch) P*100-W Series
· Pressure switch P4000-W Series

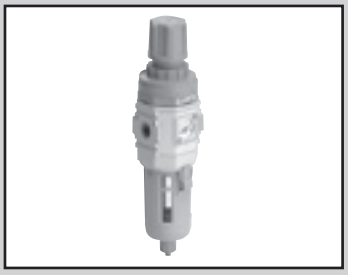

Filter regulator Standard White Series: Ozone proof

W1000-W/W3000-W W4000-W/W8000-W-P11 Series

Fluoro rubber and hydrogenated nitrile rubber, etc., used for rubber part materials.

● Port size: Rc1/8 to Rc1

JIS symbol 

RoHS CAD

How to order

W1000 - 6 ( ) - W - Z P11 - ( ) - A6W G49P

- Ⓐ Model No.
- Ⓑ Port size
- Ozone-proof specifications
- Ⓒ Port thread
- Ⓓ Option *2 *3 *4 *5 *6 * Refer to page 28 for the explanation of the option.
- Ⓔ Display unit
- Ⓕ Pipe adaptor set (included) *7 *8
- Ⓖ Other attachments

Code		Description	Ⓐ Model No. W1000	W3000	W4000	W8000
Ⓑ Port size						
6		1/8	●			
8		1/4	●	●	●	
10		3/8		●	●	
15		1/2			●	
20		3/4				●
25		1				●
Ⓒ Port thread		*9				
Blank		Rc thread	●	●	●	●
N		NPT thread	●	●	●	●
G		G thread	●	●	●	●
Ⓓ Option						
Drain discharge	**Blank**	Manual drain cock	●	●	●	●
	F	Auto-drain manual override (NO)		●	●	●
	F1	Auto-drain manual override (NC)		●	●	●
	FF	Large auto-drain with manual override (NO)				●
	FF1	Large auto-drain with manual override (NC)				●
Bowl material	**Blank**	Polycarbonate bowl	●	●	●	●
	Z	Nylon bowl	●	●	●	●
	M	Metal bowl		●	●	●
Element	**Blank**	5 µm	●	●	●	●
	Y	0.3 µm (submicron)		●	●	●
Pressure range	**Blank**	0.05 to 0.85 MPa	●	●	●	●
	L	0.05 to 0.35 MPa	●	●	●	●
Pressure relief	**Blank**	With relief mechanism	●	●	●	●
	N	Non-relief	●	●	●	●
Pressure gauge	**Blank**	With standard pressure gauge (G401)	●	●	●	●
	T	No pressure gauge (gauge port (1/4) is assembled sealed)	●	●	●	●
	T8	Pressure gauge ready option (gauge port (1/4) is left open)	●	●	●	●
X1		IN/OUT reverse flow (right to left)	●	●	●	●
Ⓔ Display unit						
Blank		MPa display (Rc thread), psi display (NPT thread), bar display (G thread)	●	●	●	●
J1		MPa display (NPT, G thread)	●	●	●	●
Ⓕ Pipe adaptor set (included)		*10				
Blank		No included products	●	●	●	●
A6*W		1/8 pipe adaptor set	●			
A8*W		1/4 pipe adaptor set	●	●	●	
A10*W		3/8 pipe adaptor set	●	●	●	
A15*W		1/2 pipe adaptor set		●	●	
A20*W		3/4 pipe adaptor set			●	●
A25*W		1 pipe adaptor set				●
A32*W		1 1/4 pipe adaptor set				●
*** Adaptor thread**						
Blank		Rc thread	●	●	●	●
N		NPT thread	●	●	●	●
G		G thread	●	●	●	●
Ⓖ Other attachments		*11				
Blank		No included products	●	●	●	●
BW		C type bracket	●	●	●	●
B3W		L type bracket	●	●	●	
G49P		Pressure gauge: G49D-8-P10 (L: G49D-8-P04)	●	●	●	●
G59P		Pressure gauge: G59D-8-P10 (L: G59D-8-P04)	●	●	●	●
G40P		Pressure gauge: G40D-8-P10 (L: G40D-8-P04)	●	●	●	●

⚠ Precautions for model No. selection

*1: Refer to pages 90 to 91 for specifications and attachments.
*2: Select options for the drainage, bowl material, element and regulator.
When selecting options for several items, list options in order from the top.
*3: If "L" is selected for pressure range option, a low-pressure gauge (0 to 0.4 MPa) is used.
*4: In the case of option code "F", the min. working pressure of the auto-drain is 0.1 MPa.
Air is purged with initial drain until pressure reaches 0.1 MPa.
*5: In the case of option code "F1", the min. working pressure of the auto-drain is 0.15 MPa.
*6: For "T", a gauge plug is assembled instead of a pressure gauge.
*7: Pipe adaptor set A*00-**-W is enclosed.
*8: The pipe adaptor set and C type bracket cannot be used together.
*9: G threads and NPT threads are available for IN, OUT, gauge port and drain outlet (metal bowl with auto-drain).
*10: The adaptor port size can be selected from Rc, NPT or G.
Blank: Rc thread, N: NPT thread, G: G thread.
(Example) A8G
*11: If NPT is selected for ⓒPort thread, an NPT pressure gauge is supplied. If Rc or G thread is selected, an R thread pressure gauge is supplied.

Dimensions

Same as standard products. Refer to pages 94 to 96.



Reverse filter and regulator Standard White Series: Ozone proof

W1100-W/W3100-W W4100-W/W8100-W-P11 Series

Fluoro rubber and hydrogenated nitrile rubber, etc., used for rubber part materials.

● Port size: Rc1/8 to Rc1

JIS symbol 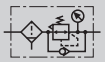

RoHS CAD

How to order

W1000 - 6 ( ) - W - Z P11 - ( ) - A6W G49P

- Ⓐ Model No.
- Ⓑ Port size
- Ozone-proof specifications
- Ⓒ Port thread
- Ⓓ Option
  - *2
  - *3
  - *4
  - *5
  - *6
  - *7
  - * Refer to page 28 for the explanation of the option.
- Ⓔ Display unit
- Ⓕ Pipe adaptor set (included)
  - *8
  - *9
- Ⓖ Other attachments

Code		Description	Ⓐ Model No. W1100	W3100	W4100	W8100
Ⓑ Port size						
6		1/8	●			
8		1/4	●	●	●	
10		3/8		●	●	
15		1/2			●	
20		3/4				●
25		1				●
Ⓒ Port thread		*10				
Blank		Rc thread	●	●	●	●
N		NPT thread	●	●	●	●
G		G thread	●	●	●	●
Ⓓ Option						
Drain discharge	**Blank**	Manual drain cock	●	●	●	●
	F	Auto-drain manual override (NO)		●	●	●
	F1	Auto-drain manual override (NC)		●	●	●
	FF	Large auto-drain with manual override (NO)				●
	FF1	Large auto-drain with manual override (NC)				●
Bowl material	**Blank**	Polycarbonate bowl	●	●	●	●
	Z	Nylon bowl	●	●	●	●
	M	Metal bowl		●	●	●
Element	**Blank**	5 µm	●	●	●	●
	Y	0.3 µm (submicron)		●	●	●
Pressure Range	**Blank**	0.05 to 0.85 MPa	●	●	●	●
	L	0.05 to 0.35 MPa	●	●	●	●
Pressure relief	**Blank**	With relief mechanism	●	●	●	●
	N	Non-relief	●	●	●	●
Pressure gauge	**Blank**	With standard pressure gauge (G401)	●	●	●	●
	T	No pressure gauge (gauge port (1/4) is assembled sealed)	●	●	●	●
	T8	Pressure gauge ready option (gauge port (1/4) is left open)	●	●	●	●
X1		IN/OUT reverse flow (right to left)	●	●	●	●
Ⓔ Display unit						
Blank		MPa display (Rc thread), psi display (NPT thread), bar display (G thread)	●	●	●	●
J1		MPa display (NPT, G thread)	●	●	●	●
Ⓕ Pipe adaptor set (included)		*11				
Blank		No included products	●	●	●	●
A6*W		1/8 pipe adaptor set	●			
A8*W		1/4 pipe adaptor set	●	●	●	
A10*W		3/8 pipe adaptor set	●	●	●	
A15*W		1/2 pipe adaptor set		●	●	
A20*W		3/4 pipe adaptor set			●	●
A25*W		1 pipe adaptor set				●
A32*W		1 1/4 pipe adaptor set				●
*** Adaptor thread**						
Blank		Rc thread	●	●	●	●
N		NPT thread	●	●	●	●
G		G thread	●	●	●	●
Ⓖ Other attachments		*12				
Blank		No included products	●	●	●	●
BW		C type bracket	●	●	●	●
B3W		L type bracket	●	●	●	
G49P		Pressure gauge: G49D-8-P10 (L: G49D-8-P04)	●	●	●	●
G59P		Pressure gauge: G59D-8-P10 (L: G59D-8-P04)	●	●	●	●
G40P		Pressure gauge: G40D-8-P10 (L: G40D-8-P04)	●	●	●	●

⚠ Precautions for model No. selection

*1: Refer to pages 98 to 99 for specifications and attachments.

*2: Select options for the drainage, bowl material, element and regulator.
When selecting options for several items, list options in order from the top.

*3: If "L" is selected for pressure range option, a low-pressure gauge (0 to 0.4 MPa) is used.

***4: Positions of check valve and pressure gauge cannot be changed.**
If the IN and OUT directions must be reversed, indicate "X1" at the end of the option field.

*5: In the case of option code "F", the min. working pressure of the auto-drain is 0.1 MPa.
Air is purged with initial drain until pressure reaches 0.1 MPa.

*6: In the case of option code "F1", the min. working pressure of the auto-drain is 0.15 MPa.

*7: For "T", a gauge plug is assembled instead of a pressure gauge.

*8: Pipe adaptor set A*00-**-W is enclosed.

*9: The pipe adaptor set and C type bracket cannot be used together.

*10: G threads and NPT threads are available for IN, OUT, gauge port and drain outlet (metal bowl with auto-drain).

*11: The adaptor port size can be selected from Rc, NPT or G.
Blank: Rc thread, N: NPT thread, G: G thread.
(Example) A8G

*12: If NPT is selected for Ⓒ Port thread, an NPT pressure gauge is supplied. If Rc or G thread is selected, an R thread pressure gauge is supplied.

Dimensions

Same as standard products. Refer to pages 102 to 104.



Regulator Standard White Series: Ozone proof

R1000-W/R2000-W/R3000-W R4000-W/R6000-W/R8000-W-P11 Series

Fluoro rubber and hydrogenated nitrile rubber, etc., used for rubber part materials.

● Port size: Rc1/8 to Rc1

JIS symbol 

RoHS CAD

How to order

R1000 - 6 ( ) - W - L P11 - ( ) - A6W BW

- A Model No.
- B Port size
- C Port thread
- D Option
  - *2
  - *3
  - *4
  - * Refer to page 28 for the explanation of the option.
- E Display unit
- F Pipe adaptor set (included)
  - *5
  - *6
- Ozone-proof specifications
- G Other attachments

Code		Description	A Model No. R1000	R2000	R3000	R4000	R6000	R8000
B Port size								
6		1/8	●					
8		1/4	●	●	●	●		
10		3/8		●	●	●		
15		1/2				●		
20		3/4					●	●
25		1					●	●
C Port thread		*7						
Blank		Rc thread	●	●	●	●	●	●
N		NPT thread	●	●	●	●	●	●
G		G thread	●	●	●	●	●	●
D Option								
Pressure range	**Blank**	0.05 to 0.85 MPa	●	●	●	●	●	●
	L	0.05 to 0.35 MPa	●	●	●	●	●	●
Pressure relief	**Blank**	With relief mechanism	●	●	●	●	●	●
	N	Non-relief	●	●	●	●	●	●
Pressure gauge	**Blank**	With standard pressure gauge (G401)	●	●	●	●	●	●
	T	No pressure gauge (gauge port (1/4) is assembled sealed)	●	●	●	●	●	●
	T8	Pressure gauge ready option (gauge port (1/4) is left open)	●	●	●	●	●	●
X1		IN/OUT reverse flow (right to left)	●	●	●	●	●	●
E Display unit								
Blank		MPa display (Rc thread), psi display (NPT thread), bar display (G thread)	●	●	●	●	●	●
J1		MPa display (NPT, G thread)	●	●	●	●	●	●
F Pipe adaptor set (included)		*7						
Blank		No included products	●	●	●	●	●	●
A6*W		1/8 pipe adaptor set	●					
A8*W		1/4 pipe adaptor set	●	●	●	●		
A10*W		3/8 pipe adaptor set	●	●	●	●		
A15*W		1/2 pipe adaptor set		●	●	●		
A20*W		3/4 pipe adaptor set				●	●	●
A25*W		1 pipe adaptor set					●	●
A32*W		1 1/4 pipe adaptor set					●	●
*** Adaptor thread**								
Blank		Rc thread	●	●	●	●	●	●
N		NPT thread	●	●	●	●	●	●
G		G thread	●	●	●	●	●	●
G Other attachments		*8						
Blank		No included products	●	●	●	●	●	●
BW		C type bracket	●	●	●	●	●	●
B3W		L type bracket	●	●	●	●	●	
B4W		B type bracket		●				
G49P		Pressure gauge: G49D-8-P10 (L: G49D-8-P04)	●	●	●	●	●	●
G59P		Pressure gauge: G59D-8-P10 (L: G59D-8-P04)	●	●	●	●	●	●
G40P		Pressure gauge: G40D-8-P10 (L: G40D-8-P04)	●	●	●	●	●	●

⚠ Precautions for model No. selection

*1: Refer to pages 136 to 137 for specifications and attachments.
*2: When selecting options for several items, list options in order from the top.
*3: If "L" is selected for pressure range option, a low-pressure gauge (0 to 0.4 MPa) is used.
*4: For "T", a gauge plug is assembled instead of a pressure gauge.
Working temperature is 5 to 50°C.
*5: Pipe adaptor set A*00-**-W is attached.
*6: The pipe adaptor set and C type bracket cannot be used together.
*7: G and NPT threads are available for IN, OUT and gauge ports.
*8: The adaptor port size can be selected from Rc, NPT or G.
Blank: Rc thread, N: NPT thread, G: G thread.
(Example) A8G
*9: If NPT is selected for ©Port thread, an NPT pressure gauge is supplied. If Rc or G thread is selected, an R thread pressure gauge is supplied.

Dimensions

Same as standard products. Refer to pages 140 to 142.



Reverse regulator Standard White Series: Ozone proof

R1100-W/R2100-W/R3100-W R4100-W/R6100-W/R8100-W-P11 Series

Fluoro rubber and hydrogenated nitrile rubber, etc., used for rubber part materials.

● Port size: Rc1/8 to Rc1

JIS symbol 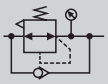

RoHS CAD

How to order

R1100 - 6 ( ) -W- L P11- ( ) - A6W BW

- R1100: Ⓐ Model No.
- 6: Ⓑ Port size
- ( ): Ⓒ Port thread
- L: Ⓓ Option *2 *3 *4 * Refer to page 28 for the explanation of the option.
- P11: Ozone-proof specifications
- ( ): Ⓔ Display unit
- A6W: Ⓕ Pipe adaptor set (included) *5 *6
- BW: Ⓖ Other attachments

Code	Description	Ⓐ Model No. R1100	R2100	R3100	R4100	R6100	R8100
Ⓑ Port size							
6	1/8	●					
8	1/4	●	●	●	●		
10	3/8		●	●	●		
15	1/2				●		
20	3/4					●	●
25	1					●	●
Ⓒ Port thread	*7						
Blank	Rc thread	●	●	●	●	●	●
N	NPT thread	●	●	●	●	●	●
G	G thread	●	●	●	●	●	●
Ⓓ Option							
Pressure range **Blank**	0.05 to 0.85 MPa	●	●	●	●	●	●
Pressure range **L**	0.05 to 0.35 MPa	●	●	●	●	●	●
Pressure relief **Blank**	With relief mechanism	●	●	●	●	●	●
Pressure relief **N**	Non-relief	●	●	●	●	●	●
Pressure gauge **Blank**	With standard pressure gauge (G401)	●	●	●	●	●	●
Pressure gauge **T**	No pressure gauge (gauge port (1/4) is assembled sealed)	●	●	●	●	●	●
Pressure gauge **T8**	Pressure gauge ready option (gauge port (1/4) is left open)	●	●	●	●	●	●
X1	IN/OUT reverse flow (right to left)	●	●	●	●	●	●
Ⓔ Display unit							
Blank	MPa display (Rc thread), psi display (NPT thread), bar display (G thread)	●	●	●	●	●	●
J1	MPa display (NPT, G thread)	●	●	●	●	●	●
Ⓕ Pipe adaptor set (included)	*8						
Blank	No included products	●	●	●	●	●	●
A6*W	1/8 pipe adaptor set	●					
A8*W	1/4 pipe adaptor set	●	●	●	●		
A10*W	3/8 pipe adaptor set	●	●	●	●		
A15*W	1/2 pipe adaptor set		●	●	●		
A20*W	3/4 pipe adaptor set				●	●	●
A25*W	1 pipe adaptor set					●	●
A32*W	1 1/4 pipe adaptor set					●	●
*** Adaptor thread**							
Blank	Rc thread	●	●	●	●	●	●
N	NPT thread	●	●	●	●	●	●
G	G thread	●	●	●	●	●	●
Ⓖ Other attachments	*9						
Blank	No included products	●	●	●	●	●	●
BW	C type bracket			●	●		
B3W	L type bracket			●	●		
B4W	B type bracket		●				
G49P	Pressure gauge: G49D-8-P10 (L: G49D-8-P04)	●	●	●	●	●	●
G59P	Pressure gauge: G59D-8-P10 (L: G59D-8-P04)	●	●	●	●	●	●
G40P	Pressure gauge: G40D-8-P10 (L: G40D-8-P04)	●	●	●	●	●	●

Precautions for model No. selection

*1: Refer to pages 144 to 145 for specifications and attachments.
*2: When selecting options for several items, list options in order from the top.
*3: If "L" is selected for pressure range option, a low-pressure gauge (0 to 0.4 MPa) is used.
*4: Positions of check valve and pressure gauge cannot be changed. If the IN and OUT directions must be reversed, indicate "X1" at the end of the option field.
For "T", a gauge plug is assembled instead of a pressure gauge.
*5: Pipe adaptor set A*00-**-W is enclosed.
*6: The pipe adaptor set and C type bracket cannot be used together.
*7: G and NPT threads are available for IN, OUT and gauge ports.
*8: The adaptor port size can be selected from Rc, NPT or G. Blank: Rc thread, N: NPT thread, G: G thread. (Example) A8G
*9: If NPT is selected for ⓒPort thread, an NPT pressure gauge is supplied. If Rc or G thread is selected, an R thread pressure gauge is supplied.

Dimensions

Same as standard products. Refer to pages 148 to 150.

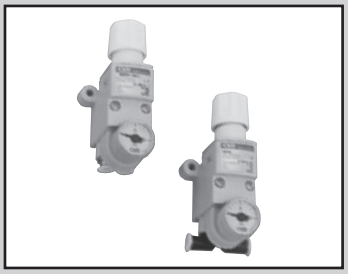

Compact regulator: Ozone proof

RB500-P11 Series

Fluoro rubber and hydrogenated nitrile rubber, etc., used for rubber part materials.

● Port size: Push-in fitting ø4, ø6

JIS symbol

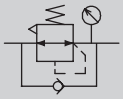

RoHS CAD

How to order

RB500 - SSC4 - P G39 P11

- Model No.
- Ⓐ Connection
- Ⓑ Option
- Ⓒ Pressure gauge
- Ozone-proof specifications

Code			Description
Ⓐ Connection			
Direction	IN	S	Straight
		L	Elbow
	OUT	S	Straight
		L	Elbow
Bore size		C4	ø4
		C6	ø6
Ⓑ Option			
Panel Mount		Blank	Without nut
		P	With nut *3
Pressure range		Blank	0.05 to 0.7 MPa
		L	0.05 to 0.35 MPa
Pressure relief		Blank	Relief
		N	Non-relief
Ⓒ Pressure gauge			
T			No pressure gauge
Blank (Press range: Blank)			With pressure gauge (G29D-6-P10)
Blank (Pressure range: L)			With pressure gauge (G39D-6-P04)
G39			With pressure gauge (G39D-6-P10)

⚠ Precautions for model No. selection

*1: Refer to page 386 for specifications.
*2: ø21 0 to 1.0 MPa pressure gauge is standard.
For low pressure, ø27 0 to 0.4 MPa low pressure gauge is provided.
*3: Indicate option code “P” for panel mounting.

Dimensions

Same as standard products. Refer to page 387.

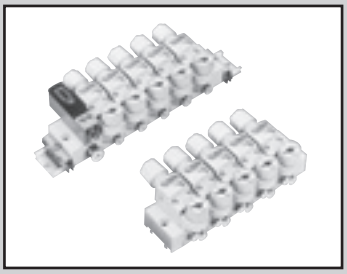

Block manifold regulator: Ozone proof

MNRB500-P11 Series

Fluoro rubber and hydrogenated nitrile rubber, etc., used for rubber part materials.

● Port size: Push-in fitting ø4, ø6, ø8

RoHS CAD

How to order

MNRB500A - SSC64 - 5 - N G39 - D P11

- Ⓐ Model No. *1
- Ⓑ Fitting
- Ⓒ Port size
- Ⓓ Station No. *2
- Ⓔ Option *3
- Ⓕ Mounting method
- Ozone-proof specifications

JIS symbol

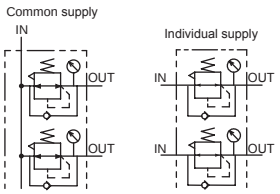

Code	Description
Ⓐ Model No.	
MNRB500A	Common supply
MNRB500B	Individual supply
Ⓑ Fitting	
IN direction	
S	Straight
L	Elbow
OUT direction	
S	Straight
L	Elbow

Ⓒ Port size IN/OUT		MNRB500A	MNRB500B
C64	IN; ø6, OUT; ø4	●	
C66	IN; ø6, OUT; ø6	●	
C84	IN; ø8, OUT; ø4	●	
C86	IN; ø8, OUT; ø6	●	
C4	IN, OUT; ø4		●
C6	IN, OUT; ø6		●

Ⓓ Station No. *3	
1	1 station
2	2 stations
⋮	⋮
10	10 stations

Ⓔ Option			MNRB500A	MNRB500B
Pressure range	**Blank**	0.05 to 0.7 MPa (pressure gauge: G29D-6-P10)	●	
	L	0.05 to 0.35 MPa (gauge: G39D-6-P04)	●	
Pressure relief	**Blank**	Relief	●	
	N	Non-relief	●	
Pressure gauge *4	**Blank**	With pressure gauge	●	
	T	Without pressure gauge (gauge port Rc 1/8)	●	
	G39	With pressure gauge (G39D-6-P10)	●	
Flow direction	**Blank**	Standard flow (left → right)	●	●
	X1	Reverse flow (right → left)	●	

Ⓕ Mounting method	
Blank	DIN rail mount
D	Direct mount

Precautions for model No. selection

*1: Refer to page 392 for specifications.
*2: The air supply block is one station.
When using three or more stations simultaneously with the common supply, increase one supply block station for every three stations.
Designate with mix manifold specifications sheet.
*3: Up to five direct mounting stations can be used.
*4: Options and pressure gauges for each regulator block are the same.
*5: ø21 0 to 1.0 MPa pressure gauge is standard.
For low pressure, ø27 0 to 0.4 MPa low-pressure gauge is provided.
*6: When other than basic model specifications, ask CKD to issue the mix manifold specifications on page 405.

Dimensions

Same as standard products. Refer to pages 394 and 395.



Regulator: Ozone proof

B2019-P11 Series

Fluoro rubber or hydrogenated nitrile rubber, etc., used for rubber part materials.

● Port size: Rc1/8, Rc1/4

JIS symbol



How to order

B2019 - **1C** - **NPB** **P11**

- B2019: Model No.
- 1C: Ⓐ Port size *2
- NPB: Ⓑ Option *1 *3
- P11: Ozone-proof specifications

Code		Description
Ⓐ Port size		
1C		Rc1/8
2C		Rc1/4
Ⓑ Option		
Regulator	**Blank**	Standard
	N	Non-relief
	L	Low pressure (0.02 to 0.34 MPa)
	P	Panel mount
Included product	**Blank**	No included products
	G	Pressure gauge
	B	Bracket

⚠ Precautions for model No. selection

*1: Refer to page 418 for specifications and attachments.
*2: If port size NPT thread is selected, do not indicate nominal size C. Example) B2019-1
*3: The pressure gauge supplied is G49D-6-P10 (G49D-6-P04 for low pressure).

Dimensions

Same as standard products. Refer to page 419.

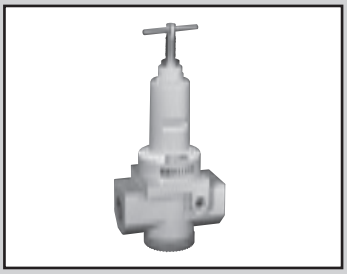

Reverse regulator (chuck valve integrated): Ozone proof

2415-P11 Series

Fluoro rubber and hydrogenated nitrile rubber, etc., used for rubber part materials.

● Port size: Rc3/4, Rc1, Rc1 1/2

JIS symbol

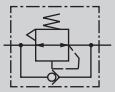

RoHS

How to order

2415 - 6C - NKG P11

- 2415: Model No.
- 6C: Ⓐ Port size *2
- NKG: Ⓑ Option *1 *3
- P11: Ozone-proof specifications

Code		Description
Ⓐ Port size		
6C		Rc3/4
8C		Rc1
10C		Rc1 1/2
Ⓑ Option		
Regulator	**Blank**	Standard
	N	Non-relief
	K	Plastic knob
Included product	**Blank**	Without included product
	G	Pressure gauge

Precautions for model No. selection

*1: Refer to page 462 for specifications and attachments.
*2: If port size NPT thread is required, do not indicate nominal size C. Example) 2415-6
*3: The pressure gauge supplied is G59D-8-P10 (G59D-8-P04 for low pressure).

Dimensions

Same as standard products. Refer to page 463.

Made-to-order products

Available as made-to-order products. Contact CKD for details.

SC-M5 speed controller: Ozone-proof

■ Rubber material is changed to fluoro rubber
■ Port size: M5



2QV/3QV Quick Valve: Ozone-proof

■ Rubber part materials changed to fluoro rubber or hydrogenated nitrile rubber, etc.
■ 2- and 3-port valves are available



DSC speed controller with adjusting dial: Ozone-proof

■ Rubber part materials changed to fluoro rubber or hydrogenated nitrile rubber, etc.
■ Port size: Rc1/8, Rc1/4, Rc3/8, Rc1/2



Introduction of made-to-order products

		Page
Flow sensor for air unit	CXU30-FSM2	Ending Page 19
Flow sensor for clean air unit	CAU30-FSM2	Ending Page 19
Block needle valve for air unit	CXU30	Ending Page 19
Drain outlet custom made	W/F/M3000 / 4000	Ending Page 19
Drain outlet barbed nipple	B7019-2C	Ending Page 19
Water filter	A1019	Ending Page 19
Pressure gauge with proximity switch	G59D	Ending Page 19
With set pressure upper limit stopper	RPE1000	Ending Page 20
Knob lock mechanism	R3000/4000	Ending Page 20
Residual pressure exhaust valve	PBC	Ending Page 20
White Vaseline	W/F/R*000,QEV2,SHV2	Ending Page 21
Fluorine	W/F/R*000	Ending Page 21
Vaseline coating	CHV2,GW	Ending Page 21

Made-to-order products

Available as made-to-order products. Contact CKD for details.

CXU30-FSM2 Flow sensor for air unit

- Air unit and module can be connected
- Flow rate range 500, 1000 ℓ/min (ANR)

CAU30-FSM2 Flow sensor for clean air unit

- Clean air unit and module can be connected
- Flow rate range 500, 1000 ℓ/min (ANR)

CXU30 Block needle valve for air unit

- Air unit and module can be connected
- Flow rate adjustment needle valve

W/F/M3000 / 4000 Drain outlet custom made

- Drain outlet bore size: Rc1/8, Rc1/4
- Port size: Rc1/4, Rc3/8, Rc1/2

B7019-2C Drain outlet barbed nipple

- With piston drain (D) for drain piping
- Recommended tube: 3/16 (inch size inner diameter: ø2.99)

A1019 Vacuum filter

- Fluid: general industrial clear water
- Filtration: 100 µm
- Port size: Rc1/4



G59D Pressure gauge with proximity switch

- Proximity output with no risk of contact failure
- PNP transistor/open collector
- Outer diameter: ø52.5, Port size: R1/4, full scale: 1.0 MPa
- Switch setting range: 0.1 to 0.8 MPa



Made-to-order products

Made-to-order products (safety)

Available as made-to-order products. Contact CKD for details.

RPE1000 With set pressure upper limit stopper

- Set upper pressure limit mechanism with stopper
- Port size: Rc1/4



R3000/4000 Knob lock mechanism

- Knob lock mechanism with special screw
- Port size: Rc1/4, Rc3/8, Rc1/2



PBC Residual pressure exhaust valve

- Discharges residual pressure between drive valve and cylinder
- Port size: Rc1/4
- Basic and 3-way valve integrated are available

Made-to-order products (grease custom made)

Available as made-to-order products. Contact CKD for details.

W/F/R*000 White Vaseline

- Changes grease in fluid passage into white Vaseline
- Port size: Rc1/8, Rc1/4, Rc3/8, Rc1/2, Rc3/4, Rc1



W/F/R*000 Fluorine

- Changes grease in fluid passage into fluorine grease
- Port size: Rc1/8, Rc1/4, Rc3/8, Rc1/2, Rc3/4, Rc1



QEV2 White Vaseline

- Changes grease in fluid passage into white Vaseline
- Port size: Rc1/8 to Rc1



SHV2 White Vaseline

- Changes grease in fluid passage into white Vaseline
- Port size: Rc1/8 to Rc1



International System of Units (SI units)

■ Conversion of SI units and conventional units

SI units (International System of Units) are used in this catalog.
Conversion for SI and conventional units are shown below.

■ SI unit conversion table (SI units are indicated with bold line.)

Conversion example (for pressure) 1 kgf/cm^2⇒9.80665 × 10^{-2} MPa 1 MPa⇒1.01972 × 10 kgf/cm^2

● Force

N	dyn	kgf
1	1×10^{5}	1.01972×10^{-1}
1×10^{-5}	1	1.01972×10^{-6}
9.80665	9.80665×10^{5}	1

● Viscosity

Pa·s	cP	P
1	1×10^{3}	1×10
1×10^{-3}	1	1×10^{-2}
1×10^{-1}	1×10^{2}	1

Note: 1 P=1 dyn·s/cm^2 = 1 g/cm·s,
1 Pa·s = 1 N·s/m^2, 1 cP = 1 mPa·s

● Stress

Pa or N/m^2	MPa or N/mm^2	kgf/mm^2	kgf/cm^2
1	1×10^{-6}	1.01972×10^{-7}	1.01972×10^{-5}
1×10^{6}	1	1.01972×10^{-1}	1.01972×10
9.80665×10^{6}	9.80665	1	1×10^{2}
9.80665×10^{4}	9.80665×10^{-2}	1×10^{-2}	1

Note: 1 Pa = 1 N/m^2, 1 MPa = 1 N/mm^2

● Kinematic viscosity

m^2/s	cSt	St
1	1×10^{6}	1×10^{4}
1×10^{-6}	1	1×10^{-2}
1×10^{-4}	1×10^{2}	1

Note: 1 St = 1 cm^2/s, 1 cSt = 1 mm^2/s

● Pressure

Pa	kPa	MPa	bar	kgf/cm^2	atm	mmH$_2$0 or mmAq	mmHg or Torr
1	1×10^{-3}	1×10^{-6}	1×10^{-5}	1.01972×10^{-5}	9.86923×10^{-6}	1.01972×10^{-1}	7.50062×10^{-3}
1×10^{3}	1	1×10^{-3}	1×10^{-2}	1.01972×10^{-2}	9.86923×10^{-3}	1.01972×10^{2}	7.50062
1×10^{6}	1×10^{3}	1	1×10	1.01972×10	9.86923	1.01972×10^{5}	7.50062×10^{3}
1×10^{5}	1×10^{2}	1×10^{-1}	1	1.01972	9.86923×10^{-1}	1.01972×10^{4}	7.50062×10^{2}
9.80665×10^{4}	9.80665×10	9.80665×10^{-2}	9.80665×10^{-1}	1	9.67841×10^{-1}	1×10^{4}	7.35559×10^{2}
1.01325×10^{5}	1.01325×10^{2}	1.01325×10^{-1}	1.01325	1.03323	1	1.03323×10^{4}	7.60000×10^{2}
9.80665	9.80665×10^{-3}	9.80665×10^{-6}	9.80665×10^{-5}	1×10^{-4}	9.67841×10^{-5}	1	7.35559×10^{-2}
1.33322×10^{2}	1.33322×10^{-1}	1.33322×10^{-4}	1.33322×10^{-3}	1.35951×10^{-3}	1.31579×10^{-3}	1.35951×10	1

Note: 1 Pa = 1 N/m^2

● Work/energy/quantity of heat

J	kW·h	kgf·m	kcal
1	2.77778×10^{-7}	1.01972×10^{-1}	2.38889×10^{-4}
3.600×10^{6}	1	3.67098×10^{5}	8.6000×10^{2}
9.80665	2.72407×10^{-6}	1	2.34270×10^{-3}
4.18605×10^{3}	1.16279×10^{-3}	4.26858×10^{2}	1

Note: 1 J = 1 W·s, 1 J = 1 N·m 1 cal = 4.18605 J (according to the Measurement Act)

● Power (power/motivity) heat flow

W	kgf·m/s	PS	kcal/h
1	1.01972×10^{-1}	1.35962×10^{-3}	8.6000×10^{-1}
9.80665	1	1.33333×10^{-2}	8.43371
7.355×10^{2}	7.5×10	1	6.32529×10^{2}
1.16279	1.18572×10^{-1}	1.58095×10^{-3}	1

Note: 1 W = 1 J/s, PS: French horsepower
1 PS = 0.7355 kW (according to the Act for Enforcement of the Measurement Act)
1 cal = 4.18605 J (according to the Measurement Act)

● Thermal conduction ratio

W/(m·k)	kcal/(h·m·°C)
1	8.6000×10^{-1}
1.16279	1

Note: 1 cal = 4.18605 J (according to the Measurement Act)

● Coefficient of heat transfer

W/(m^2·k)	kcal/(h·m^2·°C)
1	8.6000×10^{-1}
1.16279	1

Note: 1 cal = 4.18605 J (according to the Measurement Act)

● Specific heat

J/(kg·k)	kcal/(kg·°C) cal/(g·°C)
1	2.38889×10^{-4}
4.18605×10^{3}	1

Note: 1 cal = 4.18605 J (according to the Measurement Act)

JIS symbols

JIS symbols used in this catalog are old symbols following JISB0125-1: 2001.
Refer to JISB0125-1: 2007 or JFPS2011: 2006 for new symbols.

Page

1. Element of symbol — Ending Page 24
2. Line and port — Ending Page 25
3. Directional control valve — Ending Page 25
4. Pressure control valve — Ending Page 31
5. Flow rate control valve — Ending Page 31
6. Cylinder and motor — Ending Page 31
7. Power and tank — Ending Page 32
8. Air adjustment component — Ending Page 32
9. Auxiliary components and other components — Ending Page 33

CAD data is available.

JIS symbol list

1. Element of symbol

(a) Symbol element

Name	Symbol	Applications	Remarks
Line Continuous line		(1) Main line (2) Air supply line to pilot valve (3) Electric signal line	· Return line included · Other: Indicate the electrical code to distinguish from the pipeline.
Broken line		(1) Pilot operation line (2) Drain line (3) Filter (4) Valve switching position	· Internal pilot · External pilot
Dashed line		Surrounding line	· Surrounding line indicating unit with more than one function
Double line		Mechanical connection	· Rotary shaft, lever, piston rod, etc.
Circle Large circle		Energy converter	· Pump, compressor, electric motor, etc.
Medium circle		(1) Measuring instrument (2) Rotation fitting	
Small circle		(1) Check valve (2) Link (3) Roller	· Roller: Put a dot in the center.
Point		(1) Connection of pipeline (2) Roller axis	
Half circle		Shaft of the pump or actuator whose rotating angle is limited	
Square		(1) Fluid control components (2) Driving motor other than electric motor	· The port intersects vertically with the side.
		Fluid adjustment components	· The port intersects with the corner. · Filter, drain separator, lubricator, heat exchanger, etc.
		(1) Cushion in cylinder (2) Weight in accumulator	
Rectangle		(1) Cylinder (2) Valve	· $m > l$
		Piston	
		Specific operation	· $l \leq m \leq 2l$ · Refer to Item 3 (a)
Others Hollow (large)		Oil tank (ventilation)	· $m > l$
Hollow (small)		Local display of oil tank (ventilation)	
Capsule		(1) Oil tank (closed) (2) Pneumatics tank (3) Accumulator (4) Auxiliary gas vessel	

(b) Functional element

Name	Symbol	Applications	Remarks
Equilateral triangle			· Fluid energy direction · Type of fluid · Energy source display
Filled in		Hydraulic pressure	
In white		Compressed air and other gas pressure	· Including exhaust to atmosphere
Arrow display Straight line or diagonal line		(1) Linear movement (2) Fluid flow path and direction in valve (3) Heat flow direction	
Curve		Rotary motion	· Arrow indicates the rotation direction viewed from shaft free end
Diagonal line		Variable operation or adjustment method	· Draw diagonal line with appropriate length · Pump, spring or variable solenoid actuator, etc.
Others		Electric	· Use the following symbols when AC and DC identification is required
		Closed path or closed port	Closed path Port
		Solenoid actuator	
		Temperature instruction or adjustment	
		Driving motor	
		Spring	· Refer to Item 7 · Two-thread is preferable
		Restriction	
		Simplified code of valve seat of check valve	

(c) Mechanical element

Name	Symbol	Remarks
Rod		· 2-direction operation · Arrow indication is optional
Rotary shaft		· 2-direction operation · Arrow indication is optional
Detent		· 2-direction operation · Vertical line on notch indicates clamp
Latch		· 1-direction operation · * Code showing how to release

Name	Symbol	Remarks
Over center mechanism		· 2-direction operation

2. Line and port
(a) Pipeline

Name	Symbol	Remarks
Connection	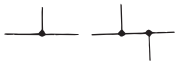	
Intersection		· Not connected
Flexible line		· Hose (normally connected to movable part)

(b) Port

Name	Symbol	Remarks
Air vent		· Air venting is continuously performed · Air venting is performed during a specific period and then the port is closed · Air venting is performed by controlling the check mechanism as necessary
Exhaust port	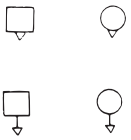	· For pneumatic pressure only · Without port · With port
Quick fitting	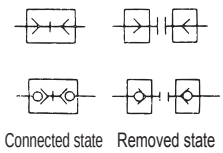	· Without check valve · With check valve (self sealant fitting)
Rotation fitting		· Swivel joint and rotary joint
1 line		· 1-direction rotation
3 line		· 2-direction rotation

3. Directional control valve
(a) Operation

Name	No.	Symbol	Remarks
Manual control	⑩	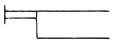	· General symbol used when the operation or the number of operating directions is not specified
Push button	⑪	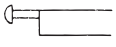	· 1-direction operation
Pull button	⑫	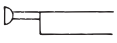	· 1-direction operation
Push/pull button	⑬	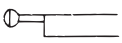	· 2-direction operation

Name	No.	Symbol	Remarks
Lever	⑭		·2-direction operation (including rotary motion)
Pedal	⑮		·1-direction operation (including rotary motion)
Double pedal	⑯		· 2-direction operation (including rotary motion)
Mechanical control plunger	⑳ ㉑		· 1-direction operation
Variable stroke length limiter	㉒		· 2-direction operation
Spring	㉓	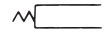	· 1-direction operation
Roller	㉔		· 2-direction operation
Pull roller	㉕		· Arrow shows operation direction. Indication may be omitted. · 1-direction operation
Electrical control	㉚		· Solenoid, torque motor, etc.
Linear electric actuator Single acting solenoid	㉛		· 1-direction operation · Diagonal line may also run downward left-right
Double acting solenoid	㉜	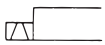	· 2-direction operation · Diagonal line may also spread upward
Single acting variable solenoid actuator	㉝	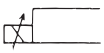	· 1-direction operation · Proportional solenoid, · Force motor, etc.
Double acting variable solenoid actuator	㉞		· 2-direction operation · Torque motor
Rotary electric actuator	㉟	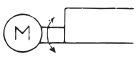	· 2-direction operation · Electric motor
Indirect electric actuator Single acting solenoid	㊱	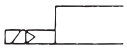	* JIS covers pilot operation, but the valve is typically used as a solenoid valve, so the transfer symbols ㊱ and ㊲ have been used for the electric operation classification.
Double acting solenoid	㊲	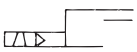	
Pilot operation Direct pilot operation	㊵	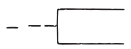	
	㊶	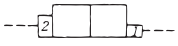	· When the pressurized area is different, indicate the values of the area ratio within the rectangle when required.
Internal pilot	㊸		· Operation flow path is provided inside the device.
External pilot	㊹		· Operation flow path is provided outside the device.

Name	No.	Symbol	Remarks
Indirect pilot operation Pressurized operation method Pneumatic pilot	㊷		· Internal pilot · No primary operation
Electromagnetic/ pneumatic pilot	㊱	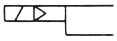	· With primary operation by single acting solenoid · Internal pilot * As this symbol generally indicates a solenoid valve, it is classified into the electrical control category and identified with a number in the ㉚s.
Electromagnetic/ pneumatic pilot with manual override	㊱ ⑩	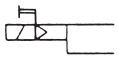	· Valve with manual override added to the above operation

(b) Directional control valve basic

No. of Ports	No. of Positions	Status of normal position	No.	Symbol	Remarks
2	2	Normally closed	Ⓐ	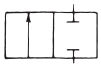	Normally closed
2	2	Normally open	Ⓑ	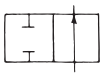	Normally open
3	2	Normally closed	Ⓒ	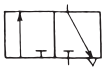	
3	2	Normally open	Ⓓ		
4	2	P/B connection	Ⓔ	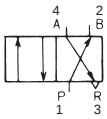 Note) Numerals are as indicated in JISB 8375 (ISO 5599).	
5	2	P/B connection	Ⓕ	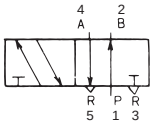	
4	3	All ports closed	Ⓖ	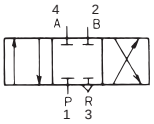	
5	3	All ports closed	Ⓗ	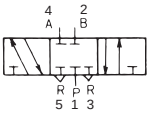	
4	3	A/B/R connection	Ⓘ	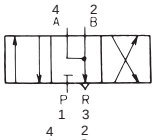	
5	3	A/B/R connection	Ⓙ	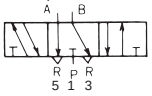	

No. of Ports	No. of Positions	Status of normal position	No.	Symbol	Remarks
4	3	P/A/B connection	Ⓚ	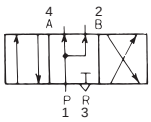	
5	3	P/A/B connection	Ⓛ	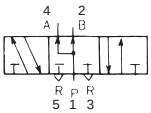 Note) Numerals are as indicated in JISB 8375 (ISO 5599).	

(c) Manual control valve

Name			Combination symbol			Symbol
Basic and operating method	No. of Ports	No. of Positions	Operation mech	Basic	Operation mech	
Direct acting normally closed push-button/ spring/return	2	2	⑪	Ⓐ	㉓	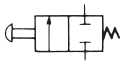
Direct acting normally open push-button/spring/ return	2	2	⑪	Ⓑ	㉓	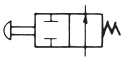
Direct acting normally closed push-button/ spring/return	3	2	⑪	Ⓒ	㉓	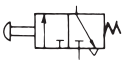
Direct acting normally open push-button/spring/ return	3	2	⑪	Ⓓ	㉓	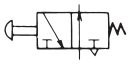
Direct acting normally closed pull button/spring/ return	2	2	⑫	Ⓐ	㉓	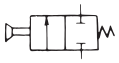
Direct acting normally open pull button/spring/ return	2	2	⑫	Ⓑ	㉓	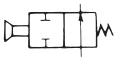
Direct acting normally closed pull button/spring/ return	3	2	⑫	Ⓒ	㉓	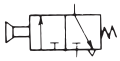
Direct acting normally open pull button/spring/ return	3	2	⑫	Ⓓ	㉓	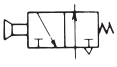
Direct acting normally closed push/pull button	2	2	⑬	Ⓐ		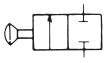
Direct acting normally open push/pull button	2	2	⑬	Ⓑ		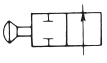
Direct acting normally closed push/pull button	3	2	⑬	Ⓒ		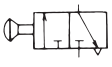
Direct acting normally open push/pull button	3	2	⑬	Ⓓ		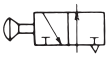

Name	No. of Ports	No. of Positions	Combination symbol: Operation mech	Combination symbol: Basic	Combination symbol: Operation mech	Symbol
Basic and operating method						
Direct acting normally closed lever/spring/return	2	2	⑭	Ⓐ	㉓	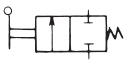
Direct acting normally open lever/spring/return	2	2	⑭	Ⓑ	㉓	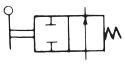
Direct acting normally closed lever/spring/return	3	2	⑭	Ⓒ	㉓	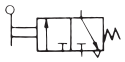
Direct acting normally open lever/spring/return	3	2	⑭	Ⓓ	㉓	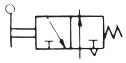
Direct acting lever with detent	2	2	⑭	Ⓐ	③	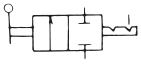
Direct acting lever with detent	3	2	⑭	Ⓒ	③	③Detent item 1 (c) ④Latch item 1 (c) Generally, key selector valve
Direct acting lever with latch	2	2	⑭	Ⓐ	④	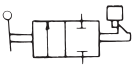
Direct acting lever with latch	3	2	⑭	Ⓒ	④	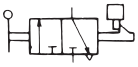
Direct acting normally closed pedal/spring/return (foot valve)	2	2	⑮	Ⓐ	㉓	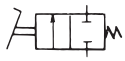
Direct acting normally open pedal/spring/return	2	2	⑮	Ⓑ	㉓	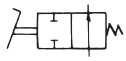
Direct acting normally closed pedal	3	2	⑮	Ⓒ	㉓	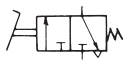
Direct acting normally open pedal	3	2	⑮	Ⓓ	㉓	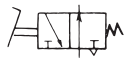
Direct acting double pedal (foot valve for both feet)	2	2	⑯	Ⓐ		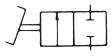
Direct acting double pedal (foot valve for both feet)	3	2	⑯	Ⓒ		
Direct acting push button spring/return	4	2	⑪	Ⓔ	㉓	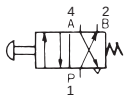
Direct acting push button spring/return	5	2	⑪	Ⓕ	㉓	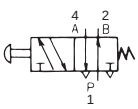

Name	No. of Ports	No. of Positions	Combination symbol: Operation mech	Combination symbol: Basic	Combination symbol: Operation mech	Symbol
Basic and operating method						
Direct acting both sides operation push button	4	2	⑪	Ⓔ	⑪	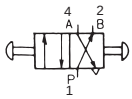
Direct acting both sides operation push button	5	2	⑪	Ⓕ	⑪	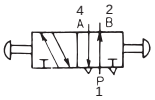
Direct acting push/pull button	4	2	⑬	Ⓔ		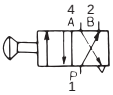
Direct acting push/pull button	5	2	⑬	Ⓕ		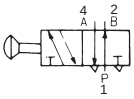
Direct acting closed center with lever/detent	4	3	⑭	Ⓖ	③	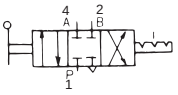
Direct acting closed center with lever/detent	5	3	⑭	Ⓗ	③	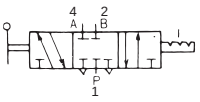
Direct acting pedal spring/return (foot valve)	4	2	⑮	Ⓔ	㉓	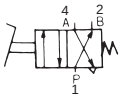
Direct acting pedal spring/return (foot valve)	5	2	⑮	Ⓕ	㉓	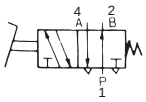
Direct acting double pedal (foot valve)	4	2	⑯	Ⓔ		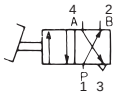
Direct acting double pedal (foot valve)	5	2	⑯	Ⓕ		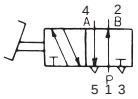
Direct acting double pedal all ports closed with detent	4	3	⑯	Ⓖ	③	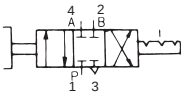
Direct acting double pedal all ports closed with detent	5	3	⑯	Ⓗ	③	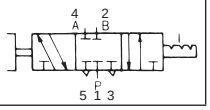

Note) Numerals are as indicated in JISB 8375 (ISO 5599).

(d) Mechanical control valve

Name	No. of Ports	No. of Positions	Combination symbol: Operation mech	Combination symbol: Basic	Combination symbol: Operation mech	Symbol
Basic and operating method						
Direct acting normally closed plunger spring/return	2	2	㉑	Ⓐ	㉓	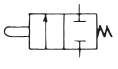
Direct acting normally open plunger spring/return	2	2	㉑	Ⓑ	㉓	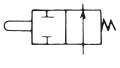

Name			Combination symbol			Symbol
Basic and operating method	No. of Ports	No. of Positions	Operation mech	Basic	Operation mech	
Direct acting normally closed plunger	3	2	㉑	Ⓒ	㉓	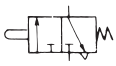
Direct acting normally open plunger	3	2	㉑	Ⓓ	㉓	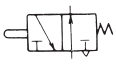
Direct acting normally closed roller spring/return	2	2	㉔	Ⓐ	㉓	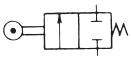
Direct acting normally open roller spring/return	2	2	㉔	Ⓑ	㉓	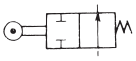
Direct acting normally closed roller spring/return	3	2	㉔	Ⓒ	㉓	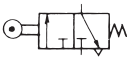
Direct acting normally open roller spring/return	3	2	㉔	Ⓓ	㉓	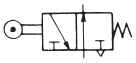
Direct acting normally closed single roller spring/return	2	2	㉕	Ⓐ	㉓	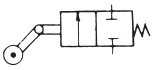
Direct acting normally open single roller spring/return	2	2	㉕	Ⓑ	㉓	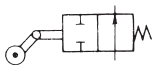
Direct acting normally closed single roller spring/return	3	2	㉕	Ⓒ	㉓	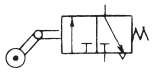
Direct acting normally open single roller spring/return	3	2	㉕	Ⓓ	㉓	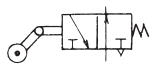

(e) Pilot operated valve

Name			Combination symbol			Symbol
Basic and operating method	No. of Ports	No. of Positions	Operation mech	Basic	Operation mech	
Direct acting pilot normally closed spring/return	2	2	㊶	Ⓐ	㉓	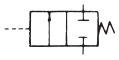
Direct acting pilot normally open spring/return	2	2	㊶	Ⓑ	㉓	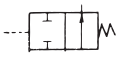
Direct acting pilot normally closed spring/return	3	2	㊶	Ⓒ	㉓	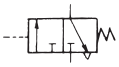
Direct acting pilot normally open pilot	3	2	㊶	Ⓓ	㉓	

Name			Combination symbol			Symbol
Basic and operating method	No. of Ports	No. of Positions	Operation mech	Basic	Operation mech	
Direct acting both sides pilot	2	2	㊶	Ⓐ	㊶	
Direct acting both sides pilot	3	2	㊶	Ⓒ	㊶	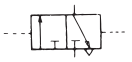
Direct acting pilot spring/return	4	2	㊶	Ⓔ	㉓	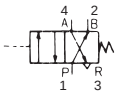
Direct acting pilot spring/return	5	2	㊶	Ⓕ	㉓	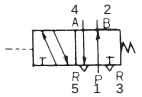
Direct acting both sides pilot	4	2	㊶	Ⓔ	㊶	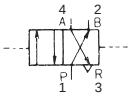
Direct acting both sides pilot	5	2	㊶	Ⓕ	㊶	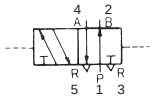
Direct acting all ports closed both sides pilot spring/center	4	3	㊶ ㉓	Ⓖ	㊶ ㉓	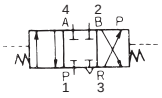
Direct acting all ports closed both sides pilot spring/center	5	3	㊶ ㉓	Ⓗ	㊶ ㉓	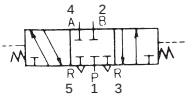
Direct acting A/B/R connection both sides pilot spring/center						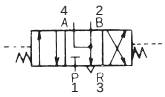
Direct acting both sides pilot A/B/R connection spring/center						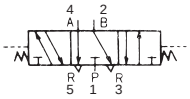
Direct acting P/A/B connection both sides pilot spring/center						* 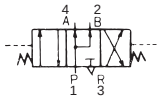
Direct acting P/A/B connection both sides pilot spring/center						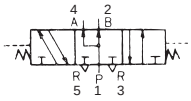
						* The basic valve's operation symbol located in the center position can be written on the diagram with a projection line from the center position of the basic valve.
						Example 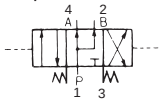
Indirect operation normally closed pilot spring/return						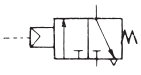

Note) Numerals are as indicated in JISB 8375 (ISO 5599).

(f) Check valve, shuttle valve, exhaust valve

Name	Combination symbol: Operation mech	Combination symbol: Basic	Combination symbol: Operation mech	Symbol (Detailed and simplified symbol)	No.
Check valve without spring	㊸	Ⓐ	㊸	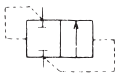 Simplified symbol 	ⓐ
Check valve with spring	㊸ ㉓	Ⓐ	㊸	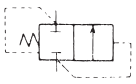 Simplified symbol 	ⓐ′
Pilot operation check valve	㊶ ㊸	Ⓐ	㊸	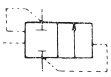 Valve is closed by external pilot Simplified symbol 	ⓑ
High pressure priority shuttle valve	㊸	Ⓒ	㊸	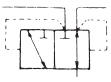 Simplified symbol 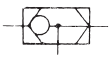	ⓒ
Low pressure priority shuttle valve				 The low pressure inlet is connected to the low-pressure priority output, and the high-pressure inlet is closed. Simplified symbol 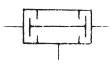	ⓓ
Quick manual valve				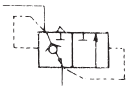 Simplified symbol 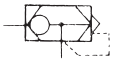	ⓔ

(g) Solenoid valve

Name: Basic and operating method	No. of Ports	No. of Positions	Combination symbol: Operation mechanism	Combination symbol: Basic	Combination symbol: Operation mechanism	Symbol
Direct acting normally closed Single acting solenoid spring/return	2	2	㉛	Ⓐ	㉓	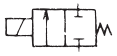
Direct acting normally open Single acting solenoid spring/return	2	2	㉛	Ⓑ	㉓	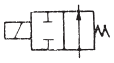
Direct acting normally closed single acting solenoid	3	2	㉛	Ⓒ	㉓	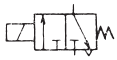
Direct acting normally open single acting solenoid	3	2	㉛	Ⓓ	㉓	
Direct acting both sides solenoid	2	2	㉛	Ⓐ	㉛	
Direct acting both sides solenoid	3	2	㉛	Ⓒ	㉛	
Direct acting double acting solenoid ㊟Use when the relationship to the electric signal need not be indicated.	3	2	㉜	Ⓒ		㊟  ㊟Position and functions of valving element are specified.
Direct acting Single acting solenoid	4	2	㉛	Ⓔ	㉓	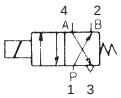
Direct acting Single acting solenoid	5	2	㉛	Ⓕ	㉓	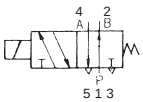
Indirect operation Single acting solenoid spring/return ㊟Pressure/return	4	2	㊱	Ⓔ	㉓ ㊸	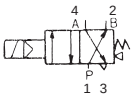
Indirect operation Single acting solenoid spring/return ㊟Pressure/return	5	2	㊱	Ⓕ	㉓	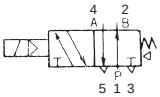 ㊟For the pressure and return operation symbols, indicate the functional element equilateral triangle at the edge.
Direct acting both sides solenoid	4	2	㉛	Ⓔ	㉛	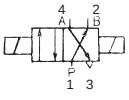

Note) Numerals are as indicated in JISB 8375 (ISO 5599).

JIS

Name			Combination symbol			Symbol
Basic and operating method	No. of Ports	No. of Positions	Operation mechanism	Basic	Operation mechanism	
Direct acting double acting solenoid	4	2	㉜	Ⓔ		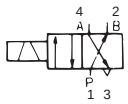 ㊟As stated above, JIS stipulates use if the relationship to the electrical signal need not be indicated. If this is clear, ㉜ can be indicated as an abbreviation of ㉛-◯-㉛.
Direct acting both sides solenoid	5	2	㉛	Ⓕ	㉛	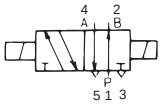
Direct acting double acting solenoid	5	2	㉜	Ⓕ		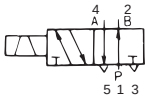
Indirect operation both sides solenoid	4	2	㊱	Ⓔ	㊱	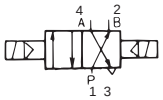
Indirect operation double acting solenoid	4	2	㊲	Ⓔ		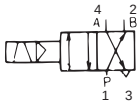
Indirect operation both sides solenoid	5	2	㊱	Ⓕ	㊱	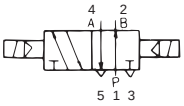
Indirect operation double acting solenoid	5	2	㊲	Ⓕ		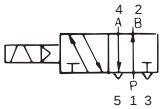
Direct acting all ports closed both sides solenoid spring/pressure centers	4	3	㉛ ㉓	Ⓖ	㉛ ㉓	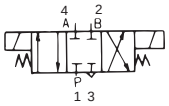
Direct acting all ports closed both sides solenoid spring/pressure centers	5	3	㉛ ㉓	Ⓗ	㉛ ㉓	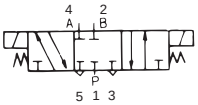
Direct acting A/B/R connection both sides solenoid spring/pressure centers	4	3	㉛ ㉓	Ⓘ	㉛ ㉓	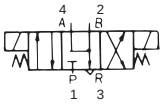
Direct acting A/B/R connection both sides solenoid spring/pressure centers	5	3	㉛ ㉓	Ⓙ	㉛ ㉓	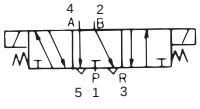
Direct acting P/A/B connection both sides solenoid spring/pressure centers	4	3	㉛	Ⓚ	㉛	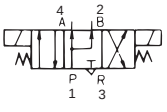

Name			Combination symbol			Symbol
Basic and operating method	No. of Ports	No. of Positions	Operation mechanism	Basic	Operation mechanism	
Direct acting P/A/B both sides solenoid spring/pressure centers used together	5	3	㉛ ㉓㊸	Ⓛ	㉛ ㊸㉓	
Direct acting P/A/B connection both sides solenoid with manual override			㉛ ⑩ ㉓㊸	Ⓛ	㉛ ⑩ ㊸㉓	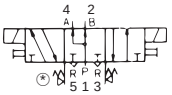 ㊟If the diagram is difficult to read when all symbols are indicated on both ends, separate symbols.
Indirect operation all ports closed both sides solenoid spring/pressure centers	4	3	㊱ ㉓	Ⓖ	㊱ ㉓	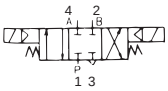
Indirect operation all ports closed both sides solenoid spring/pressure centers	5	3	㊱ ㉓㊸	Ⓗ	㊱ ㉓	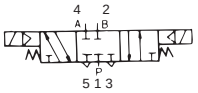
Indirect operation A/B/R connection Both sides solenoid spring/pressure centers used together	4	3	㊱ ㉓㊸	Ⓘ	㊱ ㊸㉓	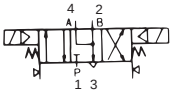
Indirect operation A/B/R connection Both sides solenoid spring/pressure centers used together	5	3	㊱ ㉓㊸	Ⓙ	㊱ ㊸㉓	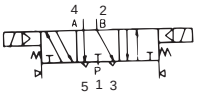
Indirect operation P/A/B connection Both sides solenoid spring/pressure center pilot with manual override	4	3	㊱ ⑩ ㉓	Ⓚ	㊱ ⑩ ㉓	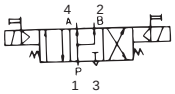
Indirect operation P/A/B connection Both sides solenoid spring/pressure center with manual override	5	3	㊱ ⑩ ㉓	Ⓛ	㊱ ⑩ ㉓	

Note) Numerals are as indicated in JISB 8375 (ISO 5599).

Name			Combination symbol			Symbol
Basic and operating method	No. of Ports	No. of Positions	Operation mechanism	Basic	Operation mechanism	
(Proportional control valve) Direct acting solenoid proportional flow rate control valve	2		㉝	Ⓐ	㉓	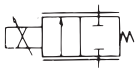
Direct acting solenoid proportional flow rate control valve	3		㉝	Ⓒ	㉓	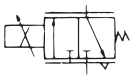
(Servo valve) Direct acting solenoid servo control spring/center	4		㉞ ㉓	Ⓖ	㉓	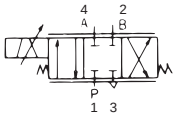
Direct acting Solenoid servo control spring/center	5		㊱ ㉓	Ⓗ	㉓	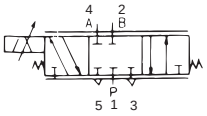

Note) Numerals are as indicated in JISB 8375 (ISO 5599).

4. Pressure control valve

Name	Symbol	Remarks
Relief valve	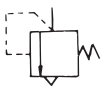	Direct acting or general symbol
Pilot operation relief valve	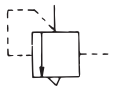	
Regulator	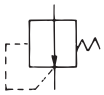	Non-relief
Regulator with relief	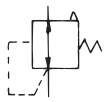	
Pilot operation regulator	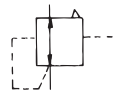	
Regulator with filter	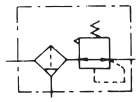	
Regulator with check valve	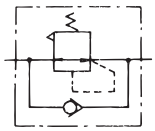	
Sequence valve	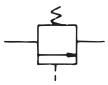	
Proportional electromagnetic pressure control valve		

5. Flow rate control valve

Name	Symbol	Remarks
Metering valve Variable metering valve	Detailed symbol Simplified symbol 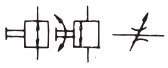	· The simplified symbols do not indicate the operation method or valve state. · Normally, there is no completely closed status
Stop valve		
Speed control valve		· Variable metering valve · One direction is free flow, while the other direction is controlled flow
Metering valve		
Metering valve with silencer	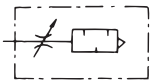	

6. Cylinder and motor

Name	Symbol	Remarks
Single acting cylinder	Detailed symbol Simplified symbol 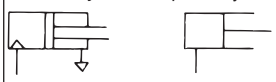	· Push type · Single rod · Exhaust to atmosphere
Single acting cylinder (with spring)	(1) (2) 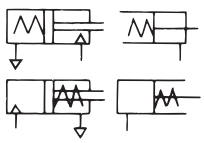	· Single rod (1) Rod pushed by spring force (2) Rod retracted by spring force
Double acting cylinder	(1) (2) 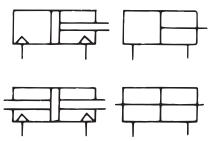	(1) Single rod (2) Double rod
Double acting telescopic cylinder	◎ 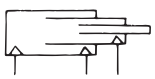	
Cylinder with adjustable stroke (head side) Cylinder with adjustable stroke (rod side)	◎ 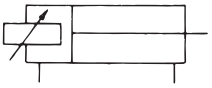 ◎ 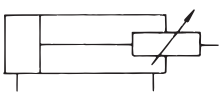	Reference In accordance with JIS B 8368 usage. In JIS B 0142:1984, the head side is the cap side and the rod side is the head side.
Cylinder with speed control valve	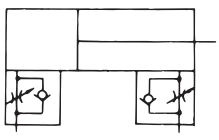	· Example of meter-out

Name	Symbol	Remarks
Cylinder with brake	◎ 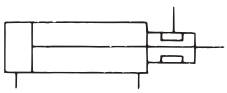	· Describe the braking method if required.
Cylinder with end lock	(1)◎ 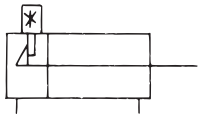 (2)◎ 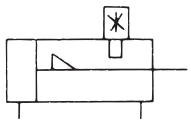	* Symbol showing how to release (1) Head side (2) Rod side Note: In accordance with JIS B 8368:1999 usage.
Cylinder with switch	◎ 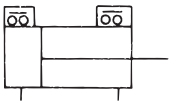	· Specify a and b contacts 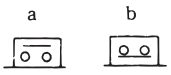
Rotation-stop cylinder	◎ 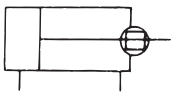	
Rodless cylinder	◎ 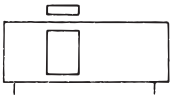	
Cylinder with valve	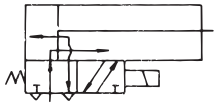	· Example of push type during energizing
Air motor	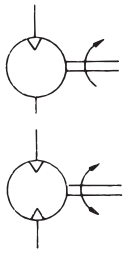	· 1-direction flow · 1 direction rotation · 2-direction flow · 2 direction rotation
Oscillating actuator	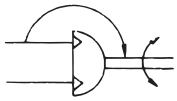	· Pneumatic pressure · Constant angle · 2-direction oscillation · Drawings of arrows to indicate relationship of the shaft rotating direction and flow direction are optional.

7. Power and tank

Name	Symbol	Remarks
Hydraulic (power) source		· General symbols
Pneumatic (power) source		· General symbols
Electric motor		

Name	Symbol	Remarks
Driving motor		(Excluding electric motor)
Air receiver		

8. Air adjustment component

Name	Symbol	Remarks
Filter	(1) 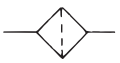 (2)  (3) 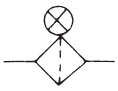	(1) General symbols (2) With magnet (3) With clogging display
Filter with drain discharger	(1)  (2) 	(1) Manual discharge (2) Automatic discharge
Oil mist separator	(1) 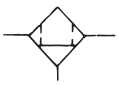 (2) 	(1) Manual discharge (2) Automatic discharge
Micro mist separator	(1) ◎  (2) ◎ 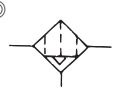 (3) ◎ 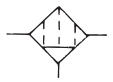	(1) Manual discharge (2) Automatic discharge (3) Deodorization filter
Drain discharger	(1)  (2) 	(1) Manual discharge (2) Automatic discharge
Air dryer		
Heat exchanger Cooler	(1)  (2)  (3) 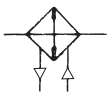	(1) Water cooling (when coolant piping path is not displayed) (2) Water cooling (when coolant piping path is displayed) (3) Air cooling

Name	Symbol	Remarks
Lubricator		All volume Selection
Pneumatic adjustment unit	Simplified symbol 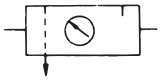 Detailed symbol 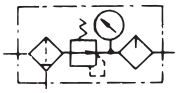	The vertical arrow indicates a discharger. Detailed symbol shows · Filter with manual exhaust valve · Non-relief regulator · An example of the all-volume lubricator
Oil mist separator for exhaust	◎ 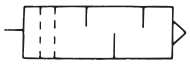	
Noise reduction device	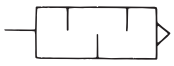	
Oil injector	◎ 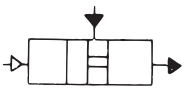	

9. Auxiliary components and other components

Name	Symbol	Remarks
Pneumatic - hydraulic converter	(1) 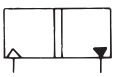 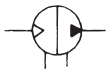	(1) Single acting (2) Continuous type
Booster	(1) 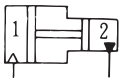 (2) 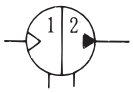	· For pressure ratio 1:2 · For Class 2 fluids (1) Single acting (2) Continuous type
Booster valve	◎ 	Pressure ratio 1:2
Delay valve	(Example) 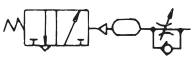	· Indicate with a compound symbol based on the mechanism
Buzzer	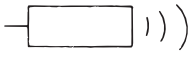	
Pressure switch	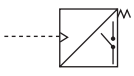	Can be indicated as follows if there is no chance for it to be misread: 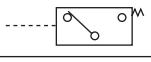

Name	Symbol	Remarks
Limit switch	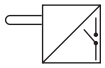	Can be indicated as follows if drawing could not be misread: 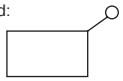
Air ejector	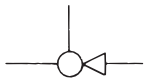	· As defined in JIS Z 8207
Pneumatic counter	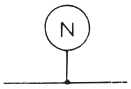	
Pressure display		· Simple display without measurement
Pressure gauge		
Differential pressure gauge		
Thermometer		
Galvanoscope		
Flow rate meter	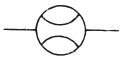	
Integrating flow gauge	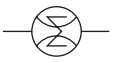	
Rotation speed gauge	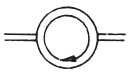	
Torque gauge	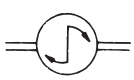	

(Refer to JISB0125-1:2001 and JPAS010)
Note: The ◎ mark indicates codes specific to JPAS010. Application is limited to those indicated.

CE Marking

CKD, with a wide range of EU Standards compliant components, supports customers' machine products to attain CE marking.



CE : Shown on EU Standards compliant products

What is CE Marking?

- CE Marking certifies that the product satisfies all EC Directive requirements to which it is applicable.
- CE Marking serves as a product passport that allows products with CE Marking to be freely distributed in EU countries.
- Machines exported to the EU must comply with Machinery Directives, EMC Directives and Low-Voltage Directives, etc. In principle, CE Marking must be indicated on the final product marketed; therefore, as a rule, built-in components do not require CE Markings. If compliance of built-in parts (CKD products) with EU Standards can be verified, CE Marking of the final product (customer's machine product) can be easily obtained.

Applicable EC Directives

CKD's main components, such as solenoid valves, sensors, and direct drive actuator, are called on to comply with the Directives below. Many models already comply with EU Standards.

Machinery Directive (2006/42/EC)	Requirements on safety for machinery	■ Machines with drive sections Components such as solenoid valves are not subject to this compliance, but the user can obtain CE Marking certification more easily by complying with Standards.
EMC Directive (2014/30/ EU)	Electromagnetic interference generation (EMI emission) and electromagnetic interference elimination performance countermeasures (EMS immunity)	■ Devices generating electromagnetic interference or affected by electromagnetic interference Solenoid valves composed of a simple solenoid are not affected by electromagnetic interference, but the user can obtain CE Marking certification more easily by complying with Standards.
Low-Voltage Directive (2014/35/EU)	Electrical safety with regard to electric shock, etc.	■ Devices operating at 50 VAC to 1000 VAC and 75 VDC to 1500 VDC
Pressure Equipment Directive (2014/68/EU)	Safety regarding the dangers of fluid energy found in pressure equipment	■ When specific criteria are exceeded within pressure equipment
Simple Pressure Vessels Directive (2014/29/ EU)	Safety with regard to vessel leakage and explosion	■ Containers welded and for which total max. working pressure and volume (PV/S) exceeds 50 bar/liter The CKD air tank (AT) does not comply with this directive, and cannot be exported to the EU.
RoHS Directive (2011/65/ EU)	Environmentally active 6 restricted substances	■ Electrical and electronics devices
2011/65/EU and (EU)2015/863	Environmentally active 10 restricted substances	■ Electrical and electronics devices

CE marking is applicable for the European Union (EU) countries and European Free Trade Association (EFTA) countries, in addition to Turkey.

CKD product conformity to EU standards

⚠ Depending on specifications and detailed model No. combinations, compatible parts may not be available. Contact your CKD Sales Representative for details.
Visit our website for the latest information.
Website address https://www.ckd.co.jp/en//support/eu/

CKD RoHS Compliance

CKD's target is to develop environmentally friendly products.

RoHS

RoHS is the abbreviation for Restriction of the use of certain Hazardous Substances in electrical and electronic equipment.
This is the directive prohibiting use of certain hazardous substances issued by the EU.



- CKD products are approved as in conformity to RoHS directives in order of priority from July 1, 2006.
- RoHS-compliant products are designed to reduce environmental load and can be distributed in the EU countries.

CKD Environment Policy

Based on the CKD Environment Policy enacted in 2001, CKD has been promoting company-wide environment management activities to protect the global environment.

CKD Environment Policy

1. Development and sales of low-environmental load products
2. Reduction of environmental pollutants
3. Promotion of energy and resource saving
4. Reduction of waste

CKD's Compliance with RoHS

From July 2006, we have sequentially enforced RoHS compliance of our Component's major products. This catalog shows RoHS-compliant products with the "RoHS-compliant" mark.

(Note) Check our website for the latest status.

Technical data

RoHS Directive

(Directive 2011/65/EU of 27 January 2003 on the restriction of the use of certain hazardous substances in electrical and electronic equipment)

This directive assimilates laws related to limiting the use of hazardous substances in electrical and electronics components set forth by each EU member state, contributes to the protection of human health, and provides sufficient means for processing and recycling waste electrical and electric products.

1 Scope of application

1. Large appliances
2. Small appliances
3. IT equipment and telecommunications equipment
4. Consumer equipment
5. Lighting equipment
6. Electric tools
7. Toys, leisure goods and sporting equipment
8. Medical equipment and in-vitro diagnostic medical equipment
9. Monitoring and control equipment, industrial monitoring and control equipment
10. Vending machines
11. Other electrical and electronic equipment not in the above categories

Our equipment products mainly correspond to category 9: Industrial monitoring and control equipment.
(Some category 8 medical devices and non-applicable products are available)

2 Objective

Restricted substances 2011/65/EU

- Lead, mercury, cadmium, hexavalent chromium, polybrominated biphenyls (PBBs)
- Polybrominated diphenyl ethers (PBDEs)

Substances subject to additional regulation ((EU)2015/863)

- Specified phthalates (DEHP, DBP, BBP, DIBP)

As a general rule, categories 8 and 9 electrical and electronic equipment containing any of the above may not be brought into the EU from July 22, 2021 on, and those in other categories likewise from July 22, 2019 on.

ISO9001/ISO14001 Certification

Providing safe quality, friendly to users, machines and environment.

CKD has acquired International Standard ISO9001 and ISO14001 certification and structured a quality and environment management system.
With safety, environment and energy conservation as our most important priorities, we are working company-wide to promote safe product and quality creation friendly to users, machines, society and the global environment.





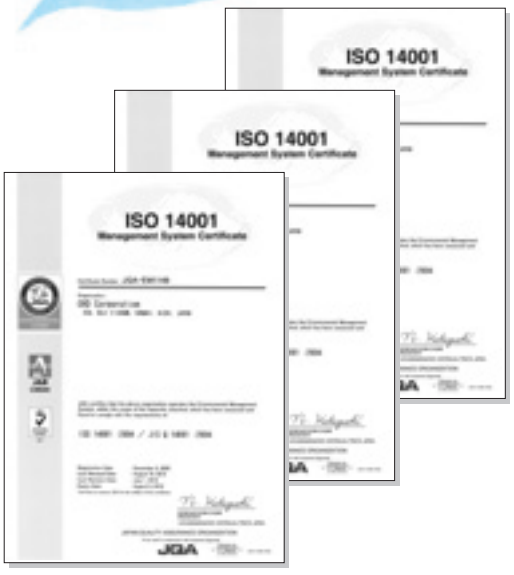

International Standard ISO9001 Certification

International Standard for quality management systems.

CKD's production division acquired certification in 1994, and all CKD divisions, including the sales division, acquired certification in 2007.

Approach to quality system

To respond to diverse product needs, CKD develops user-friendly products individualized for each industry. We conduct quality management activities to increase customer satisfaction.



International Standard ISO14001 Certification

International Standard for environment management systems. CKD's production division acquired certification in 2000, and all CKD divisions, including the sales division, acquired certification in 2003.

Approach to environment and energy conservation

CKD is aware that preserving the global environment is an utmost priority. We conduct environmental management activities based on the CKD Environment Policy.

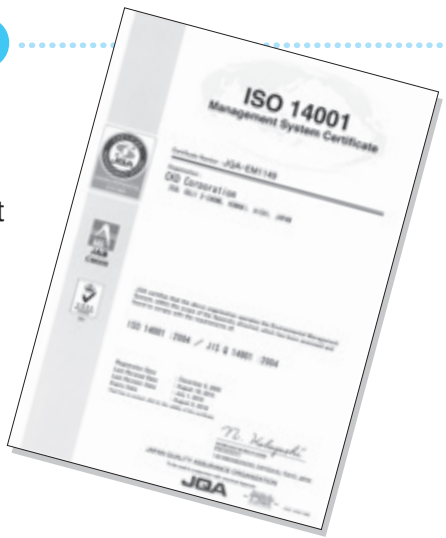

MEMO

MEMO

MEMO

MEMO

MEMO

MEMO

MEMO

MEMO

Model No. [index in alphabetical order]

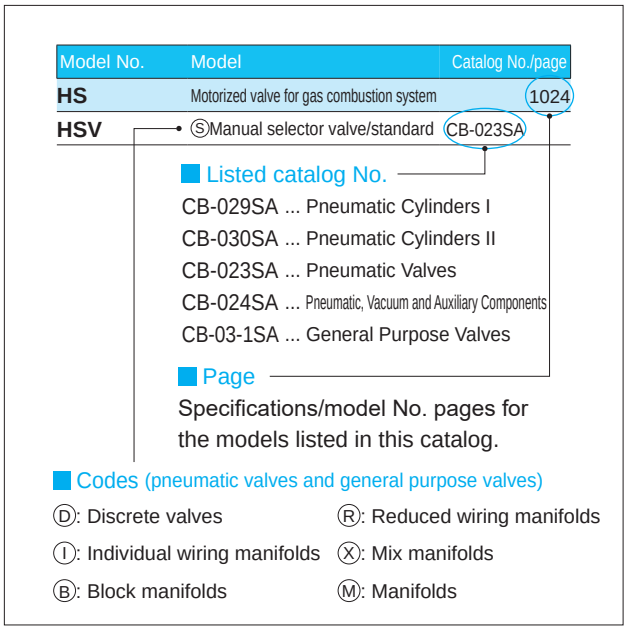

Model No.	Model	Catalog No./page
1		
1219	Micro alescer/micro naught (oil removal)	416
1238	Micro alescer/micro naught (oil removal)	452
1326	Heavy duty air filter	448
1126 -*-*Y	Submicron air filter (for tar removal)	450
1126-*-E	Air filter	444
1138 -*-*Y	Submicron air filter (for tar removal)	450
1138-*-E	Air filter	444
1226 (J)	Micro alescer/micro naught (oil removal)	452
1226 (J) -*-X	Micro alescer/odor naught (odor removing)	454
1238-*-X	Micro alescer/odor naught (odor removing)	454
1326 -*-*Y	Submicron air filter (for tar removal)	450
2		
2215	Regulator	458
2216	Regulator	458
2302 to 2304-*C	Dial air regulator	464
2302 to 2304-*C-R	Remote dial air regulator	467
2415	Reverse regulator (check valve integrated)	462
2419	Reverse regulator (check valve integrated)	420
2619	Regulator	570
2QV	Quick valve with push-in fitting	188
3		
3003E to 3005E	Lubricator/econo-mist	470
3003E-*C-V	Lubricator/auto-fill	474
3GA1/2/3	ⒹPilot operated 3-port valve/ body piping	CB-023SA
3GA1/2/3	ⒹPilot operated 3-port valve (Master valve)/body piping	CB-023SA
3GB1/2	ⒹPilot operated two 3-port valves integrated/base piping	CB-023SA
3GD1/2/3	ⒹPilot operated 3-port valve/ body piping	CB-023SA
3GE1/2	ⒹPilot operated two 3-port valves integrated/base piping	CB-023SA
3KA1	ⒹPilot operated 3-port valve/ body piping	CB-023SA
3KA1	ⒹPilot operated 3-port valve (Master valve)/body piping	CB-023SA
3MA0	ⒹDirect acting 3-port valve/ Body piping	CB-023SA
3MB0	ⒹDirect acting 3-port valve/ Sub-plate piping	CB-023SA
3PA1/2	ⒹDirect acting 3-port valve/ Body piping	CB-023SA
3PB1/2	ⒹDirect acting 3-port valve/ Sub-plate piping	CB-023SA
3QB	Direct acting 3-port valve	CB-023SA
3QRA	ⒹDirect acting 3-port valve/ Body piping	CB-023SA
3QRB	ⒹDirect acting 3-port valve/ Sub-plate piping	CB-023SA
3QV	Quick valve with push-in fitting	188
4		
4001, 4002	Desiccant air dryer/ Manual air dryer	1803
46011	Urethane tube	1334
4F0/1/2/3	ⒹPilot operated 5-port valve/ body piping	CB-023SA

4F0/1/2/3	ⒹPilot operated 5-port valve (Master valve)/body piping	CB-023SA
4F2/3	ⒹPilot operated 5-port valve, outdoor type	CB-023SA
4F30EX**	ⒹExplosion-proof pilot operated 5-port valve/body piping	CB-023SA
4F30E**	ⒹExplosion-proof pilot operated 5-port valve/body piping	CB-023SA
4F4/5/6/7	ⒹPilot operated 5-port valve/ sub-plate piping	CB-023SA
4F4/5/6/7	ⒹPilot operated 5-port valve (Master valve)/sub-plate piping	CB-023SA
4F4/5/6/70EX**	ⒹExplosion-proof pilot operated 5-port valve/body piping	CB-023SA
4F4/5/6/70E**	ⒹExplosion-proof pilot operated 5-port valve/sub-plate piping	CB-023SA
4GA1/2/3	ⒹPilot operated 5-port valve/ body piping	CB-023SA
4GA1/2/3	ⒹPilot operated 5-port valve (Master valve)/body piping	CB-023SA
4GA4	ⒹPilot operated 5-port valve/ body piping	CB-023SA
4GB1/2/3	ⒹPilot operated 5-port valve/ base piping	CB-023SA
4GB1/2/3	ⒹPilot operated 5-port valve (Master valve)/base piping	CB-023SA
4GB4	ⒹPilot operated 5-port valve/ base piping	CB-023SA
4GD1/2/3	ⒹPilot operated 5-port valve/ body piping	CB-023SA
4GE1/2/3	ⒹPilot operated 5-port valve/ base piping	CB-023SA
4KA1/2/3/4	ⒹPilot operated 5-port valve Body piping	CB-023SA
4KA1/2/3/4	ⒹPilot operated 5-port valve (Master valve)/body piping	CB-023SA
4KB1/2/3/4	ⒹPilot operated 5-port valve/ sub-plate piping	CB-023SA
4KB1/2/3/4	ⒹPilot operated 4, 5-port valve (Master valve)/sub-plate piping	CB-023SA
4L2-4	Ⓓ5-port valve	CB-023SA
4SA0	ⒹPilot operated 5-port valve/ body piping	CB-023SA
4SB0	ⒹPilot operated 5-port valve/ sub-plate piping	CB-023SA
4TB3/4	ⒹPilot operated 5-port valve	CB-023SA

5

5100-4C	Heavy duty drain	1922

6

6119	Moisture indicator	379

A

A	Marine cable gland	CB-03-1SA
A100 to 800-W	Pipe adaptor/Standard White Series	350
A101 to 801-W	Radial pipe adaptor/Standard White Series	351
A1019	Air filter	414
A1338	Heavy duty air filter	448
A1338-*Y	Submicron air filter (for tar removal)	450
A2-3400	Ultra-low temperature 2-port solenoid valve	CB-03-1SA
A2-5201	Direct acting 2-port solenoid valve (for high frequency of use)	CB-03-1SA
A2-5202	Pilot operated 2-port solenoid valve (for high frequency of use)	CB-03-1SA
A2-5800	Ultra-low temperature 2-port solenoid valve	CB-03-1SA
A2-6500	Proportional control valve	CB-03-1SA
A3019	Lubricator/econo-mist	424
AB21	Direct acting 2-port solenoid valve (General purpose)	CB-03-1SA
AB31	Direct acting 2-port solenoid valve, single unit (General purpose)	CB-03-1SA
AB31-Z	Direct acting 2-port solenoid valve for dry air (General purpose)	CB-03-1SA
AB41	Direct acting 2-port solenoid valve, single unit (General purpose)	CB-03-1SA
AB41E2	Explosion-proof direct acting 2-port solenoid valve (General purpose)/d2G2	CB-03-1SA
AB41E4	Explosion-proof direct acting 2-port solenoid valve (General purpose)/d2G4	CB-03-1SA
AB41E4-Z	Explosion-proof direct acting 2-port solenoid valve for dry air (General purpose)/d2G4	CB-03-1SA
AB41EX2	Explosion-proof direct acting 2-port solenoid valve (General purpose)/Exd II BT2	CB-03-1SA
AB41EX4	Explosion-proof direct acting 2-port solenoid valve (General purpose)/Exd II BT4	CB-03-1SA
AB41-Z	Direct acting 2-port solenoid valve for dry air (General purpose)	CB-03-1SA

Model No. [index in alphabetical order]

Model No.	Model	Catalog No./page
A		
AB42	Direct acting 2-port solenoid valve, single unit (General purpose)	CB-03-1SA
AB42E4	Explosion-proof direct acting 2-port solenoid valve (General purpose)/d2G4	CB-03-1SA
AB71	Direct acting 2-port solenoid valve (General purpose)/Large bore size	CB-03-1SA
ABP	Air booster	678
AD11	Pilot operated 2-port solenoid valve (General purpose)/Diaphragm drive	CB-03-1SA
AD11E4	Explosion-proof pilot operated 2-port solenoid valve (General purpose)/Diaphragm drive/d2G4	CB-03-1SA
AD11EX4	Explosion-proof pilot operated 2-port solenoid valve (General purpose)/Diaphragm drive/Exd II BT4	CB-03-1SA
AD12	Pilot operated 2-port solenoid valve (General purpose)/diaphragm drive	CB-03-1SA
AD12E4	Explosion-proof pilot operated 2-port solenoid valve (General purpose)/diaphragm drive/d2G4	CB-03-1SA
AD21	Pilot operated 2-port solenoid valve (General purpose)/Diaphragm drive	CB-03-1SA
AD21E4	Explosion-proof pilot operated 2-port solenoid valve (General purpose)/diaphragm drive/d2G4	CB-03-1SA
AD21EX4	Explosion-proof pilot operated 2-port solenoid valve (General purpose)/Diaphragm drive/Exd II BT4	CB-03-1SA
AD22	Pilot operated 2-port solenoid valve (General purpose)/Diaphragm drive	CB-03-1SA
AD22E4	Explosion-proof pilot operated 2-port solenoid valve (General purpose)/Diaphragm drive/d2G4	CB-03-1SA
ADK11	Pilot kick operated 2-port solenoid valve (General purpose)/Diaphragm drive	CB-03-1SA
ADK11-W	Pilot kick operated 2-port solenoid valve (General purpose)/Diaphragm drive/Outdoor Series	CB-03-1SA
ADK11E4	Explosion-proof pilot kick operated 2-port solenoid valve (General purpose)/diaphragm drive/d2G4	CB-03-1SA
ADK11EX4	Explosion-proof pilot operated 2-port solenoid valve (General purpose)/Diaphragm drive/Exd II BT4	CB-03-1SA
ADK11-Z	Pilot kick 2-port solenoid valve for dry air (General purpose)	CB-03-1SA
ADK12	Pilot kick operated 2-port solenoid valve (General purpose)/diaphragm drive	CB-03-1SA
ADK12E4	Explosion-proof pilot kick operated 2-port solenoid valve (General purpose)/diaphragm drive/d2G4	CB-03-1SA
ADK21	Pilot kick operated 2-port solenoid valve (General purpose)/diaphragm drive	CB-03-1SA
AF2-P**	Medium main line filter/ Solids/oil removing filter	1845
AF2-M**	Medium main line filter/High-perf. solids/ oil removing filter	1845
AF2-X**	Medium main line filter/ Odor removing filter	1845
AF3016M to 3256M	Large main line filter (popular)/ High-performance oil removing filter	1874
AF3016P to 3256P	Large main line filter (popular)/Pre-filter	1870
AF3016S to 3256S	Large main line filter (popular)/Oil removing filter	1872
AF3016X to 3256X	Large main line filter (popular)/ Activated carbon filter	1876
AF4004M to AF4020M	Medium main line filter (oil-prohibited)/ High-performance oil removing filter	1855
AF4004P to AF4020P	Medium main line filter (oil-prohibited)/Pre-filter	1855
AF4004S to AF4020S	Medium main line filter (oil-prohibited)/ Solid removing filter	1855
AF4004X to AF4020X	Medium main line filter (oil-prohibited)/ Odor removing filter	1855
AF5016M to 5256M	Large main line filter (oil-prohibited)/ High-performance oil removing filter	1892
AF5016P to 5256P	Large main line filter (oil-prohibited)/Pre-filter	1884
AF5016S to 5256S	Large main line filter (oil-prohibited)/Oil removing filter	1888
AF5016X to 5256X	Large main line filter (oil-prohibited)/Activated carbon filter	1896
AG3*-Z	Direct acting 3-port solenoid valve for dry air (General purpose)	CB-03-1SA
AG31	Direct acting 3-port solenoid valve, single unit (General purpose)	CB-03-1SA
AG33	Direct acting 3-port solenoid valve, single unit (General purpose)	CB-03-1SA
AG34	Direct acting 3-port solenoid valve, single unit (General purpose)	CB-03-1SA
AG4*E4-Z	Explosion-proof direct acting 3-port solenoid valve for dry air (General purpose)/d2G4	CB-03-1SA
AG4*-Z	Direct acting 3-port solenoid valve for dry air (General purpose)	CB-03-1SA
AG41	Direct acting 3-port solenoid valve, single unit (General purpose)	CB-03-1SA
AG41E4	Explosion-proof direct acting 3-port solenoid valve (General purpose)/d2G4	CB-03-1SA

AG41EX4	Explosion-proof direct acting 3-port solenoid valve (General purpose)/Exd II BT4	CB-03-1SA
AG43	Direct acting 3-port solenoid valve, single unit (General purpose)	CB-03-1SA
AG43E4	Explosion-proof direct acting 3-port solenoid valve (General purpose)/d2G4	CB-03-1SA
AG43EX4	Explosion-proof direct acting 3-port solenoid valve (General purpose)/Exd II BT4	CB-03-1SA
AG44	Direct acting 3-port solenoid valve, single unit (General purpose)	CB-03-1SA
AG44E4	Explosion-proof direct acting 3-port solenoid valve (General purpose)/d2G4	CB-03-1SA
AG44EX4	Explosion-proof direct acting 3-port solenoid valve (General purpose)/Exd II BT4	CB-03-1SA
AGD0*R	Air operated valve for process gas	CB-03-1SA
AGD1/2*R	Air operated valve for process gas	CB-03-1SA
AHB	Air hydraulic booster	CB-029SA
AL	Air lamp/logic valve	1645
AM4F0	ⓘPilot operated 5-port valve/ body piping	CB-023SA
AMD	Air operated valve for chemical liquids (2-port)	CB-03-1SA
AMD0*3R	Air operated valve for chemical liquids (2-port)	CB-03-1SA
AMD3*3R	Air operated valve for chemical liquids (2-port)	CB-03-1SA
AMD4*3R	Air operated valve for chemical liquids (2-port)	CB-03-1SA
AMD5*3R	Air operated valve for chemical liquids (2-port)	CB-03-1SA
AMD2**	Air operated valve for chemical liquids (2-port)	CB-03-1SA
AMDS	Air operated valve for chemical liquids/drip prevention valve integrated	CB-03-1SA
AMDZ*3R	Air operated valve for chemical liquids (2-port)	CB-03-1SA
AMG	Air operated valve for chemical liquids (3-port)	CB-03-1SA
AMGZ03R	Air operated valve for chemical liquids (3-port valve)	CB-03-1SA
AMS	Drip prevention valve for chemical liquids	CB-03-1SA
AP11	Pilot operated 2-port solenoid valve (General purpose)/Piston drive	CB-03-1SA
AP11E2	Explosion-proof pilot operated 2-port solenoid valve (General purpose)/piston drive/d2G2	CB-03-1SA
AP11E4	Explosion-proof pilot operated 2-port solenoid valve (General purpose)/piston drive/d2G4	CB-03-1SA
AP11EX2	Explosion-proof pilot operated 2-port solenoid valve (General purpose)/piston drive/Exd II BT2	CB-03-1SA
AP11EX4	Explosion-proof pilot operated 2-port solenoid valve (General purpose)/piston drive/Exd II BT4	CB-03-1SA
AP12	Pilot operated 2-port solenoid valve (General purpose)/Piston drive	CB-03-1SA
AP12E2	Explosion-proof pilot operated 2-port solenoid valve (General purpose)/piston drive/d2G2	CB-03-1SA
AP12E4	Explosion-proof pilot operated 2-port solenoid valve (General purpose)/piston drive/d2G4	CB-03-1SA
AP21	Pilot operated 2-port solenoid valve (General purpose)/Piston drive	CB-03-1SA
AP21E2	Explosion-proof pilot operated 2-port solenoid valve (General purpose)/piston drive/d2G2	CB-03-1SA
AP21EX2	Explosion-proof pilot operated 2-port solenoid valve (General purpose)/piston drive/Exd II BT2	CB-03-1SA
AP21E4	Explosion-proof pilot operated 2-port solenoid valve (General purpose)/piston drive/d2G4	CB-03-1SA
AP21EX4	Explosion-proof pilot operated 2-port solenoid valve (General purpose)/piston drive/Exd II BT4	CB-03-1SA
AP22	Pilot operated 2-port solenoid valve (General purpose)/Piston drive	CB-03-1SA
AP22E2	Explosion-proof pilot operated 2-port solenoid valve (General purpose)/piston drive/d2G2	CB-03-1SA
AP22E4	Explosion-proof pilot operated 2-port solenoid valve (General purpose)/piston drive/d2G4	CB-03-1SA
APA1	Pel system/Switching element	1318
APA3	Pel system/ Switching element/manifold	1318
APA4	Pel system/detection nozzle	1321
APA6	Piping instrument/air sensor	1334
APE	Mechanical pressure switch	172
APK11	Pilot kick operated 2-port solenoid valve (General purpose)/Piston drive	CB-03-1SA
APK21	Pilot kick operated 2-port solenoid valve (General purpose)/Piston drive	CB-03-1SA
APS	Compact mechanical pressure switch	176
AT	Air tank	
AVB3**	Air operated valve for high vacuum	CB-03-1SA
AVB7**	Air operated valve for high vacuum	CB-03-1SA
AZ	Tube cutter	902

■ Listed catalog No.

CB-029SA...Pneumatic Cylinders I CB-024SA ...Pneumatic, Vacuum and Auxiliary Components
CB-030SA...Pneumatic Cylinders II CB-03-1SA ...General Purpose Valves
CB-023SA...Pneumatic Valves

■ Codes (pneumatic valves and general purpose valves)

Ⓓ...Discrete valves Ⓡ...Reduced wiring manifolds
ⓘ...Individual wiring manifolds Ⓧ...Mix manifolds
Ⓑ...Block manifolds Ⓜ...Manifolds

Model No. [index in alphabetical order]

Model No.	Model	Catalog No./page
B		
B	Booster	CB-029SA
B*P51*	Ⓘ Pilot operated 2, 3, 5-port valve/metal base	CB-023SA
B110 to 820-W	Bracket/for modular F.R.L./Standard White Series	346
B2019	Regulator	418
B512*	Ⓓ Pilot operated 2-port valve/sub-base	CB-023SA
B513*	Ⓓ Pilot operated 3-port valve/sub-base	CB-023SA
B5142	Ⓓ Pilot operated 5-port valve/sub-base	CB-023SA
B6061	Relief valve	422
B7019	F.R. unit	412
BBS-A	Balancer unit, automatic pressure adjustment	CB-030SA
BBS-O	Balancer unit, fixed pressure adjustment	CB-030SA
BHA	Compact cross roller parallel hand	CB-030SA
BHA-FC	Mechanical hand	CB-030SA
BHA-LN	Hand with length measuring sensor/Cross roller parallel hand with sensor	CB-030SA
BHE	Centering hand	CB-030SA
BHE-LN	Hand with length measuring sensor/Centering hand with sensor	CB-030SA
BHG	Compact cross roller parallel hand with rubber cover	CB-030SA
BHG-LN	Hand with length measuring sensor/Rubber covered cross roller parallel hand with sensor	CB-030SA
BN	Air blow nozzle General	926
BNB	Air blow nozzle Blower specification	927
BNE-F	Air blow nozzle Flat	924
BNE-R	Air blow nozzle Round	924
BSA2	Miniature cross roller parallel hand	CB-030SA
BW7019	Filter/Regulator Outdoor Series	328
C		
C1000 to 8000-P6	F.R.L. combination/copper and PTFE free series	312
C1000 to 8000-W	F.R.L. combination/Standard White Series	34
C1010 to 8010-W	W.L. combination/Standard White Series	42
C1020 to 8020-W	F.R. combination/Standard White Series	48
C1030 to 8030-W	F.M.R. combination/Standard White Series	54
C1040 to 8040-W	W.M. combination/Standard White Series	60
C1050 to 8050-W	R.M. combination/Standard White Series	66
C1060 to 8060-W	F.M. combination/Standard White Series	72
C25N-B	Governor for medium pressure gas	CB-03-1SA
C3070 to 8070-W	F.F.M. combination/Standard White Series	78
CAC4	Clamp cylinder/double acting/single rod	CB-030SA
CAC4-G4	Clamp cylinder/Double acting/anti-spatter adherence	CB-030SA
CAC-N32/40	Lightweight clamp cylinder/Double acting/single rod	CB-030SA
CAT	Cartridge cylinder/single acting, push type	CB-029SA
CAU30	Clean air unit	936
CAV2	Cylinder with valve/double acting/lubrication	CB-029SA
CAV2-N	Cylinder with valve/double acting/no-lubrication	CB-029SA
CCH	Coolant check valve	CB-03-1SA
CG	Fiber tube push-in fitting (clean-room)	890
CHB	Air operated 2-port ball valve (compact rotary valve)/double acting	CB-03-1SA
CHBF	Air operated 2-port ball valve (compact rotary valve)/double acting/full bore	CB-03-1SA
CHBF-R*	Air operated 2-port ball valve (compact rotary valve)/single acting/full bore	CB-03-1SA
CHBF-V*	Air operated 2-port ball valve (compact rotary valve)/With solenoid valve/double acting/full bore	CB-03-1SA
CHBF-X*	Air operated 2-port ball valve (compact rotary valve)/With solenoid valve/single acting/full bore	CB-03-1SA
CHB-R*	Air operated 2-port ball valve (compact rotary valve)/single acting	CB-03-1SA
CHB-V*	Air operated 2-port ball valve (compact rotary valve)/With solenoid valve/double acting	CB-03-1SA
CHB-X*	Air operated 2-port ball valve (compact rotary valve)/With solenoid valve/single acting	CB-03-1SA
CHB-W	Air operated 2-port ball valve (compact rotary valve)/double acting/Outdoor Series	CB-03-1SA
CHB-WR*	Air operated 2-port ball valve (compact rotary valve)/single acting/Outdoor Series	CB-03-1SA
CHB-WV1	Air operated 2-port ball valve (compact rotary valve)/With solenoid valve/double acting / Outdoor Series	CB-03-1SA
CHB-WX1	Air operated 2-port ball valve (compact rotary valve)/With solenoid valve/single acting / Outdoor Series	CB-03-1SA
CHC	Auto hand changer	CB-030SA

CHG	Air operated 3-port ball valve (compact rotary valve)/double acting	CB-03-1SA
CHG-R*	Air operated 3-port ball valve (compact rotary valve)/single acting	CB-03-1SA
CHG-V*	Air operated 3-port ball valve (compact rotary valve)/With solenoid valve/double acting	CB-03-1SA
CHG-X*	Air operated 3-port ball valve (compact rotary valve)/With solenoid valve/single acting	CB-03-1SA
CHG-W	Air operated 3-port ball valve (compact rotary valve)/double acting/Outdoor Series	CB-03-1SA
CHG-WR*	Air operated 3-port ball valve (compact rotary valve)/single acting/Outdoor Series	CB-03-1SA
CHG-WV1	Air operated 3-port ball valve (compact rotary valve)/With solenoid valve/double acting / Outdoor Series	CB-03-1SA
CHG-WX1	Air operated 3-port ball valve (compact rotary valve)/With solenoid valve/single acting / Outdoor Series	CB-03-1SA
CHL	Check valve with push-in fitting	798
CHV2	Check valve	800
CK	3-way finger long stroke chuck	CB-030SA
CKA	3-way finger thin chuck	CB-030SA
CKF	Hollow chuck	CB-030SA
CKG	3-way finger bearing chuck	CB-030SA
CKH2	Powerful chuck with high gripping power	CB-030SA
CKJ	Ultra long stroke chuck	CB-030SA
CKL2	Powerful chuck	CB-030SA
CKL2-*-HC	Position locking powerful chuck	CB-030SA
CKL2-FC	Mechanical chuck	CB-030SA
CKLB2	2-way powerful chuck	CB-030SA
CKS	Thin chuck	CB-030SA
CKV2	Compact cylinder with valve/double acting/single rod	CB-029SA
CKV2-M	Compact cylinder with valve/double acting/rotation-stop	CB-029SA
CMA2	Medium bore size cylinder/double acting/single rod	CB-029SA
CMA2-E	Medium bore size cylinder/double acting/direct mounting	CB-029SA
CMK2	Small bore size cylinder/double acting/single rod	CB-029SA
CMK2-*C	Small bore size cylinder/double acting/rubber-air cushioned	CB-029SA
CMK2-B	Small bore size cylinder/double acting/back to back	CB-029SA
CMK2-C	Small bore size cylinder/double acting/air cushioned	CB-029SA
CMK2-D	Small bore size cylinder/double acting/double rod	CB-029SA
CMK2-F	Small bore size cylinder/double acting/fine speed	CB-029SA
CMK2-G2/G3	Small bore size cylinder/double acting/coolant proof	CB-029SA
CMK2-H	Small bore size cylinder/double acting/low hydraulic	CB-029SA
CMK2-M	Small bore size cylinder/double acting/rotation-stop	CB-029SA
CMK2-P	Small bore size cylinder/Double acting stroke adjustable push type	CB-029SA
CMK2-Q	Small bore size cylinder/double acting/position locking	CB-029SA
CMK2-R	Small bore size cylinder/Double acting/stroke adjustable/pull	CB-029SA
CMK2-S	Small bore size cylinder/single acting/push	CB-029SA
CMK2-SR	Small bore size cylinder/single acting/pull	CB-029SA
CMK2-T	Small bore size cylinder/double acting/heat resistance	CB-029SA
CMK2-Z	Small bore size cylinder/Double acting/built-in speed controller	CB-029SA
COV*2	Cylinder with valve/With valve/double acting/lubrication	CB-029SA
COV*2-N	Cylinder with valve/With valve/double acting/no-lubrication	CB-029SA
CPD	Electronic pressure switch for coolant (with digital display)	1342
CPE	Mechanical pressure switch for coolants (for low pressure)	1340
CSB	Air operated 2-port ball valve for steam (compact rotary valve)/standard bore	CB-03-1SA
CSBF	Air operated 2-port ball valve for steam (compact rotary valve)/full bore	CB-03-1SA
CSBF-R	Air operated 2-port ball valve for steam (compact rotary valve)/full bore	CB-03-1SA
CSB-R*	Air operated 2-port ball valve for steam (compact rotary valve)/standard bore	CB-03-1SA
CSB-W	Air operated 2-port ball valve for steam (compact rotary valve)/Standard bore/Outdoor Series	CB-03-1SA
CSB-WR*	Air operated 2-port ball valve for steam (compact rotary valve)/Standard bore/Outdoor Series	CB-03-1SA
CV3E	Air operated 3-port valve for low pressure (coolant valve)	CB-03-1SA
CVE2-05/10	Air operated 2-port valve for low pressure (coolant valve)	CB-03-1SA

■ Listed catalog No.

CB-029SA...Pneumatic Cylinders I CB-024SA ...Pneumatic, Vacuum and Auxiliary Components
CB-030SA...Pneumatic Cylinders II CB-03-1SA ...General Purpose Valves
CB-023SA...Pneumatic Valves

■ Codes (pneumatic valves and general purpose valves)

Ⓓ...Discrete valves Ⓡ...Reduced wiring manifolds
Ⓘ...Individual wiring manifolds Ⓧ...Mix manifolds
Ⓑ...Block manifolds Ⓜ...Manifolds

Model No. [index in alphabetical order]

Model No.	Model	Catalog No./page
C		
CVE2-16/30	Air operated 2-port valve for medium pressure (coolant valve)	CB-03-1SA
CVE22-05/10	Air operated 2-port valve for low pressure (coolant valve)	CB-03-1SA
CVE22-16/30	Air operated 2-port valve for medium pressure (coolant valve)	CB-03-1SA
CVE22-70	Air operated 2-port valve for high pressure (coolant valve)	CB-03-1SA
CVE2-70	Air operated 2-port valve for high pressure (coolant valve)	CB-03-1SA
CVE3-35/70	Air operated 3-port valve for medium and high pressure (coolant valve)	CB-03-1SA
CVS3E	Air operated 3-port valve for low pressure (coolant valve)/with solenoid valve	CB-03-1SA
CVSE2-05/10	Air operated 2-port valve for low pressure (coolant valve)/with solenoid valve	CB-03-1SA
CVSE2-15AX039	Air operated 2-port valve with solenoid valve (coolant control)/high pressure coolant valve	CB-03-1SA
CVSE2-16/30	Air operated 2-port valve for medium pressure (coolant valve) /with solenoid valve	CB-03-1SA
CVSE2-20AX040	Air operated 2-port valve with solenoid valve (coolant control)/high pressure coolant valve	CB-03-1SA
CVSE2-25AX041	Air operated 2-port valve with solenoid valve (coolant control)/high pressure coolant valve	CB-03-1SA
CVSE22-05/10	Air operated 2-port valve for low pressure (coolant valve)/with solenoid valve	CB-03-1SA
CVSE22-16/30	Air operated 2-port valve for medium pressure (coolant valve) /with solenoid valve	CB-03-1SA
CVSE22-70	Air operated 2-port valve for high pressure (coolant valve)/with solenoid valve	CB-03-1SA
CVSE2-70	Air operated 2-port valve for high pressure (coolant valve)/with solenoid valve	CB-03-1SA
CVSE3-35/70	Air operated 3-port valve for medium and high pressure (coolant valve)/With solenoid valve	CB-03-1SA
CXU	Air unit	947
D		
D101 to 801-W	Distributor/ For modular F.R.L./Standard White Series	348
DB1000	Automatic drain	1916
DB3000	Automatic drain	1916
DBS1006	Drain sensor	1919
DPS	Switch	1330
DSC	Speed controller with adjusting dial	694
DSG	Solenoid valve for gas combustion system	CB-03-1SA
DSG-W	Solenoid valve for gas combustion system	CB-03-1SA
DT3000, 3010-W	Automatic drain	1908
DT4000, 4010-W	Automatic drain	1908
DVL	Needle valve with adjusting dial	708
E		
E0, ET0	Cylinder switch/heat resistance/2-wire reed	CB-029SA
ECS	Electric actuator	CB-029SA
ECV	Electric actuator	CB-029SA
EH	Fiber tube clean-room type (For push-in fitting)	884
EMB21	Metal-free 2-port solenoid valve	CB-03-1SA
EMB41	Metal-free 2-port solenoid valve	CB-03-1SA
EMB51	Metal-free 2-port solenoid valve	CB-03-1SA
ETS	Electric actuator	CB-029SA
ETV	Electric actuator	CB-029SA
EV2100V, 2109V	Electro-pneumatic regulator/solenoid valve vacuum compatible	625
EVR	Electro-pneumatic regulator/solenoid valve medium flow rate	610
EVB*17	Electric vacuum valve	CB-03-1SA
EVD	Digital electro pneumatic regulator	586
EVL	Low pressure electro pneumatic regulator	630
EVS2	Compact electro pneumatic regulator/solenoid valve	622
EXA	Pilot operated 2-port solenoid valve for compressed air	CB-03-1SA
F		
F*	Soft nylon tube	906
F0V/H	Cylinder switch/1-color LED/reed 2-wire	CB-029SA
F1000 to 8000-P6	Air filter/copper and PTFE free series	315
F1000 to 8000-W	Air filter/Standard White Series	106
F2S, F3S	Cylinder switch/1-color LED/2, 3-wire proximity sensor	CB-029SA
F2, 3V/H	Cylinder switch/1-color LED/2, 3-wire proximity sensor	CB-029SA
F3PH/V	Cylinder switch/ PNP output 3-wire proximity sensor	CB-029SA
F2, 3Y V/H	Cylinder switch/2-color LED/2, 3-wire proximity sensor	CB-029SA
F3000 to 8000-G4	Air filter/flame-resistant series	266
FA*	Miniature fitting/adjustable socket	816
FA331 to 831	Exhaust cleaner	778

FAB	Direct acting 2-port solenoid valve for compressed air, single unit (Special purpose)	CB-03-1SA
FAC	Clean exhaust filter	554
FAG	Direct acting 3-port solenoid valve for compressed air/single unit (Special purpose)	CB-03-1SA
FBS	Miniature fitting/bush	816
FBU2	Magnetic spring buffer	1121
FC*	Miniature fitting/clamp fitting	816
FCD	Flat compact cylinder/double acting/single rod	CB-029SA
FCD-D	Flat compact cylinder/double acting/double rod	CB-029SA
FCD-K	Flat compact cylinder/double acting/cushioned	CB-029SA
FCH	Flat compact cylinder/single acting/pull	CB-029SA
FCK	Shock absorber/adjustable	CB-030SA
FCM	Compact flow rate controller	1496
FCS	Flat compact cylinder/single acting/push	CB-029SA
FCS1000	Inline clean filter	548
FCS500	Inline clean filter	544
FGB	Direct acting 2-port solenoid valve for dry air, single unit (Special purpose)	CB-03-1SA
FGB31	Noise reduction special purpose valve (2-port direct acting solenoid valve for compressed air/dry air)	CB-03-1SA
FGB41	Noise reduction special purpose valve (2-port direct acting solenoid valve for compressed air/dry air)	CB-03-1SA
FGG	Direct acting 3-port solenoid valve for dry air, single unit (Special purpose)	CB-03-1SA
FGS	Miniature fitting/gasket	816
FH100	Feather hand (mini-parallel hand)	CB-030SA
FH500	Feather hand (mini-fulcrum hand)	CB-030SA
FHB	Direct acting 2-port solenoid valve for hot water/single unit (Special purpose)	CB-03-1SA
FJ	Floating fitting	CB-030SA
FK	Simplified floating fitting	CB-030SA
FLB	Direct acting 2-port solenoid valve for oil/single unit (Special purpose)	CB-03-1SA
FLS	Miniature fitting/extension	816
FM*	Miniature fitting/manifold	816
FM3000 to 8000	Air filter/medium pressure series	296
FMD	Flow rate adjusting valve	CB-03-1SA
FMS	Metering valve with silencer	762
FNS	Miniature fitting/double screw nipple	816
FPL	Miniature fitting/plug	816
FPV	Block valve	802
FS*	Miniature fitting/socket	816
FSL100	Inline filter	406
FSL200	Inline filter	406
FSL500	Inline filter	406
FSM3	Compact flow rate sensor/integrated display/separated display	1367
FSM-V	Compact flow rate sensor/ Miniature analog output/switch output	1460
FSM-V	Miniature flow rate sensor	1460
FSM-V-D	Separated display	1460
FSM-VFM	Compact flow rate sensor/inline filter	1482
FSM-X	Miniature flow rate switch	1454
FT*	Miniature fitting/barbed fitting	816
FVB	Direct acting 2-port solenoid valve for medium vacuum/single unit (Special purpose)	CB-03-1SA
FWB	Direct acting 2-port solenoid valve for water/single unit (Special purpose)	CB-03-1SA
FWB31	Noise reduction special purpose valve (direct acting 2-port solenoid valve for water)	CB-03-1SA
FWB41	Noise reduction special purpose valve (direct acting 2-port solenoid valve for water)	CB-03-1SA
FWD	Compact pilot operated solenoid valve for water	CB-03-1SA
FWG	Direct acting 3-port solenoid valve for water, single unit (Special purpose)	CB-03-1SA
FWS	Miniature fitting/bulkhead	816
FW4000, 8000	Air filter Outdoor Series	330
FX	Drain separator	160

G

G29D	Miniature pressure gauge	374
G39D	Round pressure gauge	375
G401-W	Low-profile pressure gauge	364

■ Listed catalog No.

CB-029SA...Pneumatic Cylinders I CB-024SA ...Pneumatic, Vacuum and Auxiliary Components
CB-030SA...Pneumatic Cylinders II CB-03-1SA ...General Purpose Valves
CB-023SA...Pneumatic Valves

■ Codes (pneumatic valves and general purpose valves)

Ⓓ...Discrete valves Ⓡ...Reduced wiring manifolds
Ⓘ...Individual wiring manifolds Ⓧ...Mix manifolds
Ⓑ...Block manifolds Ⓜ...Manifolds

Model No. [index in alphabetical order]

Model No.	Model	Catalog No./page
G		
G40D	Pressure gauge with safety marker	365
G45D	Pressure gauge with limit marker	366
G49D, 59D	General-use pressure gauge	367
G49D, 59D-P6	Pressure gauge/copper and PTFE free series	320
G49D, G59D-P70, P9*	General purpose pressure gauge for clean room	368
G52D	Pressure gauge with switch	372
G53D	Pressure gauge for panel mounting	370
GA400	Differential pressure gauge	378
GAB312	Direct acting 2-port solenoid valve, manifold/actuator (General purpose)	CB-03-1SA
GAB312-Z	Direct acting 2-port solenoid valve for dry air, manifold/actuator (General purpose)	CB-03-1SA
GAB352	Direct acting 2-port solenoid valve, manifold/actuator (General purpose)	CB-03-1SA
GAB352-Z	Direct acting 2-port solenoid valve for dry air, manifold/actuator (General purpose)	CB-03-1SA
GAB412	Direct acting 2-port solenoid valve, manifold/actuator (General purpose)	CB-03-1SA
GAB412-Z	Direct acting 2-port solenoid valve for dry air, manifold/actuator (General purpose)	CB-03-1SA
GAB422	Direct acting 2-port solenoid valve, manifold/actuator (General purpose)	CB-03-1SA
GAB452	Direct acting 2-port solenoid valve, manifold/actuator (General purpose)	CB-03-1SA
GAB452-Z	Direct acting 2-port solenoid valve for dry air, manifold/actuator (General purpose)	CB-03-1SA
GAG31*	Direct acting 3-port solenoid valve, manifold/actuator (General purpose)	CB-03-1SA
GAG31*-Z	Direct acting 3-port solenoid valve for dry air, manifold/actuator (General purpose)	CB-03-1SA
GAG33*	Direct acting 3-port solenoid valve, manifold/actuator (General purpose)	CB-03-1SA
GAG33*-Z	Direct acting 3-port solenoid valve for dry air, manifold/actuator (General purpose)	CB-03-1SA
GAG34*	Direct acting 3-port solenoid valve, actuator (General purpose)	CB-03-1SA
GAG34*-Z	Direct acting 3-port solenoid valve for dry air, actuator (General purpose)	CB-03-1SA
GAG35*	Direct acting 3-port solenoid valve, manifold/actuator (General purpose)	CB-03-1SA
GAG35*-Z	Direct acting 3-port solenoid valve for dry air, manifold/actuator (General purpose)	CB-03-1SA
GAG41*	Direct acting 3-port solenoid valve, manifold/actuator (General purpose)	CB-03-1SA
GAG41*-Z	Direct acting 3-port solenoid valve for dry air, manifold/actuator (General purpose)	CB-03-1SA
GAG43*	Direct acting 3-port solenoid valve, manifold/actuator (General purpose)	CB-03-1SA
GAG43*-Z	Direct acting 3-port solenoid valve for dry air, manifold/actuator (General purpose)	CB-03-1SA
GAG44*	Direct acting 3-port solenoid valve, actuator (General purpose)	CB-03-1SA
GAG44*-Z	Direct acting 3-port solenoid valve for dry air, actuator (General purpose)	CB-03-1SA
GAG45*	Direct acting 3-port solenoid valve, manifold/actuator (General purpose)	CB-03-1SA
GAG45*-Z	Direct acting 3-port solenoid valve for dry air, manifold/actuator (General purpose)	CB-03-1SA
GAMD3R**	Air operated valve for chemical liquids (Manifold/branch valve)	CB-03-1SA
GASB	Ball valve for automatic emergency shutdown	CB-03-1SA
GAV	Low pressure gas combination valve	CB-03-1SA
GCVE2	Modular coolant valve/air operated	CB-03-1SA
GCVSE2	Modular coolant valve/with solenoid valve	CB-03-1SA
GEXA	Pilot operated 2-port solenoid valve for compressed air/push-in fitting manifold	CB-03-1SA
GFAB	Direct acting 2-port solenoid valve for compressed air, manifold (Special purpose)	CB-03-1SA
GFAG	Direct acting 3-port solenoid valve for compressed air, manifold (Special purpose)	CB-03-1SA
GFGB	Direct acting 2-port solenoid valve for dry air, manifold (Special purpose)	CB-03-1SA
GFGG	Direct acting 3-port solenoid valve for dry air, manifold (Special purpose)	CB-03-1SA
GFLB	Direct acting 2-port solenoid valve for oil, manifold (Special purpose)	CB-03-1SA
GFM	Glass float module	1071
GFVB	Direct acting 2-port solenoid valve for medium vacuum, manifold (Special purpose)	CB-03-1SA
GFWB	Direct acting 2-port solenoid valve for water, manifold (Special purpose)	CB-03-1SA
GFWG	Direct acting 3-port solenoid valve for water, manifold (Special purpose)	CB-03-1SA
GHV	Gas combination valve	CB-03-1SA
GLC	Guideless cylinder/double acting	CB-030SA
GMF1	ⓘPilot operated 5-port ISO valve/ DIN terminal box/ISO size (1)	CB-023SA

GMF1	ⓘPilot operated 5-port ISO valve/I/O connector/ISO size (1)	CB-023SA
GMF2	ⓘPilot operated 5-port ISO valve/ DIN terminal box/ISO size (2)	CB-023SA
GMF2	ⓘPilot operated 5-port ISO valve/I/O connector/ISO size (2)	CB-023SA
GMFZ	ⓧPilot operated 5-port ISO valve/ DIN terminal box/ISO size (1)/(2)	CB-023SA
GMFZ	ⓧPilot operated 5-port ISO valve/ I/O connector /ISO size (1)/(2)	CB-023SA
GNAB*	Air operated 2-port valve, manifold (Compact cylinder valve)	CB-03-1SA
GNAB*V	Air operated 2-port valve for low vacuum, manifold (Compact cylinder valve)	CB-03-1SA
GNAD*	Diaphragm cylinder valve, manifold	CB-03-1SA
GNAD*V	Diaphragm cylinder valve for low vacuum, manifold	CB-03-1SA
GPS2	Contact confirmation switch/single unit	1261
GPS3	Digital gap switch/single unit	1240
GRC	Table rotary actuator/ Basic	CB-030SA
GRC-F	Table rotary actuator/ Fine speed	CB-030SA
GRC-K	Table rotary actuator/ High accuracy	CB-030SA
GRC-KF	Table rotary actuator/ High accuracy/fine speed	CB-030SA
GSV	Solenoid valve for automatic watering control	CB-03-1SA
GSV2	Solenoid valve for automatic watering control	CB-03-1SA
GT9000	Refrigeration air dryer/ Air cooling/large standard inlet air (40°C) type	1760
GT9000W	Refrigeration air dryer/ Water cooling/large standard inlet air (40°C) type	1768
GT9000WV2	Refrigeration air dryer/Inverter-controlled water cooling, large standard inlet air (40°C) type	1776
GW49D	Outdoor-use pressure gauge	369
GWC*	Fitting/cap	824
GWCR*	Fitting/cross	824
GWFY*	Fitting/FY	824
GWJL*	Mini fitting/elbow	838
GWJP*	Mini fitting/plug	838
GWJS*	Mini fitting/straight	838
GWJT*	Mini fitting/tee	838
GWJY*	Mini fitting/Y tee	838
GWL*	Fitting/elbow	824
GWM*	Fitting/for tightening fitting	824
GWMF*	Fitting/manifold	824
GWP*-0	Fitting/connecting plug	824
GWP*-B	Fitting/blanking plug	824
GWP*-L	Fitting/L-plug	824
GWS*	Fitting/straight	824
GWT*	Fitting/tee	824
GWTR*	Fitting/tetrapod	824
GWWY*	Fitting/double Y	824
GWY*	Fitting/Y tee	824
GX3200D	Refrigeration air dryer/Compact type for mounting on equipment/standard inlet air (35°C)	1738
GX5200D	Refrigeration air dryer/Compact for direct compressor connection/high temperature inlet air (55°C)	1742

H

H0	Cylinder switch/1-color LED/reed	CB-029SA
H0Y	Cylinder switch/2-color LED/reed	CB-029SA
HAP-1C	Parallel hand	CB-030SA
HAP-2 to 4CS	Parallel hand	CB-030SA
HB	High corrosion resistant direct acting 2-port solenoid valve	CB-03-1SA
HBL	Fulcrum hand	CB-030SA
HCA	High speed cylinder/double acting/single rod	CB-030SA
HCM	High energy absorption cylinder/double acting/single rod	CB-030SA
HCP	Lateral parallel hand	CB-030SA
HD-0.5 to 9	Desiccant air dryer/compact heat-less dryer	1792
HDL	Wide angle hand	CB-030SA
HFP	Wide parallel hand	CB-030SA
HGP	Long stroke parallel hand	CB-030SA
HJL	Toggle hand	CB-030SA

■ Listed catalog No.

CB-029SA...Pneumatic Cylinders I CB-024SA ...Pneumatic, Vacuum and Auxiliary Components
CB-030SA...Pneumatic Cylinders II CB-03-1SA ...General Purpose Valves
CB-023SA...Pneumatic Valves

■ Codes (pneumatic valves and general purpose valves)

Ⓓ...Discrete valves Ⓡ...Reduced wiring manifolds
Ⓘ...Individual wiring manifolds Ⓧ...Mix manifolds
Ⓑ...Block manifolds Ⓜ...Manifolds

Model No. [index in alphabetical order]

Model No.	Model	Catalog No./page
H		
HK1	Motorized valve for gas combustion system	CB-03-1SA
HKP	Cross roller parallel hand	CB-030SA
HLA	Thin parallel hand	CB-030SA
HLAG	Rubber covered thin parallel hand	CB-030SA
HLB	Thin parallel hand	CB-030SA
HLBG	Rubber covered thin parallel hand	CB-030SA
HLC	Thin long stroke parallel hand	CB-030SA
HLD	Ultra thin parallel hand	CB-030SA
HMD	Thin wide angle hand	CB-030SA
HMF	Compact wide parallel hand	CB-030SA
HMFB	LM guided large wide parallel hand	CB-030SA
HMTB1	Compact metal-free lever 2-port solenoid valve for medical equipment	CB-03-1SA
HMTG1	Compact metal-free lever 3-port solenoid valve for medical equipment	CB-03-1SA
HMV	ⒹManual selector valve/miniature	CB-023SA
HNB1	Compact direct acting 2-port solenoid valve	CB-03-1SA
HNG1	Compact direct acting 3-port solenoid valve	CB-03-1SA
HPS	Close contact confirmation switch/single unit	1276
HPV	Manual pinch valve	CB-03-1SA
HRL-1	Hybrid robot/Pneumatic robot element/single axis unit	CB-030SA
HRL-2G	Hybrid robot/2-action pneumatic robot	CB-030SA
HRL-2S	Hybrid robot/2-action pneumatic robot	CB-030SA
HS	Motorized valve for gas combustion system	CB-03-1SA
HSV	ⒹManual selector valve/standard	CB-023SA
HVB112	Solenoid valve for high vacuum	CB-03-1SA
HVB212	Solenoid valve for high vacuum	CB-03-1SA
HVB312	Solenoid valve for high vacuum	CB-03-1SA
HVB412	Solenoid valve for high vacuum	CB-03-1SA
HVB512	Solenoid valve for high vacuum	CB-03-1SA
HVB612	Solenoid valve for high vacuum	CB-03-1SA
HVB712	Solenoid valve for high vacuum	CB-03-1SA
HVL12	Delay vacuum solenoid valve	CB-03-1SA
HYN	Direct acting 2, 3-port valve (pinch valve for high purity fluids)	CB-03-1SA
I		
IAGD5	Integrated gas supply system	CB-03-1SA
J		
J100 to 800-W	Joiner/for rotary modular F.R.L./Standard White Series	346
JL	Fitting (elbow fitting)	863
JSB3	Brake unit	CB-030SA
JSC3(-N) JSC4(-N)	Brake cylinder (medium and large bore size)/double acting/single rod	CB-030SA
JSC3-H JSC4-H	Brake cylinder (medium and large bore size)/double acting/low hydraulic	CB-030SA
JSC3-P12	Brake cylinder (oil-prohibition)	CB-029SA
JSC3-T JSC4-T	Brake cylinder (medium and large bore size)/double acting/heat resistance	CB-030SA
JSC3-V	Brake cylinder (medium bore size)/With valve for brake/double acting	CB-030SA
JSG	Tie rod cylinder with brake/double acting/single rod	CB-030SA
JSG-V	Tie rod cylinder with brake/double acting/with valve for brake release	CB-030SA
JSK2	Brake cylinder (small bore size ø20 to 40/caulking)/double acting	CB-030SA
JSK2-V	Brake cylinder (small bore size ø20 to 40/caulking)/With valve/double acting	CB-030SA
JSM2	Brake cylinder (small bore size ø20 to 40/disassembling)/double acting	CB-030SA
JSM2-V	Brake cylinder (small bore size ø20 to 40/disassembling)/With valve/double acting	CB-030SA
K		
K-005	Filter/for air sensor	1332
K0V/H	Cylinder switch/1-color LED/2-wire reed	CB-029SA
K2, 3V/H	Cylinder switch/1-color LED, 2, 3-wire proximity	CB-029SA
K2, 3Y V/H	Cylinder switch/2-color LED, 2, 3-wire proximity	CB-029SA
K3P V/H	Cylinder switch/PNP output/3-wire proximity sensor	CB-029SA
K5V/H	Cylinder switch/Without display/reed 2-wire	CB-029SA
K60570	F.R.L. kit	410
KML50	Fine level switch	CB-03-1SA
KML60	Fine level switch	CB-03-1SA
KML703	Fine level switch	CB-03-1SA

KX	Coiling tube	908
KZV3	Pilot operated 2-port solenoid valve	CB-03-1SA

L

L1000 to 8000-P6	Lubricator/copper and PTFE free series	319
L1000 to 8000-W	Lubricator/Standard White Series	152
LAD*	Diaphragm cylinder valve	CB-03-1SA
LBC	Air bearing actuator	CB-030SA
LCG	Linear slide cylinder/ Double acting/single rod	CB-030SA
LCG-P7*	Linear slide cylinder/ Double acting/clean-room specifications	CB-030SA
LCG-Q	Linear slide cylinder/ Double acting/position locking	CB-030SA
LCM	Linear slide cylinder/ Double acting/single rod	CB-030SA
LCM-A	Linear slide cylinder/ Double acting/side mounting	CB-030SA
LCM-P	Linear slide cylinder/ Double acting stroke adjustable push type	CB-030SA
LCM-P73	Linear slide cylinder/ Double acting/clean-room specifications	CB-030SA
LCM-R	Linear slide cylinder/ Double acting/stroke adjustable/push-pull type	CB-030SA
LCR	Linear slide cylinder/ Double acting/single rod	CB-030SA
LCR-F	Linear slide cylinder/ Double acting/fine speed	CB-030SA
LCR-F-P7*	Linear slide cylinder/Double acting/ fine speed/clean-room specifications	CB-030SA
LCR-P7*	Linear slide cylinder/Double acting/ single rod/clean-room specifications	CB-030SA
LCR-Q	Linear slide cylinder/ Double acting/position locking	CB-030SA
LCW	Linear slide cylinder/ Double acting/single rod	CB-030SA
LCW-Q	Linear slide cylinder/ Double acting/position locking	CB-030SA
LCX	Linear slide cylinder/ Double acting/single rod	CB-030SA
LCX-*L	Linear slide cylinder/Double acting/ single rod/long stroke length	CB-030SA
LCX-*L-P7*	Linear slide cylinder/Double acting/single rod/ clean-room specifications/long stroke length	CB-030SA
LCX-P7*	Linear slide cylinder/Double acting/ single rod/clean-room specifications	CB-030SA
LCX-Q	Linear slide cylinder/ Double acting/position locking	CB-030SA
LCX-Q-*L	Linear slide cylinder/Double acting/ position locking/long stroke length	CB-030SA
LFC-KL	Lifter cylinder	CB-029SA
LGD**	Air operated valve for process gas	CB-03-1SA
LGD*0	Manual valve for process gas	CB-03-1SA
LHA	Linear guide hand	CB-030SA
LHAG	Linear guide hand with rubber cover	CB-030SA
LMB	Linear guide lock	CB-030SA
LMF0	Ⓡ5-port valve	CB-023SA
LML	Linear guide lock	CB-030SA
LN	Cylinder with length measuring sensor/sensor/amplifier/display	CB-030SA
LSH	Linear Slide Hand	CB-030SA
LW4000/LW8000	Lubricator Outdoor Series	342

M

M0V/H	Cylinder switch/ 1-color LED/2-wire reed	CB-029SA
M1000 to 8000-P6	Oil mist filter/ Copper and PTFE free Series	316
M1000 to 8000-W	Oil mist filter/ Standard White Series	116
M2, 3V/H	Cylinder switch/ 1-color LED, 2, 3-wire proximity	CB-029SA
M2, 3WV	Cylinder switch/ 2-color LED, 2, 3-wire proximity	CB-029SA
M3GA1/2/3	Ⓘ Pilot operated 3-port valve/ body piping	CB-023SA
M3GA1/2/3	Ⓜ Pilot operated 3-port valve (master valve)/body piping	CB-023SA

■ Listed catalog No.

CB-029SA...Pneumatic Cylinders I CB-024SA ...Pneumatic, Vacuum and Auxiliary Components
CB-030SA...Pneumatic Cylinders II CB-03-1SA ...General Purpose Valves
CB-023SA...Pneumatic Valves

■ Codes (pneumatic valves and general purpose valves)

Ⓓ...Discrete valves Ⓡ...Reduced wiring manifolds
Ⓘ...Individual wiring manifolds Ⓧ...Mix manifolds
Ⓑ...Block manifolds Ⓜ...Manifolds

Model No. [index in alphabetical order]

Model No.	Model	Catalog No./page
M		
M3GA1/2/3-T*(D)	Ⓡ Pilot operated 3-port valve Body piping	CB-023SA
M3GB1/2	Ⓘ Pilot operated two 3-port valves integrated/base piping	CB-023SA
M3GB1/2-T*(D)	Ⓡ Pilot operated two 3-port valves integrated/base piping	CB-023SA
M3GD1/2/3	Ⓘ Pilot operated 3-port valve/ body piping	CB-023SA
M3GD1/2/3-T*(D)	Ⓡ Pilot operated 3-port valve Body piping	CB-023SA
M3GE1/2	Ⓘ Pilot operated two 3-port valves integrated/base piping	CB-023SA
M3GE1/2-T*(D)	Ⓡ Pilot operated two 3-port valves integrated/base piping	CB-023SA
M3KA1	Ⓘ Pilot operated 3-port valve Body piping	CB-023SA
M3KA1	Ⓜ Pilot operated 3-port valve (master valve)/body piping	CB-023SA
M3MA0	Ⓘ Direct acting 3-port valve/ Body piping	CB-023SA
M3MB0	Ⓘ Direct acting 3-port valve/ Sub-plate piping	CB-023SA
M3P V/H	Cylinder switch/1-color LED/ PNP output/3-wire proximity sensor	CB-029SA
M3PA1/2	Ⓘ Direct acting 3-port valve/ Body piping	CB-023SA
M3PB1/2	Ⓘ Direct acting 3-port valve/ Sub-plate piping	CB-023SA
M3QRA	Ⓘ Direct acting 3-port valve/ Body piping	CB-023SA
M3QRB	Ⓘ Direct acting 3-port valve/ Sub-plate piping	CB-023SA
M4F0/1/2/3	Ⓘ Pilot operated 5-port valve/ Body piping	CB-023SA
M4F0/1/2/3	Ⓜ Pilot operated 5-port valve (master valve)/body piping	CB-023SA
M4F30EX**	Ⓘ Explosion-proof pilot operated 5-port valve/body piping	CB-023SA
M4F3*0E	Ⓘ Explosion-proof pilot operated 5-port valve/body piping	CB-023SA
M4F4/5/6/7	Ⓘ Pilot operated 5-port valve/ sub-plate piping	CB-023SA
M4F4/5/6/7	Ⓜ Pilot operated 5-port valve (master valve)/sub-plate piping	CB-023SA
M4F4/5/6/7*0EX	Ⓘ Explosion-proof pilot operated 5-port valve/sub-plate piping	CB-023SA
M4F4/5/6/7*0E	Ⓘ Explosion-proof pilot operated 5-port valve/sub-plate piping	CB-023SA
M4GA1/2/3	Ⓘ Pilot operated 5-port valve/ body piping	CB-023SA
M4GA1/2/3	Ⓜ Pilot operated 5-port valve (master valve)/body piping	CB-023SA
M4GA1/2/3-T*(D)	Ⓡ Pilot operated 5-port valve/ body piping	CB-023SA
M4GA4	Ⓘ Pilot operated 5-port valve/ body piping	CB-023SA
M4GA4-T*	Ⓡ Pilot operated 5-port valve/ body piping	CB-023SA
M4GA4-T6(D)	Ⓡ Pilot operated 5-port valve (serial transmission)/body piping	CB-023SA
M4GB1/2/3	Ⓘ Pilot operated 5-port valve/ base piping	CB-023SA
M4GB1/2/3	Ⓜ Pilot operated 5-port valve (master valve)/base piping	CB-023SA
M4GB1/2/3-T* (D)	Ⓡ Pilot operated 5-port valve base piping	CB-023SA
M4GB4	Ⓘ Pilot operated 5-port valve/ base piping	CB-023SA
M4GB4-T*	Ⓡ Pilot operated 5-port valve base piping	CB-023SA
M4GB4-T6(D)	Ⓡ Pilot operated 5-port valve (serial transmission)/base piping	CB-023SA
M4GD1/2/3	Ⓜ Pilot operated 5-port valve (master valve)/body piping	CB-023SA
M4GD1/2/3-T*(D)	Ⓡ Pilot operated 5-port valve/ body piping	CB-023SA
M4GE1/2/3	Ⓘ Pilot operated 5-port valve/ base piping	CB-023SA
M4GE1/2/3-T*(D)	Ⓡ Pilot operated 5-port valve base piping	CB-023SA
M4KA1/2/3/4	Ⓘ Pilot operated 5-port valve/ body piping	CB-023SA
M4KA1/2/3/4	Ⓜ Pilot operated 5-port valve (master valve)/body piping	CB-023SA
M4KB1/2/3/4	Ⓘ Pilot operated 4, 5-port valve/sub-plate piping	CB-023SA
M4KB1/2/3/4	Ⓜ Pilot operated 4, 5-port valve (master valve)/sub-plate piping	CB-023SA

M4SA0	ⒾPilot operated 5-port valve/ body piping	CB-023SA
M4SB0	ⒾPilot operated 5-port valve/ sub-plate piping	CB-023SA
M4SB0	ⓇPilot operated 5-port valve/ sub-plate piping	CB-023SA
M4TB3/4	ⓇPilot operated 5-port valve/ (reduced wiring valve)	CB-023SA
M512*	ⒹPilot operated 2-port valve/ direct mounting	CB-023SA
M513*	ⒹPilot operated 3-port valve/ direct mounting	CB-023SA
M5V/H	Cylinder switch/ Without display/reed 2-wire	CB-029SA
MAB1	Metal-free 2-port solenoid valve	CB-03-1SA
MAG1	Metal-free 3-port solenoid valve	CB-03-1SA
MAVL	Large mechanical valve/detector	1638
MCP	Mechanical power cylinder	CB-030SA
MD	Multi-monitors	1354
MDC2	Compact direct mounting cylinder/double acting/single rod	CB-029SA
MDC2-F	Compact direct mounting cylinder/double acting/fine speed	CB-029SA
MDC2-X	Compact direct mounting cylinder/single acting/push	CB-029SA
MDC2-Y	Compact direct mounting cylinder/single acting/pull	CB-029SA
MDV	Compact direct mounting cylinder	CB-029SA
MEB2	Metal-free 2-port solenoid valve	CB-03-1SA
MEG2	Metal-free 3-port solenoid valve	CB-03-1SA
MEVT	Thin electro pneumatic regulator/ Reduced wiring manifold	638
MFC	Robot cylinder/double acting/single rod	CB-030SA
MFC-B	Robot cylinder/double acting/with brake	CB-030SA
MFC-BK	Robot cylinder/ Double acting/with brake/high load	CB-030SA
MFC-BS	Robot cylinder/ Double acting/with brake sensor	CB-030SA
MFC-BSK	Robot cylinder/ Double acting/with brake sensor/high load	CB-030SA
MFC-K	Robot cylinder/double acting/high load	CB-030SA
MGD10/20R	Manual valve for process gas	CB-03-1SA
MGPS2	Contact confirmation switch/manifold	1266
MGPS3	Digital gap switch/manifold	1242
MHB4	Miniature motorized 2-port ball valve (motor valve)	CB-03-1SA
MHG4	Miniature motorized 3-port ball valve (motor valve)	CB-03-1SA
MHPS	Close contact confirmation switch manifold	1280
MJB3	Metal-free direct acting 2-port solenoid valve	CB-03-1SA
MJL*	Tightening fitting/elbow	863
MJN*	Tightening fitting/sleeve	863
MJS*	Tightening fitting/straight	863
MJT*	Tightening fitting/tee	863
MJU*	Tightening fitting/insert ring	863
MKB3	Metal-free 2-port solenoid valve	CB-03-1SA
MM	Medium mechanical valve/detector	1626
MM3000 to 8000	Oil mist filter/medium pressure series	302
MMD*03RN	Manual valve for chemical liquids	CB-03-1SA
MN3E0	ⓇPilot operated 3, 4-port valve	CB-023SA
MN3E00	ⓇPilot operated 3, 4-port valve	CB-023SA
MN3EX0	Ⓡ/ⓍPilot operated 3-port valve	CB-023SA
MN3GA1/2	Ⓘ/ⒷPilot operated 3-port valve/body piping	CB-023SA
MN3GA1/2-T*	Ⓘ/ⒷPilot operated 3-port valve/body piping	CB-023SA
MN3GAX12	Ⓡ/ⓍPilot operated 3-port valve/body piping	CB-023SA
MN3GB1/2	Ⓘ/ⒷPilot operated two 3-port valves integrated/base piping	CB-023SA
MN3GB1/2-T*	Ⓡ/ⒷPilot operated two 3-port valves integrated/base piping	CB-023SA
MN3GD1/2	Ⓘ/ⒷPilot operated 3-port valve/body piping	CB-023SA
MN3GD1/2-T*	Ⓘ/ⒷPilot operated 3-port valve/body piping	CB-023SA
MN3GDX12	Ⓡ/ⓍPilot operated 3-port valve/body piping	CB-023SA
MN3GE1/2	Ⓘ/ⒷPilot operated two 3-port valves integrated/base piping	CB-023SA

■ Listed catalog No.

CB-029SA...Pneumatic Cylinders I CB-024SA ...Pneumatic, Vacuum and Auxiliary Components
CB-030SA...Pneumatic Cylinders II CB-03-1SA ...General Purpose Valves
CB-023SA...Pneumatic Valves

■ Codes (pneumatic valves and general purpose valves)

Ⓓ...Discrete valves Ⓡ...Reduced wiring manifolds
Ⓘ...Individual wiring manifolds Ⓧ...Mix manifolds
Ⓑ...Block manifolds Ⓜ...Manifolds

Model No. [index in alphabetical order]

Model No.	Model	Catalog No./page
M		
MN3GE1/2-T*	Ⓡ/Ⓑ Pilot operated two 3-port valves integrated/base piping	CB-023SA
MN3S0	Ⓡ Pilot operated 3-port valve/(reduced wiring valve)	CB-023SA
MN3S0	Ⓡ Pilot operated 3-port valve/(reduced wiring valve)/two 3-port valves integrated	CB-023SA
MN4E0	Ⓡ Pilot operated 3, 4-port valve	CB-023SA
MN4E00	Ⓡ Pilot operated 3, 4-port valve	CB-023SA
MN4EX0	Ⓡ/Ⓧ Pilot operated 4-port valve	CB-023SA
MN4GA1/2	Ⓘ/Ⓑ Pilot operated 5-port valve/body piping	CB-023SA
MN4GA1/2-T*	Ⓡ/Ⓑ Pilot operated 5-port valve/body piping	CB-023SA
MN4GAX12	Ⓡ/Ⓧ Pilot operated 5-port valve/body piping	CB-023SA
MN4GB1/2	Ⓘ/Ⓑ Pilot operated 5-port valve/base piping	CB-023SA
MN4GB1/2-T*	Ⓡ/Ⓑ Pilot operated 5-port valve/base piping	CB-023SA
MN4GBX12	Ⓡ/Ⓧ Pilot operated 5-port valve/base piping	CB-023SA
MN4GD1/2	Ⓘ/Ⓑ Pilot operated 5-port valve/body piping	CB-023SA
MN4GD1/2-T*	Ⓡ/Ⓑ Pilot operated 5-port valve/body piping	CB-023SA
MN4GDX12	Ⓡ/Ⓧ Pilot operated 5-port valve/body piping	CB-023SA
MN4GE1/2	Ⓘ/Ⓑ Pilot operated 5-port valve/base piping	CB-023SA
MN4GE1/2-T*	Ⓡ/Ⓑ Pilot operated 5-port valve/base piping	CB-023SA
MN4GEX12	Ⓡ/Ⓧ Pilot operated 5-port valve/base piping	CB-023SA
MN4KB1/2	Ⓑ Pilot operated 5-port valve/sub-plate piping	CB-023SA
MN4S0	Ⓡ Pilot operated 4-port valve/(reduced wiring valve)	CB-023SA
MN4TB1/2	Ⓡ/Ⓑ Pilot operated 4-port valve (reduced wiring valve)	CB-023SA
MNRB500	Block manifold regulator	392
MNRJB500	Block manifold Compact direct acting precision regulator	492
MR10R	Compact metal-free 2, 3-port solenoid valve	CB-03-1SA
MR16	Compact metal-free 2, 3-port solenoid valve	CB-03-1SA
MRG2	Magnet rodless cylinder/double acting	CB-029SA
MRL2	Magnet rodless cylinder/combination guided	CB-029SA
MRL2-F	Magnet rodless cylinder/combination guided/fine speed	CB-029SA
MRL2-G	Magnet rodless cylinder/simplified guide 1-piston	CB-029SA
MRL2-GF	Magnet rodless cylinder/simplified guide 1-piston/fine speed	CB-029SA
MRL2-W	Magnet rodless cylinder/simplified guide 2-piston	CB-029SA
MRL2-WF	Magnet rodless cylinder/simplified guide 2-piston/fine speed	CB-029SA
MS	Compact mechanical valve/detector	1612
MSB1	Motor driven 2-port ball valve for steam (motor valve)	CB-03-1SA
MSB1D	Motor driven 2-port ball valve with relay for steam (motor valve)	CB-03-1SA
MSB1DF	Motor driven 2-port ball valve with relay for steam (motor valve)/full bore	CB-03-1SA
MSB1F	Motor driven 2-port ball valve for steam (motor valve)/full bore	CB-03-1SA
MSD	Small compact cylinder/Double acting/single rod	CB-029SA
MSD-F	Small compact cylinder/Double acting/single rod/fine speed	CB-029SA
MSDG-L	Small compact cylinder/Double acting/guided/with switch	CB-029SA
MSDG-LF	Small compact cylinder/Double acting/guided/with switch/fine speed	CB-029SA
MSD-K	Small compact cylinder/Double acting/high load	CB-029SA
MSD-KF	Small compact cylinder/Double acting/high load/fine speed	CB-029SA
MSD-X	Small compact cylinder/Single acting/push	CB-029SA
MSD-Y	Small compact cylinder/Single acting/pull	CB-029SA
MT3S0	Ⓡ Pilot operated 3-port valve/(reduced wiring valve)	CB-023SA

MT3S0	Ⓡ Pilot operated 3-port valve (Reduced wiring valve) Two 3-port valves integrated	CB-023SA
MT4S0	Ⓡ Pilot operated 4-port valve/ (reduced wiring valve)	CB-023SA
MTLPS	Cutting tool breakage detection switch/ Manifold	1294
MV3QRA	3QR negative pressure switching unit Body piping	CB-023SA
MV3QRB	3QR negative pressure switching unit Sub-plate piping	CB-023SA
MVB*0	Manual valve for high vacuum	CB-03-1SA
MVB*17	Manual valve for high vacuum	CB-03-1SA
MVC	Compact cylinder with suction pad/ Double acting/single rod	CB-029SA
MVP*0	Manual valve for high vacuum	CB-03-1SA
MW3GA2	Ⓡ Pilot operated 3-port valve/ body piping	CB-023SA
MW4GA2	Ⓡ Pilot operated 5-port valve/ body piping	CB-023SA
MW4GA2-R1	Ⓘ Pilot operated 5-port valve/ body piping	CB-023SA
MW4GB2	Ⓡ Pilot operated 5-port valve/ base side piping	CB-023SA
MW4GB2-R1	Ⓘ Pilot operated 5-port valve/ base side piping	CB-023SA
MW4GB4-R1	Ⓘ Pilot operated 5-port valve/ base side piping	CB-023SA
MW4GB4-T1/6	Ⓡ Pilot operated 5-port valve/ base side piping	CB-023SA
MW4GZ2	Ⓡ Pilot operated 5-port valve/ base bottom piping	CB-023SA
MW4GZ2-R1	Ⓘ Pilot operated 5-port valve/ base bottom piping	CB-023SA
MW4GZ4-R1	Ⓘ Pilot operated 5-port valve/ base bottom piping	CB-023SA
MW4GZ4-T1/6	Ⓡ Pilot operated 5-port valve/ base bottom piping	CB-023SA
MW4000, 8000	Oil mist filter Outdoor Series	334
MWD	Weir diaphragm valve	CB-03-1SA
MX1000 to 8000-W	High performance oil mist filter Standard White Series	128
MXB1	Motor driven 2-port ball valve (motor valve)	CB-03-1SA
MXB1D	Motor driven 2-port ball valve with relay (motor valve)	CB-03-1SA
MXB1DF	Motor driven 2-port ball valve with relay (motor valve)/full bore	CB-03-1SA
MXB1D-N	Motor driven oil-prohibited 2-port ball valve (motor valve)	CB-03-1SA
MXB1F	Motor driven 2-port ball valve (motor valve)/full bore	CB-03-1SA
MXB1-N	Motor driven oil-prohibited 2-port ball valve (motor valve)	CB-03-1SA
MXBC2	Motor driven proportional control 2-port ball valve (motor valve)	CB-03-1SA
MXG1	Motor driven 3-port ball valve (motor valve)	CB-03-1SA
MXG1D	Motor driven 3-port ball valve with relay (motor valve)	CB-03-1SA
MXG1D-N	Motor driven oil-prohibited 3-port ball valve (motor valve)	CB-03-1SA
MXG1-N	Motor driven oil-prohibited 3-port ball valve (motor valve)	CB-03-1SA
MXGC2	Motor driven proportional control 3-port ball valve (motor valve)	CB-03-1SA
MYB1	Metal-free 2-port solenoid valve	CB-03-1SA
MYB2	Metal-free 2-port solenoid valve	CB-03-1SA
MYB3	Metal-free 2-port solenoid valve	CB-03-1SA
MYG1	Metal-free 3-port solenoid valve	CB-03-1SA
MYG2	Metal-free 3-port solenoid valve	CB-03-1SA
MYG3	Metal-free 3-port solenoid valve	CB-03-1SA

N

N*P51*	Ⓑ Pilot operated 2, 3, 5-port valve/block manifold	CB-023SA
NAB*	Air operated 2-port valve, single unit (Compact cylinder valve)	CB-03-1SA
NAB*V	Air operated 2-port valve with solenoid valve for low vacuum, single unit (Compact cylinder valve)	CB-03-1SA

■ Listed catalog No.

CB-029SA...Pneumatic Cylinders I CB-024SA ...Pneumatic, Vacuum and Auxiliary Components
CB-030SA...Pneumatic Cylinders II CB-03-1SA ...General Purpose Valves
CB-023SA...Pneumatic Valves

■ Codes (pneumatic valves and general purpose valves)

Ⓓ...Discrete valves Ⓡ...Reduced wiring manifolds
Ⓘ...Individual wiring manifolds Ⓧ...Mix manifolds
Ⓑ...Block manifolds Ⓜ...Manifolds

Model No. [index in alphabetical order]

Model No.	Model	Catalog No./page
N		
NAB-4SX1450	Air operated 2-port valve, cylinder valve for high pressure air	CB-03-1SA
NAB-4SX1451	Air operated 2-port valve, cylinder valve for high pressure air	CB-03-1SA
NAB-6X2191/2192	Medium pressure cylinder valve	CB-03-1SA
NAB-X2267/2268	Color changing valve	CB-03-1SA
NAD*	Diaphragm cylinder valve	CB-03-1SA
NAD*V	Diaphragm cylinder valve for low vacuum	CB-03-1SA
NAP11	Air operated 3-port valve	CB-03-1SA
NCK	Shock absorber/fixed	CB-030SA
NHS-H	New handling system/Z-axis module HRL	CB-030SA
NHS-S	New handling system/Z-axis module STL-B	CB-030SA
NP13/14	Internal pilot 3-port valve with solenoid valve	CB-03-1SA
NPV2	Direct pressure automatic pinch valve	CB-03-1SA
NS	Nitrogen gas extraction unit/ Unit	1682
NSU	Nitrogen gas extraction unit/ System	1688
NSR	New handling system/X-axis module	CB-030SA
NU	New urethane tube	907
NVP11	Air operated 3-port valve/with solenoid valve	CB-03-1SA
O		
OGD10/20R	Manual valve for process gas	CB-03-1SA
OMC2	Sequential fluid control components for pulse-jet valve (large port size dust collector valve)	CB-03-1SA
P		
P1100-W	Reed switch Compact mechanical pressure switch	168
P4000-W	Mechanical pressure switch/ Standard White Series	166
P4100-W	Reed switch Compact mechanical pressure switch	168
P512*	ⒹPilot operated 2-port valve/pilot	CB-023SA
P513*	ⒹPilot operated 3-port valve/pilot	CB-023SA
P5142	ⒹPilot operated 5-port valve/pilot	CB-023SA
P8100-W	Reed switch Compact mechanical pressure switch	168
PCC	Pin clamp cylinder Double acting/single rod	CB-030SA
PCC-Q	Pin clamp cylinder Double acting/position locking	CB-030SA
PCD	ⒹPilot operated poppet 3, 4, 5-port valve	CB-023SA
PD2	Pilot operated 2-port air operated valve for dust collector	CB-03-1SA
PD3-20 to 40A	Pilot operated 2-port air operated valve for dust collector	CB-03-1SA
PD3-65 to 80A/M	Pilot operated 2-port air operated valve for large bore size dust collector	CB-03-1SA
PDV2	Pilot operated 2-port valve with solenoid valve for dust collector	CB-03-1SA
PDV3-20 to 40A	Pilot operated 2-port valve with solenoid valve for dust collector	CB-03-1SA
PDV3-65 to 80A/M	Pilot operated 2-port valve with solenoid valve for large bore size dust collector	CB-03-1SA
PDVE4	Explosion-proof 2-port solenoid valve (explosion-proof pulse-jet valve) for dust collector	CB-03-1SA
PE	Pressure switch/logic valve	1645
PFD	Pneumatic flow rate sensor/separated display	1534
PFK	Pneumatic flow rate sensor/tester kit	1540
PG	Push-in fitting for fiber tube (Standard)	886
PGM	Regulator for process gas	CB-03-1SA
PG-P2-B	Blanking plug	886
PJVB	Control box manifold solenoid valve (2-port solenoid valve for pulse jet control)	CB-03-1SA
PKA	Pilot kick 2-port solenoid valve for air	CB-03-1SA
PKS	Pilot kick 2-port solenoid valve for steam	CB-03-1SA
PKW	Pilot kick 2-port solenoid valve for water	CB-03-1SA
PL	PL switch	1324
PLE-B12	Side block/integrated	1656
PLJ-C12	YES element/relay	1653
PLK-A11	OR element/line type	1657
PLK-B12	OR element/integrated	1656
PLK-C12	OR element/relay	1653
PLL-A11	AND element/line type	1657
PLL-B12	AND element/integrated	1656
PLL-C12	AND element/relay	1653
PLM	Memory element/relay	1654
PLN-B12	NOT element/integrated	1656

PLN-C12	NOT element/relay	1653
PLN-D12	Threshold element/relay	1653
PMP	Fine regulator	CB-03-1SA
PNA	Oxygen concentration monitor	1702
PPD3	Electronic pressure switch/ Sensor/ amplifier integrated with display	1178
PPD3-S	Electronic pressure switch/stainless steel diaphragm sensor/sensor/amplifier integrated with display	1176
PPE	Compact electronic pressure switch/ Sensor/amplifier integrated without display	1202
PPE-*A	Compact electronic pressure switch/ Sensor-amplifier integrated/without display/analog output	1205
PPG-D	Electronic pressure sensor with digital display	1192
PPR	Electronic pressure sensor with digital display	1214
PPX	Digital pressure sensor	1148
PRD	Amplifier/element and sensor	1659
PRE-A12	Pressure switch/relay	1653
PRF-A2	Booster/element and sensor	1659
PRS-A12	Solenoid valve/relay	1653
PRT	Timer/relay	1653
PSD	PLC branch block	1652
PSE	PLC I/O block	1652
PSL	PLC AND element	1652
PSM	PLC element	1652
PSV	PLC sub-base V type	1652
PSW	Electronic pressure switch/ Sensor/amplifier integrated without display	1212
PTN2	Fitting for fiber tube	877
PV5-6R	Ⓓ Pilot operated 5-port valve ISO valve/ I/O connector/ISO size (1)	CB-023SA
PV5-8R	Ⓓ Pilot operated 5-port valve ISO valve/ I/O connector/ISO size (2)	CB-023SA
PV5G-6	Ⓓ Pilot operated 5-port valve ISO valve/ DIN terminal box/ISO size (1)	CB-023SA
PV5G-8	Ⓓ Pilot operated 5-port valve ISO valve/ DIN terminal box/ISO size (2)	CB-023SA
PV5S	ISO compliant master valve	CB-023SA
PVP	Precise suction plate	1107
PVS	Pilot operated 2-port solenoid valve	CB-03-1SA
PWS	Threshold sensor	806
PXB-B3	Pushbutton switch and switch body/separated	1660
PXC-K	Limit switch	1666
PXC-M	Miniature limit switch	1662
PXC-M	Compact limit switch	1663
PXD	Proximity sensor/element and sensor	1659
PXF	Limit sensor/element and sensor	1659
PXV	Air lamp	1658
PYM	Fine regulator	CB-03-1SA
PZM	Mounting bracket/line type	1657
PZU	Sub-base and input block/ relay sub-base	1654

Q

QEL	Quick exhaust valve	786
QEV2	Quick exhaust valve	790

R

R0, 3, 4, 6	Cylinder switch/ 1-color LED/2-wire reed	CB-029SA
R1, 2	Cylinder switch/ 1-color LED, proximity 2-wire	CB-029SA
R1000 to 8000-P6	Regulator/copper and PTFE free series	317
R1000 to 8000-W	Regulator/Standard White Series	136
R1100 to 8100-P6	Reverse regulator/copper and PTFE free series	318
R1100 to R8100-W	Reverse regulator/Standard White Series	144
R2, 3Y	Cylinder switch/ 2-color LED, 2, 3-wire proximity	CB-029SA
R3000 to 8000-G4	Regulator/flame-resistant series	274
R3100 to 8100-G4	Reverse regulator/flame-resistant series	280
R5	Cylinder switch/ Without display/reed 2-wire	CB-029SA
RA800	Compact regulator/compact piston	382
RB500	Compact regulator	386

■ Listed catalog No.

CB-029SA...Pneumatic Cylinders I CB-024SA ...Pneumatic, Vacuum and Auxiliary Components
CB-030SA...Pneumatic Cylinders II CB-03-1SA ...General Purpose Valves
CB-023SA...Pneumatic Valves

■ Codes (pneumatic valves and general purpose valves)

Ⓓ...Discrete valves Ⓡ...Reduced wiring manifolds
Ⓘ...Individual wiring manifolds Ⓧ...Mix manifolds
Ⓑ...Block manifolds Ⓜ...Manifolds

Model No. [index in alphabetical order]

Model No.	Model	Catalog No./page
R		
RC2000	Clean regulator	566
RCC2	Rotary clamp cylinder Double acting/single rod	CB-030SA
RCC2-G4	Rotary clamp cylinder Anti-spatter adherence	CB-030SA
RCS	Rotary clamp cylinder (Single guide) double acting/single rod	CB-030SA
RG	Fiber tube push-in fitting (flame resistance)	899
RJB500	Compact direct acting precision regulator	490
RJF	Rotary fitting	870
RM3000, 4000	Regulator/medium pressure series	308
RN3000 to 8000	Oil-prohibited regulator	288
RP1000	Precision regulator	518
RPE1000	Precision regulator	512
RP2000	Precision regulator	522
RRC	Rotary actuator/ Rack and pinion	CB-030SA
RS-6	Rain sensor for automatic watering control	CB-03-1SA
RSC-G	Watering controller	CB-03-1SA
RSC-1WP	Battery operated watering controller	CB-03-1SA
RSC-1WP-C	Automatic watering controller	CB-03-1SA
RSC-1WP-H	Automatic watering controller	CB-03-1SA
RSC-2WP	Battery operated watering controller	CB-03-1SA
RSC-S5	Solar controller	CB-03-1SA
RSV-K	Solenoid valve for automatic watering control	CB-03-1SA
RSV-W	Solenoid valve for automatic watering control	CB-03-1SA
RTD-3A	Air timer/logic valve	1644
RW4000, 8000	Regulator Outdoor Series	338
RV3DA	Compact rotary actuator/ Angle variable/double vane mechanism	CB-030SA
RV3DV/W	Compact rotary actuator/ With valve/double vane mechanism	CB-030SA
RV3DV/W	Large rotary actuator/ With valve/double vane mechanism	CB-030SA
RV3S/D	Compact rotary actuator/vane	CB-030SA
RV3S/D	Large rotary actuator/vane	CB-030SA
RV3S/DH	Large rotary actuator/ Low hydraulic/vane mechanism	CB-030SA
RV3SA	Compact rotary actuator/ Angle variable/single vane mechanism	CB-030SA
RV3SV/W	Compact rotary actuator/ With valve/single vane mechanism	CB-030SA
RV3SV/W	Large rotary actuator/ With valve/single vane mechanism	CB-030SA
RVC	Shock absorber	CB-030SA
S		
SAB*A	Air operated 2-port valve for air/gas (cylinder valve)	CB-03-1SA
SAB*S	Air operated 2-port valve for steam/water/air (cylinder valve)	CB-03-1SA
SAB*V	Air operated 2-port valve for low vacuum (cylinder valve)	CB-03-1SA
SAB*W	Air operated 2-port valve for water/liquid (cylinder valve)	CB-03-1SA
SAL	Compact air lamp/logic valve	1646
SC1	Speed controller/medium bore size	748
SC1-W	Speed controller/Outdoor Series	752
SC-20A to 50A	Speed controller/large bore size	750
SC3P	Speed controller/ Stainless steel anti-corrosion	736
SC3R	Speed controller/ Direct piping/elbow	740
SC3U	Speed controller/ Universal/push-in fitting	720
SC3W	Speed controller/ Elbow/push-in fitting	716
SCA2	Medium bore size cylinder (medium bore size ø40 to 100)/double acting/single rod	CB-029SA
SCA2-B	Medium bore size cylinder (medium bore size ø40 to 100)/double acting/back to back	CB-029SA
SCA2-D	Medium bore size cylinder (medium bore size ø40 to 100)/double acting/double rod	CB-029SA
SCA2-G	Medium bore size cylinder (medium bore size ø40 to 100)/double acting/rubber scraper	CB-029SA
SCA2-G1	Medium bore size cylinder (medium bore size ø40 to 100)/double acting/with scraper	CB-029SA
SCA2-G2/3	Medium bore size cylinder (medium bore size ø40 to 100)/double acting/coolant proof	CB-029SA
SCA2-G4	Medium bore size cylinder (medium bore size ø40 to 100)/double acting/anti-spatter adherence	CB-029SA

SCA2-H	Medium bore size cylinder (medium bore size ø40 to 100)/double acting/low hydraulic	CB-029SA
SCA2-K	Medium bore size cylinder (medium bore size ø40 to 100)/double acting/steel tube	CB-029SA
SCA2-O	Medium bore size cylinder (medium bore size ø40 to 100)/double acting/low speed	CB-029SA
SCA2-P	Medium bore size cylinder (medium bore size ø40 to 100)/double acting/stroke adjustable/push	CB-029SA
SCA2-P12	Medium bore size cylinder (oil-prohibited)	CB-029SA
SCA2-Q2	Medium bore size cylinder (medium bore size ø40 to 100)/double acting/position locking	CB-029SA
SCA2-R	Medium bore size cylinder (medium bore size ø40 to 100)/double acting/adjustable stroke/pull	CB-029SA
SCA2-T	Medium bore size cylinder (medium bore size ø40 to 100)/double acting/heat resistance	CB-029SA
SCA2-U	Medium bore size cylinder (medium bore size ø40 to 100)/double acting/low friction	CB-029SA
SCA2-V	Medium bore size cylinder (medium bore size ø40 to 100)/with valve/double acting	CB-029SA
SCA2-W	Medium bore size cylinder (medium bore size ø40 to 100)/double acting/two-stage	CB-029SA
SCD	Speed controller/ Miniature in/out	744
SCD2	Speed controller/ In/out line type/with push-in fitting	726
SCG	Tie rod cylinder/ Double acting/single rod	CB-029SA
SCG-D	Tie rod cylinder/ Double acting/double rod	CB-029SA
SCG-G	Tie rod cylinder/ Double acting/rubber scraper	CB-029SA
SCG-G2/3	Tie rod cylinder/ Double acting/coolant proof	CB-029SA
SCG-G4	Tie rod cylinder/ Double acting/anti-spatter adherence	CB-029SA
SCG-M	Tie rod cylinder/ Double acting/rotation-stop	CB-029SA
SCG-O	Tie rod cylinder/ Double acting/low speed	CB-029SA
SCG-Q	Tie rod cylinder/ Double acting/position locking	CB-029SA
SCG-U	Tie rod cylinder/ Double acting/low friction	CB-029SA
SCK	Shock absorber/adjustable	CB-030SA
SCL2	Speed controller/ Line type/with push-in fitting	726
SCL2-N	Needle valve/ Line type/with push-in fitting	730
SCM	Round shaped cylinder/ double acting/single rod	CB-029SA
SC-M3/M5(-F)	Speed controller/miniature	742
SCM-B	Round shaped cylinder/ double acting/back to back	CB-029SA
SCM-D	Round shaped cylinder/ double acting/double rod	CB-029SA
SCM-F	Round shaped cylinder/ double acting/fine speed	CB-029SA
SCM-LD	Round shaped cylinder/double acting/direct mounting foot	CB-029SA
SCM-M	Round shaped cylinder/ double acting/rotation-stop	CB-029SA
SCM-O	Round shaped cylinder/ double acting/low speed	CB-029SA
SCM-P	Round shaped cylinder/double acting/adjustable stroke/push	CB-029SA
SCM-Q	Round shaped cylinder/ double acting/position locking	CB-029SA
SCM-R	Round shaped cylinder/double acting/adjustable stroke/pull	CB-029SA
SCM-T	Round shaped cylinder/ double acting/heat resistance	CB-029SA
SCM-U	Round shaped cylinder/ double acting/low friction	CB-029SA
SCM-W	Round shaped cylinder/ double acting/two-stage	CB-029SA
SCM-W4	Round shaped cylinder/ double acting/tandem	CB-029SA
SCM-X	Round shaped cylinder/single acting/push	CB-029SA
SCM-Y	Round shaped cylinder/single acting/pull	CB-029SA

■ Listed catalog No.

CB-029SA...Pneumatic Cylinders I CB-024SA ...Pneumatic, Vacuum and Auxiliary Components
CB-030SA...Pneumatic Cylinders II CB-03-1SA ...General Purpose Valves
CB-023SA...Pneumatic Valves

■ Codes (pneumatic valves and general purpose valves)

Ⓓ...Discrete valves Ⓡ...Reduced wiring manifolds
Ⓘ...Individual wiring manifolds Ⓧ...Mix manifolds
Ⓑ...Block manifolds Ⓜ...Manifolds

Model No. [index in alphabetical order]

Model No.	Model	Catalog No./page
S		
SCPD3	Pencil shaped cylinder/ Double acting/single rod	CB-029SA
SCPD3-*C	Pencil shaped cylinder/ Double acting/rubber-air cushioned	CB-029SA
SCPD3-D	Pencil shaped cylinder/ Double acting/double rod	CB-029SA
SCPD3-DT	Pencil shaped cylinder/ Double acting/double rod/heat resistance	CB-029SA
SCPD3-F	Pencil shaped cylinder/ Double acting/fine speed	CB-029SA
SCPD3-K	Pencil shaped cylinder/ Double acting/high load	CB-029SA
SCPD3-M	Pencil shaped cylinder/ Double acting/rotation-stop	CB-029SA
SCPD3-O	Pencil shaped cylinder/ Double acting/low speed	CB-029SA
SCPD3-T	Pencil shaped cylinder/ Double acting/heat resistance	CB-029SA
SCPD3-V	Pencil shaped cylinder/ With valve/double acting	CB-029SA
SCPD3-Z	Pencil shaped cylinder/ Double acting/with speed controller	CB-029SA
SCPH3	Pencil shaped cylinder/ Single acting/pull	CB-029SA
SCPS	Pencil shaped cylinder/ Single acting/push	CB-029SA
SCPS3	Pencil shaped cylinder/ Single acting/push	CB-029SA
SCPS3-M	Pencil shaped cylinder/ Single acting/push/rotation-stop	CB-029SA
SCPS3-V	Pencil shaped cylinder/ With valve/single acting	CB-029SA
SCS2	Large bore size cylinder (large bore size ø125 to 250)/double acting/single rod/lubricating	CB-029SA
SCS2-(N)	Large bore size cylinder (large bore size ø125 to 250)/double acting/single rod/non-lubricating	CB-029SA
SCS2-(N)D	Large bore size cylinder (large bore size ø125 to 250)/double acting/double rod/non-lubricating	CB-029SA
SCS2-B	Large bore size cylinder (large bore size ø125 to 250)/double acting/back to back	CB-029SA
SCS2-D	Large bore size cylinder (large bore size ø125 to 250)/double acting/double rod	CB-029SA
SCS2-G	Large bore size cylinder (large bore size ø125 to 250)/double acting/rubber scraper	CB-029SA
SCS2-H	Large bore size cylinder (large bore size ø125 to 250)/double acting/low hydraulic	CB-029SA
SCS2-P	Large bore size cylinder (large bore size ø125 to 250)/double acting/adjustable stroke	CB-029SA
SCS2-T	Large bore size cylinder (large bore size ø125 to 250)/double acting/heat resistance	CB-029SA
SCS2-W	Large bore size cylinder (large bore size ø125 to 250)/double acting/two-stage	CB-029SA
SD301, 302D	High polymer membrane dryer/single unit	1818
SD301, 302E	High polymer membrane dryer/single unit	1814
SD3015 to 3075	High polymer membrane dryer/single unit	1825
SD401, 402D	High polymer membrane dryer/single unit	1818
SD401, 402E	High polymer membrane dryer/single unit	1814
SD4050 to 4100	High polymer membrane dryer/single unit	1825
SDM4050 to 4100	High polymer membrane dryer/ Super dryer modular series (large)	1828
SFC*	Anti-bacterial/bacteria-removing filter	217
SFS10	Bacteria removing filter/inline	242
SFR/SFRT	Fine speed fan rotary actuator	CB-029SA
SHC	High power cylinder/double acting/double force	CB-030SA
SHC-K	High power cylinder/double acting/quad force	CB-030SA
SHD	Desiccant air dryer/ Medium/large heatless dryer	1796
SHV2	Shuttle valve	794
SKAC	Contact protecting circuit box (for AC circuit)	CB-029SA
SKDC	Contact protecting circuit box (for DC circuit)	CB-029SA
SKH	Shock absorbing valve	CB-023SA
SKL	Shock absorber	CB-030SA
SL	Silencer/metal body	764
SLM	Silencer/miniature	771
SL-M5	Silencer/small bore size	764
SL-W	Silencer/Outdoor Series	774
SLW	Silencer/ Small bore size/resin body	764
SLW-*A-H	Silencer/ High noise reduction/small bore size/resin body	766
SLW-*L	Silencer/ Large flow rate/small bore size/resin body	767
SLW-20S	Silencer/ High noise reduction/compact	769
SLW-6S, 8S	Silencer/ High noise reduction/compact	768
SLW-H*	Silencer/push-in	770

SM-25	Shuttle mover Standard/high load	CB-029SA
SMG	Compact cylinder/double acting/single rod	CB-029SA
SMG-F	Compact cylinder/double acting/fine speed	CB-029SA
SMG-M	Compact cylinder/double acting/rotation-stop	CB-029SA
SMG-X	Compact cylinder/single acting/push	CB-029SA
SMG-Y	Compact cylinder/single acting/pull	CB-029SA
SMW	Metering valve with silencer	762
SMW2	Metering valve with silencer	760
SNP	3-port solenoid valve with spool position detection	206
SNS	Residual pressure exhaust valve with spool position detection	196
SPK	Pilot kick 2-port solenoid valve for steam	CB-03-1SA
SR	Flame-resistant tube	906
SRG3	High precision guided rodless cylinder (single guide)/double acting	CB-029SA
SRL3	Rodless cylinder/double acting	CB-029SA
SRL3-G	Rodless cylinder/double acting/with resin guide	CB-029SA
SRL3-GQ	Rodless cylinder/double acting/with resin guide/with position locking function	CB-029SA
SRL3-Q	Rodless cylinder/double acting/ with position locking function	CB-029SA
SRM3	High precision guided rodless cylinder (double guide)/double acting	CB-029SA
SRM3-Q	High precision guided rodless cylinder (double guide)/double acting/position locking	CB-029SA
SRT3	Rodless cylinder with brake/ double acting	CB-029SA
SSD	Compact cylinder/double acting/single rod	CB-029SA
SSD2	Compact cylinder/double acting/single rod	CB-029SA
SSD2-B	Compact cylinder/double acting/back to back	CB-029SA
SSD2-D	Compact cylinder/double acting/double rod	CB-029SA
SSD2-DG1	Compact cylinder/double acting/double rod/coil scraper	CB-029SA
SSD2-DG4	Compact cylinder/double acting/ double rod/anti-spatter adherence	CB-029SA
SSD2-DM	Compact cylinder/double acting/double rod/rotation-stop	CB-029SA
SSD2-F	Compact cylinder/double acting/fine speed	CB-029SA
SSD2-G	Compact cylinder/double acting/rubber scraper	CB-029SA
SSD2-G1	Compact cylinder/double acting/coil scraper	CB-029SA
SSD2-G1L4	Compact cylinder/double acting/with strong magnetic field proof switch/with coil scraper	CB-029SA
SSD2-G2/G3	Compact cylinder/double acting/coolant proof	CB-029SA
SSD2-G4	Compact cylinder/double acting/anti-spatter adherence	CB-029SA
SSD2-G5	Compact cylinder/double acting/ environment-resistant scraper	CB-029SA
SSD2-K	Compact cylinder/double acting/single rod/high load	CB-029SA
SSD2-K-*C	Compact cylinder/double acting/ high load/rubber-air cushioned	CB-029SA
SSD2-KF	Compact cylinder/double acting/fine speed	CB-029SA
SSD2-KG1	Compact cylinder/double acting/high load/coil scraper	CB-029SA
SSD2-KG1L4	Compact cylinder/double acting/high load/with strong magnetic field proof switch/with coil scraper	CB-029SA
SSD2-KG2/KG3	Compact cylinder/double acting/high load/coolant proof	CB-029SA
SSD2-KG4	Compact cylinder/double acting/ high load/anti-spatter adherence	CB-029SA
SSD2-KG5	Compact cylinder/double acting/high load/environment-resistant scraper	CB-029SA
SSD2-KL4	Compact cylinder/double acting/high load/ with strong magnetic field proof switch	CB-029SA

■ Listed catalog No.

CB-029SA...Pneumatic Cylinders I CB-024SA ...Pneumatic, Vacuum and Auxiliary Components
CB-030SA...Pneumatic Cylinders II CB-03-1SA ...General Purpose Valves
CB-023SA...Pneumatic Valves

■ Codes (pneumatic valves and general purpose valves)

Ⓓ...Discrete valves Ⓡ...Reduced wiring manifolds
Ⓘ...Individual wiring manifolds Ⓧ...Mix manifolds
Ⓑ...Block manifolds Ⓜ...Manifolds

Model No. [index in alphabetical order]

Model No.	Model	Catalog No./page
S		
SSD2-KU	Compact cylinder/double acting/high load/low friction	CB-029SA
SSD2-L	Compact cylinder/double acting/single rod/long stroke	CB-029SA
SSD2-L4	Compact cylinder/double acting/with strong magnetic field proof switch	CB-029SA
SSD2-M	Compact cylinder/double acting/rotation-stop	CB-029SA
SSD2-O	Compact cylinder/double acting/low speed	CB-029SA
SSD2-P7*	Compact cylinder/double acting/clean-room specifications	CB-029SA
SSD2-Q	Compact cylinder/double acting/with position locking	CB-029SA
SSD2-T1	Compact cylinder/double acting/heat resistance	CB-029SA
SSD2-T1L	Compact cylinder/double acting/with heat resistant cylinder switch	CB-029SA
SSD2-W	Compact cylinder/double acting/two-stage	CB-029SA
SSD2-X	Compact cylinder/single acting/push	CB-029SA
SSD2-Y	Compact cylinder/single acting/pull	CB-029SA
SSD-B	Compact cylinder/double acting/back to back	CB-029SA
SSD-D	Compact cylinder/double acting/double rod	CB-029SA
SSD-DG1	Compact cylinder/double acting/double rod/coil scraper	CB-029SA
SSD-DG4	Compact cylinder/double acting/double rod/anti-spatter adherence	CB-029SA
SSD-F	Compact cylinder/double acting/fine speed	CB-029SA
SSD-G1	Compact cylinder/double acting/coil scraper	CB-029SA
SSD-G1L4	Compact cylinder/double acting/with strong magnetic field proof for switch/with coil scraper	CB-029SA
SSD-G2/G3	Compact cylinder/double acting/coolant proof	CB-029SA
SSD-G4	Compact cylinder/double acting/anti-spatter adherence	CB-029SA
SSD-G5	Compact cylinder/double acting/single rod/environment-resistant scraper	CB-029SA
SSD-K	Compact cylinder/double acting/single rod/high load	CB-029SA
SSD-K-*C	Compact cylinder/double acting/high load/rubber-air cushioned	CB-029SA
SSD-KF	Compact cylinder/double acting/high load/fine speed	CB-029SA
SSD-KG1	Compact cylinder/double acting/high load/coil scraper	CB-029SA
SSD-KG1L4	Compact cylinder/double acting/high load/with strong magnetic field proof switch/with coil scraper	CB-029SA
SSD-KG2/KG3	Compact cylinder/double acting/high load/coolant proof	CB-029SA
SSD-KG4	Compact cylinder/double acting/high load/anti-spatter adherence	CB-029SA
SSD-KG5	Compact cylinder/double acting/high load/environment-resistant scraper	CB-029SA
SSD-KL4	Compact cylinder/double acting/high load/with strong magnetic field proof switch	CB-029SA
SSD-K-P12	Compact cylinder/oil-prohibited	CB-029SA
SSD-KU	Compact cylinder/double acting/low friction	CB-029SA
SSD-L4	Compact cylinder/double acting/with strong magnetic field proof switch	CB-029SA
SSD-LN	With length measuring sensor	CB-030SA
SSD-M	Compact cylinder/double acting/rotation-stop	CB-029SA
SSD-O	Compact cylinder/double acting/low speed	CB-029SA
SSD-Q	Compact cylinder/double acting/position locking	CB-029SA
SSD-T	Compact cylinder/double acting/heat resistance	CB-029SA
SSD-T1L	Compact cylinder/double acting/with heat resistant cylinder switch	CB-029SA
SSD-W	Compact cylinder/double acting/two-stage	CB-029SA
SSD-X	Compact cylinder/single acting/push	CB-029SA
SSD-Y	Compact cylinder/single acting/pull	CB-029SA
SSG	Guided super compact cylinder/double acting/single rod	CB-029SA
STA2	Stopper cylinder	CB-029SA
STG	Guided cylinder/Double acting/single rod	CB-030SA

STG-*-*C	Guided cylinder/ Double acting/rubber-air cushioned	CB-030SA
STG-*C	Guided cylinder/ Double acting/air cushioned	CB-030SA
STG-*G	Guided cylinder/ Double acting/rubber scraper	CB-030SA
STG-*G1	Guided cylinder/ Double acting/coil scraper	CB-030SA
STG-*G2/G3	Guided cylinder/ Double acting/coolant proof	CB-030SA
STG-*G4	Guided cylinder/ Double acting/anti-spatter adherence	CB-030SA
STG-*Q	Guided cylinder/ Double acting/position locking	CB-030SA
STG-B-P7*	Guided cylinder/ Double acting/clean-room specifications	CB-030SA
STG-K	Guided cylinder/ Double acting/heavy duty guide rod	CB-030SA
STG-MG5	Guided cylinder/ Double acting/environment-resistant scraper	CB-030SA
STK	Stopper cylinder/ Double acting/round rod end form	CB-029SA
STK-JY	Stopper cylinder/ Single acting/pull/rod end form roller	CB-029SA
STK-JY1	Stopper cylinder/ Double acting/spring integrated/rod end form roller	CB-029SA
STK-M	Stopper cylinder/ Double acting/rod end form chamfered	CB-029SA
STK-MY	Stopper cylinder/Single acting/ pull/rod end form chamfered	CB-029SA
STK-MY1	Stopper cylinder/Double acting/spring integrated/rod end form chamfered	CB-029SA
STK-Y	Stopper cylinder/Single acting/pull/round rod end form	CB-029SA
STK-Y1	Stopper cylinder/Double acting/ spring integrated/round rod end form	CB-029SA
STL-*	Guided cylinder (long stroke)/ double acting/single rod	CB-030SA
STL-*-*C	Guided cylinder (long stroke)/ double acting/rubber-air cushioned	CB-030SA
STL-*C	Guided cylinder (long stroke)/ double acting/air cushioned	CB-030SA
STL-*F	Guided cylinder (long stroke)/ double acting/fine speed	CB-030SA
STL-*G/G1	Guided cylinder (long stroke)/ double acting/scraper	CB-030SA
STL-*G2/G3	Guided cylinder (long stroke)/ double acting/coolant proof	CB-030SA
STL-*G4	Guided cylinder (long stroke)/double acting/anti-spatter adherence	CB-030SA
STL-*O	Guided cylinder (long stroke)/ double acting/low speed	CB-030SA
STL-*P	Guided cylinder (long stroke)/double acting/stroke adjustable/push	CB-030SA
STL-*Q	Guided cylinder (long stroke)/ double acting/position locking	CB-030SA
STL-*T	Guided cylinder (long stroke)/ double acting/heat resistance	CB-030SA
STL-*T2	Guided cylinder (long stroke)/double acting/packing material fluoro rubber	CB-030SA
STL-*V	Guided cylinder (long stroke)/ with valve/double acting	CB-030SA
STM-B-P7*	Guided cylinder/ Double acting/single rod/clean-room specifications	CB-030SA
STM-M/B	Guided cylinder/ Double acting/single rod	CB-030SA
STR2-*	Twin rod cylinder/double acting/single rod	CB-030SA
STR2-*D	Twin rod cylinder/double acting/double rod	CB-030SA
STR2-*F	Twin rod cylinder/double acting/fine speed	CB-030SA
STR2-*O	Twin rod cylinder/double acting/low speed	CB-030SA
STR2-*Q	Twin rod cylinder/double acting/position locking	CB-030SA
STS-*	Guided cylinder (short stroke)/ double acting/single rod	CB-030SA
STS-*-*C	Guided cylinder (short stroke)/ double acting/rubber-air cushioned	CB-030SA

■ Listed catalog No.

CB-029SA...Pneumatic Cylinders I CB-024SA ...Pneumatic, Vacuum and Auxiliary Components
CB-030SA...Pneumatic Cylinders II CB-03-1SA ...General Purpose Valves
CB-023SA...Pneumatic Valves

■ Codes (pneumatic valves and general purpose valves)

Ⓓ...Discrete valves Ⓡ...Reduced wiring manifolds
Ⓘ...Individual wiring manifolds Ⓧ...Mix manifolds
Ⓑ...Block manifolds Ⓜ...Manifolds

Model No. [index in alphabetical order]

Model No.	Model	Catalog No./page
S		
STS-*C	Guided cylinder (short stroke)/double acting/air cushioned	CB-030SA
STS-*F	Guided cylinder (short stroke)/double acting/fine speed	CB-030SA
STS-*G/G1	Guided cylinder (short stroke)/double acting/scraper	CB-030SA
STS-*G2/G3	Guided cylinder (short stroke)/double acting/coolant proof	CB-030SA
STS-*G4	Guided cylinder (short stroke)/double acting/anti-spatter adherence	CB-030SA
STS-*O	Guided cylinder (short stroke)/double acting/low speed	CB-030SA
STS-*P	Guided cylinder (short stroke)/double acting/stroke adjustable/push	CB-030SA
STS-*Q	Guided cylinder (short stroke)/double acting/position locking	CB-030SA
STS-*T	Guided cylinder (short stroke)/double acting/heat resistance	CB-030SA
STS-*T2	Guided cylinder (short stroke)/double acting/packing material fluoro rubber	CB-030SA
STS-*V	Guided cylinder (short stroke)/with valve/double acting	CB-030SA
SU301, 302D	High polymer membrane dryer/unit	1818
SU301, 302E	High polymer membrane dryer/unit	1814
SU3015 to 3075	High polymer membrane dryer/unit	1822
SU401, 402D	High polymer membrane dryer/unit	1818
SU401, 402E	High polymer membrane dryer/unit	1814
SU4050, 4100	High polymer membrane dryer/unit	1822
SUH	Transfer module	CB-029SA
SVB*A	Air operated 2-port valve with solenoid valve for air/gas (cylinder valve)	CB-03-1SA
SVB*S	Air operated 2-port valve with solenoid valve for steam/water/air (cylinder valve)	CB-03-1SA
SVB*V	Air operated 2-port valve with solenoid valve for low vacuum (cylinder valve)	CB-03-1SA
SVB*W	Air operated 2-port valve with solenoid valve for water/liquid (cylinder valve)	CB-03-1SA
SWD	Weir diaphragm valve	CB-03-1SA
T		
T0V/H/C	Cylinder switch/1-color LED/2-wire reed	CB-029SA
T1 V/H	Cylinder switch/1-color LED, proximity 2-wire	CB-029SA
T2 V/H R	Cylinder switch/Bend resistance lead wire/2-wire proximity sensor	CB-029SA
T2, 3 V/H/C	Cylinder switch/1-color LED, 2, 3-wire proximity	CB-029SA
T2, 3Y(W)V/H	Cylinder switch/2-color LED, 2, 3-wire proximity	CB-029SA
T2, 3YL V/H	Cylinder switch/Coolant proof/2, 3-wire proximity sensor	CB-029SA
T2J V/H	Cylinder switch/Off-delay/2-wire proximity sensor	CB-029SA
T2YD(T)	Cylinder switch/Strong magnetic field proof/proximity 2-wire	CB-029SA
T3P V/H	Cylinder switch/PNP output/3-wire proximity sensor	CB-029SA
T5V/H/C	Cylinder switch/Without display/reed 2-wire	CB-029SA
T8 V/H	Cylinder switch/1-color LED/2-wire reed	CB-029SA
TAC-25	Medium pressure gas shut off control system	CB-03-1SA
TLPS	Cutting tool breakage detection switch/single unit	1290
U		
U	Urethane tube	906
UCA2	Unit cylinder/Double acting/single rod/metal bush bearing	CB-030SA
UCA2-B	Unit cylinder/Double acting/single rod/ball bearing	CB-030SA
UCAC2	Position locking clamp cylinder/double acting/single rod	CB-030SA
UCAC-N32/40	Lightweight clamp cylinder/Position locking/double acting/single rod	CB-030SA
UFCD	Free position locking flat cylinder/double acting/single rod	CB-030SA
UGPS2	Contact confirmation switch/unit	1270
UGPS3	Digital gap switch/unit	1243
UHPS	Close contact confirmation switch/unit	1284
ULK	Brake cylinder/Double acting/single rod	CB-030SA
ULKP	Brake cylinder/Double acting/single rod (ø16)	CB-030SA
ULK-V	Brake cylinder/With valve/double acting	CB-030SA
UMB1	High corrosion resistant miniature direct acting 2-port solenoid valve for medical equipment	CB-03-1SA

UMG1	High corrosion resistant miniature direct acting 3-port solenoid valve for medical equipment	CB-03-1SA
UP	Antistatic fiber tube (for push-in fitting)	884
UP--F1/F2**	Antistatic tube	877
UP-9102-20-*-F1	Antistatic fiber tube	877
UP-9102-SR	Flame-resistant fiber tube (For push-in fitting)	898
US	Compact direct acting 2, 3-port solenoid valve (resin body)	CB-03-1SA
USB2	Compact direct acting 2-port solenoid valve	CB-03-1SA
USB3	Compact direct acting 2-port solenoid valve	CB-03-1SA
USC	Free position locking medium bore size cylinder/double acting/single rod	CB-030SA
USC-G1	Free position locking medium bore size cylinder/double acting/with coil scraper	CB-030SA
USG2	Compact direct acting 3-port solenoid valve	CB-03-1SA
USG3	Compact direct acting 3-port solenoid valve	CB-03-1SA
USSD	Position locking compact cylinder/double acting/single rod	CB-030SA
USSD-K	Position locking compact cylinder/ double acting/single rod/high load	CB-030SA
UTLPS	Cutting tool breakage detection switch/unit	1298

V

V0	Cylinder switch/ Compact strong magnetic field proof/reed 2-wire	CB-029SA
V1000, 3000-W	Residual pressure exhaust valve Standard White Series	182
V3010, 6010-W	Residual pressure exhaust valve with keyhole With keyhole, OSHA compliant	185
V3301, 3321-W	Slow start valve	214
VFA1000 to 4000	Vacuum filter	530
VG41D	Vacuum pressure gauge with limit marker	376
VLA	Solenoid valve for gas combustion system	CB-03-1SA
VLM	Medium pressure gas safety cutoff control system	CB-03-1SA
VNA	Solenoid valve for gas combustion system	CB-03-1SA
VNA-R/RH	Solenoid valve for gas combustion system	CB-03-1SA
VNM	Medium pressure gas safety cutoff control system	CB-03-1SA
VNM-25-K	Safety residual pressure exhaust valve (increased fire safety specifications)	CB-03-1SA
VNR	Solenoid valve for gas combustion system NO (closed when energized)	CB-03-1SA
VRA2000	Vacuum regulator	536

W

W1000 to 8000-P6	Filter/regulator/ Copper and PTFE free Series	313
W1000 to 8000-W	Filter/regulator/ Standard White Series	90
W1100 to 8100-P6	Reverse filter/regulator/ Copper and PTFE free Series	314
W1100 to 8100-W	Reverse filter/regulator/ Standard White Series	98
W2P513*	Ⓓ Pilot operated 5-port valve/ double	CB-023SA
W3000 to 8000-G4	Filter/regulator/ Flame-resistant Series	252
W3100 to 8100-G4	Reverse filter/regulator/ Flame-resistant Series	258
W4GB2	Ⓓ Pilot operated 3, 5-port valve/base piping	CB-023SA
W4GB4	Ⓓ Pilot operated 5-port valve/ base side piping	CB-023SA
W4GZ4	Ⓓ Pilot operated 5-port valve/ base bottom piping	CB-023SA
WB500	Compact filter/regulator	388
WFC	Capacitance electromagnetic flow sensor	1574
WFK2	Karman vortex flow rate sensor for water	1556
WFK3000	Karman vortex flow rate sensor for water, compact/device built-in	1588
WR1/2	Regulator for water	430
WW4000, 8000	Filter/regulator Outdoor Series	324
WXU	Integrated unit for water control	CB-03-1SA

Y

YS	Y shaped strainer	CB-03-1SA

■ Listed catalog No.

CB-029SA...Pneumatic Cylinders I CB-024SA ...Pneumatic, Vacuum and Auxiliary Components
CB-030SA...Pneumatic Cylinders II CB-03-1SA ...General Purpose Valves
CB-023SA...Pneumatic Valves

■ Codes (pneumatic valves and general purpose valves)

Ⓓ...Discrete valves Ⓡ...Reduced wiring manifolds
Ⓘ...Individual wiring manifolds Ⓧ...Mix manifolds
Ⓑ...Block manifolds Ⓜ...Manifolds

Model No. [index in alphabetical order]

Model No.	Model	Catalog No./page
Z		
ZB4-B	Switch head	1661
ZCK	Rotary head lever actuator	1667
ZJ-L*	Tightening fitting (stainless steel)/elbow	857
ZJ-N*	Tightening fitting (stainless steel)/sleeve integrated with nut	857
ZJ-S*	Tightening fitting (stainless steel)/straight	857
ZJ-T*	Tightening fitting (stainless steel)/tee	857
ZSP	Fitting (stainless steel)	848
ZW-L*	Fitting (stainless steel)/elbow	844
ZW-S*	Fitting (stainless steel)/ straight	844
ZW-T*	Fitting (stainless steel)/tee	844

■ Listed catalog No.

CB-029SA...Pneumatic Cylinders I
CB-030SA...Pneumatic Cylinders II
CB-023SA...Pneumatic Valves
CB-024SA ...Pneumatic, Vacuum and Auxiliary Components
CB-03-1SA...General Purpose Valves

■ Codes (pneumatic valves and general purpose valves)

Ⓓ...Discrete valves
Ⓘ...Individual wiring manifolds
Ⓑ...Block manifolds
Ⓡ...Reduced wiring manifolds
Ⓧ...Mix manifolds
Ⓜ...Manifolds

Pneumatic, Vacuum and Auxiliary Components ——— Catalog No. CB-024SA9

Date of issue October 14, 1996 1st edition
January 31, 2017 9th edition
February 17, 2021 9th edition Ver. 2
September 29, 2021 9th edition Ver. 2.2

Place of issue **CKD Corporation**
2-250 Ouji, Komaki City, Aichi 485-8551, Japan
https://www.ckd.co.jp/en/

Fixed price 1,000 yen (tax not included)

© **CKD Corporation** 2022 Printed in Japan
Unauthorized copying prohibited
The specifications and appearances listed in this catalog may change without prior notice in order for improvements to be made.

VEGETABLE OIL INK This catalog has been printed with environmentally friendly “vegetable oil ink”.

CKD WARRANTY

Subject to the conditions below, CKD Corporation ("CKD") warrants the first end user (the "Buyer") that CKD's products are free from defects in material and workmanship.

"Warranty Period" is one (1) year from the first delivery to the customer.

CKD will, at CKD's option, either repair or replace a defective product, including lowest transportation costs but not including installation or any other similar charges, provided that the buyer (1) notifies CKD in writing of the claimed defect within one year from the date Buyer received the product, (2) provides a complete explanation of the defect, the application of the product, and such other information concerning use of the product as CKD may request, and (3) returns the product to CKD in accordance with CKD's specific written instructions and authorization obtained from CKD prior to return of the product, and CKD's inspection confirms that the product was defective.

This warranty applies only if the product was used and applied correctly under normal operating conditions and good engineering practice; was installed, operated and maintained in accordance with all instructions issued or published by CKD; was used within stated pressure, media and operating limitations published by CKD and in effect on the date of shipment; and was not subject to abuse, misuse or unauthorized modification.

THIS WARRANTY IS THE ONLY AUTHORIZED CKD WARRANTY AND IN LIEU OF ALL OTHER WARRANTIES, EXPRESSED OR IMPLIED, INCLUDING ANY IMPILIED WARRANTY OF MERCHANTABILITY OR FITNESS FOR A PARTICULAR PURPOSE, notwithstanding any disclosure to CKD of the use to which the product is to be put. The Buyer's **SOLE AND EXCLUSIVE REMEDY** on any claim of any kind for any loss or damage arising out of the manufacture, sale, delivery or use of CKD's products shall be for the repair or replacement of any defective products as provided herein.

IN NO EVENT SHALL CKD BE LIABLE FOR BUSINESS INTERRUPTIONS, LOSS OF PROFITS, PERSONAL INJURY, COSTS OF DELAY OR FOR ANY OTHER SPECIAL, INDIRECT, INCIDENTAL OR CONSEQUENTIAL LOSSES, COSTS OR DAMAGES. There are no warranties, expressed or implied, made by CKD other than the warranty against defects in material and workmanship set forth above, and CKD neither assumes nor authorizes any other person or firm to assume for it any other obligations or liability.

CKD shall not be liable for any trouble, malfunction and damages of CKD products caused, directly or indirectly, by disaster or any other causes not attributable to CKD’s responsibility. CKD also shall not be responsible for any trouble, malfunction and damages of CKD products caused by the lack or malfunction of safety circuit or structure or function that should be commonly equipped in the Buyer's equipment in which the CKD products were used.

CKD MAINTAINS A POLICY OF ONGOING PRODUCT DEVELOPMENT AND INPROVEMENT. WE THEREFORE RESERVE THE RIGHT TO CHANGE DIMENSIONS, SPECIFICATIONS AND DESIGN WITHOUT NOTICE.

WORLD-NETWORK

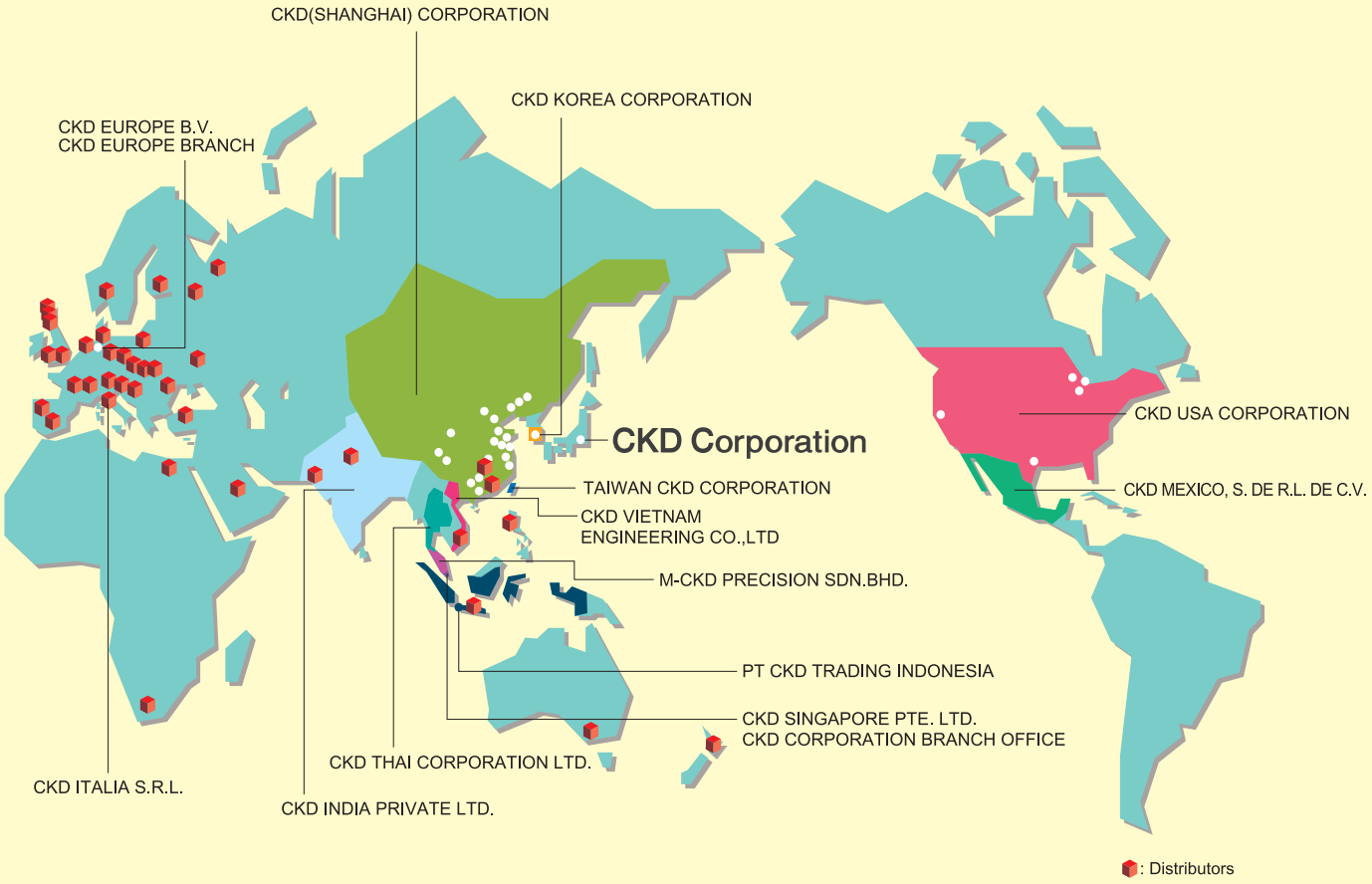

CKD Corporation

Website https://www.ckd.co.jp/en/

□ 2-250 Ouji, Komaki City, Aichi 485-8551, Japan
□ PHONE +81-568-74-1338 FAX +81-568-74-1165

ASIA

喜開理(上海)機器有限公司
CKD(SHANGHAI)CORPORATION

- 営業部/上海浦西事務所(SALES HEADQUARTERS / SHANGHAI PUXI OFFICE)
  Room 612, 6th Floor, Yuanzhongkeyan Building, No. 1905 Hongmei Road, Xuhui District, Shanghai 200233, China
  PHONE +86-21-60906046 FAX +86-21-60906046
- 上海浦東事務所(SHANGHAI PUDONG OFFICE)
- 寧波事務所(NINGBO OFFICE)
- 杭州事務所(HANGZHOU OFFICE)
- 無錫事務所(WUXI OFFICE)
- 昆山事務所(KUNSHAN OFFICE)
- 蘇州事務所(SUZHOU OFFICE)
- 南京事務所(NANJING OFFICE)
- 合肥事務所(HEFEI OFFICE)
- 成都事務所(CHENGDU OFFICE)
- 武漢事務所(WUHAN OFFICE)
- 鄭州事務所(ZHENGZHOU OFFICE)
- 長沙事務所(CHANGSHA OFFICE)
- 重慶事務所(CHONGQING OFFICE)
- 西安事務所(XIAN OFFICE)
- 広州事務所(GUANGZHOU OFFICE)
- 中山事務所(ZHONGSHAN OFFICE)
- 深圳西事務所(WEST SHENZHEN OFFICE)
- 深圳東事務所(EAST SHENZHEN OFFICE)
- 東莞事務所(DONGGUAN OFFICE)
- 厦門事務所(XIAMEN OFFICE)
- 福州事務所(FUZHOU OFFICE)
- 瀋陽事務所(SHENYANG OFFICE)
- 大連事務所(DALIAN OFFICE)
- 長春事務所(CHANGCHUN OFFICE)
- 北京事務所(BEIJING OFFICE)
- 天津事務所(TIANJIN OFFICE)
- 青島事務所(QINGDAO OFFICE)
- 潍坊事務所(WEIFANG OFFICE)
- 済南事務所(JINAN OFFICE)
- 烟台事務所(YANTAI OFFICE)

CKD INDIA PRIVATE LTD.

- HEADQUARTERS
  Unit No. 607, 6th Floor, Welldone Tech Park, Sector 48, Sohna Road, Gurgaon-122018, Haryana, India
  PHONE +91-124-418-8212
- BANGALORE OFFICE
- PUNE OFFICE
- CHENNAI OFFICE
- MUMBAI OFFICE
- HYDERABAD OFFICE

PT CKD TRADING INDONESIA

- HEAD OFFICE
  Menara Bidakara 2, 18th Floor, Jl. Jend. Gatot Subroto Kav. 71-73, Pancoran, Jakarta 12870, Indonesia
  PHONE +62-21-2938-6601 FAX +62-21-2906-9470
- MEDAN OFFICE
- BEKASI OFFICE
- KARAWANG OFFICE
- SEMARANG OFFICE
- SURABAYA OFFICE

CKD KOREA CORPORATION

- HEADQUARTERS
  (3rd Floor), 44, Sinsu-ro, Mapo-gu, Seoul 04088, Korea
  PHONE +82-2-783-5201～5203 FAX +82-2-783-5204
- 水原営業所(SUWON OFFICE)
- 天安営業所(CHEONAN OFFICE)
- 蔚山営業所(ULSAN OFFICE)

M-CKD PRECISION SDN.BHD.

- HEAD OFFICE
  Lot No.6,Jalan Modal 23/2, Seksyen 23, Kawasan MIEL, Fasa 8, 40300 Shah Alam,Selangor Darul Ehsan, Malaysia
  PHONE +60-3-5541-1468 FAX +60-3-5541-1533
- JOHOR BAHRU BRANCH OFFICE
- PENANG BRANCH OFFICE

CKD SINGAPORE PTE. LTD.

No.33 Tannery Lane #04-01 Hoesteel Industrial Building, Singapore 347789, Singapore
PHONE +65-67442623 FAX +65-67442486

CKD CORPORATION BRANCH OFFICE

No.33 Tannery Lane #04-01 Hoesteel Industrial Building, Singapore 347789, Singapore
PHONE +65-67447260 FAX +65-68421022

CKD THAI CORPORATION LTD.

- HEADQUARTERS
  19th Floor, Smooth Life Tower, 44 North Sathorn Road, Silom, Bangrak, Bangkok 10500, Thailand
  PHONE +66-2-267-6300 FAX +66-2-267-6304-5
- NAVANAKORN OFFICE
- EASTERN SEABOARD OFFICE
- LAMPHUN OFFICE
- KORAT OFFICE
- AMATANAKORN OFFICE
- PRACHINBURI OFFICE
- SARABURI OFFICE

台湾喜開理股份有限公司
TAIWAN CKD CORPORATION

- HEADQUARTERS
  16F-3, No. 7, Sec. 3, New Taipei Blvd., Xinzhuang Dist., New Taipei City 242, Taiwan
  PHONE +886-2-8522-8198 FAX +886-2-8522-8128
- 新竹営業所(HSINCHU OFFICE)
- 台中営業所(TAICHUNG OFFICE)
- 台南営業所(TAINAN OFFICE)
- 高雄営業所(KAOHSIUNG OFFICE)

CKD VIETNAM ENGINEERING CO.,LTD.

- HEADQUARTERS
  18th Floor, CMC Tower, Duy Tan Street, Cau Giay District, Hanoi, Vietnam
  PHONE +84-24-3795-7631 FAX +84-24-3795-7637
- HO CHI MINH OFFICE

EUROPE

CKD EUROPE B.V.

- HEADQUARTERS
  Beechavenue 125A, 1119 RB Schiphol-Rijk, the Netherlands
  PHONE +31-23-554-1490
- CKD EUROPE GERMANY OFFICE
- CKD EUROPE UK
- CKD EUROPE CZECH O.Z.

CKD CORPORATION EUROPE BRANCH

Beechavenue 125A, 1119 RB Schiphol-Rijk, the Netherlands
PHONE +31-23-554-1490

CKD ITALIA S.R.L.

Via di Fibbiana 15 Calenzano (FI) CAP 50041, Italy
PHONE +39 0558825359 FAX +39 0558827376

NORTH AMERICA & LATIN AMERICA

CKD MEXICO, S. DE R.L. DE C.V.

Cerrada la Noria No. 200 Int. A-01, Querétaro Park II, Parque Industrial Querétaro, Santa Rosa Jáuregui, Querétaro, C.P. 76220, México
PHONE +52-442-161-0624

CKD USA CORPORATION

- HEADQUARTERS
  1605 Penny Lane, Schaumburg, IL 60173, USA
  PHONE +1-847-648-4400 FAX +1-847-565-4923
- LEXINGTON OFFICE
- SAN ANTONIO OFFICE
- SAN JOSE OFFICE/ TECHNICAL CENTER
- DETROIT OFFICE
- BOSTON OFFICE

CKD Corporation

https://www.ckd.co.jp/en/

2-250 Ouji, Komaki City,
Aichi 485-8551, Japan